CHAPTER 6

WATER QUALITY DESIGN

KING COUNTY, WASHINGTON
SURFACE WATER DESIGN MANUAL

Section 6.1	**Water Quality Menus**	**6-3**
Section 6.1.1	Basic Water Quality Menu	6-4
Section 6.1.2	Enhanced Basic Water Quality Menu	6-7
Section 6.1.3	Sensitive Lake Protection Menu	6-9
Section 6.1.4	Sphagnum Bog Protection Menu	6-13
Section 6.1.5	High-Use Menu	6-15
Section 6.2	**General Requirements for WQ Facilities**	**6-17**
Section 6.2.1	Water Quality Design Flows and Treatment Volumes	6-17
Section 6.2.2	Sequence of Facilities	6-20
Section 6.2.3	Setbacks, Slopes, and Embankments	6-23
Section 6.2.4	Facility Liners	6-27
Section 6.2.5	Flow Splitter Designs	6-32
Section 6.2.6	Flow Spreading Options	6-36
Section 6.3	**Vegetated Flowpath Facility Designs**	**6-41**
Section 6.3.1	Basic Bioswales	6-41
Section 6.3.2	Wet Bioswales	6-57
Section 6.3.3	Lateral Inflow Bioswales	6-60
Section 6.3.4	Standard Filter Strips	6-61
Section 6.3.5	Narrow Area Filter Strips	6-68
Section 6.4	**Wetpool Facility Designs**	**6-71**
Section 6.4.1	Wetponds — Basic and Large	6-71
Section 6.4.2	Wetvaults	6-86
Section 6.4.3	Stormwater Wetlands	6-92
Section 6.4.4	Combined Detention and Wetpool Facilities	6-98
Section 6.5	**Filtration Facility Designs**	**6-105**
Section 6.5.1	General Requirements For Filtration Facilities	6-105
Section 6.5.2	Sand Filters — Basic and Large	6-106
Section 6.5.3	Sand Filter Vaults	6-123
Section 6.5.4	Linear Sand Filters	6-128
Section 6.6	**Oil Control Facility Designs**	**6-133**
Section 6.6.1	Catch Basin Inserts	6-133
Section 6.6.2	Oil/Water Separators	6-140
Section 6.7	**Proprietary Facility Designs**	**6-153**
Section 6.7.1	Ecology Requirements	6-153
Section 6.7.2	King County Requirements	6-154

CHAPTER 6

WATER QUALITY DESIGN

This chapter presents the King County approved methods, criteria, and details for analysis and design of water quality facilities pursuant to Core Requirement #8, discussed in Section 1.2.8, and Special Requirement #5, discussed in Section 1.3.5.

Chapter Organization

The information in this chapter is organized into the following seven main sections.

- Section 6.1, "**Water Quality Menus**" (p. 6-3), details the **area-specific water quality menus** referred to in Core Requirement #8 of Chapter 1, and the **High-Use Menu** referred to in Special Requirement #5, also in Chapter 1.
- Section 6.2, "**General Requirements for WQ Facilities**" (p. 6-17), presents general design requirements and details pertinent to all water quality facilities.
- Section 6.3, "**Vegetated Flowpath Facility Designs**" (p. 6-41), presents the details for analysis and design of **bioswales** and **filter strips**.
- Section 6.4, "**Wetpool Facility Designs**" (p. 6-71), presents the details for analysis and design of **wetponds**, **wetvaults**, **stormwater wetlands**, and combinations of these facilities with detention facilities.
- Section 6.5, "**Filtration Facility Designs**" (p. 6-105), presents the details for analysis and design of **sand filters**.
- Section 6.6, "**Oil Control Facility Designs**" (p. 6-133), presents the details for analysis and design of **catch basin inserts** and coalescing-plate **oil/water separators**.
- Section 6.7, "**Proprietary Facility Designs**" (p. 6-153), discusses general considerations for proprietary manufactured facilities, including summary notes regarding County requirements for approval for use of these systems. This section points to Reference 14-A, which is reserved for applicability and design considerations for those proprietary facilities which have been granted blanket adjustments after meeting the County's criteria. Reference 14-B is reserved for public domain facilities approved between SWDM publication cycles.

Required vs. Recommended Design Criteria

Both required and recommended design criteria are presented in this chapter. Criteria stated using "shall" or "must" are mandatory, to be used unless there is a good reason to deviate as allowed under the adjustment process in Section 1.4. These criteria are **required design criteria** and generally affect facility performance or critical maintenance factors.

Sometimes options are stated as part of the required design criteria using the language "should" or "may." These latter criteria are really **recommended design criteria**, but are so closely related to the required criteria that they are placed with it. In some cases **recommended design features** are presented under a separate heading in the "Design Criteria" sections.

Design Criteria Applicable To All Facilities

All facilities must be designed and constructed to allow inspection and maintenance.

Use of Chapter 6 Figures: The figures provided in Chapter 6 each illustrate **one example** of how the WQ facility design criteria may be applied. Although the figures are meant to illustrate many of the most important design criteria, they may not show **all** criteria that apply. Narrative text and dimensions in the main body of text in the Manual and differing from drawings take precedence over any text and dimensions in the drawings. Where the main body of text in the manual is silent regarding any aspect of design that is given in a drawing, those elements in the drawing become de facto design standards unless superseded by updates, errata-fixes, or clarifications posted at King County's Surface Water Design Manual web site[1].

Water Quality Facility Sizing Worksheets

To make the water quality facility sizing methods more standardized for plan review purposes, sizing worksheets are included in Reference Section 8-C for the major water quality facilities. These worksheets are based on the step by step sizing methods given for the water quality facilities in this Chapter. Most design criteria that are not required for facility sizing are omitted from the worksheets. It is the designer's responsibility to make sure that all the required design criteria for each water quality facility are provided on submitted plans. Facility sizing credits for water quality facilities may be used as allowed and specified in Chapter 1, Section 1.2.9.3 “Requirements for Use of BMP Credits”.

Please note that the worksheets are dated in the footer of each page. It is the designer's responsibility to ensure that any Manual updates affecting the sizing procedure or design criteria after that date are incorporated into the worksheet. Updates, errata, and clarifications are posted at King County's Surface Water Design Manual web site.

If there are instances in which the worksheet differs from the Design criteria in the text of this Chapter, the criteria as given in this Chapter, and as modified by subsequent updates, shall be considered the governing criteria.

[1] kingcounty.gov/swdm/2021

6.1 WATER QUALITY MENUS

This section identifies facility choices and, in some cases, non-structural options that comprise the water quality (WQ) menus referred to in Chapter 1. The menus covered in this section are as follows:

- "Basic Water Quality Menu," Section 6.1.1 (p. 6-4)
- "Enhanced Basic Water Quality Menu," Section 6.1.2 (p. 6-7)
- "Sensitive Lake Protection Menu," Section 6.1.3 (p. 6-9)
- "Sphagnum Bog Protection Menu," Section 6.1.4 (p. 6-13)
- "High-Use Menu," Section 6.1.5 (p. 6-15).

Guide to Applying Water Quality Menus

1. Determine the WQ treatment area in which your project is located by consulting the Water Quality (WQ) Applications map adopted with this manual and found online at kingcounty.gov/swdm/2021 or viewed via King County's iMap Interactive Mapping Tool at kingcounty.gov/services/gis/Maps/imap. The map also lists some of the inventoried sphagnum bog wetlands using the numbering convention of the King County wetlands inventory.
2. Read Core Requirement #8 to determine if any exemptions apply to your project.
3. If the map indicates your project is within a Sensitive Lake WQ Treatment Area or a Sphagnum Bog WQ Treatment Area and no exemptions apply, determine if the ***project site*** will actually drain to the sensitive lake or bog. For instance, projects near drainage boundaries, especially in areas with underground storm drains, may drain in a direction different from the surface topography. If the ***project site*** does not drain to the sensitive lake or bog, it is located within the Basic WQ Treatment Area.
4. Check the detailed threshold and exceptions information in Section 1.2.8.1 to determine which WQ menu applies to all or part of your project. On some ***sites***, more than one menu may apply depending on proposed land cover, soil characteristics, and how runoff from developed surfaces will be collected.
5. Find the WQ menu in this section that applies to your project. Each menu presents two or more water quality treatment options; **select one**. Since all options are sized to provide equivalent removal of the target pollutant, the choice will depend only on the constraints and opportunities of your ***site***. (If detention requirements apply, it will usually be most economical to use the combined WQ/detention pond option). Detailed facility designs for the option selected are given in Sections 6.3 (p. 6-41), 6.4 (p. 6-71), and 6.5 (p. 6-105). Information about non-structural options is included in the menu itself.
6. Read the implementation requirements in Chapter 1 (Section 1.2.8.2) that address pollution-generating pervious surfaces. For some WQ menus, and in some situations, the facility requirements for these surfaces are eased.
7. Determine if your project fits the definition of a ***high-use site*** (see Special Requirement #5 in Chapter 1). If it does, or if you elect to provide enhanced oil pollution control, choose one of the options presented in the High-Use menu, Section 6.1.5. Detailed designs for oil control facilities are given in Section 6.6 (p. 6-133).
8. General water quality facility requirements (see Section 6.2, p. 6-17) apply to all menus and may affect the placement of facilities on your ***site***.

6.1.1 BASIC WATER QUALITY MENU

Where applied: The Basic Water Quality *menu* is generally applied to areas outside the drainage basin of sensitive lakes, sphagnum bog wetlands, and for land uses not requiring Enhanced Basic treatment. For precise details on the application of this and other water quality menus, refer to Section 1.2.8, "Core Requirement #8: Water Quality Facilities".

Treatment goal: The Basic Water Quality menu facility choices are designed to remove 80 percent of total suspended solids[2] (TSS) for flows or volumes up to and including the WQ design flow or volume (defined in Section 6.2.1, p. 6-17). Flows and volumes in excess of the WQ design flow or volume may be routed around the WQ facility or may be passed through untreated.

Basis:

"The use of TSS as an "indicator" pollutant for sediment is well established".[3]

"The control of TSS leads to indirect control of other pollutants of concern that can adhere to suspended solids in stormwater runoff."[3]

"80% TSS removal level is reasonably attainable using properly designed, constructed and maintained structural stormwater BMPs (for typical ranges of TSS concentration found in stormwater runoff)". [3]

For higher removal rates, there are diminishing returns, and relatively less treatment is gained for incremental increases in facility size.

WA Ecology's TAPE[4] guidance finds 80% removal to be achievable by and a suitable criterion for proprietary 'emerging' technologies.

❑ BASIC WQ OPTION 1 — BIOSWALE

A *bioswale* is a long, gently sloped, vegetated ditch designed to settle out pollutants from stormwater. Grass is the most common vegetation used. Design details are given in Section 6.3.1 (p. 6-41). The wet bioswale (see Section 6.3.2, p. 6-57) is a variation of the basic bioswale for use where soils drain poorly, the longitudinal slope is slight (1.5 percent or less), water tables are high, or continuous base flow is likely to result in saturated soil conditions. Under such conditions, healthy grass growth is not possible and wetland plants are used instead. The lateral inflow bioswale (see Section 6.3.3, p. 6-60) may be used in situations such as roadways and parking lots where water enters the swale along the side rather than at one discrete inflow point at the head of the swale. Table 6.1.1.A summarizes when the bioswale and its variations are to be applied.

---

[2] The influent concentration range for demonstrated pollutant removal is 100 to 200 mg/L. For influent concentrations lower than 100mg/l the effluent goal is equal to or less than 20 mg/l. For influent concentrations greater than 200 mg/l, the goal is greater than 80% TSS removal.

[3] Source: Knox County Tennessee Stormwater Management Manual, Volume 2, Technical Guidance. Date unknown. Accessed 2014/02/14.

[4] Ecology, WA. 2018. Technical Guidance Manual for Evaluating Emerging Stormwater Treatment Technologies: Technology Assessment Protocol – Ecology (TAPE). In Publication No. 18-10-038, 105 pp. Washington State Department of Ecology, Lacey, WA. https://apps.ecology.wa.gov/publications/SummaryPages/1810038.html; also see also see summary update guidance at https://ecology.wa.gov/Regulations-Permits/Guidance-technical-assistance/Stormwater-permittee-guidance-resources/Emerging-stormwater-treatment-technologies#update

❑ BASIC WQ OPTION 2 — FILTER STRIP

A *filter strip* is a gently sloped grassed area which treats stormwater runoff from adjacent paved areas before it concentrates into discrete channels; see Section 6.3.4 (p. 6-61) for design details. TSS removal is achieved by particle settling. The narrow area filter strip may be used along a roadway or parking lot in limited space situations as specified in Section 6.3.5 (p. 6-68).

❑ BASIC WQ OPTION 3 — WETPOND

Wetponds are stormwater ponds that maintain a pool of water for most of the year. Stormwater entering the pond is treated during the relatively long residence time within the pond. Wetpond volume described in Section 6.2.1 for the Basic treatment menu is determined directly by the approved continuous runoff model. Alternatively, the manual sizing method provided for use in this manual calculates the wetpond volume based on a method developed by the Natural Resources Conservation Service (NRCS, formerly the Soil Conservation Service (SCS)). See Section 6.4.1 (p. 6-71) for design details.

❑ BASIC WQ OPTION 4 — WETVAULT

An underground vault may be used to comply with the Basic Water Quality menu. The treatment volume is the same as for the basic wetpond; see Section 6.4.2 (p. 6-86) for design details.

❑ BASIC WQ OPTION 5 — STORMWATER WETLAND

A *stormwater wetland* uses biological processes of plant uptake and bacterial degradation as well as physical and chemical processes, e.g. stilling, and gravity settling to remove pollutants. The footprint of the stormwater wetland is sized based on the wetpond sizing, but the depth of water in the second cell is reduced to encourage plant growth; see Section 6.4.3 (p. 6-92) for design details.

❑ BASIC WQ OPTION 6 — COMBINED DETENTION AND WETPOOL FACILITIES

This option allows the wetpond, wetvault, or stormwater wetland to be placed under the detention facility live storage. Where ***site*** conditions permit its use, this option occupies less space than separate siting of detention and water quality facilities. The basic wetpond portion of the combined facility is sized using the same method as the wetpond in Option 3; see Section 6.4.4 (p. 6-98) for design details.

❑ BASIC WQ OPTION 7 — SAND FILTER

A *sand filter* is a land depression, pond, or vault, with a bed of sand near the bottom. Stormwater is treated as it percolates downward through the sand layer. Removal efficiency for sand filters is much less sensitive to particle density distribution as compared to that of particle settling facilities (e.g. ponds, vaults, bioswales), which include an assumption that the particle density is close to that of silica sand.

Sand filters may be built as open ponds, underground vaults or linear perimeter trenches; see Section 6.5.2 (p. 6-106) for basic and large sand filters, Section 6.5.3 (p. 6-123) for sand filter vaults, and Section 6.5.4 (p. 6-128) for linear sand filters. A sand layer may also be installed above an infiltration pond or vault to treat stormwater before it infiltrates. *Note: Presettling is required prior to sand filtration as described in Section 6.5.1.*

❑ BASIC WQ OPTION 8 — PROPRIETARY MEDIA AND MEMBRANE FILTERS

Most proprietary filters for basic treatment are cartridge filters, although there are some media filter designs that do not involve cartridges. A cartridge filter system is a flow-through stormwater filtration system comprised of a manhole or vault that houses one or more media-filled or porous membrane cartridges through which stormwater is filtered. *Note: a presettling cell or facility is required for both cartridge filters and for non-cartridge media filters.*

Currently, StormFilter™ systems with ZPG™ (zeolite/perlite/granular activated carbon) is the only proprietary facility approved by King County DNRP for meeting the Basic water quality treatment requirements. Additional proprietary facilities approved subsequent to publication of the SWDM will be found in Reference 14-A. Section 1.4 of Chapter 1 and Reference 8 provide relevant information on the process necessary to obtain approvals of other proprietary media and membrane filters.

TABLE 6.1.1.A SELECTION OF BIOSWALE TYPE APPROPRIATE FOR SITE

Site Circumstances	Bioswale Type
Flow enters at head of swale • Longitudinal slope 1.5% or less OR • Located downstream of a Level 2 or 3 detention facility	Wet bioswale (Section 6.3.2, p. 6-57)
Flow enters at head of swale • Longitudinal slope between 1 and 2% • Soil saturation or base flows likely in wet season	EITHER wet bioswale (Section 6.3.2), OR basic bioswale (Section 6.3.1, p. 6-41), depending on site; may require underdrain or low-flow drain.
Flow enters at head of swale • Longitudinal slope between 2% and 5% • Base flows may or may not be likely in wet season • Not downstream of Level 2 or 3 detention.	Basic bioswale (Section 6.3.1, p. 6-41); may require low-flow drain, depending on site
Along a roadway or parking lot with: • Sheet inflow into the bioswale, OR • Numerous discrete inflows with no single inflow contributing more than about 10% of total swale flow.	Lateral inflow bioswale (Section 6.3.3, p. 6-60)

6.1.2 ENHANCED BASIC WATER QUALITY MENU

Where applied: The Enhanced Basic Water Quality menu[5] is applied where an enhanced level of treatment is required for those development ***sites*** with land uses that generate the highest concentrations of metals in stormwater runoff and drain by surface flows to a fish-bearing stream. Metals including but not limited to copper and zinc are toxic to fish and other aquatic biota[6]. For precise details on the application of this and other water quality menus, refer to Section 1.2.8, "Core Requirement #8: Water Quality Facilities."

Note: The Enhanced Basic menu is a stand-alone menu. It integrates the Basic menu level of protection (TSS removal) and the additional measures needed to achieve a higher level of metals removal. When this menu is required in Basic WQ Treatment Areas per Section 1.2.8.1.A of Core Requirement #8, it is intended to replace the Basic WQ menu on development ***sites*** *or portions of development* ***sites*** *that generate the highest concentrations of metals in stormwater runoff. When this menu is required in Sensitive Lake WQ Treatment Areas per Section 1.2.8.1.B, it is intended to be combined with the Sensitive Lake Protection Menu such that a facility design option common to both menus must be used.*

Treatment goal: The Enhanced Basic WQ menu is designed to achieve > 30% dissolved copper removal and > 60% dissolved zinc removal; in addition to Basic treatment (80% TSS removal) for flows up to and including the WQ design flow or volume (defined in Section 6.2.1, p. 6-17). The goal assumes that dissolved copper concentrations for untreated runoff are between 5 and 20 micrograms per liter (*u*/L), and that dissolved zinc concentrations for untreated runoff are between 20 and 300 micrograms per liter (*ug*/L).

Basis: The treatment goal is expressed in terms of dissolved copper and zinc removal. Copper and zinc are reliable indicators of a wider range of heavy metals and are typically found in stormwater runoff from industrial, commercial, and high density residential land uses at levels that are toxic to fish and other aquatic biota. Many metals are readily adsorbed onto particulates in the runoff, usually the finer fraction of the particulates. Facility combinations that remove more of the particulate load than the Basic menu, including the finer fraction, are specified by the Enhanced Basic menu. Facilities providing organic binding sites that enhance metal adsorption are also specified. The treatment goals have been found by WA Ecology to be achievable.

❑ ENHANCED BASIC OPTION 1 — LARGE SAND FILTER

This option includes use of a **large sand filter**, **large sand filter vault**, or **large linear sand filter**. Sizing specifications for these facilities can be found in Sections 6.5.2 (p. 6-106), 6.5.3 (p. 6-123), and 6.5.4 (p. 6-128), respectively. *Note: Presettling is required prior to sand filtration as described in Section 6.5.1.*

❑ ENHANCED BASIC OPTION 2 — STORMWATER WETLAND

Provision of a **stormwater wetland** (see Section 6.4.3, p. 6-92) or **combined detention and stormwater wetland** (see Section 6.4.4, p. 6-98) satisfies the Basic (TSS) and Enhanced Basic (dissolved copper and zinc) removal goals without additional facilities.

❑ ENHANCED BASIC OPTION 3 — TWO-FACILITY TREATMENT TRAIN

This option uses one of the basic water quality treatment options listed in Table 6.1.2.A (p. 6-8) followed by a basic sand filter (see Section 6.5.2, p. 6-106), sand filter vault (see Section 6.5.3, p. 6-123), or a linear

[5] The Enhanced Basic WQ menu targets different pollutants than the lake or bog protection menus. It does not necessarily provide a higher level of treatment except for the target pollutant, metal contaminants.

[6] Other metals, e.g. lead, are toxic to humans and may build up in sediments.

sand filter (see Section 6.5.4, p. 6-128). *Note: At time of publication of this version of the SWDM, no proprietary media or membrane filters are approved by King County as the second element in a treatment train for enhanced basic treatment. Any such future approvals will appear in SWDM Reference 14-A. Proprietary facilities that are listed in gray text in Table 6.1.2.A are only allowed if they are cited in Reference 14-A as approved for this use, or where a given proprietary facility has been approved for a specific project via an experimental design adjustment.*

TABLE 6.1.2.A
PAIRED FACILITIES FOR ENHANCED BASIC TREATMENT TRAIN, OPTION 3

First Basic WQ Facility:	Second WQ Facility:
Bioswale (Sections 6.3.1, 6.3.2, and 6.3.3)	Basic sand filter or sand filter vault (Section 6.5.2 or 6.5.3) or proprietary enhanced (metals removal) media or membrane filter[8]
Filter strip (Sections 6.3.4 and 6.3.5)	Linear sand filter (Section 6.5.4) with no presettling cell needed
Linear sand filter (Section 6.5.4)	Filter strip (Sections 6.3.4 and 6.3.5)
Basic wetpond (Section 6.4.1)	Basic sand filter or sand filter vault (Section 6.5.2 or 6.5.3) or proprietary enhanced (metals removal) media or membrane filter[8]
Wetvault (Section 6.4.2)	Basic sand filter or sand filter vault (Section 6.5.2 or 6.5.3) or proprietary enhanced (metals removal) media or membrane filter[8]
Basic combined detention and wetpool facility (Section 6.4.4)	Basic sand filter or sand filter vault (Section 6.5.2 or 6.5.3) or proprietary enhanced (metals removal) media or membrane filter[8]
Basic sand filter or sand filter vault (Sections 6.5.2 or 6.5.3). *A presettling cell is required if the sand filter is not preceded by a detention facility.*	Proprietary enhanced (metals removal) media or membrane filter[8].
Proprietary media or membrane filter[8] (Section 6.7), listed in Reference 14-A	Basic sand filter or sand filter vault (Section 6.5.2 or 6.5.3) or Proprietary (metals removal) media or membrane filter[8]

[8] The filter must be a type approved for specific treatment use by both Ecology and King County. See Reference 14-A for approved proprietary filters. At time of publication of this manual, the only approved proprietary filter for stand-alone Basic treatment or as the first facility in a 2-facility treatment train is the StormFilter® with ZPG™ media.

6.1.3 SENSITIVE LAKE PROTECTION MENU

Where applied: The Sensitive Lake Protection menu is applied to the watersheds of lakes that have been determined to be particularly sensitive to phosphorus and that are being managed to reduce water quality impacts. This menu applies to stormwater conveyed to the lake by surface flow as well as to stormwater infiltrated within one-quarter mile of the lake in soils with high infiltration rates (i.e., measured rate exceeding 9 inches per hour). If stormwater is infiltrated further than one-quarter mile from the lake, then the Basic WQ menu is applied unless the project is exempt from Core Requirement #8 per Section 1.2.8. For precise details on the application of this and other area-specific water quality menus, refer to Section 1.2.8, "Core Requirement #8: Water Quality."

Note: The Sensitive Lake Protection menu is a ***stand-alone menu****. It integrates the Basic WQ menu level of protection (TSS removal) and the additional protection needed to achieve lake protection goals in the options described below. When this menu is required as specified in Core Requirement #8 (see Section 1.2.8), it is intended to replace the Basic WQ menu in the watersheds of sensitive lakes.*

Treatment goal: The Lake Protection menu is designed to achieve a goal of 50 percent total phosphorus (TP) removal for the WQ design flow or volume (defined in Section 6.2.1, p. 6-17), assuming typical forms and concentrations of phosphorus in untreated stormwater runoff.[9]

Basis: The Lake Protection menu will result in removal of more of the TSS load, including more of the finer fraction of TSS, than the Basic menu. The additional increment of solids removal will also provide enough phosphorus removal to meet the TP goal stated above.

❑ LAKE PROTECTION OPTION 1 — LARGE WETPOND

The 50 percent TP removal goal can be satisfied by use of a **large wetpond** or **large combined detention and wetpond** sized so that the wetpond volume is 1.5 times the Basic water quality volume as determined either by the approved continuous runoff model or as calculated using the manual method described in Section 6.4.1. See Section 6.4.1.1 (p. 6-72) for the large wetpond design, and Section 6.4.4.1 (p. 6-98) for the large combined pond design. *Note: A large wetvault option is not included in this menu since the biological processes thought to remove phosphorus do not take place in underground vaults.*

❑ LAKE PROTECTION OPTION 2 — LARGE SAND FILTER

This option includes use of a **large sand filter, large sand filter vault**, or **large linear sand filter**. Sizing specifications for these facilities can be found in Sections 6.5.2 (p. 6-106), 6.5.3 (p. 6-123), and 6.5.4 (p. 6-128), respectively. *Note: Presettling is required prior to sand filtration as described in Section 6.5.1.*

❑ LAKE PROTECTION OPTION 3 — TWO-FACILITY TREATMENT TRAIN

This option involves use of one of the basic water quality treatment options, listed in Table 6.1.3.A, followed by either a basic sand filter (Section 6.5.2, p. 6-106) or basic sand filter vault (Section 6.5.3, p. 6-123). For dispersed flows, a linear sand filter may be used as the second facility. *Note: At time of publication of this version of the SWDM, only one proprietary media filter and no membrane filters are approved by King County for the first Basic WQ facility. See Reference 14-A.*

[9] Typical TP concentrations in untreated Seattle-area runoff are considered to be between 0.10 and 0.50 mg/L. For projects that are expected to generate higher levels of TP, such as animal husbandry operations, a higher treatment goal may be appropriate.

TABLE 6.1.3.A PAIRED FACILITIES FOR LAKE PROTECTION TREATMENT TRAIN, OPTION 3	
First Basic WQ Facility	**Second WQ Facility**
Bioswale (Sections 6.3.1, 6.3.2, and 6.3.3)	Basic sand filter or sand filter vault (Section 6.5.2 or 6.5.3)
Filter strip (Sections 6.3.4 and 6.3.5)	Linear sand filter (no presettling cell needed) (Section 6.5.4)
Linear sand filter (Section 6.5.4)	Filter strip (Sections 6.3.4 and 6.3.5)
Basic wetpond (Section 6.4.1)	Basic sand filter or sand filter vault (Section 6.5.2 or 6.5.3)
Wetvault (Section 6.4.2)	Basic sand filter or sand filter vault (Section 6.5.1 or 6.5.3)
Stormwater wetland (Section 6.4.3)	Basic sand filter or sand filter vault (Section 6.5.2 or 6.5.3)
Basic combined detention and wetpool facility (Section 6.4.4)	Basic sand filter or sand filter vault (Section 6.5.2 or 6.5.3)
Proprietary media or membrane filter[10]	Basic sand filter or sand filter vault (Section 6.5.2 or 6.5.3)

❑ LAKE PROTECTION OPTION 4 — BASIC MENU PLUS PHOSPHORUS CREDIT

This option provides credit to developments that integrate land use and ***site*** design measures to prevent or reduce the levels of phosphorus leaving the ***site***. Credit is also given for the voluntary use of extra levels of onsite detention, since less in-stream erosion is likely to take place with more highly controlled stormwater releases. This reduction in in-stream erosion and bank failure translates directly into control of the phosphorus load delivered to downstream lakes.

The measures for which credit is given are detailed below, along with the point values assigned to each of the actions. Providing any combination of these measures equaling 10 points or more earns this credit. The credit excuses the applicant from the requirement to provide a second water quality facility. *Thus, even though the development is located in the watershed of a sensitive lake, the water quality requirements can be fully met with the provision of a single water quality facility from the Basic Water Quality menu.*

Credit-Earning Actions

Several land use actions and source controls are particularly effective in reducing phosphorus. These actions are not required by this manual or other regulations; they are an alternative to end-of-the-pipe treatment of stormwater. Credit options for phosphorus-reducing actions are described below.

1. **Leaving at least 65 percent of the *site* undisturbed, including undevelopable land.** Full credit, or **10 points**, is awarded for leaving 65 percent of a ***site*** in undisturbed native vegetation or allowing native vegetation to re-establish. Critical areas and their buffers may be counted. All areas for phosphorus credit must be in tracts dedicated to the County or protected by covenant (one example of covenant language to protect vegetated tracts from disturbance is shown in Reference section 8-O). A

[10] The filter must be a type approved for specific treatment use by both Ecology and King County. See Reference 14-A for approved proprietary filters. At time of publication of this manual, the only approved proprietary filter for stand-alone Basic treatment or as the first facility in a 2-facility treatment train is the StormFilter® with ZPG™ media.

descending scale of points applies where lower percentages of the ***site*** are left undisturbed. **Possible credit = 1 to 10 points.**

2. **Providing extra flow control.** Credit for providing extra flow control applies only in cases where ***site*** runoff travels via stream or open drainage system to the sensitive lake. Voluntary use of the Level 2 flow control standard when the Level 1 standard would be required = 5 points. Voluntary use of the Level 3 flow control standard when the Level 1 standard would be required = 8 points. Voluntary use of the Level 3 flow control standard when the Level 2 standard would be required = 3 points. **Possible credit = 3 to 8 points.**

3. **Directing runoff from target pollution-generating surfaces to grassy areas with level spreading.** Directing runoff from target pollution-generating areas to grassy areas that are not routinely fertilized or to areas of native vegetation results in pollutant removals similar to those obtained in swales while also providing an increased opportunity for infiltration. To use this option, flows must remain unconcentrated and be spread uniformly over the intended area. (Flow spreader details are given in Section 6.2.6.)

   In general, the vegetated area receiving dispersed flows should be at least 25 percent as large as the area contributing flow. The receiving area should be increased by one percent for each percent increase in slope over four percent. The area should be configured so that the length of the flow path is no longer than the width over which flows are dispersed.

   Example:

   Assume a parking lot is 100' × 600', or 60,000 sf. Flows will be dispersed through an adjacent area of native vegetation with a slope of 8 percent.

   The area of vegetation must be at least 17,400 sf (i.e. 25% + 4% (for the 8% slope) × 60,000 sf). Assuming runoff is dispersed continuously along the wider edge of the parking lot, the flow path would need to be at least 29 feet (17,400' ÷ 600'). If the water were dispersed along the shorter edge, flow path would be 174 feet (17,400' ÷ 100'). However, this flow path would be longer than the width over which flows were dispersed (100'), and would not be a satisfactory option. The parking lot could be graded, however, so that flows would be dispersed at both of the 100 foot ends, making each flow path 87 feet, which would be acceptable.

   Credit is proportional to the total volume of runoff diverted; one point is earned for every 25 percent of total volume so directed. **Possible credit = 1 to 4 points.**

4. **Providing covered vehicle washing areas connected to the sanitary sewer system.** This credit applies to commercial, industrial, and multifamily ***sites*** excluding commercial car washes or other operations where this action is already required by other regulations**.** Frequent car-washing can contribute significant amounts of phosphorus to stormwater. Note that sewer districts may have pretreatment requirements before allowing connection to the sanitary sewer. **Possible credit = 3 points.**

Table 6.1.3.B (p. 6-12) details the credit options and associated point totals.

Credit may be applied to the whole ***site*** or to a ***natural discharge area*** within the ***site***. It may be advantageous for a developer to concentrate only on a ***natural discharge area*** if the point total for that particular area could equal 10. For example, assume a particular ***natural discharge area*** is one half the total ***site*** area. If 65 percent of the land area in the ***natural discharge area*** will remain undisturbed, that ***natural discharge area*** is eligible for 10 points (see Table 6.1.3.B). The stormwater from that ***natural discharge area*** could be treated with a single water quality facility from the Basic WQ menu; the second facility could be waived. The rest of the ***site*** would still have the two-facility requirement.

Alternatively, if the entire ***site*** were considered, the undisturbed area decreases to 35 percent, eligible for only 3 points. In this case, the developer would need to implement other controls worth 7 points in order to waive the second water quality facility for the entire ***site***.

If the credit option is used, it shall be applied for during initial drainage review by the King County Department of Local Services, Permitting Division (DLS-Permitting). The application shall include a **written request for credit** based on either the ***site*** plan or the grading plan for the project, and the ***threshold discharge areas*** shall be delineated on the plans. The request shall outline where the credit would be applied and how the point totals are to be achieved. DLS-Permitting staff would then evaluate the request and may waive the second water quality treatment requirement for the ***site*** or ***threshold discharge area*** based on point totals outlined in Table 6.1.3.B (below). **Credit is not given unless requested.**

TABLE 6.1.3.B WATER QUALITY CREDIT FOR PHOSPHORUS CONTROL

Credit Option	Points
Leaving site undisturbed, in native vegetation. .	At least 65 % = 10 60 % = 9 50 % = 7 40 % = 5 30 % = 3 20 % = 1
Directing road runoff to pervious, non-pollution-generating vegetated area.	100 % of volume = 4 75 % of volume = 3 50 % of volume = 2 25 % of volume = 1
Covered car wash area connected to sanitary sewer (multifamily, commercial, or industrial sites, except for commercial car-wash businesses)	3
Extra detention with next most restrictive release rate (if discharge to stream)	Level 1→ Level 2 = 5 Level 1→ Level 3 = 8 Level 2→ Level 3 = 3

6.1.4 SPHAGNUM BOG PROTECTION MENU

Where applied: The Sphagnum Bog Protection menu[11] covers sphagnum bog wetlands[12] greater than 0.25 acres in size.[13] It applies to stormwater conveyed by surface flow to the sphagnum bog vegetation community. If stormwater is infiltrated by the project per Section 5.2, then the Basic WQ menu is applied unless the project is exempt from Core Requirement #8, "Water Quality." For precise details on the application of this and other area-specific water quality menus, refer to Section 1.2.8.

Note: The Sphagnum Bog Protection menu is a stand-alone menu. It integrates the Basic WQ menu level of protection and the additional measures needed to achieve bog protection goals in the options described below. When this menu is required as specified in Core Requirement #8 (see Section 1.2.8), it is intended to replace the Basic WQ menu in areas draining to sphagnum bogs.

Treatment goal: If surface water must be discharged to a bog, the treatment goal is to reduce total phosphorus by 50 percent, reduce nitrate + nitrite by 40 percent, maintain alkalinity below 10 mg/L, calcium concentrations should be less than 2 mg/L, and maintain pH below 6.0[14].

Basis: In their undeveloped condition, bogs are isolated from surface water, being supplied almost solely by rainwater. The best strategy for protection of bog water quality is to infiltrate the water quality design volume while routing high flows around the bog. Although it is not known whether alkalinity or nitrogen can be reduced sufficiently by the options outlined below, there are no other technologically-feasible alternatives at this time. An experimental design adjustment (see Section 1.4) could be pursued as additional technology becomes available.

❑ SPHAGNUM BOG PROTECTION OPTION 1 — LARGE WETPOND FOLLOWED BY LARGE SAND FILTER

This option uses a **large wetpond** (see Section 6.4.1, p. 6-71) or a **large combined detention and wetpond** (see Section 6.4.2, p. 6-86), sized so that wetpond volume is 1.5 times the Basic water quality volume as determined either by the approved continuous runoff model or as calculated using the manual method described in Section 6.4.1. A large sand filtration facility (see Section 6.5.2, p. 6-106, or 6.5.3, p. 6-123) must follow the pond. In order to ensure that algae and sources of alkalinity from the pond are not washed from the pond into the bog, the **sand filter must be the last facility. The sand used for filtration must be silica-based sand rather than an aragonite[15] sand.**

❑ SPHAGNUM BOG PROTECTION OPTION 2 — STORMWATER WETLAND IN SERIES WITH A LARGE SAND FILTER

This option uses a **stormwater wetland** (see Section 6.4.3, p. 6-92) or **combined detention and stormwater wetland** (see Section 6.4.4, p. 6-98) to remove solids and enhance the concentration of organic acids, and a **large sand filter** (see Section 6.5.2, p. 6-106) to remove the finer sediment for alkalinity and nutrient reduction. **The sand used for filtration must be silica-based sand rather than**

---

[11] The Bog Protection menu targets a different set of pollutants than the Sensitive Lake or Enhanced Basic menus. Since the targeted pollutants are more difficult to remove, use of larger and/or additional water quality facilities is required.

[12] A *sphagnum bog wetland* is defined as a wetland having a predominance of sphagnum moss creating a substrate upon which a distinctive community of acid-loving plants is established (see Section 1.2.8.C and "Definitions" for more detail).

[13] The *size* of a sphagnum bog wetland is defined by the boundaries of the sphagnum bog plant community.

[14] Calcium, alkalinity, and pH values are from : Kulzer, L., S. Luchessa, S. Cooke, R. Errington, F. Weinmann, and D. Vitt. 2001. *Characteristics of the low-elevation sphagnum-dominated peatlands of western Washington: A community profile*. King County, WA: King County Water and Land Resources Division.

[15] Aragonite is the second most common type of sand, and is composed of calcium carbonate from biota including but not limited to coral and shellfish. (Sand. (2014, April 12). In Wikipedia, The Free Encyclopedia. Retrieved 20:38, April 15, 2014, from http://en.wikipedia.org/w/index.php?title=Sand&oldid=603938376)

an aragonite sand. The order of facilities is interchangeable since there are both advantages and disadvantages to having the sand filter last in the train. *Note: Presettling is required prior to sand filtration as described in Section 6.5.1***.**

❑ SPHAGNUM BOG PROTECTION OPTION 3 — LARGE SAND FILTER IN SERIES WITH A STORMFILTER WITH CSF MEDIA

This option uses a **large sand filter** or **large sand filter vault** followed by a **StormFilter with CSF media**. Sizing specifications for the large sand filters can be found in Sections 6.5.2 (p. 6-106) and 6.5.3 (p. 6-123). StormFilters are detailed in Reference Section 14-A. **The sand used for filtration must be silica-based sand rather than an aragonite sand.** *Note: Presettling is required prior to sand filtration as described in Section 6.5.1***.**

❑ SPHAGNUM BOG PROTECTION OPTION 4 — THREE-FACILITY TREATMENT TRAIN

This option uses one of the basic water quality treatment options followed by two other facilities. Table 6.1.4.A lists the possible choices of facilities for this option.

TABLE 6.1.4.A FACILITY COMBINATIONS FOR BOG PROTECTION TREATMENT TRAIN, OPTION 4

First Facility	Second Facility	Third Facility
Bioswale (Sections 6.3.1, 6.3.2, and 6.3.3)	Basic sand filter (Sections 6.5.2, 6.5.3, or 6.5.4)	StormFilter® * with CSF[16] (Reference 14-A)
Filter strip (Sections 6.3.4 and 6.3.5)		
Basic wetpond (Section 6.4.1)		
Basic combined detention and wetpool facility (Section 6.4.4)		
Wetvault (Section 6.4.2)		
Stormwater wetland (Section 6.4.3)		
Proprietary media or membrane filter approved by both WA Ecology and King County (see Reference 14-A)[17]		

** Other treatment options may be pursued through an experimental design adjustment per Section 1.4 and Reference 8-F.*

[16] CSF is not approved at all by Ecology or generally by King County at the time of publication of this manual. However, need to provide organic matter replacement to a sphagnum bog necessitates allowing a compost filter with a putative relatively low nitrate and phosphate contribution compared to conventional compost. At such time as King County determines that another facility or treatment train is suitable, CSF could be removed from this menu. Basis: need to feed organic matter to the bog wetland.

[17] The filter must be a type approved for specific treatment use by both Ecology and King County. See Reference 14-A for approved proprietary filters. At time of publication of this manual, the only approved proprietary filter for stand-alone Basic treatment or as the first facility in a treatment train is the StormFilter® with ZPG™ media.

6.1.5 HIGH-USE MENU

Where applied: The High-Use menu is applied to all new development and ***redevelopment projects*** that have ***high-use site*** characteristics, as defined in Chapter 1 (see "Special Requirement # 5, Oil Control"). Oil control devices are to be placed upstream of other facilities, as close to the source of oil generation as practical.

Note: Where this menu is applicable, it is in addition to the area-specific WQ menus.

Treatment goal: Oil control options given in the High-Use menu are designed to meet the goals of no visible sheen or less than 10 mg/L total petroleum hydrocarbons (TPH) leaving the ***site***.

❑ OIL CONTROL OPTION 1 — CATCH BASIN INSERT

Catch basin inserts (see Section 6.6.1, p. 6-133) are allowed to be used to meet the oil control requirements for new or redeveloped ***high-use sites*** where new plus replaced pollution generating impervious surfaces are less than 5,000 square feet AND new pollution generating pervious surfaces are less than ¾ acres in a threshold discharge area. High use sites exceeding the aforementioned threshold must use other oil control options. For new development, the criteria for flow capture given in "Design Criteria" (p. 6-136) must be met. The flow capture criteria apply to the high-use area only, provided that flows not subject to high use are shunted around the insert. For redevelopment ***sites***, additional flow may be routed through the insert if it is not possible for the ***site*** to meet the flow capture criteria without installing new catch basins. Up to 40 percent additional flow may be directed to the insert in these cases.

All catch basin inserts must be fitted with oil sorbent media, to be changed at least monthly in wet weather (generally October through May) and whenever the surface of the media is covered with sediment. Acceptable sorbent media include wood fiber products, such as *Absorbent W* or *SuperSorb*; whole, green fibrous moss such as that supplied by floral shops (must not be ground peat moss); or polymers such as *Petrolok* and *Streamguard*™. These media have been investigated and found to retain captured oil fairly effectively. Cedar Grove compost was tested and found unacceptable for oil retention. Stormwater Management's patented CFS® mix was also tested, and although it performed fairly well, it did not retain oil as well as the other products tested. Therefore, the CFS® shall not be used in catch basin inserts for oil control.

Alternative media may be used if it can be shown they are substantially equivalent to the media listed above. The method that should be used to demonstrate oil retention is given in the decision paper entitled "Oil leachate tests for various adsorbent filter media," May 1994, King County Surface Water Management Division (now Water and Land Resources Division).

❑ OIL CONTROL OPTION 2 — BAFFLE OIL/WATER SEPARATOR

Baffle oil/water separators (see Section 0, p. 6-140) may be used to treat stormwater runoff from high-use developments and facilities that produce relatively high concentrations of oil and grease. Baffle separators historically have been effective in removing oil having droplet sizes of 150 microns or larger. If sized properly, they can achieve effluent concentrations as low as 10 to 15 mg/L.

❑ OIL CONTROL OPTION 3 — COALESCING PLATE OIL/WATER SEPARATOR

Coalescing plate separators (see Section 0, p. 6-140) may be used to treat stormwater runoff from high-use developments and facilities that can produce relatively high concentrations of oil and grease. Current technology and design of coalescing plate separators achieve effluent concentrations as low as 10 mg/L with removal of oil droplet sizes as small as 20 to 60 microns.

❑ OIL CONTROL OPTION 4 — LINEAR SAND FILTER

The linear sand filter (see Section 6.5.4, p. 6-128) is used in the Core Requirement #8 water quality menus (i.e., the Basic, Enhanced Basic, Sensitive Lake, and Sphagnum Bog menus), as well as for oil control in the High-Use menu (Special Requirement #5). However, if used to satisfy Core Requirement #8, the same facility shall not also be used to satisfy the oil control requirement (Special Requirement #5) unless enhanced maintenance is assured. This is to prevent clogging of the filter by oil so that it will function for suspended solids, metals, and phosphorus removal as well. Quarterly cleaning is required at a minimum unless more frequent cleaning is specified otherwise by the designer.

❑ OIL CONTROL OPTION 5 — WETVAULT WITH BAFFLE

A wetvault may be modified to fulfill requirements for oil control provided the following are true:

1. The criteria given at the end of Section 6.4.2.2 for modification of wetvaults for use as a baffle oil/water separators shall be met, and
2. Assurance is provided that the maintenance frequency and oil removal frequency for baffle oil/water separators will be followed (see Section 0, p. 6-140).

❑ OIL CONTROL OPTION 6 — PROPRIETARY FACILITY DESIGN

Section 6.7, "Proprietary Facility Designs" (p. 6-169), discusses general considerations for proprietary manufactured facilities. *Note: At time of publication of this version of the SWDM, no proprietary oil control facilities are approved by King County for use. Any such future approvals will appear in SWDM Reference 14-A.*

❑ OIL CONTROL OPTION 7 — COMPLIANCE WITH OTHER AGENCY REQUIREMENTS

If the ***site*** has a National Pollutant Discharge Elimination System (NPDES) industrial stormwater permit that specifically addresses oil control for the target ***pollution-generating impervious surface*** of the ***site***, compliance with NPDES permit conditions may be adequate to comply with the oil control requirements of Special Requirement #5. Copies of the ***site's*** NPDES permit requirement and the best management practices specifically addressing oil control shall be submitted to determine adequacy.

If the area under the covered fueling island drains to the sanitary sewer, then only the remaining high-use area actually draining to the storm drainage system (normally ingress and egress routes) need comply with the High-Use menu.

Note: *Ecology requires that fueling islands be paved with Portland cement concrete (or equivalent, not including asphaltic concrete) and must drain to a dead-end sump or spill control separator in compliance with the UFC or IFC, and recommends draining from the sump to a sanitary sewer. An alternative to discharge to a sanitary sewer is to collect stormwater from the fuel island containment pad and hold for proper off-site disposal.*

Drains to treatment facilities must have a normally closed shutoff valve. The spill control sump must be sized in compliance with Section 7901.8 of the Uniform Fire Code (UFC). Alternatively the fueling island must be designed as a spill containment pad with a sill or berm raised to a minimum of four inches (Section 7901.8 of the UFC) to prevent the runoff of spilled liquids and to prevent run-on of stormwater from the surrounding area. (See Ecology's Stormwater Management Manual for Western Washington, Volume IV, Section 2.2, S409 BMPs for Fueling At Dedicated Stations. These BMPs are also required by the King County Industrial Waste Section for new construction.

6.2 GENERAL REQUIREMENTS FOR WQ FACILITIES

This section presents general requirements and other information applicable to the design of water quality (WQ) facilities. Topics covered include the following:

- "Water Quality Design Flows," Section 6.2.1
- "Sequence of Facilities," Section 6.2.2 (p. 6-20)
- "Setbacks, Slopes, and Embankments," Section 6.2.3 (p. 6-23)
- "Facility Liners," Section 6.2.4 (p. 6-27)
- "Flow Splitter Designs," Section 6.2.5 (p. 6-32)
- "Flow Spreading Options," Section 6.2.6 (p. 6-36).

When detail in the WQ designs is lacking, refer to Chapter 5 for guidance. In cases where requirements are extremely costly, a less expensive alternative that is functionally equivalent in terms of performance, environmental effects, health and safety, and maintenance may be sought through the adjustment process (see Section 1.4).

New Facility Designs

New proprietary and public domain facility designs may be reviewed through an Experimental Design Adjustment per Section 1.4. Any new proprietary designs must be approved through the state Department of Ecology's *TAPE program*[18] before they can be approved by King County. Once a facility has been shown to meet pollutant removal goals, King County may at its discretion allow use of that facility through a blanket adjustment per Section 1.4. New facility designs may be limited to use only on projects that will be privately owned and maintained. Blanket adjustments will specify design and maintenance criteria.

Use of Materials

Galvanized metals leach zinc into the environment, especially in standing water situations. High zinc concentrations, sometimes in the range that can be toxic to aquatic life, have been observed in the region.[19] Therefore, use of galvanized materials in stormwater facilities and conveyance systems is discouraged. Where other metals, such as aluminum or stainless steel, or plastics are available, they shall be used.

6.2.1 WATER QUALITY DESIGN FLOWS AND TREATMENT VOLUMES

Water Quality Design Flow

The water quality design flow is defined as follows:

- *Downstream of detention:* The full **2-year release rate from the detention facility,** determined using the approved continuous runoff model.
- *Preceding detention, or when detention facilities are not required*: The **flow rate from the drainage basin at or below which 91% of the total runoff volume will be treated**. Design criteria for treatment facilities are assigned to achieve the applicable performance goal at the water quality design

[18] *TAPE* stands for Technology Assessment Protocol – Ecology. For more information, see Ecology's website at https://ecology.wa.gov/Regulations-Permits/Guidance-technical-assistance/Stormwater-permittee-guidance-resources/Emerging-stormwater-treatment-technologies

[19] Finlayson, 1990. Unpublished data from reconnaissance of Metro Park and Ride lot stormwater characteristics.

flow rate (e.g., 80 percent TSS removal). At a minimum, 91% of the total runoff volume, as estimated by an approved continuous runoff model with 15-minute time steps calibrated to ***site*** conditions, must pass through the treatment facility(ies) at or below the approved hydraulic loading rate for the facility(ies).

Design flow rates for water quality facilities designed using this manual are calculated using a continuous simulation model. Most of the performance research on biofiltration BMPs has been conducted on facilities that used event-based designs. The volume of treatment runoff can be predicted from a 24-hour storm with a 6-month return frequency (a.k.a., 6-month, 24-hour storm). However, the 91st percentile flow event (as calculated by the continuous model) tends to be less than the estimated 6-month, 24-hour event flow rate in most cases. To maintain sizing comparable to the performance research, Ecology has developed a correlation between the 91st percentile flow event calculated using the approved models and the single-event predicted flow event. This correlation is used in sizing water quality flow-based facilities in Section 6.3 and is presented in Table 6.2.1.A below. Intermediate values of the ratio *k* for WWHM are calculated by linear interpolation.

(Note: This table does not apply to flow-based non-water quality BMPs; see relevant flow rate requirements for flow-based non-water quality BMPs in Appendix C.)

TABLE 6.2.1.A
ADJUSTMENT FACTOR *k* FOR CALCULATING MODIFIED WATER QUALITY FLOW RATE FROM MODELED ON-LINE/OFF-LINE RATES

SBUH Peak/WWHM On-Line 15-min WQ Flow Ratio vs 6-month Precipitation for 0% to 100% Impervious Areas		**SBUH Peak/WWHM Off-Line 15-min WQ Flow Ratio vs 6-month Precipitation for 0% to 100% Impervious Areas**	
6-month, 24-hr precipitation (72% of the 2-yr), Inches	Ratio, *k*	6-month, 24-hr precipitation (72% of the 2-yr), Inches	Ratio, *k*
0.80	1.01	0.80	1.95
1.00	1.30	1.00	2.44
1.50	2.02	1.50	3.68
2.00	2.74	2.00	4.92
2.50	3.45	2.50	6.16
2.90	4.03	2.90	7.15
Intermediate values of k for WWHM are calculated by linear interpolation			

SBUH Peak/MGSFlood On-Line and Off-Line 15-min WQ Flow Ratio vs 6-month Precipitation for 0% to 100% Impervious Areas

For **on-line** facilities: $k = 1.41\ (P72\%,\ 2\text{-yr.}) - 0.052$ (Eq. 6-1)

For **off-line** facilities: $k = 2.50\ (P72\%,\ 2\text{-yr.}) - 0.052$ (Eq. 6-2)

where: $P72\%$, 2-yr = 72% of the 2-year, 24-hour precipitation depth (in.)

Note: If the 6-month, 24-hour precipitation depth (in.) is known for the project site, that value may be used instead of $P72\%$, 2-yr.

The ratio between the 91st percentile flow event and the estimated 6-month, 24-hour flow rate varies with location and percent of impervious area in the modeled drainage basin. The correlations in the table account for these variations. When designing bioswales and other flow rate based facilities,

multiply the on-line or off-line water quality design flow rate determined with the approved model by the coefficient *k* (off-line or on-line) determined from the associated table (see Methods of Analysis for guidance on selection of on-line or off-line flow rate and application of the associated correlation). Unless amended to reflect local precipitation statistics, the 6-month, 24-hour precipitation amount may be assumed to be 72 percent of the 2-year, 24-hour amount determined either with the approved model or by interpolating between isopluvials for the 2-year, 24-hour precipitation. Isopluvials for 2-year, 24-hour amounts for Western Washington are reprinted in Section 3.2.1, Figure 3.2.1.A.

Flow Volume to be Treated

When water quality treatment is required pursuant to the core and special requirements of this manual, the water quality design storm volume, when using an approved continuous runoff model, shall be equal to the simulated daily volume that represents the upper limit of the range of daily volumes that accounts for 91% of the entire runoff volume over a multi-decade period of record.

Alternatively, the water quality design volume of runoff can be predicted from a 24-hour storm with a 6-month return frequency (a.k.a., 6-month, 24-hour storm). Wetpool facilities are sized based upon use of the NRCS (formerly known as SCS) curve number equations for the 6-month, 24-hour storm[20]. Treatment facilities sized by this simple runoff volume-based approach are the same size whether they precede detention, follow detention, or are integral with the detention facility (i.e., a combined detention and wetpool facility).

The approved model calculates the water quality design volume directly. Alternatively, the NRCS method described in Section 6.4.1.1 may be used. Unless amended to reflect local precipitation statistics, the 6-month, 24-hour precipitation amount may be assumed to be 72 percent of the 2-year, 24-hour amount. Interpolating between isopluvials for the 2-year, 24-hour precipitation and multiplying by 72% yields the appropriate storm size. Isopluvials detailed for 2-year, 24-hour amounts for western King County are reprinted in Section 3.2.1, Figure 3.2.1.A. For locations east of the figure limits, precipitation amounts are more variable; use the 2-year, 24-hour isopluvial map located on the National Oceanic and Atmospheric Administration (NOAA) website at https://hdsc.nws.noaa.gov/hdsc/files25/Atlas2_Volume9.pdf.

Note that facilities which are sized based on volume and which include routing of flows through a detention facility, such as the detailed sand filter method, are significantly smaller when located downstream of detention, even though the same volume of water is treated in either situation. This is because the detention facility routing sequence stores peaks within the pond and releases them at a slow rate, reducing the size of the sand filter pond subsequently needed (the volume needed to store the peaks need not be provided again in the sand filter pond).

Treatable Flows

As stated in Chapter 1, only runoff from target pollution-generating surfaces must be treated using the water quality facility options indicated in the applicable water quality menu. These surfaces include both ***pollution-generating impervious surface*** and ***pollution-generating pervious surface***. "Target" means that portion from which runoff must be treated using a water quality facility as specified in Chapter 1. ***Pollution-generating impervious surfaces*** are those impervious surfaces which are subject to vehicular use, industrial activities, or storage of erodible or leachable materials, wastes, or chemicals; and which receive direct rainfall or the run-on or blow-in of rainfall. For subdivisions, target ***pollution-generating impervious surfaces*** typically include right-of-way improvements (roads), parking areas and driveways that are not ***fully dispersed*** as specified in Section 1.2.3.2. Metal roofs are also considered to be ***pollution-generating impervious surface*** unless they are coated with an inert, non-leachable material (see Reference 11-E); or roofs that are subject to venting significant amounts of dusts, mists, or fumes from manufacturing, commercial , or other indoor activities. ***Pollution-generating pervious surfaces*** are those

[20] For more information, see *Urban Hydrology for Small Watersheds,* Technical Release 55 (TR-55), June 1986, published by the NRCS. See Table 6.4.1.1.xx for CN values to be used with this manual.

non-impervious surfaces subject to use of pesticides and fertilizers, loss of soil, or the use or storage of erodible or leachable materials, wastes, or chemicals. For subdivisions, target ***pollution-generating pervious surfaces*** typically include lawns and landscaped areas that are not ***fully dispersed*** and from which there will be some concentrated surface discharge in a natural channel or man-made conveyance system from the ***site***.

The following points summarize which ***site*** flows must be treated and under what circumstances:

- All runoff from target ***pollution-generating impervious surfaces*** is to be treated through the water quality facility or facilities required in Chapter 1 and specified in the Chapter 6 menus.
- Runoff from ***lawns and landscaped areas*** often overflows toward street drainage systems where it is conveyed to treatment facilities along with the road runoff. However, sometimes runoff from commercial areas and residential backyards drains into open space or vegetated buffer areas. In these cases, buffers may be used to provide the requisite water quality treatment provided:
    1. Runoff sheet flows into the buffer or a dispersal trench is provided to disperse flows broadly into the buffer, and
    2. The flow path through the pollution-generating area is limited to 200 feet, and
    3. The buffer contains only native vegetation and is not itself subject to application of any fertilizers or pesticides.
- Drainage from impervious surfaces that are **not pollution-generating** (such as patios, walkways, and some roofs) or are **not target pollution-generating surfaces** may bypass the water quality facility. However, this allowance to bypass does not excuse target impervious surfaces from, meeting the flow control requirements per Core Requirement #3. Note that **metal roofs** are considered pollution-generating unless they are treated to prevent leaching (see Reference 11-E), as are roofs that are subject to venting significant amounts of dusts, mists, or fumes from manufacturing, commercial, or other indoor activities.
- Drainage from areas in native vegetation should not be mixed with untreated runoff from streets and driveways, if possible. It is best to infiltrate or disperse this relatively clean runoff to maximize recharge to shallow groundwater, wetlands, and streams.
- Where runoff from non pollution-generating impervious areas (non-PGIS), areas in native vegetation, or any other area not targeted for water quality treatment reaches a water quality facility, flows from those areas must be included in the sizing calculations for the facility. Once runoff from non-pollution-generating areas and non-target pollution-generating areas is combined with runoff from target pollution-generating areas, it cannot be separated before treatment.

6.2.2 SEQUENCE OF FACILITIES

As specified in the water quality menus, where more than one water quality facility is used, the order is often prescribed. This is because the specific pollutant removal role of the second or third facility in a treatment train often assumes that significant solids settling has already occurred. For example, phosphorus removal using a two-facility treatment train relies on the second facility (sand filter) to remove a finer fraction of solids than those removed by the first facility.

There is a larger question, however, of whether water quality facilities should be placed upstream or downstream of detention facilities. In general, all water quality facilities may be installed upstream of detention facilities, although presettling basins are needed for sand filters and infiltration basins. Not all water quality facilities, however, can be located downstream of detention facilities. Those facilities that treat sheet flows, such as filter strips and narrow-area filter strips, will seldom be practical downstream of detention facilities. Other facilities present special problems that must be considered before placement downstream is advisable.

Two facilities that fall into this latter category are the basic bioswale (see Section 6.3.1, p. 6-41) and the sand filter or sand filter vault (see Sections 6.5.2 or 6.5.3). For these facilities, the prolonged low flows resulting from Level 2 or 3 flow control may interfere with facility operation. In the case of basic bioswales, prolonged flows, generally in excess of about two weeks, will cause the grass to die. This can be dealt with by using the wet bioswale design.

In the case of sand filters, prolonged flows may result in the sand being saturated for long periods. Saturated sand can become hypoxic or anoxic (lose most or all oxygen) when dissolved oxygen in the pore water becomes depleted. Under these conditions, some previously trapped phosphorus can become soluble and be released[21], resulting in phosphorus releases in excess of influent concentrations. To prevent long periods of sand saturation, adjustments may be necessary after the sand filter is in operation to bypass some areas of the filter, allowing them to drain completely. If saturated conditions are present after facility operation, adjustments to the design shall be required. It may also be possible to employ a different alternative that uses facilities less sensitive to prolonged flows. Table 6.2.2.A summarizes placement considerations of water quality facilities in relation to detention.

Oil control facilities must be located upstream of water quality facilities and as close to the source of oil-generating activity as possible. They should also be located upstream of detention facilities, if possible.

[21] Bicudo, D. D. C., et al. (2007). "Undesirable side-effects of water hyacinth control in a shallow tropical reservoir." Freshwater Biology 52(6): 1120-1133.

TABLE 6.2.2.A WATER QUALITY FACILITY PLACEMENT IN RELATION TO DETENTION		
Water Quality Facility	**Preceding Detention**	**Following Detention**
Basic bioswale (Section 6.3.1)	OK	OK if downstream of Level 1 detention. However, prolonged flows may cause soil saturation and injure grass. If downstream of a Level 2 or 3 flow control pond, the wet bioswale may be needed. (See Section 6.3.2.)
Wet bioswale (Section 6.3.2)	OK	OK
Lateral inflow bioswale (Section 6.3.3)	OK	No—must be installed before flows concentrate.
Filter strip or roadway filter strip (Sections 6.3.4 and 6.3.5)	OK	No—must be installed before flows concentrate.
Basic or large wetpond (Section 6.4.1)	OK	OK—less water level fluctuation in ponds downstream of detention may improve aesthetic qualities.
Basic or large combined detention and wetpond (Section 6.4.4)	Not applicable	Not applicable
Wetvault (Section 6.4.2)	OK	OK
Basic or large sand filter or sand filter vault (Section 6.5.2 or 6.5.3)	OK, but presettling and control of floatables needed	OK—sand filters downstream of a Level 2 or 3 flow control pond may require field adjustments if prolonged flows cause sand saturation and resultant hypoxic, anoxic or anaerobic conditions, interfering with the phosphorus removal mechanism and likely resulting in episodic phosphorus releases in excess of influent concentrations.
Stormwater wetland/pond (Section 6.4.3)	OK	OK—less water level fluctuation and better plant diversity are possible if the stormwater wetland is located downstream of the detention facility.

6.2.3 SETBACKS, SLOPES, AND EMBANKMENTS

This section presents the general requirements for water quality facility setbacks, side slopes, fencing, and embankments.

When locating water quality facilities near wetlands and streams, there is a potential that the wetland or stream water level may be lowered by draining to the facility. Care in the design and siting of the facility or conveyance elements associated with the facility is needed to assure this impact is avoided. Sufficient setback of the facility from the water body is one method to prevent impact.

When locating water quality facilities near steep slopes, there is a potential for slope erosion or destabilization as a result of seepage, infiltration or overflow.

❑ SETBACKS FROM TRACT LINE

Water quality facilities that are maintained by the County must be in tracts dedicated to the County. Different water quality facilities and different types of side slopes (bermed vs. cut) have somewhat different requirements for setback from the tract line or setbacks for structures on adjacent tracts; these various requirements are given in Table 6.2.3.A (p. 6-25).

Most setbacks from tract lines are for maintenance equipment maneuverability. Setback requirements do not apply to water quality facilities that are privately maintained, but adequate room for maintenance equipment shall be considered during ***site*** design. Restrictions on the placement of structures on adjacent internal lots, as specified for infiltration facilities in Sections 5.2.2, 5.2.3, and 5.2.4, do however apply to privately maintained facilities.

❑ SIDE SLOPES, FENCING, AND EMBANKMENTS

Side slopes for water quality facilities should not exceed a slope of 3H:1V. Moderately undulating slopes are acceptable and can provide a more natural setting for the facility. In general, gentle side slopes improve the aesthetic attributes of the facility and enhance safety. Fencing may be required for public safety and/or protecting the integrity and function of the facility.

Intent:

The requirements for slopes, fencing, and embankments are intended to accomplish the following objectives:

- To prevent persons from inadvertently slipping into the pond, either by providing gentle interior side slopes (3H:1V or gentler) or by fencing or other barrier
- To allow easy egress from the pond (gentle side slopes, safety benches, etc.) when access is not restricted by a fence or other barrier
- To ensure interior and exterior slopes or embankments are stable and will not create a hazardous or damaging situation.

Water quality facilities must meet the following requirements for side slopes, fencing, and embankments:

1. If the water quality facility (wetpond, sand filter, stormwater wetland, etc.) will hold standing water deeper than 2 feet, **fencing is required** for interior slopes steeper than 3H:1V. If only sections of the slope are steeper than 3:1, barrier shrubs, such as barberry, may be used rather than fencing for sections shorter than 20 feet. Planting climbing vines at the base of a fence can enhance its aesthetic qualities.
2. All open (uncovered) sand filters require fencing. The intent is to prevent sand filters from being used recreationally and to exclude domestic animals.

3. Where required, fencing shall be placed **at or above the overflow water surface**. Side slope and attendant fencing requirements are not applicable to slopes **above** the overflow water surface. The specific fencing requirements given in Chapter 5 (see Section 5.1.1) also apply to WQ facilities.
4. Except for sand filters, if non-residential commercial or industrial facilities are **privately owned and maintained**, the fencing requirements of this manual are recommended rather than required. However, the ***site*** must still comply with any fencing requirements in other codes or regulations.
5. For facilities owned and maintained by the County, and all residential facilities owned by private parties or homeowners' associations, at least **25 percent of the facility perimeter** shall have interior sides no steeper than 3H:1V, even if fenced, to minimize safety risks. Access to the side slopes shall be provided for maintenance. For private non-residential commercial and industrial facilities, the same is recommended rather than required.
6. Facilities landscaped and developed for passive recreation opportunities must comply with Detention Ponds in Recreational Tracts in Section 5.1.1,.
7. Interior side slopes may be **retaining walls**, provided that the design is prepared and stamped by a ***civil engineer***. A fence shall be provided along the top of the wall.
8. Exterior side slopes shall not be **steeper than 2H:1V** unless confirmed stable by a geotechnical engineer.
9. Water quality facilities with embankments that impound water must comply with Washington State **dam safety regulations** (WAC 173-175). The cited language below is as of February 2012 and is excerpted verbatim from the Washington Administrative Code except for substitution of *Department of Ecology* for *department*. When reading, substitute *facility* for *dam*, and *overflow water surface* for *crest*:

   - (1) These regulations are applicable to dams which can impound a volume of ten acre-feet or more of water as measured at the dam crest elevation. The ten acre-feet threshold applies to dams which can impound water on either an intermittent or permanent basis. Only water that can be stored above natural ground level or which could be released by a failure of the dam is considered in assessing the storage volume.

     The ten acre-feet threshold applies to any dam which can impound water of any quality, or which contains any substance in combination with sufficient water to exist in a liquid or slurry state at the time of initial containment.

   - (2) For a dam whose dam height is six feet or less and which meets the conditions of subsection (1) of this section, the Washington Department of Ecology (Ecology) may elect to exempt the dam from these regulations.

     The decision by Ecology to exempt a dam will be made on a case-by-case basis for those dams whose failure is not judged to pose a risk to life and minimal property damage would be expected.

     If the storage capacity is less than 10 acre-feet above natural ground level, then the facility is exempt from Ecology review.

TABLE 6.2.3.A SETBACK REQUIREMENTS *

WATER QUALITY FACILITY	SETBACK FROM TRACT LINE		
	At Grade or Underground	**If Facility Slope is Cut into Grade**	**If Slope is an Embankment**
Bioswale	N/A	See conveyance system requirements (Section 4.1)	5 feet from toe of exterior slope
Filter strip	5 feet from toe	5 feet from toe	N/A
Wetpond	N/A	5 feet from emergency overflow water surface (WS)	5 feet from toe of exterior slope
Combined detention and wetpond	N/A	5 feet from emergency overflow WS	5 feet from toe of exterior slope
Stormwater wetland	N/A	5 feet from emergency overflow WS	5 feet from toe of exterior slope
Wetvault or sand filter vault	5 feet from property line	N/A	N/A
Sand filter ponding area	N/A	5 feet from emergency overflow WS	5 feet from toe of exterior slope
Linear sand filter	5 feet from property line	N/A	N/A
Proprietary media or membrane filter (vault)[22]	5 feet from property line	N/A	N/A

* **Greater setback distances are required whenever expressly stated or referenced in this manual or when required by other County codes or other agencies**. Steep slopes, land slide areas, open water features, springs, wells, and septic tank drainfields are features that often have additional setback requirements.

Geotechnical Setbacks: Except for tanks, vaults, and pipes:

1. Facilities are not allowed on slopes greater than 25% (4:1). A geotechnical analysis and report is required if located within 200 feet of a steep slope hazard area or landslide hazard area OR if the facility is located within a setback distance from top of slope equal to the total vertical height of a slope area that is steeper than 15%. The geotechnical analysis must consider cumulative impacts from the project and surrounding areas under full built-out conditions.

2. The facility design water surface shall be a minimum of 200 feet from any steep slope hazard area or landslide hazard area. Upon analysis and approval of a licensed geotechnical engineer or engineering geologist, this setback may be reduced to 50 feet. The geotechnical analysis must consider cumulative impacts from the project and surrounding areas under full built-out conditions.

3. The facility design water surface shall be set back a minimum distance from top of slope equal to the total vertical height of a slope area that is steeper than 15%. Upon analysis and approval of a licensed geotechnical engineer or engineering geologist, this setback may be reduced to 50 feet. The geotechnical analysis must consider cumulative impacts from the project and surrounding areas under full built-out conditions.

Public Health Minimum Setbacks for all facilities:

[22] See Reference 14-A for approved proprietary vault filters.

TABLE 6.2.3.A SETBACK REQUIREMENTS *

Some typical setback distances imposed by the Seattle-King County Department of Public Health include the following:

- Open water features: 100 feet
- Wells: 100 feet
- Springs used for potable water: 200 feet
- Septic tanks: 50 feet, and drainfields: 100 feet, tanks or vaults must not be located so that they could impede septic drainfield flows.

WA Ecology Stormwater Facility Setback Requirements for Public Health

- Stormwater infiltration systems shall be set back at least 100 feet from open water features and 200 feet from springs used for drinking water supply. Infiltration facilities up-gradient of drinking water supplies must comply with State Health Department requirements (Washington Wellhead Protection Program, Department of Health, 12/93).
- Stormwater infiltration systems, and unlined wetponds and detention ponds shall be located at least 100 feet from drinking water wells and septic tanks and drainfields.

Where one agency's setback requirements are more or less restrictive than another's, the more restrictive setback is required.

6.2.4 FACILITY LINERS

Water quality facilities, detention facilities, and open conveyance systems in which untreated water is in direct contact with the soil may require liners for any of three reasons: groundwater quality protection, steep slope or building protection, and/or stormwater treatment facility performance.

Liners are intended to:

1. Reduce the likelihood that pollutants in stormwater will reach ground water by transmission through soil from earthen facilities and conveyances.
2. Prevent infiltration where underflow could cause problems with steep slopes or nearby structures.
3. Ensure permanent wet pools for proper functioning of wetponds, treatment wetlands, and pre-settling ponds.
4. Ensure wet conditions in the second cell of stormwater treatment wetland sufficient to maintain wetland plant vegetation.

Types of Liners

Low permeability liners

Low permeability liners reduce infiltration to a very slow rate, generally less than 0.02 inches per hour (1.22 cm/day). Low permeability liners may be fashioned from compacted till, clay, geomembrane, or concrete as detailed in Section 6.2.4.1.

Treatment liners

Treatment liners are soil layers meeting specific quality criteria. Depending on design requirements, treatment liners may include in-place native soils, amended soils, or imported soils. Treatment liners are assumed to treat infiltrating stormwater before it reaches more freely draining soils. Treatment liners have slow rates of infiltration; the initial measured rate should be less than 2.4 inches per hour (1.7×10^{-3} cm/s), but rates are not as slow as with low permeability liners. See Section 6.2.4.2 for details.

Where Liners Are Required for Groundwater Protection

Outside of Groundwater Protections Areas

A liner is required for facilities and conveyances handling untreated water that is in direct contact with the soil if the soil has an *initial infiltration rate*[23] greater than 9 inches per hour (0.15 inches per minute) and the soil suitability criteria for groundwater protection given in Chapter 5, Section 5.2.1 is not met.

Inside Groundwater Protections Areas

A liner is required for facilities and conveyances handling untreated water that is in direct contact with the soil when the soil infiltration rate exceeds an *initial infiltration rate*[32] of 2.4 inches per hour (0.04 inches per minute) and the soil suitability criteria for groundwater protection given in Chapter 5, Section 5.2.1, is not met.

Where Liners are Required to Ensure Permanent Pools and Wet Conditions

1. Both cells of a two-cell wetpond and the single cell of a one cell wetpond must retain a permanent pool of water throughout the wet season. A wetpond is considered non-compliant if the pond level drops more than 12” in any 7 day measurement period. A low permeability liner will be required to achieve this standard in infiltrative soils.

---

23 Infiltration rates can either be measured in the field using methods given in Chapter 5 or inferred from the USDA soil textural triangle included in “Groundwater Protection “, Section 5.2.1 .

2. Presettling ponds must retain a permanent pool of water throughout the wet season. A presettling pond is considered non-compliant if the pond level drops more than 12" in any 7 day measurement period. A low permeability liner will be required to achieve this standard in infiltrative soils.
3. Both cells of a stormwater wetland shall be lined in infiltrative soils as follows:
   a) The first cell of a treatment wetland must retain a permanent pool of water throughout the wet season. It is considered non-compliant if the pond level drops more than 12" in any 7 day measurement period. A low permeability liner will be required to achieve this standard in infiltrative soils.
   b) The second cell must retain water for at least 10 months of the year. A low permeability liner will be required to achieve this standard in infiltrative soils. A treatment liner is an alternative where groundwater levels and/or existing soil infiltration rates are sufficient to achieve the standard.

General Design Criteria

1. Table 6.2.4.A (p. 6-29) identifies the type of liner for use with various stormwater facilities. If a facility requires a liner, a **treatment liner** shall be provided, except where a low permeability liner is noted in Table 6.2.4.A.
2. Liners shall be evenly placed over the bottom and/or sides of the treatment area of the facility as indicated in Table 6.2.4.A. Areas above the treatment volume that are required to pass flows greater than the water quality treatment flow (or volume) need not be lined, except in groundwater protection areas which must be lined to the 2 year water surface in a combined facility or overflow water surface in a non-combined facility. *Note: if the liner cannot be anchored at the required elevation, the lining must be extended to the top of the interior side slope and anchored.*
3. For **low permeability liners**, the following criteria apply**:**
   a) Where the seasonal high groundwater elevation is likely to contact a low permeability liner, liner buoyancy may be a concern. A low permeability liner shall not be used in this situation unless evaluated and recommended by a geotechnical engineer.
   b) Where grass must be planted over a low permeability liner per the facility design, a minimum of 6 inches of good topsoil or compost-amended[24] native soil (2 inches compost[24] tilled into 6 inches of native soil) must be placed over the liner in the area to be planted. Twelve inches is preferred.
   c) If an **identification sign** is required for the facility (see detention pond requirements in Section 5.1.1), the face of the sign shall bear a note indicating the facility is lined to protect water quality. In addition, the back of the sign shall include information indicating which facilities are lined, the extent of lining, the liner material used, the liner thickness (if clay or till), and the type and distance of the marker above the liner (if a geomembrane). This information need only be readable by someone standing at arms-length from the sign.
4. If a **treatment liner** will be below the seasonal high water level, the pollutant removal performance of the liner must be evaluated by a geotechnical or groundwater specialist and found to be as protective as if the liner were above the level of the groundwater.

See Sections 6.2.4.1 and 6.2.4.2 for more specific design criteria on the various options for low permeability liners and treatment liners.

[24] Compost must meet the compost quality requirements in Reference 11-C. Compost for application of this requirement in stormwater treatment wetlands must be Specification 1 Compost detailed in Reference 11-C.

TABLE 6.2.4.A LINING TYPES FOR STORMWATER FACILITIES		
Facility Type	**Area to be Lined**	**Type of Liner**
Bioswale	Bottom and sides	Treatment liner
Wet bioswale	Bottom and sides	Low permeability liner (If the swale will intercept the seasonal high groundwater table, a treatment liner is recommended.)
Lateral inflow bioswale	Bottom and sides	Treatment liner
Filter strip, narrow-area filter strip	Bottom	Treatment liner
Presettling pond or basin	Bottom and sides	Low permeability liner (If the cell will intercept the seasonal high groundwater table, a treatment liner is recommended.)
Wetpond	**First cell**: bottom and sides to WQ design water surface,(except in groundwater protection areas which must be lined to the overflow water surface	Low permeability liner (If the cell will intercept the seasonal high groundwater table, a treatment liner is recommended.)
	Second cell: bottom and sides to WQ design water surface,(except in groundwater protection areas which must be lined to the overflow water surface	Low permeability liner (If the cell will intercept the seasonal high groundwater table, a treatment liner is recommended.)
	Single cell: bottom and sides to WQ design water surface, (except in groundwater protection areas which must be lined to the overflow water surface	Low permeability liner
Combined detention/WQ facility	**First cell**: bottom and sides to the 2-year live storage elevation	Low permeability liner (If the cell will intercept the seasonal high groundwater table, a treatment liner is recommended.)
	Second cell: bottom and sides to the 2-year live storage elevation	Low permeability liner (If the cell will intercept the seasonal high groundwater table, a treatment liner is recommended.)
	Single cell: bottom and sides to the 2-year live storage elevation	Low permeability liner
Wet vault	Not applicable	No liner needed
Stormwater wetland	Bottom and sides, both cells	Low permeability liner (If the facility will intercept the seasonal high groundwater table, a treatment liner is recommended.)
Sand filter	Pond sides only	Treatment liner
Detention Pond	Bottom and sides to the 2-year live storage elevation	Treatment Liner
Sand filter vault	Not applicable	No liner needed
Linear sand filter	Not applicable if in vault Bottom and sides of presettling cell if not in vault	No liner needed Low permeability or treatment liner
Proprietary filter (in vault)	Not applicable	No liner needed

6.2.4.1 DESIGN CRITERIA FOR LOW PERMEABILITY LINER OPTIONS

This section presents the design criteria for each of the following four low permeability liner options:

- Compacted till liners
- Clay liners
- Geomembrane liners
- Concrete liners.

❑ COMPACTED TILL LINERS

1. Liner thickness shall be 18 inches after compaction.
2. Soil shall be compacted to 95% minimum dry density, modified proctor method (ASTM D-1557).
3. Soil should be placed in 6 inch lifts.
4. Soils may be used that meet the following gradation:

Sieve Size	Percent Passing
6 inch	100
4 inch	90
#4	70 - 100
#200	30 - 100

❑ CLAY LINERS

1. Minimum dry (un-swollen) thickness of 12 inches
2. Compacted to 95% minimum dry density, standard proctor method ASTM D-698
3. Clay Particles Passing, ASTM D-422, not less than 30 percent
4. Plasticity Index of Clay, ASTM D4318, not less than 15 percent
5. The slope of clay liners must be restricted to 3H:IV for all areas requiring soil cover; otherwise, the soil layer must be stabilized by another method so that soil slippage into the facility does not occur. Any alternative soil stabilization method must take maintenance access into consideration.
6. Where clay liners form the sides of ponds, the interior side slope should not be steeper than 3H:1V, irrespective of fencing. This restriction is to ensure that anyone falling into the pond may climb out safely.

❑ GEOMEMBRANE LINERS

1. Geomembrane liners shall be UV resistant and have a minimum thickness of 30 mils. A thickness of 40 mils shall be used in areas of maintenance access or where heavy machinery must be operated over the membrane. Protect the geomembrane liner from puncture, tearing, and abrasion by installing geotextile fabric on the top and bottom of the geomembrane. .
2. Geomembranes shall be bedded according to the manufacturer's recommendations.
3. Liners shall be installed so that they can be covered with 12 inches of top dressing forming the bottom and sides of the water quality facility. Top dressing shall consist of 6 inches of crushed rock covered with 6 inches of native soil. The rock layer is to mark the location of the liner for future maintenance operations. As an alternative to crushed rock, 12 inches of native soil may be used if orange plastic "safety fencing" or another highly-visible, continuous marker is embedded 6 inches above the membrane.

4. If possible, liners should be of a contrasting color so that maintenance workers are aware of any areas where a liner may have become exposed when maintaining the facility.
5. Where top dressing is required, liners shall not be used on slopes steeper than 5H:1V, to prevent the top dressing material from slipping. Textured liners may be used on slopes up to 3H:1V upon recommendation by a geotechnical engineer or engineering geologist that the top dressing will be stable for all site conditions, including maintenance.

❑ CONCRETE LINERS

1. Portland cement concrete liners are allowed irrespective of facility size, and shotcrete may be used on slopes; however, specifications must be developed by an engineer who certifies the liner against cracking or losing water retention ability under expected conditions of operation, including facility maintenance operations. Cautionary design note: weight of maintenance equipment can be up to 80,000 pounds when fully loaded.
2. Asphaltic concrete may not be used for a liner because of asphalt's permeability to many organic pollutants, and potential for asphalt to leach pollutants into stored or conveyed water.
3. If grass is to be grown in soil over a concrete liner, slopes must be no steeper than 5H:1V to prevent the top dressing material from slipping.

6.2.4.2 DESIGN CRITERIA FOR TREATMENT LINER OPTIONS

This section presents the design criteria for the organic soil layer used as a treatment liner.

❑ ORGANIC SOIL LAYER

1. A two-foot thick layer of soil with a minimum organic matter (OM) content of 1.0% AND a minimum cation exchange capacity (CEC) of 8 milliequivalents per 100 grams (meq/100g) can be used as a treatment layer beneath a water quality or detention facility. If the soil is amended or imported, the top 8 inches must have a minimum cation exchange capacity of 10 meq/100g and the remainder of the depth no less than 8 meq/100g. An 18-inch layer with the same CEC and OM profile will suffice for ditch conveyances, based on unsaturated flow as a result of alternating wet-dry periods.
2. To demonstrate that in-place soils meet the above criteria, one sample per 1,000 square feet of facility area, or 500 lineal feet of ditch, and no fewer than three samples shall be tested. Each sample shall be a composite of equally spaced subsamples taken throughout the full extent of the treatment layer depth (usually two to six feet below the expected facility invert for facilities), except stratified composite sampling is required where the top 8 inches are required to meet a higher CEC level (composite of top eight inches and separate composite of the remainder below).
3. Organic content shall be measured on a dry weight basis using ASTM D2974.
4. Cation exchange capacity (CEC) shall be tested according to Reference 12-A, Measuring Cation Exchange Capacity.
5. Certification by a soils testing laboratory that imported soil meets the organic content and CEC criteria above shall be provided to the local approval authority.
6. Soil amendment may only be compost meeting the requirements of Reference 11-C. Compost for application of this requirement in stormwater treatment wetlands must be Specification 1 Compost detailed in Reference 11-C.
7. If a treatment liner will be below the seasonal high water level, the pollutant removal performance of the liner must be evaluated by a geotechnical or ground water specialist and found to be as protective as if the liner were above the level of the ground water.

6.2.5 FLOW SPLITTER DESIGNS

Most water quality facilities may be designed as **flow-through, or on-line, systems** with flows above the water quality design flow or volume simply passing through the facility untreated. However, it is sometimes desirable to restrict flows to water quality treatment facilities and bypass the remaining higher flows around them **(off-line facilities)**. This can be accomplished by **splitting flows** in excess of the water quality design flow upstream of the facility and diverting higher flows to a bypass pipe or channel. The bypass typically enters a detention facility or the downstream receiving drainage system, depending on flow control requirements. In most cases, it is a designer's choice whether WQ facilities are designed as on-line or off-line; an exception is oil/water separators, which must be designed off-line.

A crucial factor in designing flow splitters is to ensure that low flows are delivered to the treatment facility up to the **WQ design flow rate**. Above this rate, additional flows are diverted to the bypass system with minimal increase in head at the flow splitter structure to avoid surcharging the water quality facility under high flow conditions.

Flow splitters are typically catch basins or vaults with concrete baffles. In place of baffles, the splitter mechanism may be a half tee section with a solid top and an orifice in the bottom of the tee section. A full tee option may also be used (see "Design Criteria" below). Two possible design options for flow splitters are shown in Figure 6.2.5.A and Figure 6.2.5.B. Other designs that achieve the result of splitting low flows, up to the WQ design flow, into the WQ treatment facility and divert higher flows around the facility may be considered (an adjustment per Section 1.4 may be required upon evaluation by DLS-Permitting staff).

6.2.5.1 METHODS OF ANALYSIS

Flow splitters are modeled with the approved model using the design flow rates as described in Section 6.2.1. The stage/discharge relationship of the outflow pipes should be determined using the backwater analysis techniques in Chapter 4. The orifice shall be sized per Section 5.1.4.2. Weirs should be analyzed as sharp-crested weirs.

6.2.5.2 DESIGN CRITERIA

General

1. A flow splitter shall be designed to deliver the required **water quality design flow rate** specified in Section 6.2.1 (p. 6-17) to the WQ treatment facility.
2. The **top of the weir** shall be located at the water surface for the design flow. Remaining flows enter the bypass line. Flows shall be modeled using 15-minute time steps.
3. The **maximum head** shall be minimized for flow in excess of the water quality design flow. Specifically, flow to the WQ facility at the 100-year water surface shall not increase the design WQ flow by more than 10%.
4. Either design shown in Figure 6.2.5.A (p. 6-34) or Figure 6.2.5.B (p. 6-35) shall be used.
5. Special applications, such as roads, may require the use of a **modified flow splitter**. The baffle wall may be fitted with a notch and adjustable weir plate to proportion runoff volumes other than high flows.
6. For ponding facilities, backwater effects must be included in designing the height of the standpipe in the catch basin.
7. Ladder or step and handhold access (per King County Road standards) shall be provided. If the weir wall is higher than 36 inches, two ladders, one to either side of the wall, are required.

Material Requirements

1. The **splitter baffle** shall be installed in a Type 2 catch basin or vault.
2. The **baffle wall** shall be made of reinforced concrete or another suitable material resistant to corrosion, and have a minimum 4-inch thickness. The minimum clearance between the top of the baffle wall and the bottom of the catch basin cover shall be 4 feet; otherwise, dual access points shall be provided.
3. All **metal parts** shall be corrosion resistant. Examples of preferred materials include aluminum, stainless steel, and plastic. Zinc and galvanized materials, bronze and brass, and cadmium-plated hardware shall not be used unless there is no substitute, because of aquatic toxicity. Painting or other coating of metal parts shall not be allowed because of poor longevity and lack of standardization or assurance of non-toxic coatings.

FIGURE 6.2.5.A FLOW SPLITTER, OPTION A

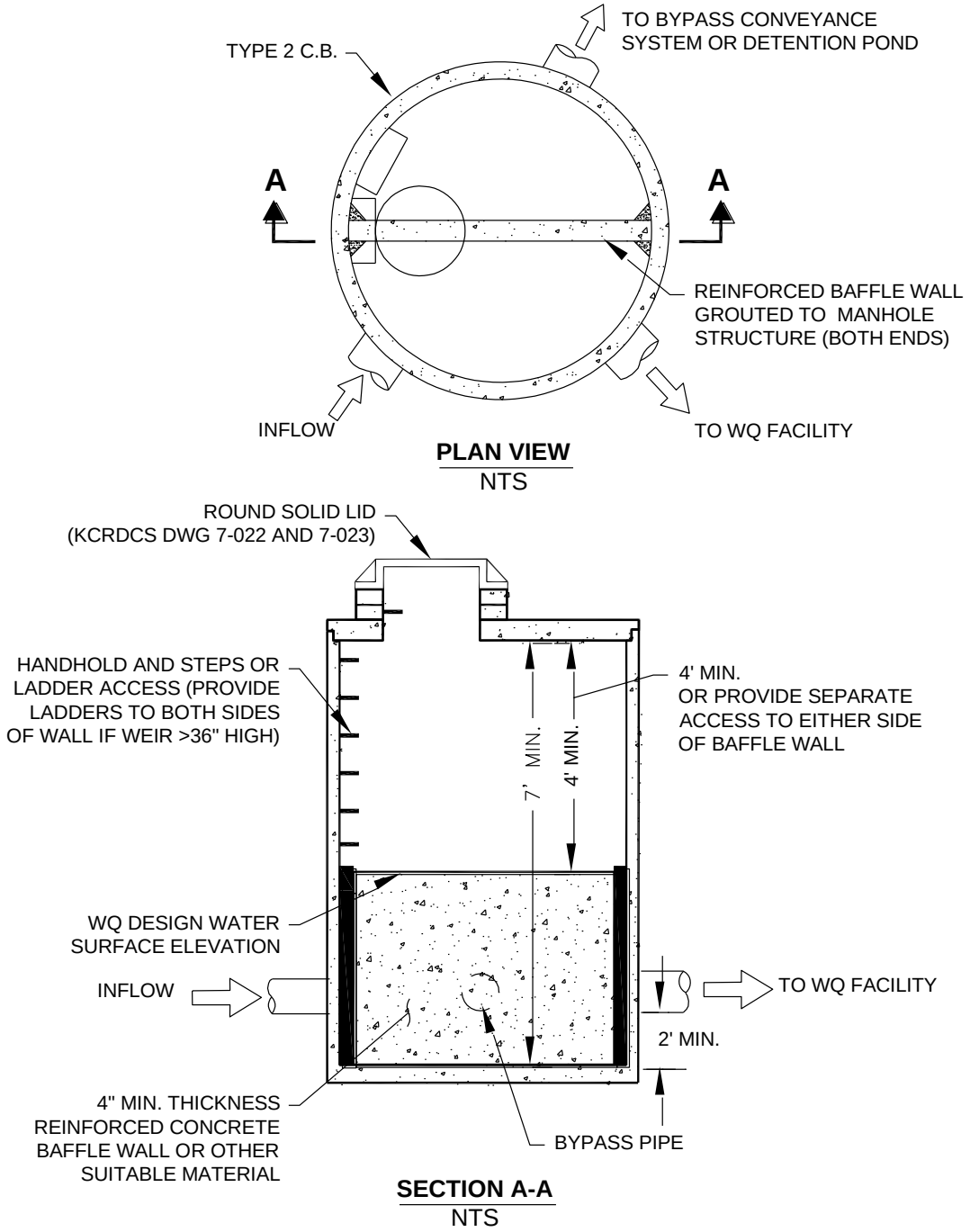

NOTE:
THE WATER QUALITY DISCHARGE PIPE MAY REQUIRE AN ORIFICE PLATE TO BE INSTALLED ON THE OUTLET TO CONTROL THE HEIGHT OF THE DESIGN WATER SURFACE (WEIR HEIGHT). THE DESIGN WATER SURFACE SHOULD BE SET TO PROVIDE A MINIMUM HEADWATER/DIAMETER RATIO OF 2.0 ON THE OUTLET PIPE.

FIGURE 6.2.5.B FLOW SPLITTER, OPTION B

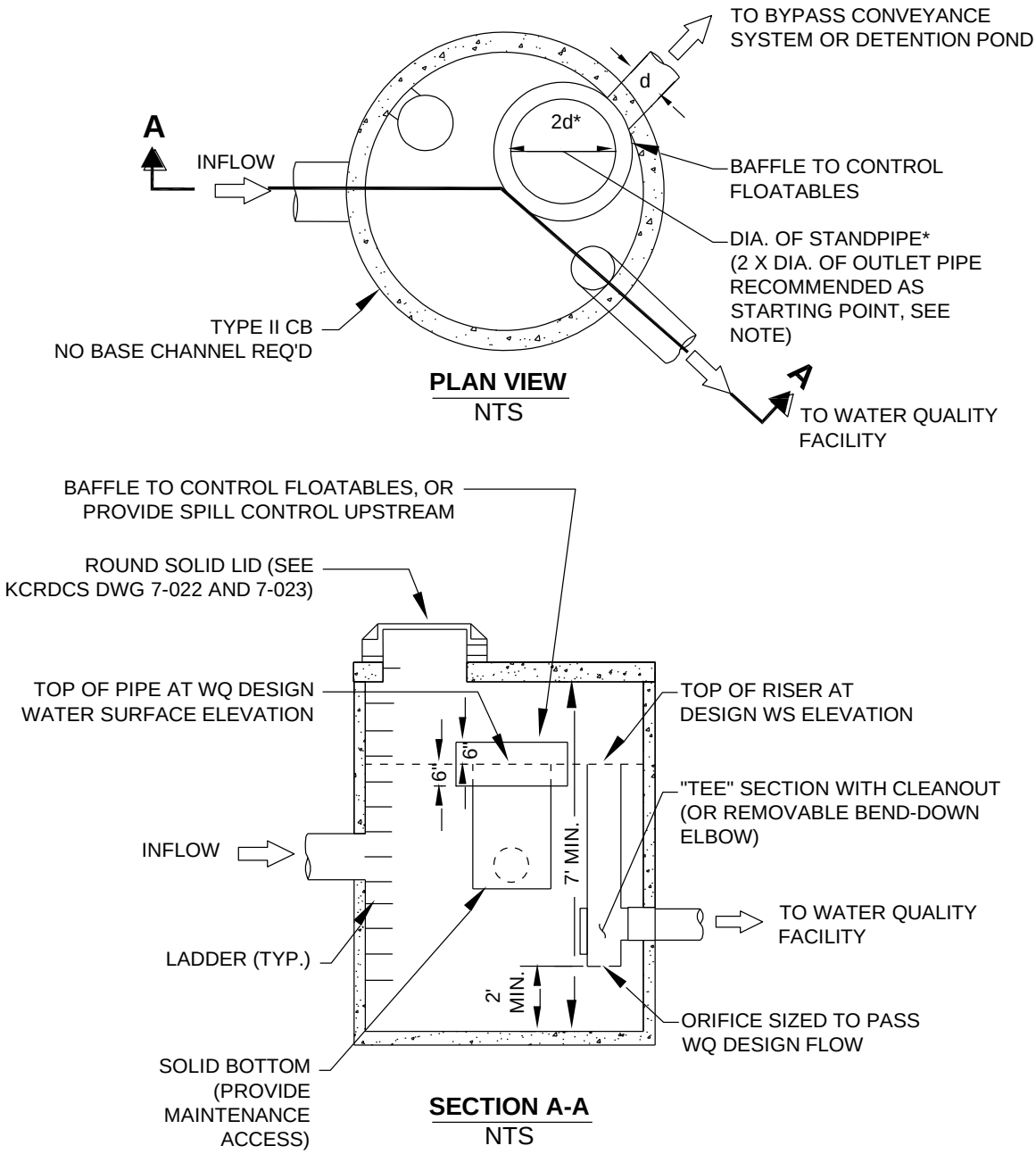

6.2.6 FLOW SPREADING OPTIONS

Flow spreaders function to uniformly spread flows across the inflow portion of water quality facilities (e.g., sand filter, bioswale, or filter strip).

There are five flow spreader options presented in this section:

- Anchored section: Anchored plate or board (Option A)
- Concrete sump box (Option B)
- Notched curb spreader (Option C)
- Through-curb ports (Option D)
- Interrupted curbing (Option E)

Options A through C may be used for spreading flows that are concentrated. Any one of these options may be used when spreading is required by the facility design criteria. Options A through C may also be used for unconcentrated (sheet) flows, and in some cases must be used, such as to correct for moderate grade changes along a filter strip.

Options D and E are only for flows that are already unconcentrated when they enter a filter strip or lateral inflow bioswale. Other flow spreader options are possible with approval from DLS-Permitting.

6.2.6.1 DESIGN CRITERIA FOR FLOW SPREADER OPTIONS

General Design Criteria

1. Flow must not escape around ends or through any breaks in a flow spreader.
2. Where flow enters the flow spreader through a pipe, it is recommended that the **pipe be submerged** to the extent practical to dissipate energy as much as possible.
3. For **higher velocity inflows** (greater than 5 cfs for the 100-yr storm), a Type 1 catch basin should be positioned in the spreader, and the inflow pipe should enter the catch basin with flows exiting through the top grate. The top of the grate should be lower than the level spreader plate, or if a notched spreader is used, lower than the bottom of the v-notches.
4. Table 4.2.2.F in Chapter 4 provides general guidance for rock protection at outfalls.

❑ OPTION A — ANCHORED PLATE OR BOARD (FIGURE 6.2.6.A)

1. An adjustable-level anchored plate or board flow spreader shall be **preceded by a sump** having a minimum depth of 8 inches and minimum width of 24 inches. If not otherwise stabilized, the sump area shall be lined to reduce erosion and to provide energy dissipation.
2. The top surface of the flow spreader plate or board **shall be level**, projecting a minimum of 2 inches above the ground surface of the water quality facility, or **v-notched** with notches 6 to 10 inches on center and 1 to 6 inches deep (use shallower notches with closer spacing). Alternative designs are allowed. The anchored plate or board level shall be adjustable using slotted bolt holes in the anchored plate or board.
3. A flow spreader plate or board shall extend horizontally beyond the bottom width of the facility to prevent water from eroding the side slope. The **horizontal extent** should be such that the bank is protected for all flows up to the 100-year flow or the maximum flow that will enter the WQ facility.
4. Flow spreader plates or boards shall be **securely fixed in place** by bolts through slotted holes for adjustability in establishing and maintaining level.

5. Flow spreader plates or boards may be made of either **wood, metal, fiberglass reinforced plastic, or other durable material**. If wood, untreated 4 by 10-inch cedar heartwood lumber or cedar landscape timbers are acceptable.
6. **Anchor posts** shall be 4-inch square concrete or tubular stainless steel. Other material resistant to decay may be used if approved by DLS-Permitting.

❑ OPTION B — CONCRETE SUMP BOX (FIGURE 6.2.6.B)

1. The **wall of the downstream side** of a rectangular concrete sump box shall extend a minimum of 2 inches above the treatment bed. This serves as a weir to spread the flows uniformly across the bed. The wall shall have an adjustable anchored plate or board as described in Option A above. The adjustable anchored plate or board shall be securely fixed to the concrete wall and meet the same material specifications as described in Option A above.
2. The **downstream wall** of a sump box shall have "wing walls" at both ends. **Side walls and returns** shall be slightly higher than the weir so that erosion of the side slope is minimized.
3. **Concrete** for a sump box may be either cast-in-place or precast, but the bottom of the sump shall be reinforced with wire mesh for cast-in-place sumps.
4. Sump boxes shall be placed over bases that consists of 4 inches of crushed rock, $^{5}/_{8}$-inch minus to help assure the sump remains level.

❑ OPTION C — NOTCHED CURB SPREADER (FIGURE 6.2.6.C)

Notched curb spreader sections shall be made of extruded concrete laid side by side and level. Typically five "teeth" per four-foot section provide good spacing. The space between adjacent "teeth" forms a v-notch.

❑ OPTION D — THROUGH-CURB PORTS (FIGURE 6.2.6.D)

Sheet flows from paved areas entering filter strips or lateral inflow bioswales may use curb ports or interrupted curbs (Option E) to allow flows to enter the strip or swale. Curb ports use fabricated openings that allow concrete curbing to be poured or extruded while still providing an opening through the curb to admit water to the WQ facility.

Openings in the curb shall be at regular intervals but at least every 6 feet (minimum). The width of each curb port opening shall be a minimum of 11 inches. Approximately 15 percent or more of the curb section length should be in open ports, and no port should discharge more than about 10 percent of the flow.

❑ OPTION E — INTERRUPTED CURB (NO FIGURE)

Interrupted curbs are sections of curb placed to have gaps spaced at regular intervals along the total width (or length, depending on facility) of the treatment area. At a minimum, **gaps** shall be every 6 feet to allow distribution of flows into the treatment facility before they become too concentrated. The opening shall be a minimum of 11 inches. As a general rule, no opening should discharge more than 10 percent of the overall flow entering the facility.

FIGURE 6.2.6.A FLOW SPREADER OPTION A: ANCHORED PLATE

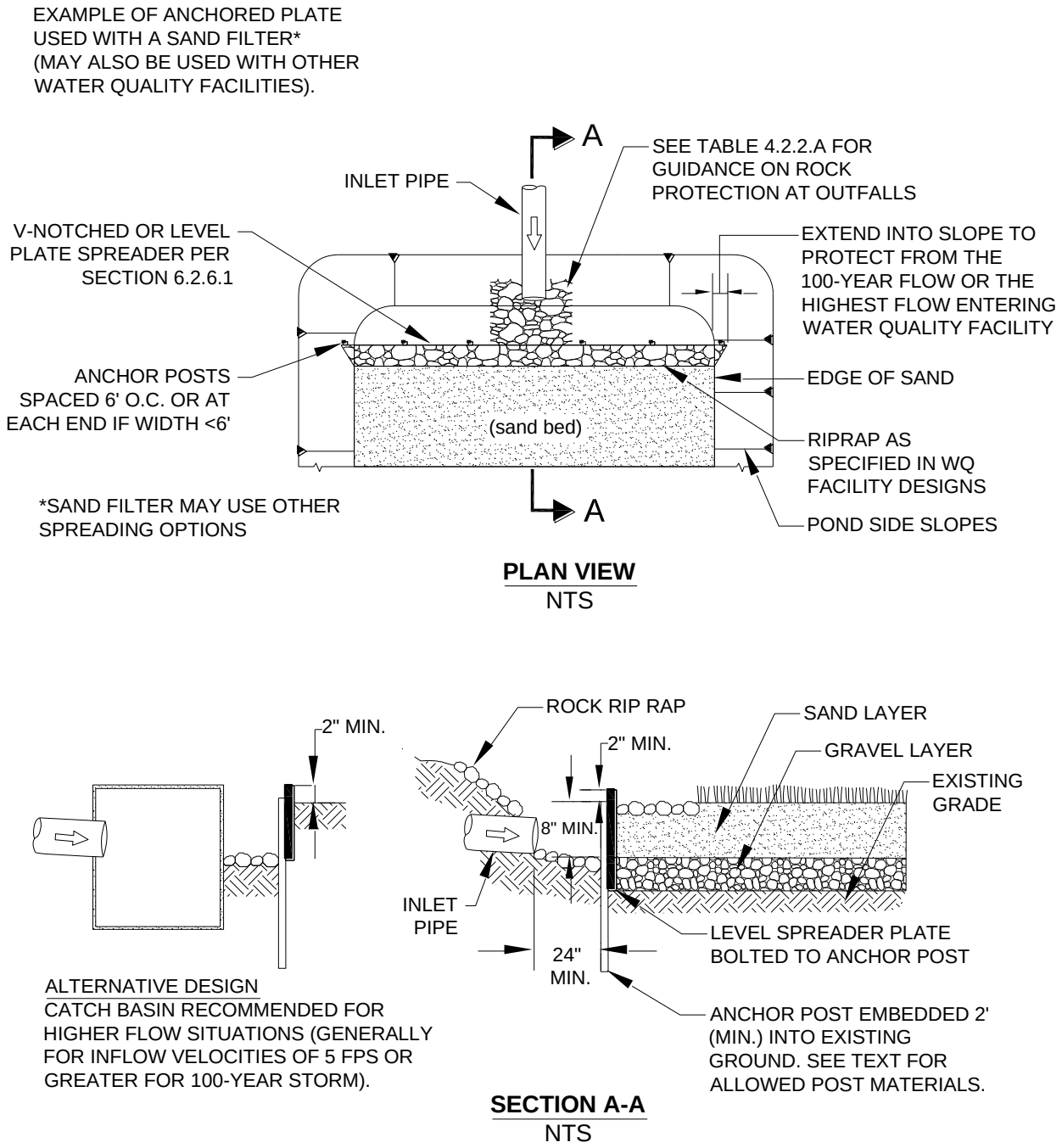

FIGURE 6.2.6.B FLOW SPREADER OPTION B: CONCRETE SUMP BOX

EXAMPLE OF A CONCRETE SUMP FLOW SPREADER USED WITH A BIOFILTRATION SWALE (MAY BE USED WITH OTHER WQ FACILITIES)

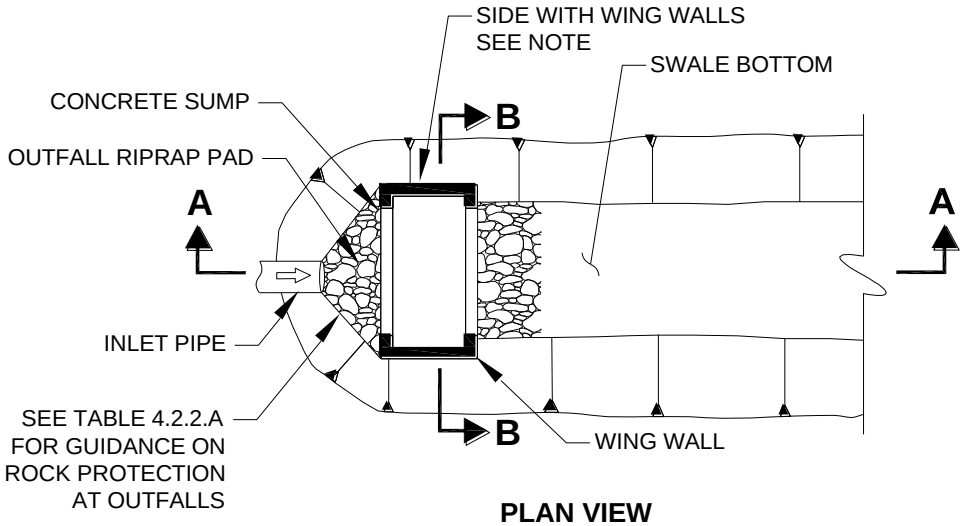

PLAN VIEW
NTS

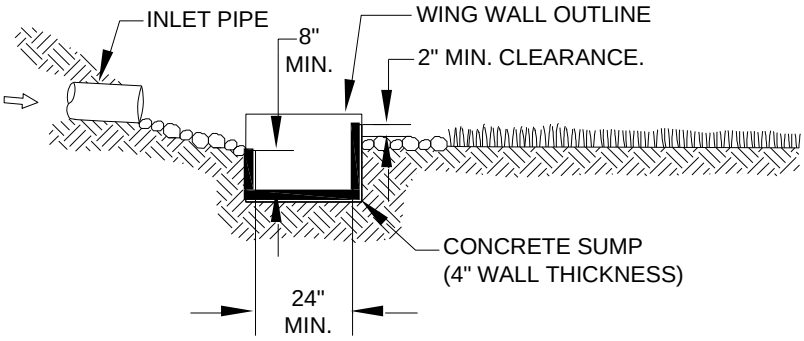

SECTION A-A
NTS

NOTE:
EXTEND SIDES INTO SLOPE. HEIGHT OF SIDE WALL AND WING WALLS MUST BE SUFFICIENT TO HANDLE THE 100-YEAR FLOW OR THE HIGHEST FLOW ENTERING THE FACILITY.

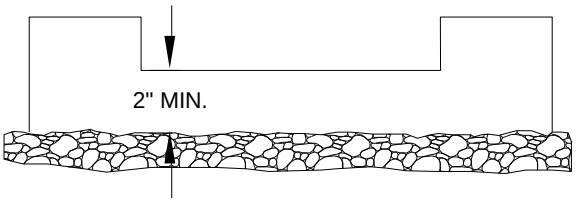

SECTION B-B
NTS

FIGURE 6.2.6.C FLOW SPREADER OPTION C: NOTCHED CURB SPREADER

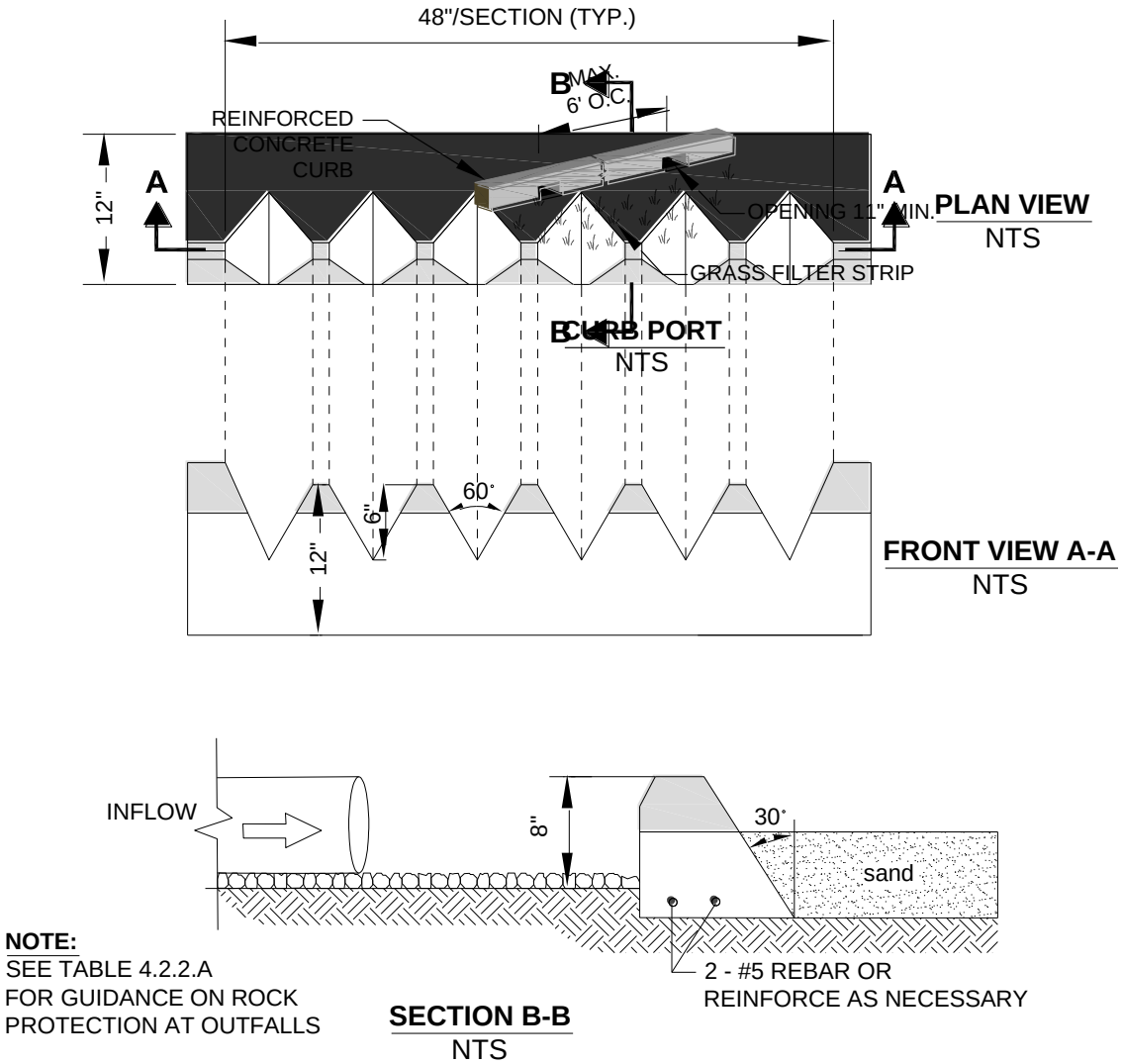

NOTE:
SEE TABLE 4.2.2.A
FOR GUIDANCE ON ROCK
PROTECTION AT OUTFALLS

FIGURE 6.2.6.D FLOW SPREADER OPTION D: THROUGH-CURB PORT

6.3 VEGETATED FLOWPATH FACILITY DESIGNS

This section presents the methods, details of analysis, and design criteria for bioswales and filter strips. Included in this section are the following specific facility designs:

- Basic Bioswales, Section 6.3.1 (p. 6-41)
- Wet Bioswales, Section 6.3.2 (p. 6-57)
- Lateral Inflow Bioswales, Section 6.3.3 (p. 6-60)
- Standard Filter Strips, Section 6.3.4 (p. 6-61)
- Narrow Area Filter Strips, Section 6.3.5 (p. 6-68)

General Considerations

Vegetated flowpath facilities are subject to a number of concerns that do not affect other facilities. Failure mechanisms can include adverse change in plant community, vegetation loss, erosion or channelization, detrimental change in slope or cross-section from siltation, and ponding. The relationship between the surface soil, subsurface soil, groundwater interactions, vegetation type, weather, and shading all contribute to the success or failure of a vegetated flowpath facility. Successful establishment of vegetation requires seeding or planting at a time of year that ensures optimal moisture and temperature/sunlight for growth. Maintenance requires mowing, mechanical weed control, and silt removal (e.g., in the bed of a bioswale, or to remove a 'micro-berm' forming at the entry edge of a filter strip), which may require re-planting. While there is initial control over vegetation type, the plant community can change on its own over time, and soil profile and content can change over time (compaction from mowing, siltation, holes from voles, etc.). Solutions are site-specific, may require seasonal observation, covering the full range of climatic conditions, and even then, something that works in a normal rainfall year may not to work in an excessively dry or wet year.

The information presented for each facility is organized into the following two categories:

1. **Methods of Analysis:** Contains a step-by-step procedure for designing and sizing each facility.
2. **Design Criteria:** Contains the details, specifications, and material requirements for each facility, plus construction and maintenance considerations as applicable.

6.3.1 BASIC BIOSWALES

A *bioswale* is an open, gently sloped, vegetated channel designed for treatment of stormwater (see the details in Figure 6.3.1.A through Figure 6.3.1.E beginning on page 6-54). The primary pollutant removal mechanism is sedimentation enhanced by grass blades and to a lesser extent by potential trapping and adhesion of pollutants to the grass and thatch. Bioswales generally do not remove dissolved pollutants effectively, although some infiltration to underlying soils may occur depending on the nature of those soils and any required facility liners.

Applications and Limitations

Data suggest that the performance of bioswales is highly variable from storm to storm. Ecology and King County recommend considering other treatment methods that perform more consistently, such as sand filters or wet ponds, before using a bioswale.

A bioswale is designed so that water will flow evenly across the entire width of a densely-vegetated area. A swale may be designed for both treatment and conveyance of onsite stormwater flow. This combined use can reduce development costs by eliminating the need for separate conveyance systems.

Bioswales are best applied on a relatively small scale (generally less than 5 acres of impervious surface). They fit well along roadways, driveways, and parking lots. Swales are more costly to apply in situations where the swale channel would be deep; in deep swales, self-shading can inhibit the necessary grass growth, resulting in poor pollutant removal performance. Some specific considerations for bioswale applications are as follows:

- A bioswale **shall not be located in a shaded area**. For healthy vegetation growth, a swale should receive a minimum of 6 hours sunlight daily throughout the year, throughout the length of the swale. .
- To maintain healthy grass growth, a **basic bioswale must dry between storms**. It shall not receive continuous base flows (such as seepage from a hill slope throughout the winter) or be located in a high groundwater area, because saturated soil conditions will kill grass. If these conditions are likely to occur, design options given under "Design Criteria" (p. 6-46) shall be used, or the wet bioswale design may be used (see Section 6.3.2, p. 6-57, for details).
- Stormwater runoff carrying **high concentrations of oil and grease** kills vegetation and impairs the treatment capability of a swale. Where a ***high use site*** is tributary to a proposed bioswale, an oil control facility option listed in Section 6.6 (p. 6-133) shall be installed to treat the subject runoff prior to entering the bioswale.
- **Modifying an existing drainage ditch** to create an engineered bioswale may be difficult due to physical constraints and because ditches often serve as conveyance for higher flows from larger offsite areas.
- **Utilities** may be located in swale side slopes above the WQ design depth. However, the repair or placement of utilities in swale side slopes requires aggressive implementation of erosion control practices to prevent soil and sediment from reaching the treatment area of the swale.

Note: Consult the water quality menus in Section 6.1 (p. 6-3) for information on how this facility may be used to meet Core Requirement # 8. Also see Table 6.1.1.A on page 6-6 for guidance on which type of bioswale (basic, wet or lateral inflow) to use for a given set of ***site*** *characteristics.*

6.3.1.1 METHODS OF ANALYSIS

Bioswale sizing is based on several variables, including the peak water quality design flow, longitudinal slope, vegetation height, bottom width, side slope, required hydraulic residence time (i.e., the time required for flow to travel the full length of the swale), and design flow depth. Swales sized and built using the method of analysis outlined in this section and the required design criteria presented in Section 6.3.1.2 are expected to meet the Basic Water Quality menu goal of 80% TSS removal. Procedures for sizing bioswales are summarized below.

Step 1: Calculate design flows. The swale design is based on the water quality design flow Q_{wq} (see Section 6.2.1, p. 6-17, for a definition of water quality design flow). If a bioswale is used for conveyance, the capacity requirements of Core Requirement #4 must be met. These flows must be estimated using the hydrologic analysis procedures described in detail in Chapter 3 and applying the flow rate modifications described in Section 6.2.1.

If the bioswale is located **upstream** of an onsite detention facility, or if a detention facility is not required, the bioswale design flow shall be the *on-line* or *off-line* (as applicable) water quality flow rate determined from the approved continuous model, modified by a factor *k*, the on-line or off-line ratio determined from Table 6.2.1. This modified design flow rate is an estimate of the design flow rate determined by using SBUH procedures.

***Guidance for Bypassing Off-line Facilities*:**

Most bioswales are currently designed to be on-line facilities. However, an off-line design is possible. Bioswales designed in an off-line mode should not engage a bypass until the flow rate exceeds the modified off-line water quality design flow rate.

If the bioswale is located downstream of an onsite detention facility, the swale design flow shall be the 2-year release rate from the detention facility.

Step 2: Calculate swale bottom width. The swale bottom width is calculated based on Manning's equation for open-channel flow. This equation can be used to calculate discharges as follows:

$$Q = \frac{1.49}{n} A R^{0.67} s^{0.5} \tag{6-3}$$

where
- Q = flow rate (cfs)
- n = Manning's roughness coefficient (unitless)
- A = cross-sectional area of flow (sf)
- R = hydraulic radius (ft) = area divided by wetted perimeter
- s = longitudinal slope (along direction of flow) (ft/ft)

For shallow flow depths in swales, channel side slopes are ignored in the calculation of bottom width. Use the following equation (a simplified form of Manning's formula) to estimate the required swale bottom width:

$$b = \frac{Q_{wq} n_{wq}}{1.49 y^{1.67} s^{0.5}} \tag{6-4}$$

where
- b = bottom width of swale (ft)
- Q_{wq} = the *modified* water quality design flow, k(Q, modeled on-line or off-line rate), (cfs)
  where k = correlation ratio determined from Table 6.2.1.A
- n_{wq} = Manning's roughness coefficient for shallow flow conditions = 0.20 (unitless)
- y = design flow depth (ft)
- S = longitudinal slope (along direction of flow) (ft/ft)

See "Water Depth and Base Flow" (p. 6-47) to determine the allowable design water depth. Proceed to Step 3 if the bottom width is calculated to be between 2 and 10 feet.

A minimum 2-foot bottom width is required. Therefore, if the calculated bottom width is less than 2 feet, increase the width to 2 feet and recalculate the design flow depth y using Equation (6-5) as follows:

$$y = \left(\frac{Q_{wq} n_{wq}}{1.49 s^{0.5} b} \right)^{3/5} \tag{6-5}$$

where Q_{wq}, n_{wq}, and s are the same values as used in Equation (6-4), but b = 2 feet.

The maximum bottom width is 10 feet; therefore if the calculated bottom width exceeds 10 feet, then one of the following steps is necessary to reduce the design bottom width:

- Increase the longitudinal slope S to a maximum of 6 feet in 100 feet (0.06 feet per foot).
- Increase the design flow depth y to a maximum of 4 inches (0.333 feet).
- Reduce the design flow rate by rearranging the swale location with respect to detention facilities; a swale located downstream of a detention facility may have a lower flow rate due to flow attenuation in the detention facility. However, if a swale is located downstream of a detention facility providing Level 2 or Level 3 flow control, and it is located in till soils (according to the soil groups in Table 3.2.2.A), then the swale must be designed as a wet bioswale (see Section 6.3.2, p. 6-57).

- Place a divider lengthwise along the swale bottom (cross section) at least three-quarters of the swale length (beginning at the inlet), without compromising the design flow depth and swale lateral slope requirements. See "Design Criteria" (p. 6-46) for swale divider requirements. A flow spreader must be provided at the inlet to evenly divide flows into each half of the swale cross section. See Section 6.2.6 (p. 6-36) for details on flow spreaders.

Step 3: Determine design flow velocity. To calculate the design flow velocity through the swale, use the flow continuity equation:

$$V_{wq} = \frac{Q_{wq}}{A_{wq}} \tag{6-6}$$

where V_{wq} = design flow velocity (fps)
A_{wq} = $by + Zy^2$ = cross-sectional area (sf) of flow at design depth
Z = side slope length per unit height (e.g., $Z = 3$ if side slopes are 3H:1V)

If the design flow velocity exceeds 1 foot per second, go back to Step 2 and modify one or more of the design parameters (longitudinal slope, bottom width, or flow depth) to reduce the design flow velocity to 1 foot per second or less. If the design flow velocity is calculated to be less than 1 foot per second, proceed to Step 4. *Note: It is desirable to have the design velocity as low as possible, both to improve treatment effectiveness and to reduce swale length requirements.*

Step 4: Calculate swale length. Use the following equation to determine the necessary swale length to achieve a hydraulic residence time of at least 9 minutes (540 seconds):

$$L = 540 V_{wq} \tag{6-7}$$

where L = minimum allowable swale length (ft)
V_{wq} = design flow velocity (fps)

The minimum swale length is 100 feet; therefore, if the swale length is calculated to be less than 100 feet, increase the length to a minimum of 100 feet, leaving the bottom width unchanged. If a larger swale could be fitted on the ***site***, consider using a greater length to increase the hydraulic residence time and improve the swale's pollutant removal capability. If the calculated length is too long for the ***site***, or if it would cause layout problems, such as encroachment into shaded areas, proceed to Step 5 to further modify the layout. If the swale length can be accommodated on the ***site***, proceed to Step 6.

Step 5: Adjust swale layout to fit on site. If the swale length calculated in Step 4 is too long for the ***site***, the length may be reduced (to a minimum of 100 feet) by increasing the bottom width up to a maximum of 16 feet, **as long as the 9 minute retention time is retained**. However, the length cannot be increased in order to reduce the bottom width because Manning's depth-velocity-flow rate relationships would not be preserved. If the bottom width is increased to greater than 10 feet, a low dividing berm is needed to split the swale cross section in half.

Length can be adjusted by finding the top area of the swale and providing an equivalent top area with the adjusted dimensions.

a) Calculate the swale treatment top area based on the swale length calculated in Step 4:

$$A_{top} = (b_i + b_{slope})\, L_i \tag{6-8}$$

where A_{top} = top area (sf) at the design treatment depth
b_i = bottom width (ft) calculated in Step 2

b_{slope} = the additional top width (ft) above the side slope for the design water depth (for 3:1 side slopes and a 4-inch water depth, b_{slope} = 2 feet)
L_i = initial length (ft) calculated in Step 4.

b) Use the swale top area and a reduced swale length L_f to increase the bottom width, using the following equation:

$$L_f = \frac{A_{top}}{(b_f + b_{slope})} \tag{6-9}$$

where L_f = reduced swale length (ft)
b_f = increased bottom width (ft).

c) Recalculate V_{wq} according to Step 3 using the revised cross-sectional area A_{wq} based on the increased bottom width b_f. Revise the design as necessary if the design flow velocity exceeds 1 foot per second.

d) Recalculate to assure that the 9 minute retention time is retained.

Step 6: Provide conveyance capacity for flows higher than Q_{wq}. Bioswales may be designed as flow-through channels that convey flows higher than the water quality design flow rate, or they may be designed to incorporate a high-flow bypass upstream of the swale inlet. A high-flow bypass usually results in a smaller swale size (see flow splitter options, page 6-32, for more information on designing bypasses). If a high-flow bypass is provided, this step is not needed. If no high-flow bypass is provided, proceed with the procedure below.

a) Check the swale sized using Steps 2 through 5 above to determine whether the swale can convey the 25-year and 100-year peak flows consistent with the conveyance requirements of Core Requirement #4 in Chapter 1. The roughness coefficient *n* in Manning's equation shall be selected to reflect the deeper flow conditions with less resistance provided by grass during these high-flow events. The bottom width (Step 2) should be calculated as per Section 4.4.1.2, "Methods of Analysis" for open channels.

b) The 100-year peak flow velocity ($V_{100} = Q_{100}/A_{100}$) based on the 100-year flow depth must be less than 3.0 feet per second. If V_{100} exceeds 3.0 feet per second, return to Step 2 and increase the bottom width or flatten the longitudinal slope as necessary to reduce the 100-year peak flow velocity to 3.0 feet per second or less. If the longitudinal slope is flattened, the swale bottom width must be recalculated (Step 2) and meet all design criteria.

c) The conveyance requirements in Core Requirement #4 (see Section 1.2.4) must be met.

6.3.1.2 DESIGN CRITERIA

An effective bioswale achieves uniform sheet flow over and through a densely vegetated area for a period of several minutes. Figure 6.3.1.A (p. 6-54) shows a typical bioswale schematic. Basic design requirements for achieving proper flow conditions through a bioswale are described below.

Swale Geometry

1. Swale **bottom width** shall be between 2 and 16 feet.[25]
   a) **Minimum bottom width** is 2 feet to allow for ease of mowing.
   b) If the bottom width exceeds 10 feet, a length-wise divider shall be provided. The divider shall extend from the flow spreader at the inlet for at least three-quarters of the swale length.
   c) **Maximum bottom width** is 16 feet, excluding the width of the divider.

   Note: Multiple swales may be placed side by side provided the flow to each swale is split at the inlet and spread separately for each swale. Adjacent swales may be separated with a vertical wall, but a low berm is preferred for easier maintenance and better landscape integration.
2. The **longitudinal slope** (along the direction of flow) should be between 1.5 percent and 6 percent.
   a) If the longitudinal slope is less than 1.5 percent, underdrains must be provided (see next page and Figure 6.3.1.C, p. 6-55, for underdrain specifications) or the swale must be designed according to the criteria presented in Section 6.3.2 (p. 6-57) for **wet bioswales**.

      Wet bioswales in outwash soils and low groundwater conditions are discouraged as plant survival may be compromised.
   b) If the longitudinal slope exceeds 6 percent, **check dams** with vertical drops of 12 inches or less shall be provided to achieve a bottom slope of 6 percent or less between the drop sections.
3. The swale bottom shall be **flat** in cross section (perpendicular to the flow direction) to promote even flow across the whole width of the swale.
4. The **minimum swale length** shall be 100 feet; no maximum length is set.
5. The **swale treatment area** (below the WQ design water depth) shall be trapezoidal in cross-section. S**ide slopes within the treatment area** should be 3H:1V or flatter whenever possible, but shall not steeper than 2H:1V.
6. **Side slope sections above the treatment area** may be steeper than 3H:1V, subject to the following provisions:
   a) If there is an interior side slope between 1H:1V and 2H:1V outside the treatment area, the slope shall be reinforced with **erosion control netting or matting** during construction.
   b) Any interior slope steeper than 1H:1V shall be constructed as a **rockery or structural retaining wall**[26] to prevent the swale slope from sloughing. To ensure that adequate sunlight reaches the swale bottom, **only one wall can be taller than 2 feet.** If possible, the higher wall should be on the northern or eastern side of the swale to maximize the amount of light reaching the swale bottom.

---

[25] Experience with biofiltration swales shows that when the width exceeds about 10 feet it is difficult to keep the water from forming low-flow channels. It is also difficult to construct the bottom level and without sloping to one side. Biofilters are best constructed by leveling the bottom after excavating, and after the soil is amended. A single-width pass with a front-end loader produces a better result than a multiple-width pass.

[26] Soil bioengineering techniques may be used as an alternative to a rockery or structural retaining wall.

7. **Curved swales** are encouraged for aesthetic reasons, but curves must be gentle to prevent erosion and allow for vehicle access to remove sediment. Criteria for maintenance access road curves shall also be applied for swale curves (see Section 5.1.1.1 for design of access roads).

Water Depth and Base Flow

1. A swale that will be **frequently mowed**, as in commercial or landscaped areas, shall have a **design water depth** of no more than 2 inches (0.17 feet) under the water quality design flow conditions.
2. A swale that will **not be frequently mowed**, such as along roadsides or in rural areas, shall have a **design water depth** of no more than 4 inches (0.33 feet) under the water quality design flow conditions.
3. If a swale is located **downstream of a detention facility providing Level 2 or Level 3 flow control**, and it is located in till soils (according to the soil groups in Table 3.2.2.B, Chapter 3), then the swale must be designed as a **wet bioswale** (see Section 6.3.2, p. 6-57).
4. If a swale will receive **base flows** because of seeps and springs onsite, then either a low-flow drain shall be provided or a wet bioswale shall be used. *Low-flow drains* are narrow surface drains filled with pea gravel that run lengthwise through the swale to bleed off base flows; they should not be confused with underdrains. In general, base flows less than 0.01 cfs per acre can be handled with a low-flow drain. If flows are likely to be in excess of this level, a wet bioswale shall be used.
5. If a **low-flow drain** is used, it shall extend the entire length of the swale. The drain shall be a minimum of 6 inches deep, and its width shall be no greater than 5 percent of the calculated swale bottom width; the width of the drain shall be in addition to the required bottom width. If an anchored plate or concrete sump is used for flow spreading at the swale inlet, the plate or sump wall shall have a v-notch (maximum top width = 5% of swale width) or holes to allow preferential exit of low flows into the drain. See Figure 6.3.1.D (p. 6-56) for low-flow drain specifications and details.

Flow Velocity, Energy Dissipation, and Flow Spreading

1. The **maximum flow velocity** through the swale under the water quality design flow conditions shall not exceed 1.0 foot per second.
2. The **maximum flow velocity** through the swale under the peak 100-year flow conditions shall not exceed 3.0 feet per second.
3. A **flow spreader** shall be used at the inlet of a swale to dissipate energy and evenly spread runoff as sheet flow over the swale bottom. Flow spreaders are recommended but not required at mid-length. For details on various types of flow spreaders, see Section 6.2.6 (p. 6-36).
4. If **check dams** are used to reduce the longitudinal slope of the swale, a **flow spreader** shall be provided at the toe of each vertical drop. The spreader must span the width of the swale. An **energy dissipater** shall also be provided if flows leaving the spreader could be erosive.
5. If a swale **discharges flows to a slope** rather than to a piped system or confined channel, an **energy dissipater** shall be provided at the swale outlet. This requirement also applies to discharges from swale underdrains. The outlet energy dissipater may be a riprap pad sized according to the specifications described in Table 4.2.2.A for conveyance system outfalls.

Underdrains

If underdrains are required by Criterion 2 under "Swale Geometry" (p. 6-46), they must meet the following criteria:

1. Underdrains must be made of **PVC perforated pipe** (SDR 35), laid parallel to the swale bottom and backfilled and bedded as shown in Figure 6.3.1.C (p. 6-55).
2. For facilities to be maintained by the County, the underdrain pipe must be 6 inches or greater in **diameter**. (Six inches is the smallest diameter pipe that can be cleaned without damage to the pipe.)

3. Six inches of clean **drain rock** ($^5/_8$-inch minus) must be above the top of the pipe.
4. The drain rock must be wrapped in **geotextile**. See WSDOT Standard Specifications (2014), 9-33.2(1) Geotextile Properties / Table 1 / Moderate Survivability / Woven, and Table 2, Class A
5. The underdrain **must drain freely** to an acceptable discharge point.

Swale Divider

1. If a swale divider is used (such as when swale bottom widths are greater than 10 feet), the divider shall be constructed of a **firm material** that will resist weathering and not erode, such as concrete, compacted soil seeded with grass, untreated heartwood cedar, or untreated whole de-barked cedar logs. Selection of divider material shall take into consideration swale maintenance, especially mowing.
2. The divider shall have a **minimum height** of one inch higher than the water quality design water depth.
3. **Earthen berms** shall be no steeper than 2H:1V.
4. Materials other than earth (e.g. concrete, untreated heartwood cedar lumber, etc.) shall be embedded to a depth sufficient to be stable.

Access

1. For swales to be maintained by King County, an **access road** shall be provided to the swale inlet and along one side of the swale according to the schedule shown in Table 6.3.1.B below. *Note: County streets and paved parking areas adjacent to the top of slope may be counted as access.*

TABLE 6.3.1.B REQUIREMENTS FOR BIOSWALE ACCESS ROAD

Swale Bottom Area*: *L* x *w* (sf)	Access Road Length
200 - 1000	$^1/_2$ swale length L
1000 - 1600	$^2/_3$ swale length L
Over 1600	entire swale length L

* The swale area used for computing access road length may be the bottom area.

2. In areas outside critical area buffers, **wheel strips** made of modular grid pavement may be built into the swale bottom for maintenance vehicle access instead of an access road. The subgrade for the strips must be engineered to support a vehicle weight of 16,000 pounds and installed according to the manufacturer's recommendations on firm native soil or structural fill, not on the amended topsoils. Each strip shall be 18 inches wide and spaced as shown in Figure 6.3.1.E (p. 6-56). The strip lattice should be filled or covered with native soil (no amendments required) and overseeded with grass. If a low-flow drain is also needed (see "Water Depth and Base Flow" on page 6-47), a portion of the wheel strip may be filled with pea gravel as appropriate to form the drain. Continuous vehicle access shall be provided to the wheel strips from the access road. If access to the wheel strips is over the flow-spreader, then a grate (or other DLS-Permitting approved method) shall be placed over the flow-spreader for vehicle access. Wheel strips shall not be counted as treatment area; therefore, the swale bottom width must be increased accordingly.

Soil Amendment

1. If the soil has an organic content of 1 percent or greater, do not amend. If the soil has an organic content of less than 1%, two inches of **well-rotted compost** shall be tilled into the entire swale treatment area. This applies to both till soils as well as sandy soils. In very coarse soils (gravels or coarser), **top soil** must be imported and amended to the required organic content.

   a) Compost must be tilled into the underlying native soil to a depth of 6 inches to prevent the compost from being washed out and to avoid creating a defined layer of different soil types that can prevent downward percolation of water.

   b) Compost must meet Specification 1 described in Reference 11-C.

2. **Soil or sod** with a clay content of greater than 10 percent should be avoided. If there is concern for contamination of the underlying groundwater, the swale bottom shall be lined with a treatment liner to prevent groundwater contamination. See "Facility Liners", Section 6.2.4 (p. 6-27), for details on treatment liner options.

Planting Requirements

1. Grass shall be established throughout the entire treatment area of the swale subject to the following provisions:

   a) **Seeding** is best performed in spring (mid-March to June) or fall (late September to October). For summer seeding, sprinkler systems or other measures for watering the grass seed must be provided.

   b) Seed may be applied via **hydroseeding** or broadcast application.

   c) **Irrigation** is required during the first summer following installation if seeding occurs in spring or summer. Swales seeded in the fall may not need irrigation. However, the maintenance and defect financial guarantee will not be released unless a healthy grass cover is established. Therefore, ***site*** planning should address the need for sprinklers or other means of irrigation.

2. Swale treatment areas are subject to both dry and wet conditions, as well as accumulation of sediment and debris. A mixture of dry-area and wet-area grass species that can continue to grow through silt deposits is most effective. Two acceptable **grass seed mixes** for the King County area are listed in Table 6.3.1.C (p. 6-50). The mixes shall be applied throughout the swale in the treatment area at a rate of 80 pounds per acre. As an alternative to these mixes, a horticultural or erosion control specialist may develop a seed specification tailored to the ***site***. Table 6.3.1.D (p. 6-50) lists grasses or other plants particularly tolerant of wet conditions. Some of these seed types, however, may not be commercially available.

3. A newly constructed swale shall be **protected from stormwater flows until grass has been established**. This may be done by diverting flows or by covering the swale bottom with clear plastic until the grass is well rooted. If these actions are not feasible, an erosion control blanket shall be placed over the freshly applied seed mix. See detached Appendix D, *ESC Standards*, for details on erosion control blankets.

4. **Above the design treatment elevation**, either a typical lawn seed mix or landscape plants may be used. However, for swales also used to convey high flows, consideration shall be given to the soil binding capacity of the vegetation. Acceptable grasses and groundcovers are presented in Table 6.3.1.E (p. 6-51). Plant material other than that given in the table may be used if the swale is privately maintained and the plants selected will not spread into the swale treatment area. Ivy shall not be used because of its tendency to spread. Native plant species (e.g., kinnikinnick) are preferred.

Note: These recommendations are for the King County area. If these designs are used in other areas, local knowledge should be used to tailor these recommendations to local conditions.

5. **Sod** may be used as a temporary cover during the wet season, but sodded areas must be reseeded with a suitable grass seed mix as soon as the weather is conducive to seed germination, unless the sod is grown from a seed mix suitable for the wetter conditions of a bioswale. Sod must be removed or rototilled into the underlying soil before reseeding. Criteria #1 and 2 above for seeding shall then be followed.

TABLE 6.3.1.C
GRASS SEED MIXES SUITABLE FOR BIOSWALE TREATMENT AREAS

Mix 1		**Mix 2**	
75-80 percent	Tall or Meadow Fescue	60-70 percent	Tall Fescue
10-15 percent	Seaside Creeping Bentgrass or Colonial Bentgrass	10-15 percent	Seaside Creeping Bentgrass or Colonial Bentgrass
5-10 percent	Redtop	10-15 percent	Meadow Foxtail
		6-10 percent	Alsike Clover
		1-5 percent	Marshfield Big Trefoil
		1-6 percent	Redtop
Note: All percentages are by weight.			

TABLE 6.3.1.D FINELY-TEXTURED PLANTS TOLERANT OF FREQUENT SATURATED SOIL CONDITIONS OR STANDING WATER

Grasses		**Wetland Plants**	
Water Foxtail	*Alopecurus geniculatus*	Sawbeak Sedge	*Carex stipata*
Shortawn Foxtail	*Alopecurus aequalis*	Spike Rush	*Eleocharis palustris*
Bentgrass	*Agrosits* spp.	Slender Rush	*Juncus tenuis*
Spike Bentgrass	*A. exarata*	Grass-leaf rush	*Juncus marginatus*
Redtop	*A. alba* or *gigantea*		
Colonial Bentgrass	*A. tenuis* or *capillaris*		
Mannagrass	*Glyceria* spp.		
Western	*G. occidentalis*		
Northern	*G. borealis*		
Slender-Spiked	*G. leptostachya*		
Rough-Stalked Bluegrass	*Poa trivialis*		
Velvet Grass	*Holcus mollis*		

TABLE 6.3.1.E GROUNDCOVERS AND GRASSES SUITABLE FOR THE UPPER SIDE SLOPES OF A BIOSWALE	
Groundcovers	
Kinnikinnick*	*Arctostaphylos uva-ursi*
Epimedium	*Epimedium grandiflorum*
—	*Euonymus lanceolata*
Strawberry*	*Fragaria chiloensis*
—	*Genista*
St. John's-Wort	*Hypericum sempervirens*
Broadleaf Lupine*	*Lupinus latifolius*
White Sweet Clover*	*Melilotus alba*
Creeping Forget-Me-Not	*Omphalodes verna*
—	*Rubus calycinoides*
White Lawn Clover	*Trifolium repens*
Yellow-Root	*Xanthorhiza simplissima*
Grasses (drought-tolerant, minimum mowing)	
Buffalo Grass	*Buchloe dactyloides*
Tufted Fescue	*Festuca amethystina*
Tall Fescue *	*Festuca arundinacea*
Hard Fescue	*Festuca ovina duriuscula* (e.g., Reliant, Aurora)
Red Fescue*	*Festuca rubra*
Dwarf Tall Fescues	*Festuca* spp. (e.g., Many Mustang, Silverado)
Blue Oatgrass	*Helictotrichon sempervirens*
Low-growing turf mix: 40% dwarf tall fescue 30% dwarf perenial rye "Barclay" 25% red fescue 5% colonial bentgrass	
* *Native species.* *Notes*: • *Many other ornamental grasses which require only annual mowing are suitable.* • *Ivy is not permitted because of its tendency to spread.*	

Recommended Design Features

The following features should be incorporated into bioswale designs where ***site*** conditions allow.

Swale Layout and Grading

1. If the longitudinal slope is less than 1.5 percent, and an underdrain is used per Section 6.3.1.2, "Design Criteria" (p. 6-46), the **subgrade** should contain 10 percent or more of sand to promote infiltration of standing water. If sand is added to promote drainage, the soil or sand substrate must still be amended with compost. Compost must meet Specification 1 described in Reference 11-C.
2. **Underdrains** may be necessary for swales greater than 1.5 percent longitudinal slope on poorly drained till soils, especially if it is likely that the swale will intercept groundwater.
3. Bioswales should be aligned to avoid sharp bends where erosion of the swale side slope can occur. However, gradual meandering bends in the swale are desirable for aesthetic purposes and to promote slower flow.

Location and Landscaping

1. During seeding, slow-release **fertilizers** may be applied to speed the growth of grass. If the swale is located in a sensitive lake watershed, low phosphorus fertilizers (such as formulations in the proportion 3:1:3 N-P-K or less) or slow-release phosphorus formulations such as rock phosphate should be used, and at no more than the minimum necessary agronomic rate. A typical fertilizer application rate should be no more than 2 pounds per 1,000 square feet. Regardless of location, the fertilizer must meet the requirements of Chapter 15.54.500 RCW limiting the use of fertilizer containing phosphorus.
2. Consultation with a **landscape or erosion control specialist** is recommended for project-specific recommendations on grass seed, fertilizer, and mulching applications to ensure healthy grass growth. The **grass mix** should be capable of surviving and remaining healthy under both dry and wet conditions with limited maintenance.
3. A grassy swale should be incorporated into the ***project site*** landscape design. **Shrubs** may be planted along the edges of a swale (above the WQ treatment level) provided that exposure of the swale bottom to sunlight and maintenance accessibility are not compromised. *Note: For swales used to convey high flows, the plant material selected must bind the soil adequately to prevent erosion.*
4. Swales should not be located in areas where **trees** will drop leaves or needles that can smother the grass or clog part of the swale flow path. Likewise, landscaping plans should take into consideration the problems that **falling leaves and needles** can cause for swale performance and maintenance. Landscape **planter beds** should be designed and located so that soil does not erode from the beds and enter a nearby bioswale.

Construction Considerations

1. If a bioswale is put into operation before all construction in the drainage area of the swale is complete, the swale must be cleaned of sediment and reseeded prior to acceptance by the County. The County will not release financial guarantees if swales are not restored and vigorous grass growth established.
2. It is preferable to provide good erosion control before runoff enters a bioswale. Swales are designed to handle only modest sediment loads from stabilized ***sites***.

Maintenance Considerations

The design criteria given previously have incorporated maintenance concerns into swale design. However, the designer should know the type and frequency of maintenance anticipated so that alternative proposals can incorporate maintenance activity.

Typical swale maintenance includes routine mowing, sediment and debris removal, and repair of eroded or scoured channel sections as described below.

1. Grass should be **mowed to maintain an average grass height** between 4 inches and 9 inches, depending on the ***site*** situation. Monthly mowing is needed from May through September to maintain grass vigor. If a swale is not mowed at least annually, trees and brush will invade the swale and inhibit grass growth, compromising the swale's performance for water quality treatment.
2. **Grass clippings** should be removed from the swale and composted onsite (away from the swale), or disposed of properly offsite.
3. **Sediment** deposited at the head of the swale should be removed if grass growth is being inhibited for more than 10 percent of the swale length or if the sediment is blocking the even spreading or entry of water to the rest of the swale. Annual sediment removal and spot reseeding will probably be necessary.
4. If flow **channelization or erosion** has occurred, the swale should be regraded to produce a flat bottom width, and then reseeded as necessary. If the channel results from constant base flow, it may be better to install a low-flow drain rather than to regrade. Regrading should not be required every year.
5. For swales with underdrains, **vehicular access to the swale bottom** (other than grass mowing equipment) should be avoided because the drainpipe cannot support vehicle weight. Consideration should be given to providing wheel strips in the swale bottom if access is needed.

FIGURE 6.3.1.A BIOSWALE SCHEMATIC

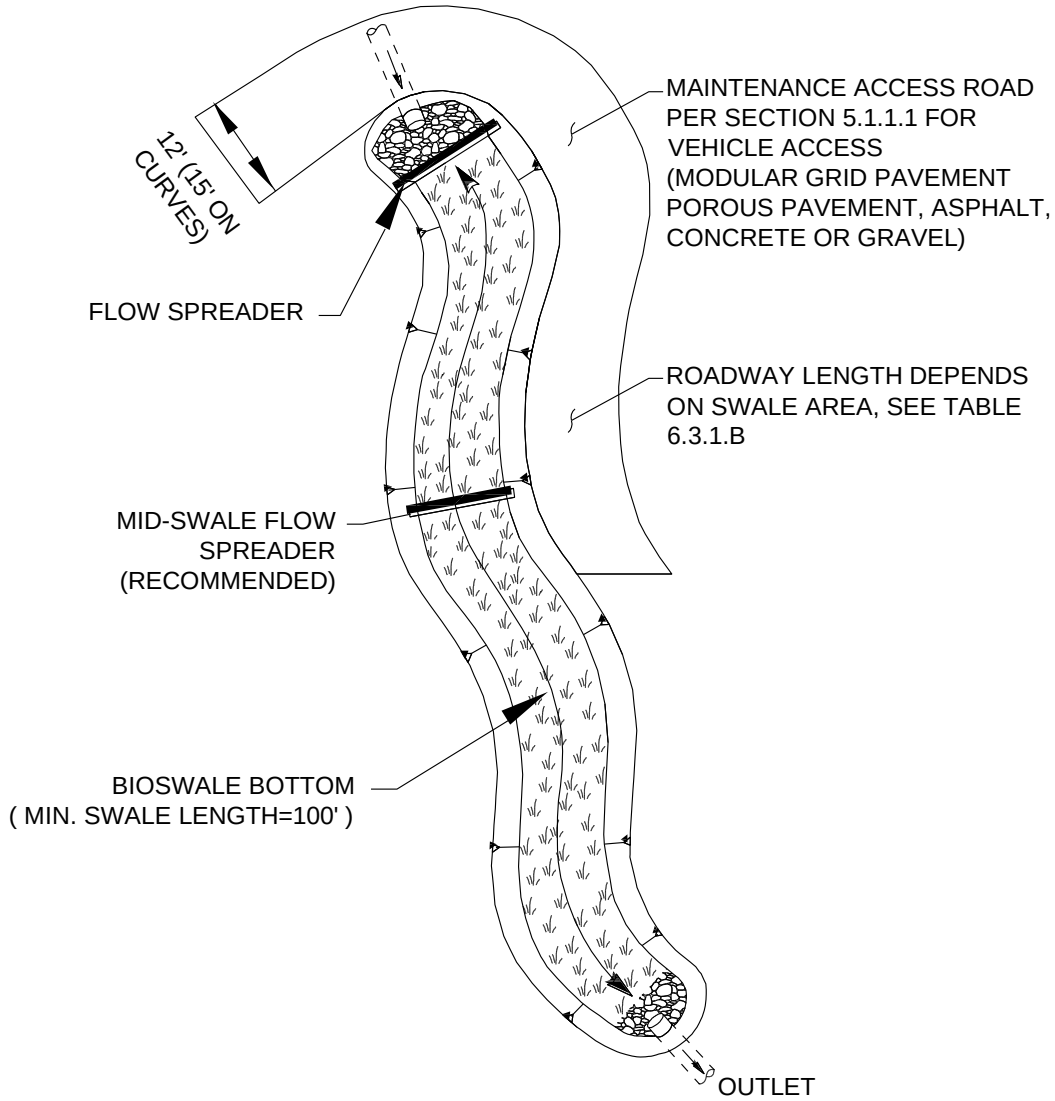

NOTE:
PREFERRED LONGITUDINAL SLOPE 1.5% TO 6%, SEE SECTION 6.3.1.2.
FOR SLOPE < 1.5%, PROVIDE UNDERDRAIN OR WET BIOSWALE.
SLOPE > 6% REQUIRES CHECK DAMS AND VERTICAL DROPS TO REDUCE EFFECTIVE SLOPE.

PLAN VIEW
NTS

FIGURE 6.3.1.B BIOSWALE CROSS-SECTIONS

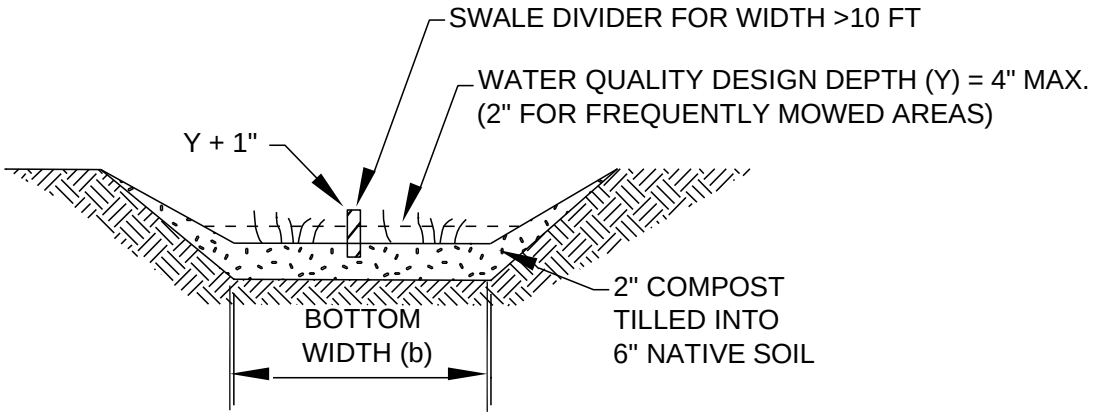

BOTTOM WIDTH (b) MAX. = (16 FT + DIVIDER WIDTH)
BOTTOM WIDTH (b) MIN. = 2 FT

TYPICAL SWALE SECTION
NTS

FIGURE 6.3.1.C BIOSWALE UNDERDRAIN DETAIL

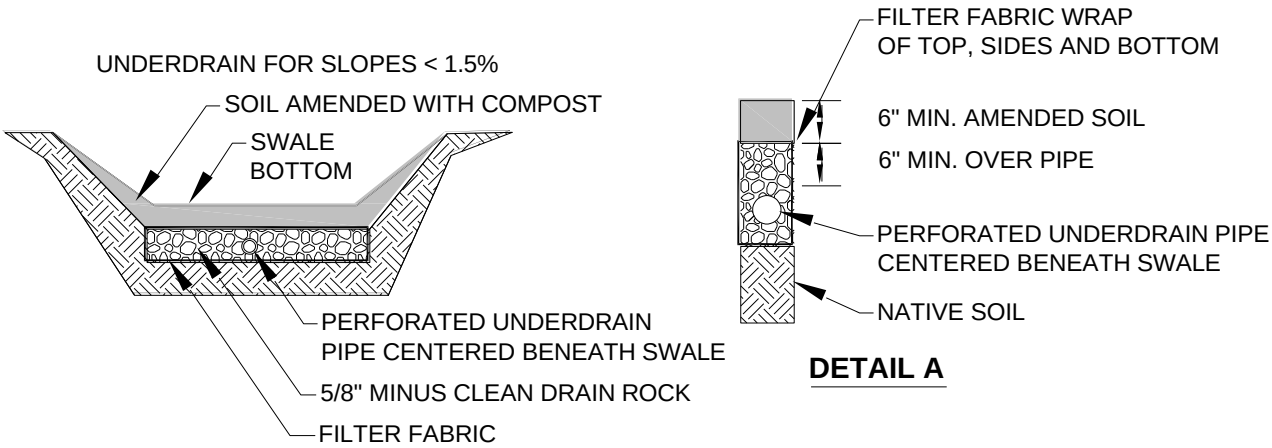

SECTION
NTS

DETAIL A

NOTE:
UNDERDRAIN MUST INFILTRATE OR DRAIN
FREELY TO AN ACCEPTABLE DISCHARGE POINT.

FIGURE 6.3.1.D BIOSWALE LOW-FLOW DRAIN

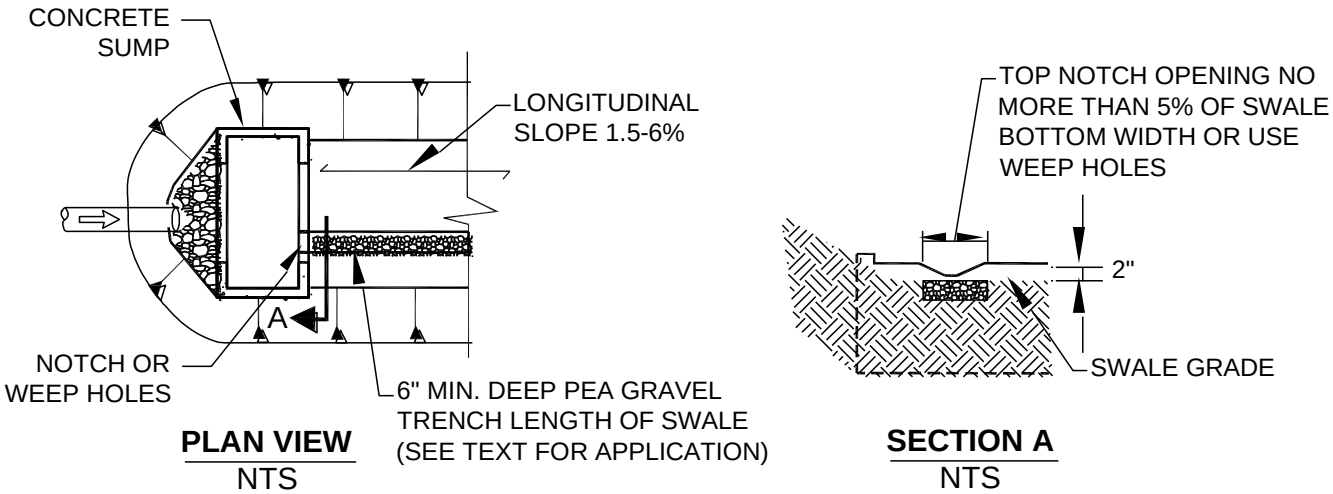

FIGURE 6.3.1.E BIOSWALE WHEEL STRIPS

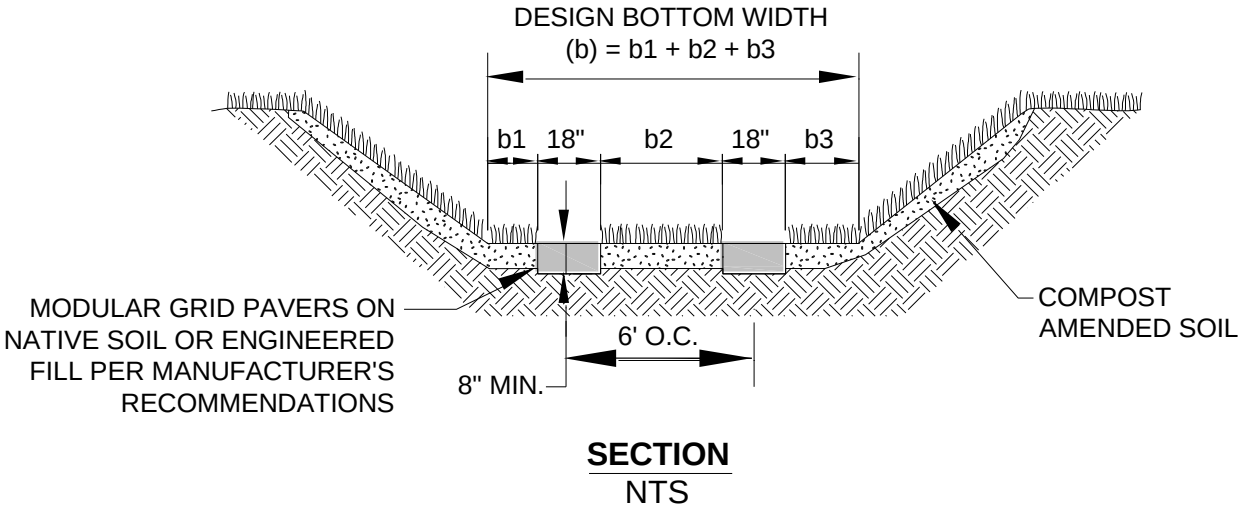

6.3.2 WET BIOSWALES

A *wet bioswale* is a variation of a basic bioswale for use where the longitudinal slope is slight, water tables are high, or continuous low base flow is likely to result in saturated soil conditions. Where saturation exceeds about 2 weeks, typical grasses will die. Thus, vegetation specifically adapted to saturated soil conditions is needed. Different vegetation in turn requires modification of several of the design parameters for the basic bioswale detailed in Section 6.3.1 (p. 6-41).

Applications

Wet bioswales are applied where a basic bioswale is desired but not allowed or advisable because one or more of the following conditions exist:

- The swale is on till soils and is downstream of a detention facility providing Level 2 or 3 flow control.
- Saturated soil conditions are likely because of seeps or base flows on the ***project site***.
- Longitudinal slopes are slight (generally less than 1.5 percent).

Consult the water quality menus in Section 6.1 (p. 6-3) for information on how this facility may be used to meet Core Requirement #8.

6.3.2.1 METHODS OF ANALYSIS

Wet bioswales use the **same methods of analysis as basic bioswales** (see Section 6.3.1.1, p.6-42) except the following **step is added**:

Step 7: Adjust for extended wet season flow. If the swale will be downstream of a detention facility providing Level 2 or 3 flow control, multiply the treatment area (bottom width times length) of the swale by 2, and readjust the swale length, if desired. Maintain a 5:1 length to width ratio (see criteria under "Swale Geometry" below).

Intent: An increase in the treatment area of swales following Level 2 or 3 detention facilities is required because of the differences in vegetation established in a constant flow environment. Although flows following Level 2 or 3 detention facilities are small, and swales are likewise much smaller than those sized for upstream flows, they are much more protracted. These protracted flows result in more stream-like conditions than are typical for other wet bioswale situations. Since vegetation growing in streams is often less dense, this increase in treatment area is needed to ensure that equivalent pollutant removal is achieved in extended flow situations.

6.3.2.2 DESIGN CRITERIA

Swale Geometry

Same as specified for **basic bioswales** (see Section 6.3.1.2, p. 6-46) except for the following **modifications:**

1. **Criterion 1:** The **maximum bottom width** may be increased to 25 feet, but a length-to-width ratio of 5:1 must be provided. No longitudinal dividing berm is needed. *Note: The minimum swale length is still 100 feet.*
2. **Criterion 2:** If **longitudinal slopes** are greater than 2 percent, the wet swale must be stepped so that the slope within the stepped sections averages 2 percent. Steps may be made of retaining walls, log check dams, or short riprap sections. **No underdrain or low-flow drain is required**.
3. **Criterion 3: Curved swales** are allowed and the application of criteria for maintenance access road curves are not required.

High-Flow Bypass

A high-flow bypass is required for flows greater than the water quality design flow to protect wetland vegetation from damage.[27] The bypass may be an open channel parallel to the wet bioswale.

Water Depth and Base Flow

Same as for basic bioswales (see page 6-47), except the **design water depth** shall be 4 inches or less for all wetland vegetation selections, and **no underdrains or low-flow drains are required**.

Flow Velocity, Energy Dissipation, and Flow Spreading

Same as for basic bioswales (see page 6-47), except **no flow spreader is needed**.

Access

Same as for basic bioswales (see page 6-48) except access is only required to the inflow and the outflow of the swale; access along the length of the swale is not required. Also, wheel strips may not be used for access in the swale.

Intent: An access road is not required along the length of a wet swale because of infrequent access needs. Frequent mowing or harvesting is not desirable. In addition, wetland plants are fairly resilient to sediment-induced changes in water depth, so the need for access should be infrequent.

Soil Amendment

Same as for basic bioswales (see page 6-49).

Planting Requirements

Same as for **basic bioswales** (see page 6-49) except for the following **modifications:**

1. A list of acceptable plants with recommended spacing is given in Table 6.3.2.A (p. 6-59). In general, it is best to plant several species to increase the likelihood that at least some of the selected species will find growing conditions favorable.
2. A wetland seed mix may be applied by hydroseeding, but if coverage is poor, planting of rootstock or nursery stock is required. Poor coverage is considered to be more than 30 percent bare area through the upper $^{2}/_{3}$ of the swale after four weeks.

Recommended Design Features

Same as for basic bioswales (see page 6-52).

Construction Considerations

Same as for basic bioswales (see page 6-52).

Maintenance Considerations

Same as for basic bioswales (see page 6-52), except mowing of wetland vegetation is not required. However, harvesting of very dense vegetation may be desirable in the fall after plant die-back to prevent the sloughing of excess organic material into receiving waters. Many native *Juncus* species remain green throughout the winter; therefore, fall harvesting of *Juncus* species is not recommended.

[27] Unlike grass, wetland vegetation will not quickly regain an upright attitude after being laid down by high flows. New growth, usually from the base of the plant, often taking several weeks, is required to regain its upright form.

TABLE 6.3.2.A RECOMMENDED PLANTS FOR WET BIOSWALE		
Common Name	**Scientific Name**	**Spacing (on center)**
Shortawn foxtail	*Alopecurus aequalis*	seed
Water foxtail	*Alopecurus geniculatus*	seed
Spike rush	*Eleocharis spp.*	4 inches
Slough sedge*	*Carex obnupta*	6 inches or seed
Sawbeak sedge	*Carex stipata*	6 inches
Sedge	*Carex* spp.	6 inches
Western mannagrass	*Glyceria occidentalis*	seed
Velvetgrass	*Holcus mollis*	seed
Slender rush	*Juncus tenuis*	6 inches
Watercress*	*Rorippa nasturtium-aquaticum*	12 inches
Water parsley*	*Oenanthe sarmentosa*	6 inches
Hardstem bulrush	*Scirpus acutus*	6 inches
Small-fruited bulrush	*Scirpus microcarpus*	12 inches

** Good choices for swales with significant periods of flow, such as those downstream of a Level 2 or 3 detention facility.*

Note: Cattail (Typha latifolia) is not appropriate for most wet swales because of its very dense and clumping growth habit which prevents water from filtering through the clump.

6.3.3 LATERAL INFLOW BIOSWALES

In situations where water enters a bioswale along the side rather than discretely at the head, a different design approach – the lateral inflow bioswale – is needed. The basic swale design (see Section 6.3.1, p. 6-41) is modified by increasing swale length to achieve an equivalent average residence time.

Applications

A lateral inflow bioswale is to be **used when inflows are not concentrated**, such as locations along the shoulder of a road without curbs. This design may also be **used where frequent, small point flows enter a swale**, such as through curb inlet ports spaced at intervals along a road, or from a parking lot with frequent curb cuts. In general, no inlet port should carry more than about 10 percent of the flow.

A lateral inflow swale is not appropriate for a situation in which significant lateral flows enter a swale at some point downstream from the head of the swale. In this situation, the swale width and length must be recalculated from the point of confluence to the discharge point in order to provide adequate treatment for the increased flows.

Consult the water quality menus in Section 6.1 (p. 6-3) for information on how this facility may be used to meet Core Requirement #8.

6.3.3.1 METHODS OF ANALYSIS

The design flow for lateral inflow swales must include runoff from the pervious side slopes draining to the swale along the entire swale length.

The method of analysis for lateral inflow swales is the same as for basic bioswales (see Section 6.3.1.1, p. 6-42) except for the following **clarification of Step 1** and **modification to Step 4**:

- **Step 1:** The WQ design flow may be variable to reflect the increase in flows along the swale length. If only a single design flow is used, the flow at the outlet shall be used.
- **Step 4:** Double the hydraulic residence time so that it is a minimum of 18 minutes (1,080 seconds). Equation (6-7) becomes:

$$L = 1080 V_{wq} \qquad (6\text{-}10)$$

where L = minimum allowable swale length (ft)
V_{wq} = design flow velocity calculated in Step 3 (fps).

Note: Although bottom widths may be increased to reduce length, bottom width cannot be reduced because Manning's depth-velocity-flow rate relationships would not be preserved.

6.3.3.2 DESIGN CRITERIA

Same as specified for **basic bioswales** (in Section 6.3.1.2, p. 6-46) except for the following **modification:**

Planting Requirements, Criterion 4: For lateral inflow bioswales, interior side slopes above the WQ design treatment elevation shall be planted in grass. A typical lawn seed mix or the bioswale seed mixes are acceptable. Landscape plants or groundcovers other than grass shall not be used anywhere between the runoff inflow elevation and the bottom of the swale.

Intent: The use of grass on interior side slopes reduces the chance of soil erosion and transfer of pollutants from landscape areas to the bioswale treatment area.

6.3.4 STANDARD FILTER STRIPS

A *filter strip* is a grassy slope located adjacent and parallel to an impervious area such as a parking lot, driveway, or roadway (see the detail in Figure 6.3.4.A on page 6-67). A filter strip is graded to maintain sheet flow of stormwater runoff over the entire width of the strip. Pollutants are removed primarily by means of sedimentation, which is enhanced as a consequence of the resistance that the grass blades present to flowing water. To a much lesser degree, pollutants may adhere or sorb to grass and thatch. Some dissolved pollutants may also be sorbed by the underlying soil when infiltration occurs, but the extent of infiltration depends on the type of soil, the density of the grass, and the slope of the strip. The primary pollutant removal mechanism is particle settling.

In this manual, design procedures are provided for two types of filter strip applications: (1) the standard filter strip that should typically apply to parking lots, driveways, and roads where sufficient space is available, and (2) a modified, narrow area filter strip for roadside applications with limited right-of-way space that constricts the filter strip sizing. The standard filter strip is covered in this section, and the narrow area filter strip is covered in Section 6.3.5.

Applications and Limitations

Filter strip design is based on the expectation that water will flow fairly evenly across the entire width and length of the strip area. Thus, paved areas without underground stormwater collection systems, gutters, or other runoff control features are good candidates for filter strips.

Filter strips are suitable for areas that meet the following conditions:

- Stormwater runoff from the area requiring treatment shall be uniformly distributed along the top of the entire filter strip. If stormwater runoff from the entire area cannot be spread evenly along the top of the filter strip, the filter strip shall be applied only to flows that can be uniformly distributed. A different stormwater treatment facility, such as a swale, should be used for areas of the ***project site*** with concentrated flow (for instance, at road intersections).
- The flowpath draining to the filter strip shall not exceed 150 feet. Runoff flows traveling greater distances tend to concentrate before entering the filter strip.
- The lateral slope of the drainage area contributing flows to the filter strip (parallel to the edge of pavement) shall be less than 2 percent. A stepped series of flow spreaders installed at the head of the strip could compensate for slightly steeper slopes (see "Flow Spreading and Energy Dissipation," p. 6-64).
- The longitudinal slope of the contributing drainage area (parallel to the direction of flow entering the filter strip) should be less than 5 percent. Contributing drainage areas with slopes steeper than 5 percent shall either use a different WQ facility or must provide energy dissipation and flow spreading mechanisms upslope of the upper edge of the filter strip.

A filter strip generally requires more land area than a bioswale because the flow depth through the filter is shallower than through a swale. Although the space requirements may be greater, the filter strip is a viable water quality treatment option in locations where grassy slopes already exist, or where a slope can be incorporated easily into the landscape design for the ***project site***. Other limitations that shall be considered are listed below:

1. Filter strips are susceptible to short-circuiting via flow channelization because they rely on a large smoothly graded area. If rills, gullies, or channels occur in the filter strip area, inflows will travel too quickly through the filter strip, reducing contact time and pollutant removal performance. A filter strip slope with uneven grading perpendicular to the sheet flow path will develop flow channels over time. These problems can be overcome with careful ***site*** planning, good soil compaction, skillful grading, and periodic maintenance.

2. Filter strip areas shall not be used for material storage or any activities that could cause disturbance of the ground surface in a manner that could create or promote preferential flowpaths (rills or channels) in the filter strip.
3. Filter strips shall not be located in shaded areas, for filter strips require exposure to sunlight to ensure healthy grass growth.

Consult the water quality menus in Section 6.1 (p. 6-3) for information on how this facility may be used to meet Core Requirement # 8.

6.3.4.1 METHODS OF ANALYSIS

In this manual, *filter strip length* is defined as the length of the flowpath through the strip. Strip width is typically the same as the extent of pavement along the upstream edge of the strip. Thus, in sizing filter strips, the length is normally the dimension to be sized (see Figure 6.3.4.A below for definitions of terms).

FIGURE 6.3.4.A FILTER STRIP TERMINOLOGY

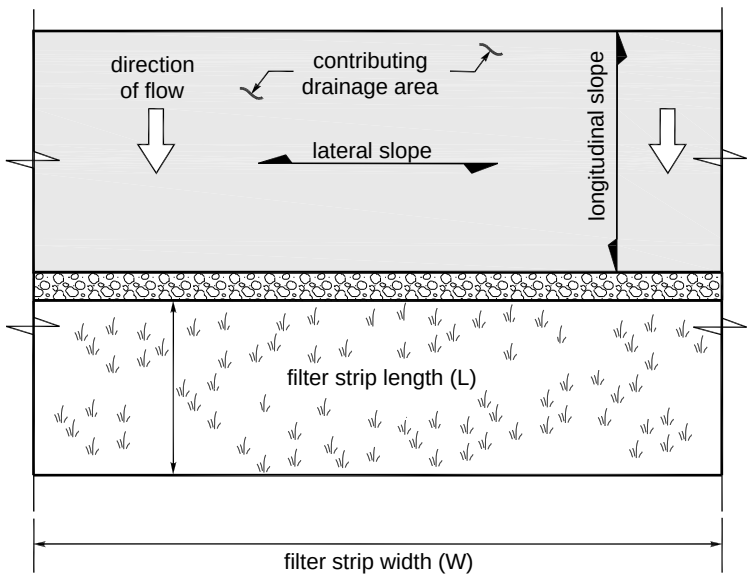

The procedure for filter strip design (described below) relies on Manning's equation to calculate some design variables. It is recognized that there are problems in this application.[28] The filter strip sizing method will be modified as new research results become available.

Filter strips sized and built using the method of analysis outlined below and the required design criteria presented in Section 6.3.4.2 are expected to meet the Basic Water Quality menu goal of 80% TSS removal.

Step 1: Calculate design flow. Determine the **on-line** water quality design flow Q_{wq} (see Section 6.2.1, p. 6-17) using the hydrologic analysis procedures described in Chapter 3 and applying the modification described in Table 6.2.1.A.

[28] Ree, W.O., F.L. Wimberley, and F.R. Crow. 1977. Manning *n* and the overland flow equation. Transactions of the American Society of Agricultural Engineers 20 (89).

Step 2: Calculate design flow depth. The design flow depth is calculated based on the width of the filter strip (typically equivalent to the length of the edge of impervious surface contributing flow to the filter strip) and the longitudinal slope of the filter strip (parallel to the direction of flow) using a form of Manning's equation as follows:

$$Q_{wq} = \frac{1.49}{n_{wq}} W d_f^{1.67} s^{0.5} \tag{6-11}$$

where Q_{wq} = water quality design flow , k(Q, modeled on-line rate), (cfs)
where k = correlation ratio determined from Table 6.2.1.A
n_{wq} = Manning's roughness coefficient (either 0.35 or 0.45; see the criteria under "Filter Strip Geometry and Flow Resistance," p. 6-64)
W = width of filter strip perpendicular to the direction of flow (ft) (≅ length of impervious surface contributing flow)
d_f = design depth of flow (ft), which is also assumed to be the hydraulic radius (maximum 1 inch, or 0.083 feet; see the criteria under "Water Depth and Velocity," p. 6-64)
s = longitudinal slope of filter strip parallel to the direction of flow (ft/ft) (averaged over the width of the filter strip; all portions averaged must also meet the slope design criteria).

Rearranging the above equation, the design depth of flow can be calculated using the following equation:

$$d_f = \left(\frac{Q_{wq} n_{wq}}{1.49 W s^{0.5}} \right)^{0.6} \tag{6-12}$$

If the calculated flow depth exceeds 1 inch (0.083 feet), the design flow rate routed through the strip must be reduced. If this is not feasible, it is not possible to use a filter strip.

Step 3: Calculate design flow velocity through filter strip. The design flow velocity V_{wq} is based on the water quality design flow rate, the width of the filter strip, and the calculated design flow depth from Step 2 using the following equation:

$$V_{wq} = \frac{Q_{wq}}{W d_f} \tag{6-13}$$

where V_{wq}= design flow velocity (fps)
W = strip width (ft) (parallel to the edge of pavement)
d_f = water depth (ft).

If V_{wq} exceeds 0.5 feet per second, a filter strip shall not be used. Either redesign the area to provide a gentler longitudinal slope for the strip, or select a different WQ facility.

Step 4: Calculate required length of filter strip. Determine the required length L of the filter strip to achieve a desired hydraulic residence time of at least 9 minutes (540 seconds) using the following equation:

$$L = 540 V_{wq} \tag{6-14}$$

where L = filter strip length (ft)
V_{wq} = design flow velocity from Step 3 (fps)

6.3.4.2 DESIGN CRITERIA

Figure 6.3.4.B (p. 6-67) shows typical filter strip details. The most effective filter strips achieve uniform sheet flow under all runoff flow conditions. To achieve proper flow conditions, the following basic design requirements apply.

Drainage Area Restrictions

1. The **longest flowpath** from the area contributing sheet flow to the filter strip shall not exceed 150 feet.
2. The **lateral slope of the contributing drainage** (parallel to the edge of pavement) shall be 2 percent or less.
3. A stepped series of **flow spreaders** installed at the head of the strip may be used to compensate for drainage areas having lateral slopes of up to 4 percent (see Section 6.2.6, p. 6-36, for information on flow spreader designs).
4. The **longitudinal slope of the contributing drainage area** (parallel to the direction of flow entering the filter strip) should be 5 percent or less.
5. Contributing drainage areas with longitudinal slopes steeper than 5 percent shall either use a different WQ facility or provide energy dissipation and flow spreading options upslope of the upper edge of the filter strip to achieve flow characteristics equivalent to those meeting the Criteria in items 2 and 4 above.

Filter Strip Geometry and Flow Resistance

1. The **longitudinal slope** of a filter strip (along the direction of flow) shall be between 1 percent minimum and 15 percent maximum.
2. The **lateral slope** of a strip (parallel to the edge of pavement, perpendicular to the direction of flow) shall be less than 2 percent.
3. The **ground surface** at the upper edge of a filter strip (adjacent to the contributing drainage area) shall be at least 1 inch lower than the edge of the impervious area contributing flows.
4. Manning's **roughness coefficient (n_{wq})** for flow depth calculations shall be 0.35. An exception to this requirement may be made for situations where the filter strip will be mowed weekly in the growing season to consistently provide a grass height of less than 4 inches; in this case, the value of n_{wq} in Equation (6-12) may be set to 0.45. *Note: In filter strip design, a larger* n *value results in a smaller strip size.*

Water Depth and Velocity

1. The **maximum depth** of flow through a filter strip for the WQ design flow shall be 1.0 inch.
2. The **maximum allowable flow velocity** for the water quality design flow V_{wq} shall be 0.5 feet per second.

Flow Spreading and Energy Dissipation

1. Runoff entering a filter strip must not be concentrated. A **flow spreader** shall be installed at the edge of the pavement to uniformly distribute the flow along the entire width of the filter strip.
2. At a minimum, a **gravel flow spreader** (gravel-filled trench) shall be placed between the impervious area contributing flows and the filter strip, and meet the following requirements:
   a) The gravel flow spreader shall be a minimum of 6 inches deep and shall be 18 inches wide for every 50 feet of contributing flowpath.
   b) The gravel shall be a minimum of 1 inch below the pavement surface.

Intent: This allows sediment from the paved surface to be accommodated without blocking drainage onto the strip.

c) For contributing flowpaths less than 50 feet, the spreader width may be reduced to a minimum of 12 inches.

d) Where the ground surface is not level, the gravel spreader must be installed so that the bottom of the gravel trench and the outlet lip are level.

e) Along **roadways**, gravel flow spreaders must meet the specification for shoulder ballast given in Section 9-03.9(2) of the current WSDOT/APWA *Standard Specifications for Road, Bridge and Municipal Construction*. The ballast shall be compacted to 90 percent standard proctor.

Intent: This specification was chosen to meet traffic safety concerns as well as to limit fines to less than 2 percent passing the No.100 sieve.

3. Other flow spreaders (see Section 6.2.6, p. 6-36) may also be used. For filter strip applications, the notched curb spreader and through-curb port spreaders shall not be used without also adding a gravel spreader to better ensure that water sheet-flows onto the strip.

4. **Energy dissipaters** are needed in a filter strip if sudden slope drops occur, such as locations where flows in a filter strip pass over a rockery or retaining wall aligned perpendicular to the direction of flow. Adequate energy dissipation at the base of a drop section can be provided by a riprap pad (see Chapter 4, Table 4.2.2.A, for guidance).

Access

Access shall be provided at the **upper edge of a filter strip** to enable maintenance of the inflow spreader throughout the strip width and allow access for mowing equipment.

Soil Quality

1. Native topsoil six inches deep with no less than 1% organic matter (OM) does not require soil amendment, except where grading has occurred and topsoil meeting that OM standard has not been replaced.

2. Where topsoil has been removed or if native soil OM is less than 1%, Two inches (minimum) of **well-rotted compost** shall be provided for the entire filter strip treatment area to amend the topsoil. The compost must be tilled into the underlying native soil to a depth of 6 inches to prevent washing out the compost and avoid creating a defined layer of different soil types that can prevent downward percolation of water. Compost shall meet Specification 1 described in Reference 11-C.

3. **Soil or sod** with a **clay content** of greater than 10 percent should be avoided. If there is potential for contamination of the underlying groundwater, the filter strip shall be lined with a treatment liner to prevent groundwater contamination. See Section 6.2.4 (p. 6-27), for details on soil liner options.

Planting Requirements

1. **Grass** shall be established throughout the entire treatment area of the filter strip.

2. **Sod** may be used instead of grass seed as long as the entire filter strip area is completely covered with no gaps between sod pieces.

3. **Filter strips** are subject to drier conditions than bioswales and also may be more vulnerable to erosion than swales. For these reasons, the following permanent **erosion-control grass seed mix** shall be applied at a rate of 80 pounds per acre in filter strips (percentages are by weight):

    1. 40 percent turf-type rye
    2. 40 percent fescue
    3. 10 percent white dutch clover

4. 10 percent colonial bentgrass

4. **Alternate seed mixes** may be used if a horticultural or erosion-control specialist recommends a different mix and if erosion prevention is adequately addressed by other erosion-control measures.
5. Seed may be applied by **hydroseeding or broadcast application**.
6. **Seeding** is best performed in spring (mid-March to June) or fall (late September to October). If seed is applied in the spring or summer, irrigation must be provided to ensure grass survival.
7. Runoff shall be diverted around a filter strip until the grass is established, or an **erosion control blanket** shall be placed over the freshly applied seed mix. See *ESC Standards* (detached Appendix D) for information on erosion control blankets.

Recommended Design Features

Where conditions allow, the following features should be incorporated into a filter strip's design and its corresponding site configuration.

Site Layout and Landscaping

1. Filter strips should be incorporated into the **landscape design** of the ***site***; however, the treatment areas (i.e., grassy areas) should not be fertilized unless needed for healthy grass growth.
2. **Curbs** should be avoided, if possible, at the downslope edge of the contributing area. If curbing is needed, through-curb ports shall be provided (see Section 6.2.6, p. 6-36).
3. If **parking lot wheel stops** are necessary, individual wheel stops should have gaps for water to pass through. The shorter the wheel stops, the better for sheet flow purposes. See Section 6.2.6 (p. 6-36) for requirements.
4. During seeding, slow-release **fertilizers** may be applied to speed the growth of grass. If the filter strip is located in a sensitive lake watershed, low phosphorus fertilizers (such as formulations in the proportion 3:1:3 N-P-K or less) or slow-release phosphorus formulations should be used, and at no more than the minimum necessary agronomic rate. Regardless of location, the fertilizer must meet the requirements of Chapter 15.54 RCW limiting the use of fertilizer containing phosphorus.
5. Filter strips should be well defined on a ***site*** and **marked with signs** to prevent future destruction or alteration of the treatment areas. Small at-grade signage is preferred.

Maintenance Features

1. **Irrigation** may be required in the summer months following initial filter strip construction to prevent the filter strip grass from wilting or dying. ***Site*** planning should address the need for sprinklers or other means of irrigation.
2. **Flatter slopes** are preferred for filter strips to make grass mowing easier.

Use with Oil Control Facilities

A project providing **oil control** (see the high-use definition in Chapter 1) may employ a filter strip for runoff treatment if a **linear sand filter** (see Section 6.5.4, p. 6-128) is used for oil control preceding the filter strip. In this situation, the sand filter should be designed so that flows exit the underdrain gravel along the whole length of the trench directly to the filter strip.

Construction Considerations

1. If a filter strip is put into operation before all construction in the contributing drainage catchment has been completed, the strip must be cleaned of sediment and reseeded prior to acceptance by the County. The County will not release financial guarantees if the filter strip is not restored and vigorous grass growth re-established.

2. It is preferable to provide erosion control before construction-phase sediment enters the filter strip. Filter strips are designed to handle only modest sediment loads without frequent maintenance.

Maintenance Considerations

Maintenance considerations, including mowing frequency and sediment removal, are similar to those for bioswales (see page 6-52).

FIGURE 6.3.4.B TYPICAL FILTER STRIP DETAILS

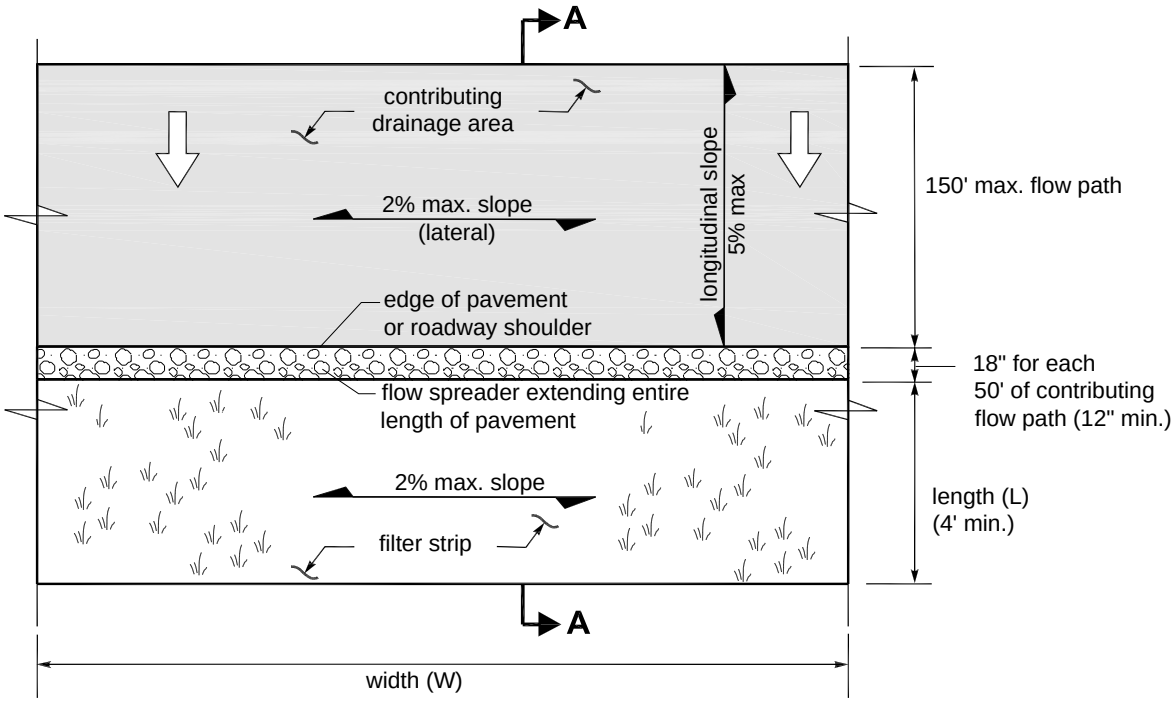

PLAN VIEW
NTS

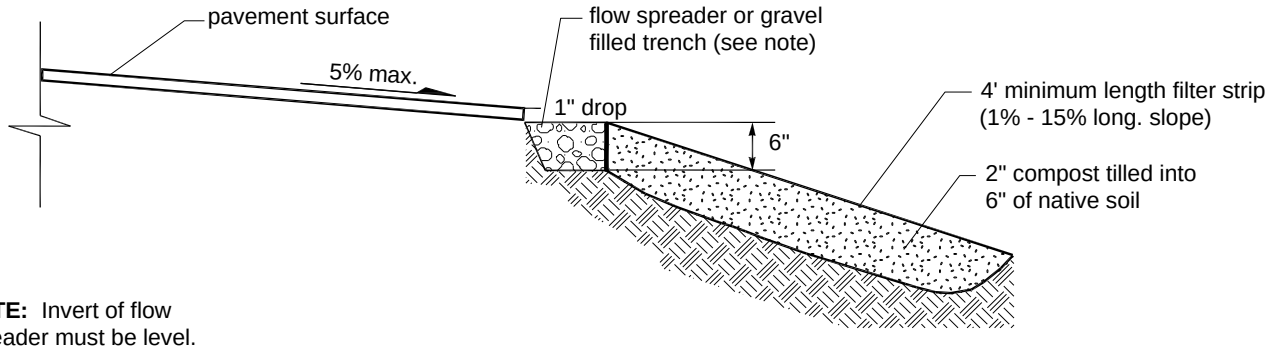

NOTE: Invert of flow spreader must be level. Roadway shoulders must use shoulder ballast.

SECTION A-A
NTS

6.3.5 NARROW AREA FILTER STRIPS

This section describes a filter strip design[29] for impervious areas with flowpaths of 30 feet or less that can drain along their widest dimension to grassy areas (see Figure 6.3.4.A, p. 6-62, for definitions of filter strip geometry terms).

The treatment objectives, applications and limitations, design criteria, materials specifications, and construction and maintenance requirements set forth in the basic filter strip design apply to narrow filter strip applications.

If space is available to use the basic filter strip design, that design shall be used in preference to the narrow filter strip. However, along roadways with limited right-of-way, or for narrow parking strips, the narrow strip may be used.

Consult the water quality menus in Section 6.1 (p. 6-3) for information on how this facility may be used to meet Core Requirement #8.

6.3.5.1 METHODS OF ANALYSIS

The sizing of a narrow area filter strip is based on the length of flowpath draining to the filter strip and the longitudinal slope of the filter strip itself (parallel to the flowpath).

Step 1: Determine length of flowpath draining to filter strip. Determine the length of the flowpath from the upstream to the downstream edge of the impervious area draining sheet flow to the strip. Normally this is the same as the width of the paved area, but if the area is sloped, the flow path may be longer than the width of the impervious area.

Step 2: Determine average longitudinal slope of filter strip. Calculate the longitudinal slope of the filter strip (along the direction of sheet flow), averaged over the total width of the filter strip. The minimum sizing slope is 2 percent. If the slope is less than 2 percent, use 2 percent for sizing purposes. The maximum allowable filter strip slope is 20 percent. If the slope exceeds 20 percent, the filter strip must be stepped down the slope so that the treatment areas between drop sections do not have a longitudinal slope greater than 20 percent. Drop sections must be provided with erosion protection at the base and flow spreaders to re-spread flows. Vertical drops along the slope must not exceed 12 inches in height. If this is not possible, a different treatment facility must be selected.

Step 3: Determine required length of filter strip. Select the appropriate filter strip length for the flowpath length and filter strip longitudinal slope (Steps 1 and 2 above) **from the graph in Figure 6.3.5.A (p. 6-69)**.[30] The filter strip must be designed to provide this minimum length *L* along the entire stretch of pavement draining into it.

To use the graph: Find the **length of the flowpath** on one of the curves (interpolate between curves as necessary). Move along the curve to the point where the **design longitudinal slope** of the filter strip (x-axis) is directly below. Read the filter **strip length** on the y-axis that corresponds to the intersection point.

[29] This narrow area filter strip design method is included here because technical limitations exist in the basic design method that result in filter strips which are proportionately longer as the contributing drainage becomes narrower (a result that is counter-intuitive). Research by several parties is underway to evaluate filter strip design parameters. This research may lead to more stringent design requirements that would supersede the design criteria presented here.

[30] The filter strip length requirements reflected in Figure 6.3.5.A are scaled from dimensions of biofiltration swale treatment areas for the same slope and flow rate conditions.

Example

If the length of flowpath through a parking strip is 20 feet and the filter strip will be at 5 percent longitudinal slope, move along the middle curve until it intercepts the 5 percent grid from the x-axis. The required filter strip length is 7 feet (read from the y-axis).

FIGURE 6.3.5.A FILTER STRIP LENGTHS FOR NARROW RIGHT-OF-WAY

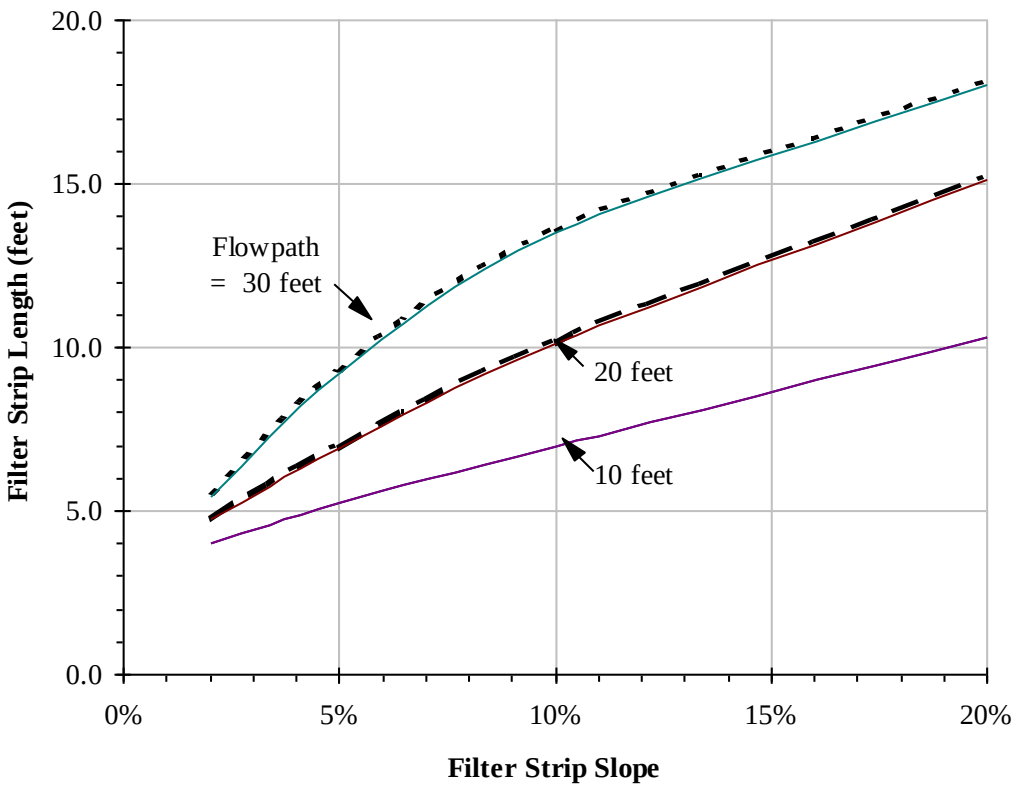

Note: minimum allowable filter strip length is 4 feet

6.3.5.2 DESIGN CRITERIA

Required and recommended design criteria for narrow area filter strips are the **same as specified for basic filter strips**. Note that for roadway applications, gravel spreaders must meet the specification for permeable shoulder ballast given in Section 9-03.9(2) of the current *WSDOT Standard Specifications for Road, Bridge and Municipal Construction*, compacted to 90 percent standard proctor.

6.4 WETPOOL FACILITY DESIGNS

This section presents the methods, criteria, and details for analysis and design of wetponds, wetvaults, and stormwater wetlands. These facilities have as a common element a permanent pool of water, the *wetpool*. Each of the wetpool facilities may be combined with a detention or flow control pond in a combined facility. Included are the following specific facility designs:

- "Wetponds — Basic and Large," Section 6.4.1
- "Wetvaults," Section 6.4.2 (p. 6-86)
- "Stormwater Wetlands," Section 6.4.3 (p. 6-92)
- "Combined Detention and Wetpool Facilities," Section 6.4.4 (p. 6-98).

The information presented for each facility is organized into the following two categories:

1. **Methods of Analysis:** Contains a step-by-step procedure for designing and sizing each facility.
2. **Design Criteria:** Contains the details, specifications, and material requirements for each facility.

6.4.1 WETPONDS — BASIC AND LARGE

A *wetpond* is a constructed stormwater pond that retains a permanent pool of water (a "wetpool") at least during the wet season (see the wetpond detail in Figure 6.4.1.A on page 6-83). The volume of the wetpool is related to the effectiveness of the pond in settling particulate pollutants. The following design procedures, requirements, and recommendations cover two wetpond applications, the basic wetpond and the large wetpond. The two sizes are designed for two different levels of pollutant removal.

Applications and Limitations

A wetpond requires a larger area than a bioswale or a sand filter, but it can be integrated to the contours of a ***site*** fairly easily. In till soils, the wetpond holds a permanent pool of water that provides an attractive aesthetic feature. In more porous soils, wetponds may still be used, but water seepage from unlined cells could result in a dry pond, particularly in the summer months. Lining with impervious material is one way to deal with this situation.

Wetponds may be single-purpose facilities, providing only water quality treatment, or they may be combined with a detention pond to also provide flow control. If combined, the wetpond can often be stacked under the detention pond with little further loss of development area. See Section 6.4.4 (p. 6-98) for a description of combined WQ and detention facilities.

Wetponds treat water primarily by gravity settling and to some degree by biological uptake by algae and transformation and degradation by microorganisms. Wetponds can remove some dissolved pollutants such as soluble phosphorus (phosphate) by uptake, and phosphate may react and combine with cations in solution, forming solid particulates. Wetponds are therefore used in the Sensitive Lake Protection menu for phosphorus control in addition to the Basic WQ menu for solids removal. Wetponds work best when the water already in the pond is moved out *en masse* by incoming flows, a phenomena called *plug flow*. Because treatment works on this displacement principle, the dead storage pool of wetponds may be provided below the groundwater level without interfering unduly with treatment effectiveness. However, if combined with a detention function, the live storage must be above the seasonal high groundwater level.

Consult the water quality menus in Section 6.1 (p. 6-3) for information on how basic and large wetponds may be used to meet Core Requirement #8.

6.4.1.1 METHODS OF ANALYSIS

This section describes methods of analysis for the following two wetpond sizes:

- **Basic wetpond** (see below)
- **Large wetpond** (see page 6-76).

❑ BASIC WETPOND

The primary design factor that determines a wetpond's **particulate removal efficiency** is the volume of the wetpool in relation to the volume of stormwater runoff. The larger the wetpond volume in relation to the volume of runoff, the greater the potential for pollutant removal. Also important are the avoidance of short-circuiting and the promotion of plug flow. *Plug flow* describes the hypothetical condition of stormwater moving through the pond as a unit, displacing the "old" water in the pond with incoming flows. To prevent short-circuiting, water is forced to flow, to the extent practical, to all potentially available flow routes, avoiding "dead zones" and maximizing the time water stays in the pond during the active part of a storm.

Design features that encourage plug flow and avoid dead zones are as follows:

- Dissipating energy at the inlet
- Providing a large length-to-width ratio
- Providing a broad surface for water exchange across cells rather than a constricted area.

Maximizing the flowpath between inlet and outlet, including the vertical path, also enhances treatment by increasing residence time.

The basic wetpond volume is equal to the 91% water quality treatment volume (see Section 6.2.1), calculated with the approved model or by using the Natural Resources Conservation Service (NRCS, formerly Soil Conservation Service (SCS)) curve number method described in *Urban Hydrology for Small Watersheds*, Technical Release 55 (TR-55), June 1986, published by the NRCS. Wetponds designed with the basic wetpond volume using the method below, and the required design criteria in Section 6.4.1.2 are expected to meet the Basic WQ menu goal of 80% TSS removal. The actual performance of a wetpond may vary, however, due to a number of factors, including but not limited to design features, maintenance frequency, storm characteristics, pond algae dynamics, and waterfowl use.

Procedures for determining a wetpond's dimensions and volume are outlined below.

Step 1: Identify the required wetpool volume. A basic wetpond requires a volume equal to the 91% treatment volume, calculated with the approved model or by using the NRCS curve number method. When using the water quality treatment volume reported by the approved model, skip Steps 2 through 4.

Step 2: Determine the weighted NRCS curve number for the developed tributary area.

Table 6.4.1.1.A shows the CNs, by land use description, for the four hydrologic soil groups. These numbers are for a 24-hour duration storm and typical antecedent soil moisture condition preceding 24-hour storms.

TABLE 6.4.1.1.A RUNOFF CURVE NUMBERS FOR SELECTED AGRICULTURAL, SUBURBAN, AND URBAN AREAS

(Sources: TR 55, 1986, and Stormwater Management Manual (SWMMWW), 1992. See SWMMWW Section 2.1.1 for explanation)

	CNs for hydrologic soil group			
Cover type and hydrologic condition.	A	B	C	D
Curve Numbers for Pre-Development Conditions				
Pasture, grassland, or range-continuous forage for grazing:				
Fair condition (ground cover 50% to 75% and not heavily grazed)	49	69	79	84
Good condition (ground cover >75% and lightly or only occasionally grazed)	39	61	74	80
Woods:				
Fair (Woods are grazed but not burned, and some forest litter covers the soil)	36	60	73	79
Good (Woods are protected from grazing, and litter and brush adequately cover the soil)	30	55	70	77
Curve Numbers for Post-Development Conditions				
Open space (lawns, parks, golf courses, cemeteries, landscaping, etc.):[1]				
Fair condition (grass cover on 50% - 75% of the area)	77	85	90	92
Good condition (grass cover on >75% of the area)	68	80	86	90
Impervious areas:				
Open water bodies: lakes, wetlands, ponds etc.	100	100	100	100
Paved parking lots, roofs[2], driveways, etc. (excluding right-of-way)	98	98	98	98
Permeable Pavement (See SWDM 5.2.2 and Appendix C to decide which condition to use):				
Landscaped area	77	85	90	92
50% landscaped area/50% impervious	87	91	94	96
100% impervious area	98	98	98	98
Paved	98	98	98	98
Gravel (including right-of-way)	76	85	89	91
Dirt (including right-of-way)	72	82	87	89
Pasture, grassland, or range-continuous forage for grazing:				
Poor condition (ground cover <50% or heavily grazed with no mulch)	68	79	86	89
Fair condition (ground cover 50% to 75% and not heavily grazed)	49	69	79	84
Good condition (ground cover >75% and lightly or only occasionally grazed)	39	61	74	80
Woods:				
Poor (Forest litter, small trees, and brush are destroyed by heavy grazing or regular burning)	45	66	77	83
Fair (Woods are grazed but not burned, and some forest litter covers the soil)	36	60	73	79
Good (Woods are protected from grazing, and litter and brush adequately cover the soil)	30	55	70	77

Single family residential[3]: Dwelling Unit/Gross Acre	Should only be used for subdivisions > 50 acres	Average Percent impervious area[3,4]	
1.0 DU/GA		15	Separate curve number shall be selected for pervious & impervious portions of the site or basin
1.5 DU/GA		20	
2.0 DU/GA		25	
2.5 DU/GA		30	
3.0 DU/GA		34	
3.5 DU/GA		38	
4.0 DU/GA		42	
4.5 DU/GA		46	
5.0 DU/GA		48	
5.5 DU/GA		50	
6.0 DU/GA		52	
6.5 DU/GA		54	
7.0 DU/GA		56	
7.5 DU/GA		58	
PUD's, condos, apartments, commercial businesses, industrial areas and subdivisions < 50 acres	% impervious must be computed[5]	Separate curve numbers shall be selected for pervious and impervious portions of the site	

For a more detailed and complete description of land use curve numbers refer to Chapter 2, NRCS Technical Release No. 55 (June 1986)

[1] Composite CN's may be computed for other combinations of open space cover type.

[2] Where roof runoff and driveway runoff are infiltrated or dispersed according to the requirements in Chapter 5 and Appendix C, the average percent impervious area may be adjusted in accordance with the procedure described under Section 5.2.2.

[3] Assumes roof and driveway runoff is directed into street/storm system.

[4] All the remaining pervious areas (lawn) are considered to be in good condition for these curve numbers.

[5] See Section 5.2 and Table 3.2.2.E for application of effective impervious area in percentage calculation.

The following are important criteria/considerations for selection of CN values:

Many factors may affect the CN value for a given land use. For example, the movement of heavy equipment over bare ground may compact the soil so that it has a lesser infiltration rate and greater runoff potential than would be indicated by strict application of the CN value to developed site conditions.

CN values can be area weighted when they apply to pervious areas of similar CNs (within 20 CN points). However, high CN areas should not be combined with low CN areas. In this case, separate estimates of S (potential maximum natural detention) and Q_d (runoff depth) should be generated and summed to obtain the cumulative runoff volume unless the low CN areas are less than 15 percent of the subbasin.

Separate CN values must be selected for the pervious and impervious areas of an urban basin or subbasin. For residential districts, for subdivisions larger than 50 acres, the percent impervious area given in Table 6.4.1.1.A must be used to compute the respective pervious and impervious areas; for subdivisions of 50 acres or less, the percentage must be computed. For proposed commercial areas, planned unit developments, etc., the percent impervious area must be computed from the site plan. For all other land uses the percent impervious area must be estimated from best available aerial topography and/or field reconnaissance. The pervious area CN value must be a weighted average of all the pervious area CNs within the subbasin. The impervious area CN value shall be 98.

Cover categories are based on existing U.S. Department of Agriculture soil survey data or ***site***-specific data where available.

Example: The following is an example of how CN values are selected for a sample project.

Select CNs for the following development:

Existing Land Use	-	forest (undisturbed)
Future Land Use	-	residential plat (3.6 DU/GA)
Basin Size	-	60 acres
Soil Type	-	80 percent Alderwood, 20 percent Ragnor

Table 3.2.2.B shows that Alderwood soil belongs to the "C" hydrologic soil group and Ragnor soil belongs to the "B" group. Therefore, for the existing condition, CNs of 70 and 55 are read from Table 6.4.1.1.A and areal weighted to obtain a CN value of 67. For the developed condition with 3.6 DU/GA the percent impervious of 39 percent is interpolated from Table 6.4.1.1.A and used to compute pervious and impervious areas of 36.6 acres and 23.4 acres, respectively. The 36.6 acres of pervious area is assumed to be in Fair condition (for a conservative design) with residential yards and lawns covering the same proportions of Alderwood and Ragnor soil (80 percent and 20 percent respectively). Therefore, CNs of 90 and 85 are read from Table 6.4.1.1.A and areal weighted to obtain a pervious area CN value of 89. The impervious area CN value is 98. The result of this example is summarized below:

On-Site Condition	Existing	Developed
Land use	Forest	Residential
Pervious area	60 ac.	36.6 ac.
CN of pervious area	67	89
Impervious area	0 ac.	23.4 ac.
CN of impervious area	--	98

Step 3: Calculate runoff depth for the developed tributary area. The rainfall-runoff equations of the NRCS curve number method relate a land area's runoff depth (precipitation excess) to the precipitation it receives and to its natural storage capacity, as follows:

$$Q_d = (P - 0.2S)^2 / (P + 0.8S) \qquad \text{for } P \geq 0.2S \qquad (6\text{-}15)$$

$$Q_d = 0 \qquad \text{for } P < 0.2S \qquad (6\text{-}16)$$

Where:

Q_d = runoff depth in inches over the area,
P = precipitation depth in inches over the area, and
S = potential maximum natural detention, in inches over the area, due to infiltration, storage, etc.

The area's potential maximum detention, S, is related to its curve number, CN:

$$S = (1000 / CN) - 10 \qquad (6\text{-}17)$$

The combination of the above equations allows for estimation of the total runoff volume by computing total runoff depth, Q_d, given the total precipitation depth, P. For example, if the curve number of the area is 70, then the value of S is 4.29. With a total precipitation for the design event of 2.0 inches, the total runoff depth would be:

$$Q_d = [2.0 - 0.2\,(4.29)]^2 / [2.0 + 0.8\,(4.29)] = 0.24 \text{ inches}$$

This computed runoff represents inches over the tributary area.

Step 4: Calculate the design wetpool volume. The total volume of runoff is found by multiplying Q_d by the area (with necessary conversions):

Total runoff volume	=	3,630	x	Q_d	x	A
(cu. ft.)		(cu. ft./ac. in.)		(in)		(ac)

If the area is 10 acres, the total runoff volume is:

3,630 cu. ft./ac. in. x 0.24 in. x 10 ac. = 8,712 cu. ft.

This is the design volume for treatment facilities for which the design criterion is based on the volume of runoff.

Step 5: Determine wetpool dimensions. Determine the wetpool dimensions satisfying the design criteria outlined below. A simple way to check the volume of each wetpool cell is to use the following equation:

$$V_b = \frac{h(A_1 + A_2)}{2} \qquad (6\text{-}18)$$

where V_b = wetpool volume (cf) (from Step 4 or as determined from the approved model)
h = wetpool depth (ft)
A_1 = water quality design surface area of wetpool (sf)
A_2 = bottom area of wetpool (sf)

Step 6: Design pond outlet pipe and determine primary overflow water surface. The design criteria for wetponds (see Section 6.4.1.2) calls for a pond outlet pipe to be placed on a reverse grade from the pond's wetpool to the outlet structure. Use the following procedure to design the pond outlet pipe and determine the primary overflow water surface elevation:

a) Use the nomographs in Section 4.3 (Figures 4.3.1.B and 4.3.1.C) to select a trial size for the pond outlet pipe sufficient to pass the WQ design flow Q_{wq}.

b) Use Figure 4.3.1.F to determine the critical depth d_c at the outflow end of the pipe for Q_{wq}.

c) Use Figure 4.2.1.G to determine the flow area A_c at critical depth.

d) Calculate the flow velocity at critical depth using continuity equation ($V_c = Q_{wq} / A_c$).

e) Calculate the velocity head V_H ($V_H = V_c^2/2g$), where g is the gravitational constant, 32.2 feet per second).

f) Determine the primary overflow water surface elevation by adding the velocity head and critical depth to the invert elevation at the outflow end of the pond outlet pipe (i.e., overflow water surface elevation = outflow invert + d_c + V_H)

g) Adjust outlet pipe diameter as needed and repeat Steps (a) through (e).

❑ LARGE WETPOND

Large wetponds are expected to meet the Sensitive Lake Protection menu goal of 50% total phosphorus removal. The actual performance of a wetpond may vary, however, due to a number of factors.

The methods of analysis presented above for basic wetponds apply to large wetponds, except that **a large wetpond requires an increased volume of 1.5 times the volume reported by the approved model, or calculated per the NRCS hand method.**

6.4.1.2 DESIGN CRITERIA

This section sets forth design criteria for the following:

- **Basic wetpond** (see below)
- **Large wetpond** (see page 6-81).

General wetpond design criteria and concepts are shown in Figure 6.4.1.A (p. 6-83).

❑ BASIC WETPOND

Wetpool Geometry

1. The wetpool shall be divided into **two cells** separated by a baffle or berm.[31] The first cell shall contain between 25 to 35 percent of the total wetpool volume. The baffle or berm volume shall not count as part of the total wetpool volume.

   Intent: The full-length berm or baffle promotes plug flow and enhances quiescence and laminar flow through as much of the entire water volume as possible. Use of a pipe and full-width manifold system to introduce water into the second cell is possible on a case-by-case basis if approved by DLS-Permitting.

2. Wetponds with wetpool volumes less than or equal to 4,000 cubic feet may be **single celled** (i.e., no baffle or berm is required).

3. Both cells of a two-cell wetpond and the single cell of a one cell wetpond must retain a permanent pool of water throughout the wet season. A wetpond is considered non-compliant if the pond level drops more than 12" in any 7 day measurement period.. A **low permeability liner** per Section 6.2.4 will be required to achieve this standard in infiltrative soils.

4. **Sediment storage** shall be provided in the first cell. The sediment storage shall have a minimum depth of 1 foot.

5. The **minimum depth of the first cell** shall be 4 feet, exclusive of sediment storage requirements. The depth of the first cell may be greater than the depth of the second cell. If the wetpool is a single cell, the volume equivalent to the first cell shall have a minimum depth of 4 feet.

[31] As used here, the term *baffle* means a vertical divider placed across the entire width of the pond, stopping short of the pond bottom. A berm is a vertical divider typically built up from the bottom, or if in a vault, connects all the way to the bottom.

6. The **maximum depth of each cell** shall not exceed 8 feet (exclusive of sediment storage in the first cell). Pool depths of 3 feet or shallower (second cell) shall be planted with emergent wetland vegetation (see **Planting requirements**).
7. Inlets and outlets shall be placed to maximize the flowpath through the facility. The **ratio of flowpath length to width** from the inlet to the outlet shall be at least 3:1. The *flowpath length* is defined as the distance from the inlet to the outlet, as measured at mid-depth. The *width* at mid-depth can be found as follows: width = (average top width + average bottom width)/2.
8. All inlets shall enter the first cell. If there are multiple inlets, the length-to-width ratio shall be based on the average flowpath length for all inlets.

Berms, Baffles, and Slopes

1. A berm or baffle shall extend across the full width of the wetpool, and tie into the wetpond side slopes. If the berm embankments are greater than 4 feet in height, the berm **must be constructed by excavating a key** equal to 50% of the embankment cross-sectional height and width. This requirement may be waived if recommended by a geotechnical engineer for specific ***site*** conditions.[32]
2. The **top of the berm shall extend** to the **WQ design water surface** or be one foot below the WQ design water surface. If at the WQ design water surface, berm side slopes must be 3H:1V. Berm side slopes may be steeper (up to 2:1) if the berm is submerged one foot.

   Intent: Submerging the berm is intended to enhance safety by discouraging pedestrian access when side slopes are steeper than 3H:1V.
3. If good vegetation cover is not established on the berm, **erosion control measures** shall be used to prevent erosion of the berm back-slope when the pond is initially filled.
4. The interior berm or baffle may be a **retaining wall** provided that the design is prepared and stamped by a ***civil engineer***. If a baffle or retaining wall is used, it shall be submerged one foot below the design water surface to discourage access by pedestrians.
5. Criteria for wetpond **side slopes** and **fencing** are given under "General Requirements for WQ Facilities," Section 6.2.3 (p. 6-23).
6. Berm **embankments** shall be the same as for detention ponds (see Section 5.1.1).
7. **Internal berms** to lengthen the flow path or allow the inlet and outlet to be at the same side of the pond may be used if an **adjustment** is granted. An adjustment may be granted only if **physical *site* constraints** prevent the standard configuration and design features promote water quality treatment. Required design features to approve an adjustment include minimizing dead spaces, minimizing turbulence, and promoting plug flow. Internal berms must extend to the 2-year water elevation, a minimum of 10 feet must be between the berms, and a distance equal to the width between the internal berms must be provided between the internal berm and the pond side at the point that the flow turns around the berm.

Inlet and Outlet

See Figure 6.4.1.A (p. 6-83) for details on the following requirements:

1. The **inlet** to the wetpond shall be **submerged** with the inlet pipe invert a minimum of two feet from the pond bottom (not including sediment storage). The top of the inlet pipe shall be submerged at least 1 foot.

[32] The geotechnical analysis must address situations in which one of the two cells is empty while the other remains full of water. These situations can occur, for example, during pump down of either cell for sediment removal, or when water from the second unlined cell percolates into the ground.

Intent: The inlet is submerged to dissipate energy of the incoming flow. The distance from the bottom is set to minimize resuspension of settled sediments. Alternative inlet designs that accomplish these objectives are acceptable.

2. An **outlet structure** shall be provided. Either a Type 2 catch basin with a grated opening (jail house window) or a manhole with a cone grate (birdcage) may be used (see Section 5.1.1.1). No sump is required in the outlet structure for wetponds not providing detention storage. The outlet structure receives flow from the pond outlet pipe. The grate or birdcage openings provide an overflow route should the pond outlet pipe become clogged. Criterion 5 below specifies the sizing and position of the grate opening.

3. The **pond outlet pipe** (as opposed to the structure outlet) shall be back-sloped or have a turn-down elbow, and extend 1 foot below the WQ design water surface. *Note: A floating outlet, set to draw water from 1 foot below the water surface, is also acceptable if vandalism concerns are adequately addressed.* **Intent:** The inverted outlet pipe provides for trapping of oils and floatables in the wetpond.

4. The **pond outlet pipe** shall be sized, at a minimum, to pass the WQ design flow. *Note: The highest invert of the outlet pipe sets the **WQ design water surface** elevation.*

5. The **overflow** criteria for single-purpose wetponds are as follows:

   a) The requirement for **primary overflow** as described for flow control ponds is satisfied by either the **grated inlet** to the outlet structure or by a **birdcage** above the pond outlet structure as shown in Figure 5.1.1.C.

   b) The bottom of the grate opening in the outlet structure shall be set at or above the height needed to pass the WQ design flow through the pond outlet pipe (see page 6-75 for sizing details). *Note: The grate invert elevation sets the **overflow water surface** elevation.*

   c) In flow-through ponds, the grated opening shall be sized to pass the 100-year design flow.

6. An **emergency spillway** shall be provided and designed according to the requirements for detention ponds (see Section 5.1.1).

7. A **gravity drain** for maintenance shall be provided if grade allows.

   Intent: It is anticipated that sediment removal will only be needed for the first cell in the majority of cases. The gravity drain is intended to allow water from the first cell to be drained to the second cell when the first cell is pumped dry for cleaning.

   a) The **drain invert** shall be at least 6 inches below the top elevation of the dividing berm or baffle. Deeper drains are encouraged where feasible, but must be no deeper than 18 inches above the pond bottom.

      Intent: to prevent highly sediment-laden water from escaping the pond when drained for maintenance.

   b) The drain shall be at least 8 inches (minimum) diameter and shall be controlled by a valve. Use of a shear gate is allowed only at the inlet end of a pipe located within an approved structure.

      Intent: Shear gates often leak if water pressure pushes on the side of the gate opposite the seal. The gate should be situated so that water pressure pushes toward the seal.

8. Operational access to the valve shall be provided to the finished ground surface.

   a) The valve location shall be accessible and well-marked with one foot of paving placed around the box. It must also be protected from damage and unauthorized operation.

   b) A valve box is allowed to a maximum depth of 5 feet without an access manhole. If over 5 feet deep, an access manhole or vault is required.

9. All metal parts shall be corrosion-resistant. Galvanized materials are discouraged where substitutes are available.

Access and Setbacks

1. The location of the pond relative to ***site*** constraints (e.g., buildings, property lines, etc.) shall be the same as for detention ponds (see Section 5.1.1). See Section 6.2.3 (p. 6-23) for typical setback requirements for WQ facilities.
2. Access and maintenance **roads** shall be provided and designed according to the requirements for detention ponds (see Section 5.1.1). Access and maintenance roads shall extend to both the wetpond inlet and outlet structures. An access ramp (7H:1V or flatter) shall be provided to the bottom of the first cell unless all portions of the cell can be reached and sediment loaded from the top of the pond. Also see Section 5.1.1, "Access Requirements" for more information on access alternatives.
3. If the **dividing berm** is also **used for access**, it must be built to sustain loads of up to 80,000 pounds.

Signage

1. General signage shall be provided according to the requirements for detention ponds (see Section 5.1.1).
2. Signage discouraging feeding of waterfowl and prohibiting swimming and wading is required. Signage is available to download from the King County Water and Land Resources Division *Surface Water Design Manual* website. This sign, or other approved equivalent sign, shall be placed for maximum visibility from adjacent streets, sidewalks, and paths. Specifications for installing the sign are shown in Figure 6.4.1.B (p. 6-85), which can be downloaded from kingcounty.gov/swdm/2021 Design Manual Drawings.

Planting Requirements

1. Planting requirements for detention ponds (see Section 5.1.1.1) also apply to wetponds.

   If the second cell of the wetpond is 3 feet or shallower, the bottom area shall be planted with emergent wetland vegetation. See Table 6.4.1.A (p. 6-82) for recommended emergent wetland plant species for wetponds.

   Intent: Planting of shallow pond areas helps to stabilize settled sediment and prevent resuspension. *Note: The recommendations in* Table 6.4.1.A *are for western Washington only. Local knowledge should be used to adapt this information if used in other areas.*
2. Cattails (*Typha latifolia*) are not allowed because they tend to crowd out other species, and the dead shoots need to be removed to prevent oxygen depletion in the wetpool.
3. If the wetpond is in a sensitive lake or sphagnum bog protection area, shrubs that form a dense cover shall be planted on slopes above the WQ design water surface on at least three sides. For banks that are berms, no planting is allowed if the berm is regulated by dam safety requirements (see Section 5.1.1). The purpose of planting is to discourage waterfowl use of the pond and to provide shading.[33] Some suitable trees and shrubs include vine maple (*Acer circinatum*), wild cherry (*Prunus emarginata*), red osier dogwood (*Cornus stolonifera*), California myrtle (*Myrica californica*), Indian plum (*Oemleria cerasiformis*), and Pacific yew (*Taxus brevifolia*) as well as numerous ornamental species.

Recommended Design Features

The following design features should be incorporated into the wetpond design where ***site*** conditions allow:

[33] Waterfowl are believed to limit use of areas where their view of predator approach paths is blocked. Some suitable native shrubs include vine maple, Indian plum, bitter cherry, red osier dogwood, cascara, and red elderberry. Ornamental hedge plants such as English laurel, privet and barberry are also good choices.

1. For wetpool depths in excess of 6 feet, it is recommended that some form of **recirculation** be provided in the summer, such as a fountain or aerator, to prevent stagnation and low dissolved oxygen conditions. A special use permit is needed for a pump or fountain in a County maintained pond.
2. A flow length-to-width ratio greater than the 3:1 minimum is desirable. If the ratio is 4:1 or greater, then the **dividing berm is not required**, and the pond may consist of one cell rather than two.
3. A **tear-drop shape**, with the inlet at the narrow end, rather than a rectangular pond is preferred since it minimizes dead zones caused by corners.
4. A small amount of **base flow** may maintain circulation and reduce the potential for low oxygen conditions during late summer.
5. Evergreen or columnar deciduous **trees along the west and south sides** of ponds are recommended to reduce thermal heating, except that no trees or shrubs shall be planted on berms meeting the criteria of dams regulated for safety (see "Dam Safety Compliance" in Section 5.1.1). In addition to shade, trees and shrubs also discourage waterfowl use and the attendant phosphorus enrichment problems they cause. Trees should be set back so that the branches will not extend over the pond.

   Intent: Evergreen trees or shrubs are preferred to avoid problems associated with leaf drop. Columnar deciduous trees (e.g., hornbeam, Lombardy poplar, etc.) typically have fewer leaves than other deciduous trees.
6. The **number of inlets** to the facility should be limited; ideally there should be only one inlet. The flowpath length should be maximized from inlet to outlet for all inlets to the facility.
7. The **access and maintenance road** could be extended along the full length of the wetpond and could double as playcourts or picnic areas. Placing finely ground bark or other natural material over the road surface would render it more pedestrian friendly.
8. **Stormwater tracts** may be credited to meet recreational space requirements under some circumstances (criteria in KCC 21A.14.180.D) or may sometimes be located in open space set aside through the four to one program. See Section 5.1.1.1 for details.
9. The following design features should be incorporated to enhance aesthetics where possible:
   a) Subject to dam safety restrictions (WAC 175-175), provide visual enhancement with clusters of trees and shrubs around the wetpond, above the emergency overflow water surface elevation. In most pond areas, it is important to amend the soil with compost before planting since ponds are typically placed well below the native soil horizon in very poor soils. Compost must meet quality criteria in Reference 11-C.
   b) Orient the pond length along the direction of prevailing summer winds (typically west or southwest) to enhance aeration.[34] This is beneficial for both aesthetics and treatment.

Construction Considerations

1. Sediment that has accumulated in the pond must be removed after construction in the drainage area of the pond is complete (unless used for a liner—see Criteria 2 below). If no more than 12 inches of sediment have accumulated after plat construction, cleaning may be left until after building construction is complete. In general, sediment accumulation from stabilized drainage areas is not expected to exceed an average of 4 inches per year in the first cell. If sediment accumulation is greater than this amount, it will be assumed to be from construction unless it can be shown otherwise.

[34] Wind moving over the surface of standing water can often induce some mixing of surface and near-surface water, replenishing oxygen and reducing stagnant conditions. If the pond is aligned with the prevailing wind direction, this effect can be maximized. (this appears as an add, but is actually a move, and is verbatim from the 2009 SWDM. Consider deletion along with text. *See Bentzen et al. 2009. Predictions of Resuspension of Highway Detention Pond Deposits in Interrain Event Periods due to Wind-Induced Currents and Waves. Journal of Environmental Engineering 135 (12):1286-1293*

The County will not release maintenance and defect financial guarantees or assume maintenance responsibility for a facility unless it has been cleaned of construction phase sediments.

2. Sediment that has accumulated in the pond at the end of construction may be used as a liner in excessively drained soils if the sediment meets the criteria for low permeability or treatment liners defined in Section 6.2.4 (p. 6-27) and in keeping with guidance given in Table 6.2.4.A (p. 6-29). Sediment used for a soil liner must be graded to provide uniform coverage and thickness.

Maintenance Considerations

1. The pond should be inspected annually. Floating debris and accumulated petroleum products should be removed as needed, but at least annually.
2. Nearby vegetation should be trimmed as necessary to keep the pond free of leaves and to maintain the aesthetic appearance of the area. Slope areas that have become bare should be revegetated and eroded areas should be regraded prior to being revegetated.
3. Sediment should be removed when the 1-foot sediment zone is full plus 6 inches. Sediments should be tested for toxicants in compliance with current disposal requirements if land uses in the catchment include commercial or industrial zones, or if visual or olfactory indications of pollution are noticed.
4. Water drained or pumped from ponds prior to sediment removal may be discharged to storm drains if it is not excessively turbid (i.e., if water appears translucent when held to light) and if floatable debris and visual petroleum sheens are removed. Excessively turbid water (i.e., water appears opaque when held to light) should be discharged only after the solids have been settled and removed.
5. Pumping rates should be slow enough so that downstream channel erosion problems do not develop.

❑ LARGE WETPOND

All design criteria for **basic wetponds** shall apply to large wetponds, with the following **modifications:**

1. The wetpool for a large wetpond shall have a volume equal to 1.5 times the Basic wetpond volume described above.
2. If the project is subject to the Sensitive Lake Protection menu or the Sphagnum Bog Protection menu, the following shall apply:

   a) Shrubs that form a dense cover shall be planted along the top of the wetpond bank on cut slopes. **Planting** is recommended for bermed slopes, except for berms meeting the criteria of dams regulated for safety (see "Dam Safety Compliance" in Section 5.1.1). Evergreen trees and shrubs are preferred.

      Intent: Trees and shrubs discourage waterfowl use. Waterfowl tend to avoid areas that are not visually open.

   b) Measures to enhance **waterfowl habitat value** (e.g., nesting structures) are not allowed.

TABLE 6.4.1.A EMERGENT WETLAND PLANT SPECIES RECOMMENDED FOR WETPONDS

Species	Common Name	Notes	Maximum Depth
INUNDATION TO 1 FOOT			
Agrostis exarata(1)	Spike bent grass	Prairie to coast	to 2 feet
Carex stipata	Sawbeak sedge	Wet ground	
Eleocharis palustris	Spike rush	Margins of ponds, wet meadows	to 2 feet
Glyceria occidentalis	Western mannagrass	Marshes, pond margins	to 2 feet
Juncus effusus	Soft rush	Wet meadows, pastures, wetland margins	to 2 feet
Juncus tenuis	Slender rush	Wet soils, wetland margins	
Oenanthe sarmentosa	Water parsley	Shallow water along stream and pond margins; needs saturated soils all summer	
Scirpus atrocinctus (formerly S. cyperinus)	Woolgrass	Tolerates shallow water; tall clumps	
Scirpus microcarpus	Small-fruited bulrush	Wet ground to 18 inches depth	18 inches
Sagittaria latifolia	Arrowhead		
INUNDATION 1 TO 2 FEET			
Agrostis exarata(1)	Spike bent grass	Prairie to coast	
Alisma plantago-aquatica	Water plantain		
Eleocharis palustris	Spike rush	Margins of ponds, wet meadows	
Glyceria occidentalis	Western mannagrass	Marshes, pond margins	
Juncus effusus	Soft rush	Wet meadows, pastures, wetland margins	
Scirpus microcarpus	Small-fruited bulrush	Wet ground to 18 inches depth	18 inches
Sparganium emmersum	Bur reed	Shallow standing water, saturated soils	
INUNDATION 1 TO 3 FEET			
Carex obnupta	Slough sedge	Wet ground or standing water	1.5 to 3 feet
Beckmania syzigachne(1)	Western sloughgrass	Wet prairie to pond margins	
Scirpus acutus(2)	Hardstem bulrush	Single tall stems, not clumping	to 3 feet
Scirpus validus(2)	Softstem bulrush		
INUNDATION GREATER THAN 3 FEET			
Nuphar polysepalum	Spatterdock	Deep water	3 to 7.5 feet
Nymphaea odorata(1)	White waterlily	Shallow to deep ponds	to 6 feet

Notes:

(1)Non-native species. *Beckmania syzigachne* is native to Oregon. Native species are preferred.

(2)*Scirpus* tubers must be planted shallower for establishment, and protected from foraging waterfowl until established. Emerging aerial stems should project above water surface to allow oxygen transport to the roots.

Primary sources: Municipality of Metropolitan Seattle, *Water Pollution Control Aspects of Aquatic Plants*, 1990. Hortus Northwest, *Wetland Plants for Western Oregon*, Issue 2, 1991. Hitchcock and Cronquist, *Flora of the Pacific Northwest*, 1973.

FIGURE 6.4.1.A WETPOND

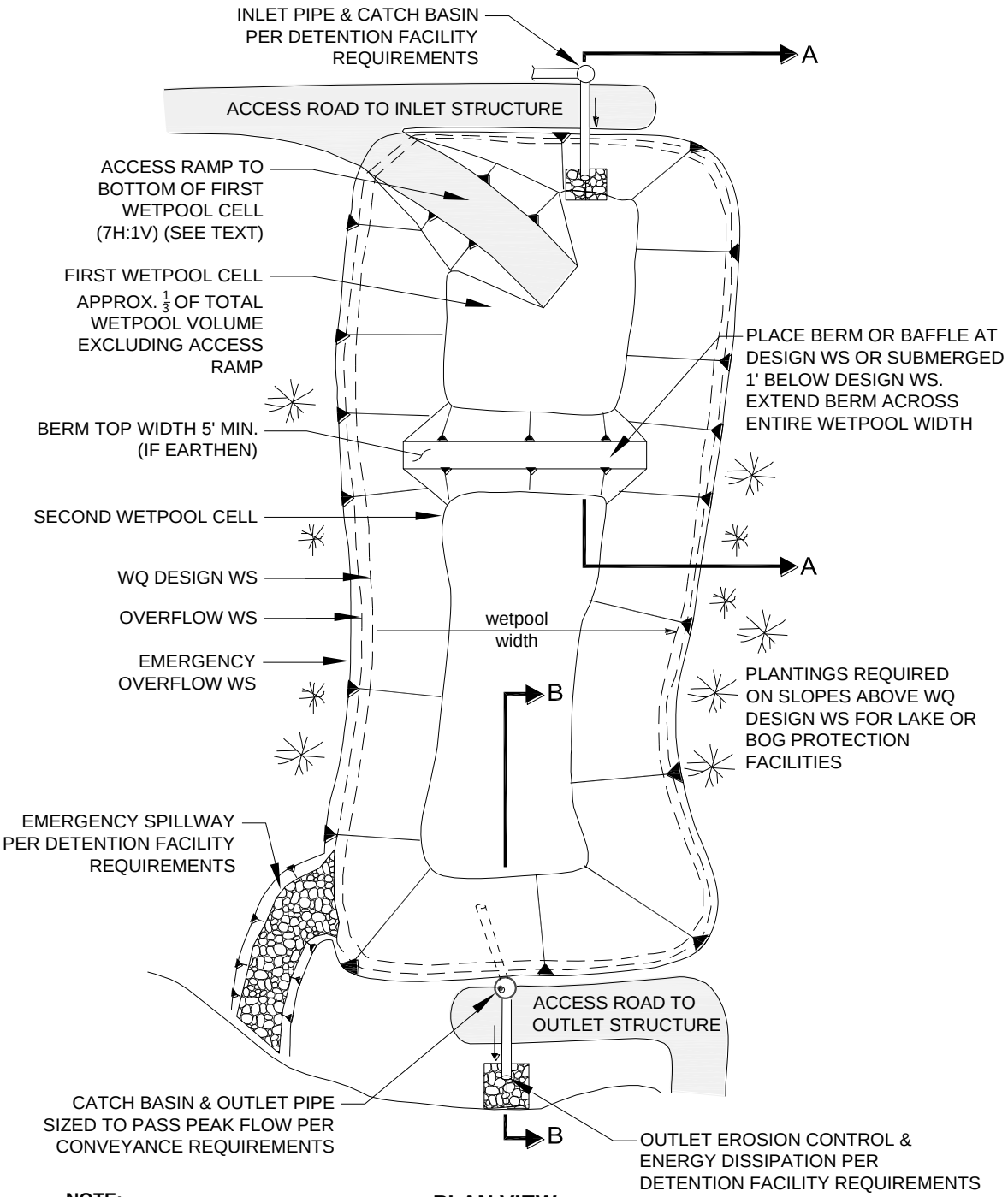

NOTE:
BERM NOT REQUIRED FOR PONDS WITH LENGTH TO WIDTH RATIO 4:1 OR IF VOLUME LESS THAN 4000 C.F.

PLAN VIEW
NTS

FIGURE 6.4.1.A WETPOND (*CONTINUED*)

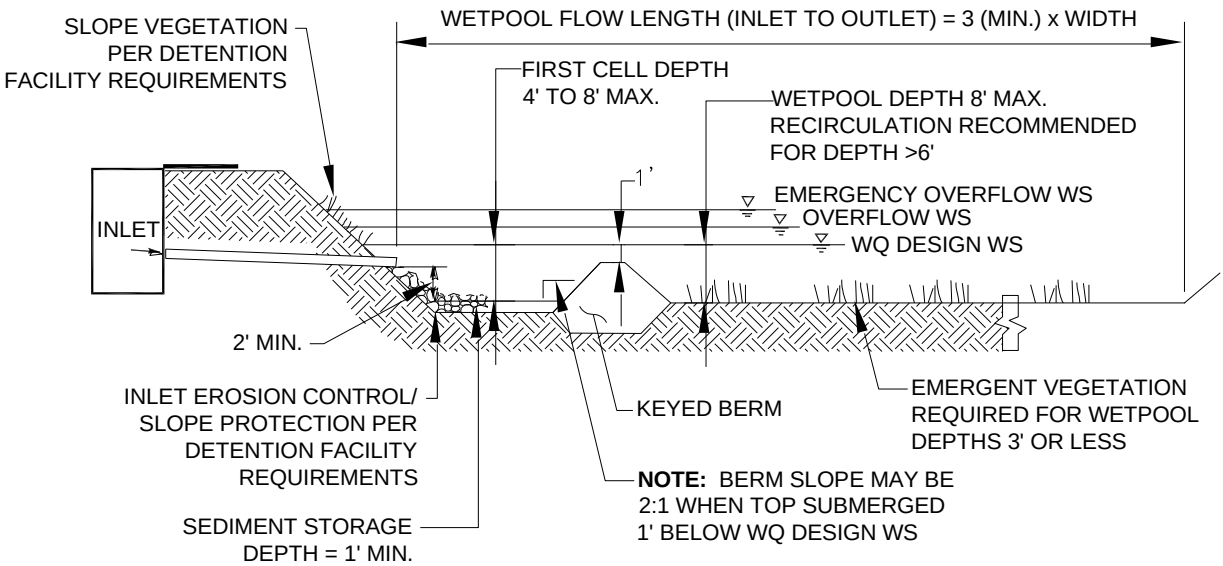

SECTION A-A
NTS

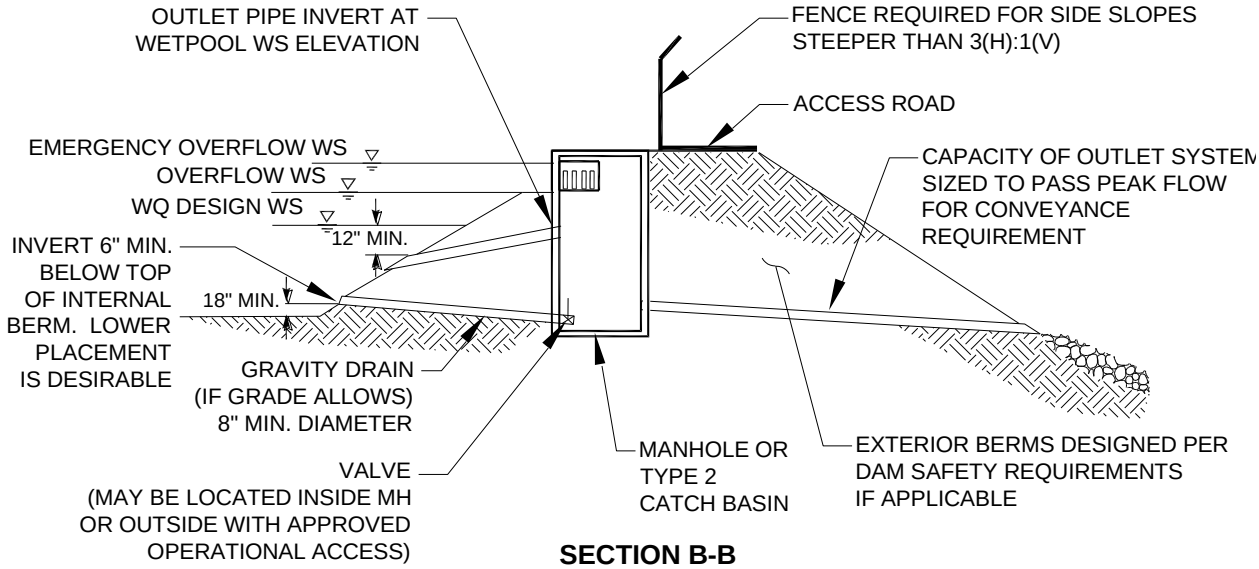

SECTION B-B
NTS

NOTE:
SEE DETENTION FACILITY REQUIREMENTS FOR LOCATION AND SETBACK REQUIREMENTS.

FIGURE 6.4.1.B WATERFOWL SIGNAGE

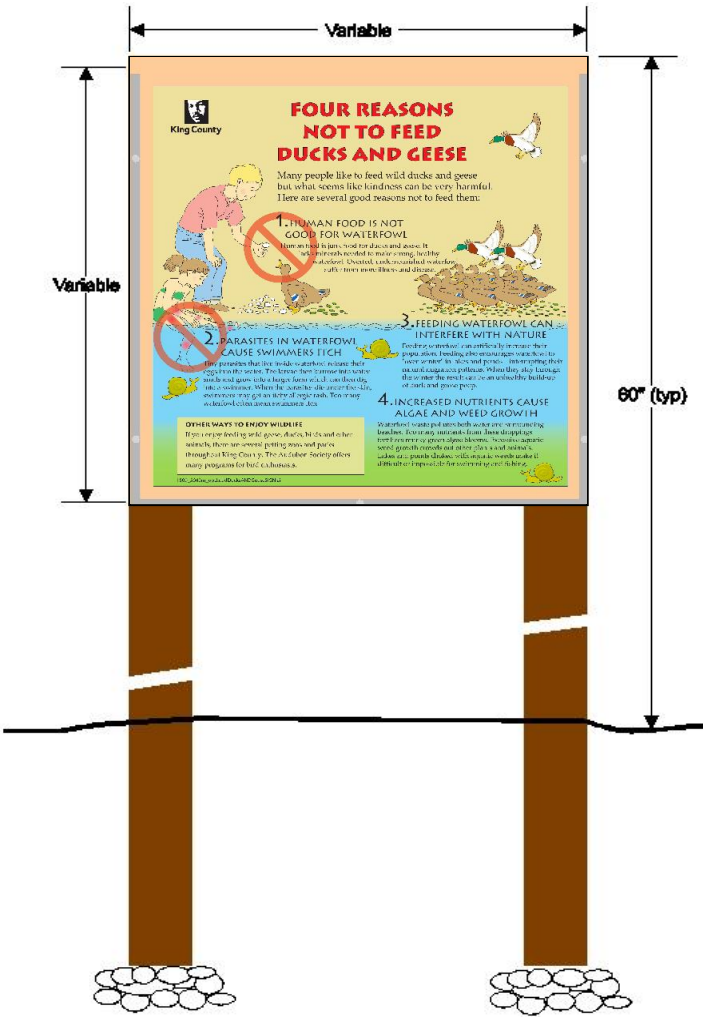

Specifications:

Size:	Variable. Minimum 2' x 2'
Substrate:	½" MDO plywood, primed and finish coated in Beige enamel.
Face:	Digital print on 3M Control Tack material with a UV overlay.
Graffiti Protection:	$^1/_8$" Lexan panel covered in 3M 2980 Protective Overlay, then mounted to substrate with anti-reversing screws.
Posts:	Pressure treated 4" x 4" posts.
Installation:	Mount digital print centered both directions to a beige substrate 2" larger in both directions than print. Secure substrate to 4" x 4" post with four to six - 2½" wood screws depending on size, ½" on center from edge of plywood. Attach double sided automotive tape to both edges and bottom edge of the plywood covering the wood screws then attach the Lexan panel with the protective overlay facing outward. Additional secure the Lexan with 2 to 3 anti-reversible screws down each side centered in the automotive tape and one centered in the bottom. Attach a plywood cap the same length as the substrate and six inches wide with 2½" wood screws centered over the posts and sign.

6.4.2 WETVAULTS

A *wetvault* is an underground structure similar in appearance to a detention vault, except that a wetvault has a permanent pool of water that dissipates energy and improves the settling of particulate pollutants (see the wetvault details, Figure 6.4.2.A on page 6-91). Being underground, the wetvault lacks the biological pollutant removal mechanisms, such as algae uptake, present in surface wetponds.

Applications and Limitations

A wetvault may be used in any type or size of development. However, it is most practical in relatively small catchments (less than 10 acres of impervious surface) with high land values because vaults are relatively expensive. Combined detention and wetvaults are allowed; see Section 6.4.4 (p. 6-98).

A wetvault is believed to be ineffective in removing dissolved pollutants such as soluble phosphorus or metals such as copper. There is also concern that oxygen levels will decline, especially in warm summer months, because of limited contact with air and wind. However, the extent to which this potential problem occurs has not been documented.

If oil control is required for a project, the wetvault may be combined with the **baffle oil/water separator** facility (see Section 0, p. 6-140) to fulfill Special Requirement #5, "Oil Control" (see Option 5, Section 6.1.5, p. 6-15). *Consult the water quality menus in Section 6.1 (p. 6-3) for information on how this facility may be used to meet Core Requirement #8 and Special Requirement #5.*

6.4.2.1 METHODS OF ANALYSIS

As with wetponds, the primary design factor that determines the removal efficiency of a wetvault is the volume of the wetpool in relationship to the volume of runoff . The larger the volume, the higher the potential for pollutant removal. Performance is also improved by avoiding dead zones (like corners) where little exchange occurs, using large length-to-width ratios, dissipating energy at the inlet, and ensuring that flow rates are uniform to the extent possible and not increased between cells.

Wetvaults sized using the design methodology below (with a volume equal to the 91% treatment volume per Section 6.2.1) and following the required design criteria in Section 6.4.2.2 are expected to meet the Basic WQ menu goal of 80% TSS removal.

The methods of analysis for a wetvault are **identical to the methods of analysis for the wetpond**. Follow the procedure specified in Section 6.4.1.1 (p. 6-72) to determine the wetpool volume for a wetvault.

6.4.2.2 DESIGN CRITERIA

Typical design details and concepts for a wetvault are shown in Figure 6.4.2.A (p. 6-91).

Wetpool Geometry

Same as specified for **wetponds** (see Section 6.4.1.2, p. 6-76) except for the following **two modifications:**

1. **Criterion 3:** The **sediment storage** in the first cell shall be an average of 1 foot. Because of the v-shaped bottom, the depth of sediment storage needed above the bottom of the side wall is roughly proportional to vault width according to the schedule below:

Vault Width	Sediment Depth (from bottom of side wall)
15'	10"
20'	9"
40'	6"
60'	4"

2. **Criterion 5:** The second cell shall be a minimum of 3 feet deep since planting cannot be used to prevent resuspension of sediment in shallow water as it can in open ponds.

Vault Structure

1. Wetvaults shall be designed as flow-through systems.
2. The vault shall be separated into two cells by a **wall** or a **removable baffle**.[35] If a **wall or non-removable baffle** is used, a 5-foot by 10-foot removable maintenance access must be provided for both cells. If a removable baffle is used, the following criteria apply:
   a) The baffle shall extend from a minimum of 1-foot above the WQ design water surface to a minimum of 1 foot below the invert elevation of the inlet pipe.
   b) The lowest point of the baffle shall be a minimum of 2 feet from the bottom of the vault, and greater if feasible.
3. If the vault is less than 2,000 cubic feet (inside dimensions) or if the length-to-width ratio of the vault pool is 5:1 or greater, the **baffle or wall** may be omitted and the vault may be one-celled.
4. The two cells of a wetvault shall not be divided into additional subcells by **internal walls**. If internal structural support is needed, post and pier construction may be used to support the vault lid rather than walls. Any walls used within cells must be positioned so as to lengthen, rather than divide, the flowpath.

   Intent: Treatment effectiveness in wetpool facilities is related to the extent to which plug flow is achieved and short-circuiting and dead zones are avoided. Structural walls placed within the cells can interfere with plug flow and create significant dead zones, reducing treatment effectiveness.
5. Internal walls to lengthen the flow path or allow the inlet and outlet to be at the same side of the vault may be used if an **adjustment** is granted. An adjustment may be granted only if **physical *site* constraints** prevent the standard configuration and design features promote water quality treatment. Required design features to approve an adjustment include minimizing dead spaces, minimizing turbulence, and promoting plug flow. Internal walls must extend to the 2-year water elevation, a minimum of 10 feet must be between the walls, and a distance equal to the width between the internal walls must be provided between the internal wall and the vault wall at the point that the flow turns around the wall. All vault requirements apply to each length/segment.

   Intent: Confined movement around the internal walls creates turbulence, creates dead zones and decreases treatment effectiveness.
6. The bottom of the first cell shall be sloped toward the access opening. Slope shall be between 0.5 percent (minimum) and 2 percent (maximum). The second cell may be level (longitudinally) sloped toward the outlet, with a high point between the first and second cells.
7. The **vault bottom** shall slope laterally a minimum of 5% from each side towards the center, forming a broad "v" to facilitate sediment removal. *Note: More than one "v" may be used to minimize vault depth.*

   Exception: The vault bottom may be flat if **removable panels** are provided over the entire vault. Removable panels shall be at grade, have stainless steel lifting eyes, and weigh no more than 5 tons per panel.
8. The highest point of a **vault bottom** must be at least 6 inches below the outlet elevation to provide for sediment storage over the entire bottom.
9. Provision for passage of flows should the outlet plug shall be provided.

[35] As used here, the term *baffle* means a divider that does not extend all the way to the bottom of the vault, or if a bottom baffle, does not extend all the way to the top of the water surface. A *wall* is used here to mean a divider that extends all the way from near the water surface to the bottom of the vault.

10. Wetvaults may be constructed using **arch culvert sections** provided the top area at the WQ design water surface is, at a minimum, equal to that of a vault with vertical walls designed with an average depth of 6 feet. If arched culverts are used, the manufacturer must certify that they are water-tight.

    Intent: To prevent decreasing the surface area available for oxygen exchange.

11. Wetvaults shall conform to the **"Materials"** and **"Structural Stability"** criteria specified for **detention vaults** in Section 5.1.3.

12. Where pipes enter and leave the vault below the WQ design water surface, they shall be **sealed** using a non-porous, non-shrinking grout.

Inlet and Outlet

1. The **inlet** to the wetvault shall be submerged with the inlet pipe invert a minimum of 3 feet from the vault bottom (not including sediment storage). The top of the inlet pipe shall be submerged at least 1 foot. *Note: These dimensional requirements may increase the minimum 4 foot depth of the first cell, depending on the size of the inlet pipe.*

Intent: The submerged inlet is to dissipate energy of the incoming flow. The distance from the bottom is to minimize resuspension of settled sediments. Alternative inlet designs that accomplish these objectives are acceptable.

2. Unless designed as an off-line facility, the capacity of the **outlet pipe** and available head above the outlet pipe shall be designed to convey the 100-year design flow for developed ***site*** conditions (as described in Section 5.1.4.2) without overtopping the vault. The available head above the outlet pipe must be a minimum of 6 inches.

3. The outlet pipe shall be back-sloped or have tee section, the lower arm of which shall extend 1 foot below the WQ design water surface to provide for trapping of oils and floatables in the vault.

4. A **gravity drain** for maintenance shall be provided if grade allows.

    a) The gravity drain should be as low as the ***site*** situation allows; however, the **invert** shall be no lower than the average sediment storage depth. At a minimum, the invert shall be 6 inches above the base elevation of the vault side walls.

    Intent: This placement prevents highly sediment-laden water from escaping when the vault is drained for maintenance. A lower placement is allowed than for wetponds since the v-shaped vault bottom will capture and retain additional sediments.

    b) The drain shall be 8 inches (minimum) diameter and shall be controlled by a valve. Use of a shear gate is allowed only at the inlet end of a pipe located within an approved structure.

    Intent: Shear gates often leak if water pressure pushes on the side of the gate opposite the seal. The gate should be situated so that water pressure pushes toward the seal.

    c) Operational access to the valve shall be provided to the finished ground surface. The valve location shall be accessible and well marked with one foot of paving placed around the box. It must also be protected from damage and unauthorized operation.

    d) If not located in the vault, a valve box is allowed to a maximum depth of 5 feet without an access manhole. If over 5 feet deep, an access manhole is required.

Access Requirements

Same as for detention vaults (see Section 5.1.3). *Note: If the 5-foot by 10-foot removable maintenance access also provides inlet/outlet access, then a 3-foot by 3-foot inspection port must be provided at the inlet pipe and outlet structure.*

Ventilation Requirements

A minimum of 50 square feet of **grate** shall be provided over the second cell. For vaults in which the surface area of the second cell is greater than 1,250 square feet, 4% of the total surface area shall be grated. This requirement may be met by one grate or by many smaller grates distributed over the second cell area. If the vault is a single cell, ventilation shall be provided over the second half of the vault. *Note: a grated access door may be used to meet this requirement.*

Intent: The grate allows air contact with the wetpool in order to minimize stagnant conditions that can result in oxygen depletion, especially in warm weather.

Access Roads, Right of Way, and Setbacks

Same as for detention vaults (see Section 5.1.3).

Recommended Design Features

The following design features should be incorporated into wetvaults where feasible, but they are not specifically required:

1. The floor of the second cell should slope toward the outlet for ease of cleaning.
2. The **inlet and outlet** should be at opposing corners of the vault to increase the flowpath.
3. A **flow length-to-width** ratio greater than 3:1 minimum is desirable.
4. **Lockable grates** instead of solid manhole covers are recommended to increase air contact with the wetpool.
5. **Galvanized materials** should be avoided whenever possible.
6. The **number of inlets** to the wetvault should be limited, and the flowpath length should be maximized from inlet to outlet for all inlets to the vault.

Construction Considerations

Sediment that has accumulated in the vault must be removed after construction in the drainage area is complete. If no more than 12 inches of sediment have accumulated after the infrastructure is built, cleaning may be left until after building construction is complete. In general, sediment accumulation from stabilized drainage areas is not expected to exceed an average of 4 inches per year in the first cell. If sediment accumulation is greater than this amount, it will be assumed to be from construction unless it can be shown otherwise. The County will not release maintenance and defect financial guarantees or assume maintenance responsibility for a facility unless it has been cleaned of construction phase sediments.

Maintenance Considerations

1. Accumulated sediment and stagnant conditions may cause noxious gases to form and accumulate in the vault.
2. Facilities should be inspected annually. Floating debris and accumulated petroleum products shall be removed as needed, but at least annually. The floating oil shall be removed from wetvaults used as oil/water separators when oil accumulation exceeds one inch.
3. Sediment should be removed when the 1-foot (average) sediment zone is full thus 6 inches. Sediments should be tested for toxicants in compliance with current disposal requirements if land uses in the catchment include commercial or industrial zones, or if visual or olfactory indications of pollution are noticed.
4. Water drained or pumped from the vault prior to removing accumulated sediments may be discharged to storm drains if it is not excessively turbid (i.e., if water appears translucent when held to light) and if all floatable debris and visual petroleum sheens are removed. Excessively turbid water (i.e., water

appears opaque when held to light) should be discharged only after the settleable solids have been removed.

❑ MODIFICATIONS FOR COMBINING WITH A BAFFLE OIL/WATER SEPARATOR

If the ***project site*** is a ***high-use site*** and a wetvault is proposed to meet the Basic WQ menu criteria, the vault may be combined with a baffle oil/water separator (see Section 0) to meet the requirements of Special Requirement #5 with one facility rather than two. Structural modifications and added design criteria are given below. However, the maintenance requirements for baffle oil/water separators must be adhered to, in addition to those for a wetvault. This will result in more frequent inspection and cleaning than for a wetvault used only for TSS removal. See page 6-150 for information on maintenance of baffle oil/water separators.

1. The sizing procedures for the baffle oil/water separator (p. 6-141) should be run as a check to ensure the vault is large enough. If the oil/water separator sizing procedures result in a larger vault size, increase the wetvault size to match.
2. An **oil retaining baffle** shall be provided in the second cell near the vault outlet. The baffle should not contain a high-flow overflow, or else the retained oil will be washed out of the vault during large storms.
3. The vault shall have a minimum **length-to-width ratio** of 5:1.
4. The vault shall have a design water **depth-to-width** ratio of between 1:3 to 1:2.
5. The vault shall be **watertight** and shall be coated to protect from corrosion.
6. Separator vaults shall have a **shutoff mechanism** on the outlet pipe to prevent oil discharges during maintenance and to provide emergency shut-off capability in case of a spill. A valve box and riser shall also be provided.
7. Wetvaults used as oil/water separators must be **off-line** and must bypass flows greater than the **off-line** WQ design flow described in Section 6.2.1

   Intent: This design minimizes the entrainment and/or emulsification of previously captured oil during very high flow events.

FIGURE 6.4.2.A WETVAULT

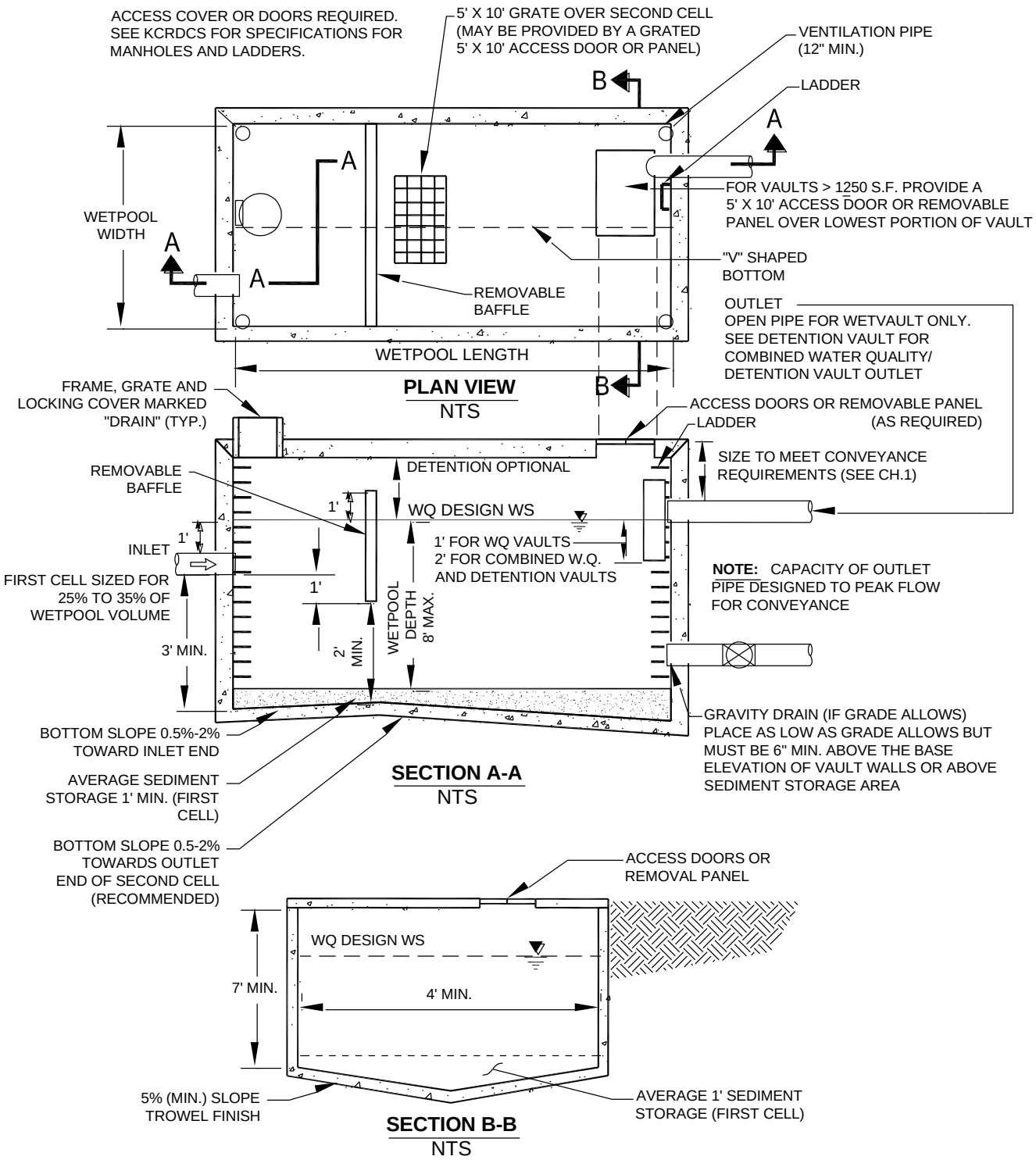

6.4.3 STORMWATER WETLANDS

In land development situations, wetlands are usually constructed for two main reasons: to replace or mitigate impacts when natural wetlands are filled or impacted by development (mitigation wetlands), and to treat stormwater runoff (stormwater treatment wetlands). *Stormwater wetlands* are shallow man-made ponds that are designed to treat stormwater through the biological processes associated with emergent aquatic plants (see the stormwater wetland details in Figure 6.4.3.A, p. 6-96, and Figure 6.4.3.B, p. 6-97).

In King County, wetlands created to mitigate disturbance impacts, such as filling, shall not also be used as stormwater treatment facilities. This is because of the different, incompatible functions of the two kinds of wetlands. **Mitigation wetlands** are intended to function as full replacement habitat for fish and wildlife, providing the same functions and harboring the same species diversity and biotic richness as the wetlands they replace. **Stormwater treatment wetlands** are used to capture and transform pollutants, just as wetponds are, and over time the sediment will concentrate pollutants. This is not a healthy environment for aquatic life. Stormwater treatment wetlands are used to capture pollutants in a managed environment **so that they will not reach natural wetlands and other ecologically important habitats**. In addition, vegetation must be harvested and sediment dredged in stormwater treatment wetlands, further interfering with use for wildlife habitat.

In general, stormwater wetlands perform well to remove sediment, metals, and pollutants which bind to humic or organic acids. Phosphorus removal in stormwater wetlands is highly variable.[36]

Applications and Limitations

This stormwater wetland design occupies about the same surface area as wetponds, but has the potential to be better integrated aesthetically into a ***site*** because of the abundance of emergent aquatic vegetation. The most critical factor for a successful design is the provision of an **adequate supply of water** for most of the year to replace any lost by infiltration or evapotranspiration. Careful planning is needed to be sure sufficient water will be retained to sustain good wetland plant growth. Since water depths are shallower than in wetponds, water loss by evapotranspiration is an important concern, especially during the relatively warm dry season. Stormwater wetlands may be a good WQ facility choice in areas with high winter groundwater levels, if there is also some pond intrusion of summer base flow.

Consult the water quality menus in Section 6.1 (p. 6-3) for information on how this facility may be used to meet Core Requirement #8.

6.4.3.1 METHODS OF ANALYSIS

When used for stormwater treatment, stormwater wetlands employ some of the same design features as wetponds. However, in addition to gravity settling, some degree of pollutant removal is mediated by aquatic vegetation and the microbiological community associated with that vegetation. When designing wetlands, water volume and factors which affect plant vigor and biomass are all concerns.

Stormwater wetlands designed and constructed using the criteria below are expected to meet both the Basic and Enhanced Basic water quality treatment goals.

Steps 1 through 5: Determine the volume of a basic wetpond. Follow Steps 1 through 5 for wetponds (see Section 6.4.1.1, p. 6-72). The volume of a basic wetpond is used as a template for sizing the stormwater wetland.

[36] Richardson, C. 1987. "Mechanisms controlling phosphorus retention capacity in freshwater wetlands," *Science*, 228: 1424.

Step 6: Calculate the surface area of the stormwater wetland. The surface area of the wetland shall be the same as the top area of a wetpond sized for the same ***site*** conditions. Calculate the surface area of the stormwater wetland by using the volume from Step 5 and dividing by the average water depth (use 3 feet).

Step 7: Determine the surface area of the first cell of the stormwater wetland. Use the volume determined from Criterion 2 under "Wetland Geometry" (p. 6-93, below), and the actual depth of cell 1.

Step 8: Determine the surface area of the wetland cell. Subtract the surface area of the first cell (Step 7) from the total surface area (Step 6).

Step 9: Determine water depth distribution in the second cell. Decide if the top of the dividing berm will be at the surface or submerged (designer's choice). Adjust the distribution of water depths in the second cell according to Criterion 8 under "Wetland Geometry" below. *Note: This will result in a facility that holds less volume than that determined in Step 5 above. This is acceptable.*

> **Intent:** The surface area of the stormwater wetland is set to be roughly equivalent to that of a wetpond designed for the same ***project site*** so as not to discourage use of this option.

Step 10: Choose plants. See Table 6.4.1.A (p. 6-82) for a list of plants recommended for wetpond water depth zones, or consult a wetland scientist.

6.4.3.2 DESIGN CRITERIA

Typical details for a **stormwater wetland** are shown in Figure 6.4.3.A (p. 6-96) and Figure 6.4.3.B (p. 6-97).

Wetland Geometry

1. Stormwater wetlands shall consist of two cells, a presettling cell and a wetland cell.
2. The **presettling cell** shall contain a volume equal to approximately one-third of the wetpool volume calculated in Steps 1 through 5 of "Methods of Analysis," Section 6.4.3.1.
3. The **depth of the presettling cell** shall be between 4 feet (minimum) and 8 feet (maximum).
4. One foot of **sediment storage** shall be provided in the presettling cell.
5. The **wetland cell** shall have an average **water depth** of about 1.5 feet (plus or minus 3 inches).
6. The **"berm"** separating the two cells shall be shaped such that its downstream side gradually slopes to form the second shallow wetland cell (see the section view in Figure 6.4.3.A, p. 6-96). Alternatively, the second cell may be graded naturalistically from the top of the dividing berm (see Criterion 8 below).
7. The **top of berm** shall be either at the WQ design water surface or submerged 1 foot below the WQ design water surface, as with wetponds. Correspondingly, the **side slopes** of the berm must meet the following criteria:
   a) If the top of berm is at the WQ design water surface, the berm side slopes shall be no steeper than 3H:1V.
   b) If the top of berm is submerged 1 foot, the upstream side slope may be up to 2H:1V.[37]
8. Two options (A and B) are provided for **grading the bottom of the wetland cell**. Option A is a shallow, evenly graded slope from the upstream to the downstream edge of the wetland cell (see Figure 6.4.3.A, p. 6-96).

[37] If the berm is at the water surface, then for safety reasons, its slope must be no greater than 3:1, just as the pond banks must be 3:1 if the pond is not fenced. A steeper slope (2:1 rather than 3:1) is allowed if the berm is submerged in 1 foot of water. If submerged, the berm it is not considered accessible, and the steeper slope is allowed.

Option B is a "naturalistic" alternative, with the specified range of depths intermixed throughout the second cell (see Figure 6.4.3.B, p. 6-97). A **distribution of depths** shall be provided in the wetland cell depending on whether the dividing berm is at the water surface or submerged (see Table 6.4.3.A, below).

The maximum depth is 2.5 feet in either configuration.

TABLE 6.4.3.A DISTRIBUTION OF DEPTHS IN WETLAND CELL (OPTION B)			
DIVIDING BERM AT WQ DESIGN WATER SURFACE		DIVIDING BERM SUBMERGED 1 FOOT	
Depth Range (feet)	Percent of cell 2 surface area	Depth Range (feet)	Percent of cell 2 surface area
0.1 to 1	25	1 to 1.5	40
1 to 2	55	1.5 to 2	40
2 to 2.5	20	2 to 2.5	20

Lining Requirements

1. **In infiltrative soils**, both cells of the stormwater wetland shall be lined. To determine whether a low-permeability liner or a treatment liner is required, determine whether the following conditions will be met. If low soil permeability will ensure sufficient water retention, lining may be waived.

   - The first cell of a treatment wetland must retain a permanent pool of water throughout the wet season. It is considered non-compliant if the pond level drops more than 12” in any 7 day measurement period. A low permeability liner, per Section 6.2.4 will be required to achieve this standard in infiltrative soils.
   - The second cell must retain water for at least 10 months of the year.
   - The complete historical precipitation record should be used in the approved model when establishing these conditions.

   Intent: Many wetland plants can adapt to periods of summer drought, so a limited drought period is allowed in the second cell. This may allow a treatment liner rather than a low permeability liner to be used for the second cell. The first cell must retain a permanent pool of water throughout the wet season in order for the presettling function to be effective.

2. If a **low permeability liner** is used, a minimum of 18 inches of native soil amended with good topsoil or compost (one part compost mixed with 3 parts native soil) must be placed over the liner. Compost must be Specification 1 Compost detailed in Reference 11-C. For **geomembrane or geotextile liner**, a soil depth of 3 feet covering the liner is required to prevent damage to the liner during planting. Hydric soils are not required.

3. The criteria for liners given in Section 6.2.4 (p. 6-27) must be observed.

Inlet and Outlet

Same as for basic wetponds (see page 6-77) but with the added requirement that spill control be provided as detailed in Section 4.2.1.1 prior to discharge of runoff from non-roof-top ***pollution generating impervious surface*** into the stormwater wetland.

Access and Setbacks

1. Location of the stormwater wetland relative to ***site*** constraints (e.g., buildings, property lines, etc.) shall be the same as for detention ponds (see Section 5.1.1). See Section 6.2.3 (p. 6-23) for typical setback requirements for WQ facilities.
2. Access and maintenance **roads** shall be provided and designed according to the requirements for detention ponds (see Section 5.1.1). Access and maintenance roads shall extend to both the wetland inlet and outlet structures. An access ramp (7H minimum:1V) shall be provided to the bottom of the first cell unless all portions of the cell can be reached and sediment loaded from the top of the wetland side slopes. Also see "Access Requirements" in Section 5.1.1, for more information on access alternatives.
3. If the dividing berm is also used for access, it must be built to sustain loads of up to 80,000 pounds.

Signage

1. General signage shall be provided according to the requirements for detention ponds (see Section 5.1.1).
2. Signage discouraging feeding of waterfowl and prohibiting swimming and wading is required. Signage is available to download from the King County Water and Land Resources Division *Surface Water Design Manual* website. This sign, or other approved equivalent sign, shall be placed for maximum visibility from adjacent streets, sidewalks, and paths. Specifications for installing the sign are shown in Figure 6.4.1.B (p. 6-85), which can be downloaded from kingcounty.gov/swdm/2021 Design Manual Drawings.

Planting Requirements

1. The wetland cell shall be planted with emergent wetland plants following the recommendations given in Table 6.4.1.A (p. 6-82) or the recommendations of a wetland specialist. *Note: Cattails (Typha latifolia) are not allowed. They tend to escape to natural wetlands and crowd out other species. In addition, the shoots die back each fall and will result in oxygen depletion in the wetpool unless they are removed.*
2. If the stormwater wetland is in a sensitive lake or sphagnum bog protection area, shrubs that form a dense cover shall be planted on slopes above the WQ design water surface on at least three sides of the presettling cell. For banks that are berms, no planting is allowed if the berm is regulated by dam safety requirements (see Section 5.1.1). The purpose of planting is to discourage waterfowl use of the pond and to provide shading.[38] Some suitable trees and shrubs include vine maple (*Acer circinatum*), wild cherry (*Prunus emarginata*), red osier dogwood (*Cornus stolonifera*), California myrtle (*Myrica californica*), Indian plum (*Oemleria cerasiformis*), and Pacific yew (*Taxus brevifolia*) as well as numerous ornamental species.

Construction and Maintenance Considerations

Construction and maintenance considerations are the same as for basic wetponds. Construction of the naturalistic alternative (Option B) can be easily done by first excavating the entire area to the 1.5-foot average depth. Then soil subsequently excavated to form deeper areas can be deposited to raise other areas until the distribution of depths indicated in the design is achieved.

[38] Waterfowl are believed to limit use of areas where their view of predator approach paths is blocked. Some suitable native shrubs include vine maple, Indian plum, bitter cherry, red osier dogwood, cascara, and red elderberry. Ornamental hedge plants such as English laurel, privet and barberry are also good choices.

FIGURE 6.4.3.A STORMWATER WETLAND — OPTION A

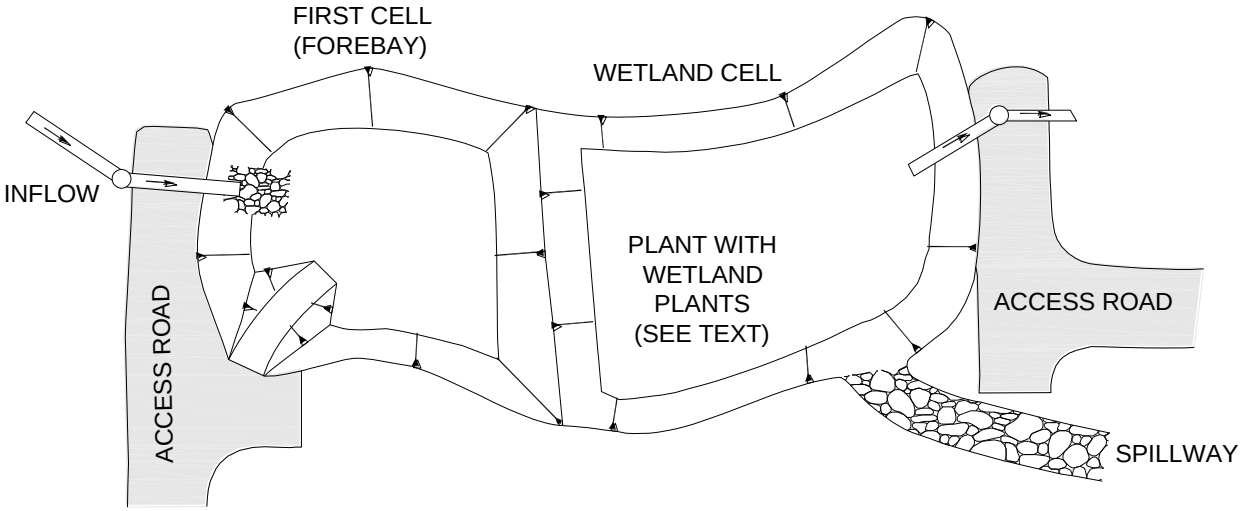

PLAN VIEW Option A
NTS

NOTE:
SEE DETENTION FACILITY REQUIREMENTS FOR LOCATION AND SETBACK REQUIREMENTS.

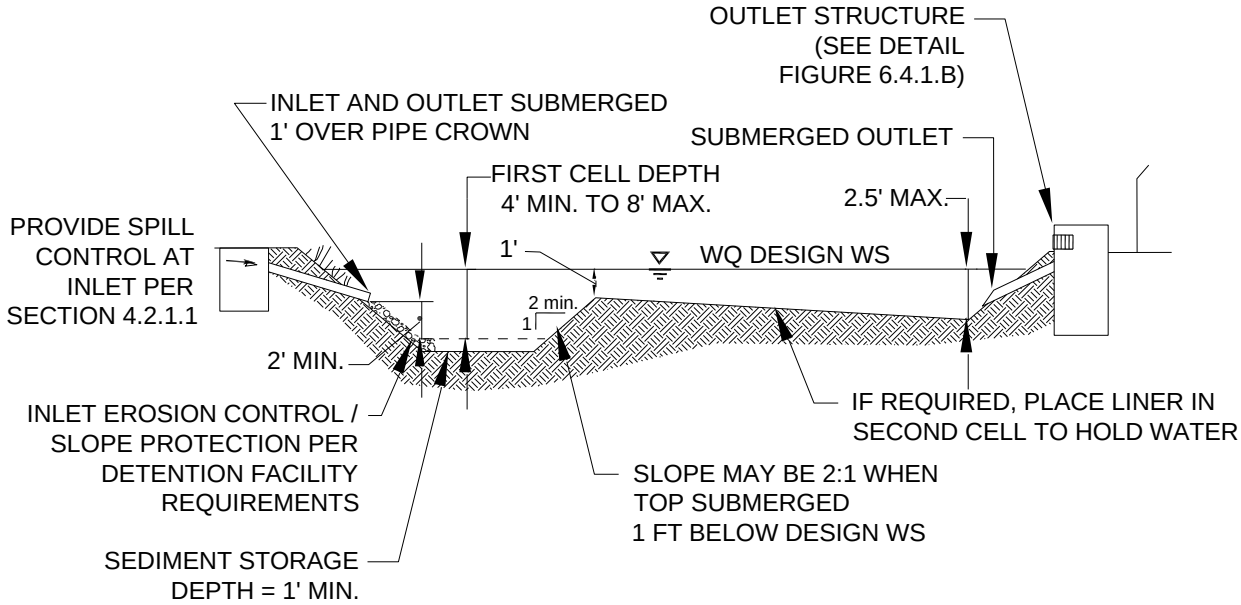

SECTION VIEW Option A
NTS

FIGURE 6.4.3.B STORMWATER WETLAND — OPTION B

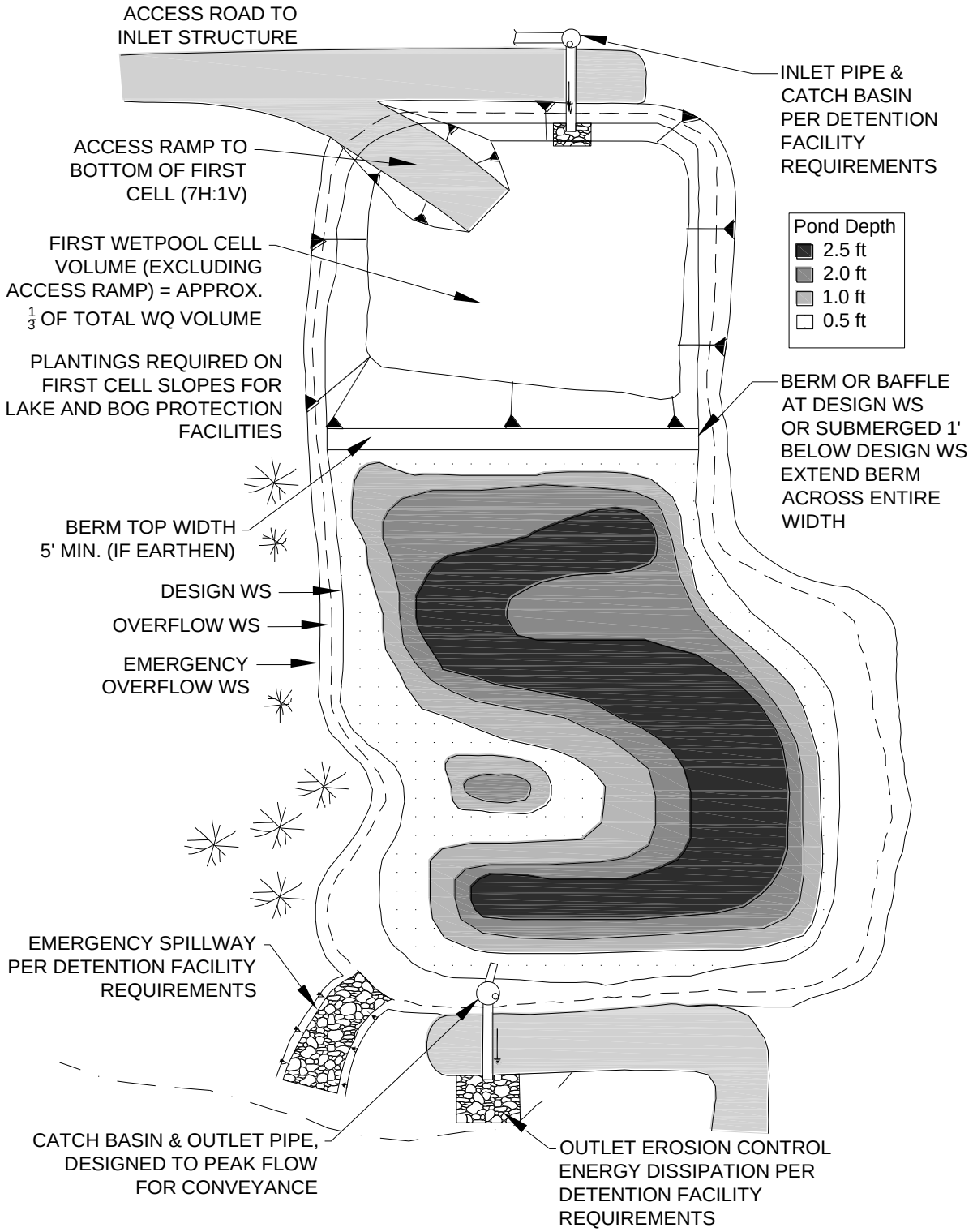

PLAN VIEW Option B
NTS

6.4.4 COMBINED DETENTION AND WETPOOL FACILITIES

Combined detention and WQ wetpool facilities have the appearance of a detention facility but contain a permanent pool of water as well. The following design procedures, requirements, and recommendations cover differences in the design of the stand-alone WQ facility when combined with detention storage. The following combined facilities are addressed:

- Detention/wetpond (basic and large)
- Detention/wetvault
- Detention/stormwater wetland.

There are two sizes of the combined wetpond, a basic and a large, but only a basic size for the combined wetvault and combined stormwater wetland. The facility sizes (basic and large) are related to the pollutant removal goals stated in the WQ menus. See Section 6.1 (p. 6-3) for more information on the WQ menus and treatment goals.

Applications and Limitations

Combined detention and water quality facilities are very efficient for ***sites*** that also have detention requirements. The water quality facility may often be placed beneath the detention facility without increasing the facility surface area. However, the **fluctuating water surface** of the live storage will create unique challenges for plant growth and for aesthetics alike.

The basis for pollutant removal in combined facilities is the same as in the stand-alone WQ facilities. However, in the combined facility, the detention function creates fluctuating water levels and added turbulence. For simplicity, the positive effect of the extra live storage volume and the negative effect of increased turbulence are assumed to balance, and are thus ignored when sizing the wetpool volume.[39] For the combined detention/stormwater wetland, criteria that limit the extent of water level fluctuation are specified to better ensure survival of the wetland plants.

Unlike the wetpool volume, the **live storage component** of the facility should be provided above the seasonal high water table.

Consult the water quality menus in Section 6.1 (p. 6-3) for information on how these combined facilities may be used to meet Core Requirement #8.

6.4.4.1 METHODS OF ANALYSIS

❑ COMBINED DETENTION AND WETPOND (BASIC AND LARGE)

The methods of analysis for combined detention and wetponds are identical to those outlined for wetponds and for detention facilities. Follow the procedure specified in Section 6.4.1.1 (p. 6-72) to determine the wetpool volume for a combined facility. Follow the standard procedure specified in Chapter 5 to size the detention portion of the pond.

❑ COMBINED DETENTION AND WETVAULT

The methods of analysis for combined detention and wetvaults are identical to those outlined for wetvaults and for detention facilities. Follow the procedure specified in Section 6.4.2 (p. 6-86) to determine the wetvault volume for a combined facility. Follow the standard procedure specified in Chapter 5 to size the detention portion of the vault.

[39] Many of the ponds studied in the Nationwide Urban Runoff Program were combined ponds.

❑ COMBINED DETENTION AND STORMWATER WETLAND

The methods of analysis for combined detention and stormwater wetlands are identical to those outlined for stormwater wetlands and for detention facilities. Follow the procedure specified in Section 6.4.3.1 (p.6-92) to determine the stormwater wetland size. Follow the standard procedure specified in Chapter 5 to size the detention portion of the wetland.

6.4.4.2 DESIGN CRITERIA

❑ COMBINED DETENTION AND WETPOND (BASIC AND LARGE)

Typical design details and concepts for a combined detention and wetpond are shown in Figure 6.4.4.A (p. 6-102). The **detention portion** of the facility shall meet the design criteria set forth in Chapter 5 and sizing procedures in Chapter 3.

Detention and Wetpool Geometry

1. The wetpool and sediment storage volumes shall not be included in the required detention volume.
2. The **"Wetpool Geometry"** criteria for wetponds (see page 6-76) shall apply with the following **modification:**

   Criterion 4: The minimum **sediment storage depth** in the first cell is 1 foot. *The 6 inches of* ***sediment storage required for detention ponds*** *does not need to be added to this, but 6 inches of sediment storage must be added to the second cell to comply with the detention sediment storage requirement.*

Berms, Baffles, and Slopes

Same as for wetponds (see page 6-77).

Inlet and Outlet

The "Inlet and Outlet" criteria for **wetponds** (see page 6-77) shall apply with the following **modifications:**

1. **Criterion 2:** A **sump** must be provided in the outlet structure of combined ponds.
2. The detention flow restrictor and its outlet pipe shall be designed according to the requirements for detention ponds (see Section 5.1.4.2).

Access and Setbacks

Same as for wetponds (see page 6-79).

Signage

1. Signage shall be provided according to the requirements for detention ponds (see Section 5.1.1).
2. Signage discouraging feeding of waterfowl and prohibiting swimming and wading is required. Signage is available to download from the King County Water and Land Resources Division *Surface Water Design Manual* website. This sign, or other approved equivalent sign, shall be placed for maximum visibility from adjacent streets, sidewalks, and paths. Specifications for installing the sign are shown in Figure 6.4.1.B (p. 6-85), which can be downloaded from kingcounty.gov/swdm/2021 Design Manual Drawings.

Planting Requirements

Same as for wetponds (see page 6-79).

❑ COMBINED DETENTION AND WETVAULT

The design criteria for detention vaults and wetvaults must **both** be met, except for the following **modifications or clarifications:**

1. The minimum **sediment storage depth** in the first cell shall average 1 foot. The 6 inches of sediment storage required for detention vaults does not need to be added to this, but 6 inches of sediment storage must be added to the second cell to comply with detention vault sediment storage requirements.

2. The **oil retaining baffle** shall extend a minimum of 2 feet below the WQ design water surface.

   Intent: The greater depth of the baffle in relation to the WQ design water surface compensates for the greater water level fluctuations experienced in the combined vault. The greater depth is deemed prudent to better ensure that separated oils remain within the vault, even during storm events.

Note*: If a vault is used for detention as well as water quality control, the facility shall not be modified to function as a baffle oil/water separator as allowed for wetvaults on page 6-90. This is because the added pool fluctuation in the combined vault does not allow for the quiescent conditions needed for oil separation.*

❑ COMBINED DETENTION AND STORMWATER WETLAND

The design criteria for detention ponds and stormwater wetlands must both be met, except for the following **modifications or clarifications:**

1. The **"Wetland Geometry"** criteria for stormwater wetlands (see page 6-93) are modified as follows:

   Criterion 4: The minimum **sediment storage depth** in the first cell is 1 foot. The 6 inches of sediment storage required for detention ponds does not need to be added to this, nor does the 6 inches of sediment storage in the second cell of detention ponds need to be added.

   Intent: Since emergent plants are limited to shallower water depths, the deeper water created before sediments accumulate is considered detrimental to robust emergent growth. Therefore, sediment storage is confined to the first cell which functions as a presettling cell.

2. The "**Inlet and Outlet**" criteria for **wetponds** (see page 6-77) shall apply with the following **modifications:**

   a) **Criterion 2:** A **sump** must be provided in the outlet structure of combined facilities.

   b) The detention **flow restrictor** and its outlet pipe shall be designed according to the requirements for detention ponds (see Section 5.1.4.2).

3. The **"Planting Requirements"** for stormwater wetlands (see page 6-95) are **modified** to use the following plants which are better adapted to water level fluctuations:

   - *Scirpus acutus* (hardstem bulrush) 2 - 6' depth
   - *Scirpus microcarpus* (small-fruited bulrush) 1 - 2.5' depth
   - *Sparganium emersum* (burreed) 1 - 2' depth
   - *Sparganium eurycarpum* (burreed) 1 - 2' depth
   - *Veronica* sp. (marsh speedwell) 0 - 1' depth

   In addition, the shrub *Spirea douglasii* (Douglas spirea) may be used in combined facilities.

Water Level Fluctuation Restrictions: The difference between the WQ design water surface and the maximum water surface associated with the 2-year runoff shall not be greater than 3 feet. If this restriction cannot be met, the size of the stormwater wetland must be increased. The **additional area** may be placed in the first cell, second cell, or both. If placed in the second cell, the additional area need not be planted with wetland vegetation or counted in calculating the average depth.

Intent: This criterion is designed to dampen the most extreme water level fluctuations expected in combined facilities to better ensure that fluctuation-tolerant wetland plants will be able to survive in the facility. It is **not intended** to protect native wetland plant communities and is **not to be applied to natural wetlands**.

FIGURE 6.4.4.A COMBINED DETENTION AND WETPOND

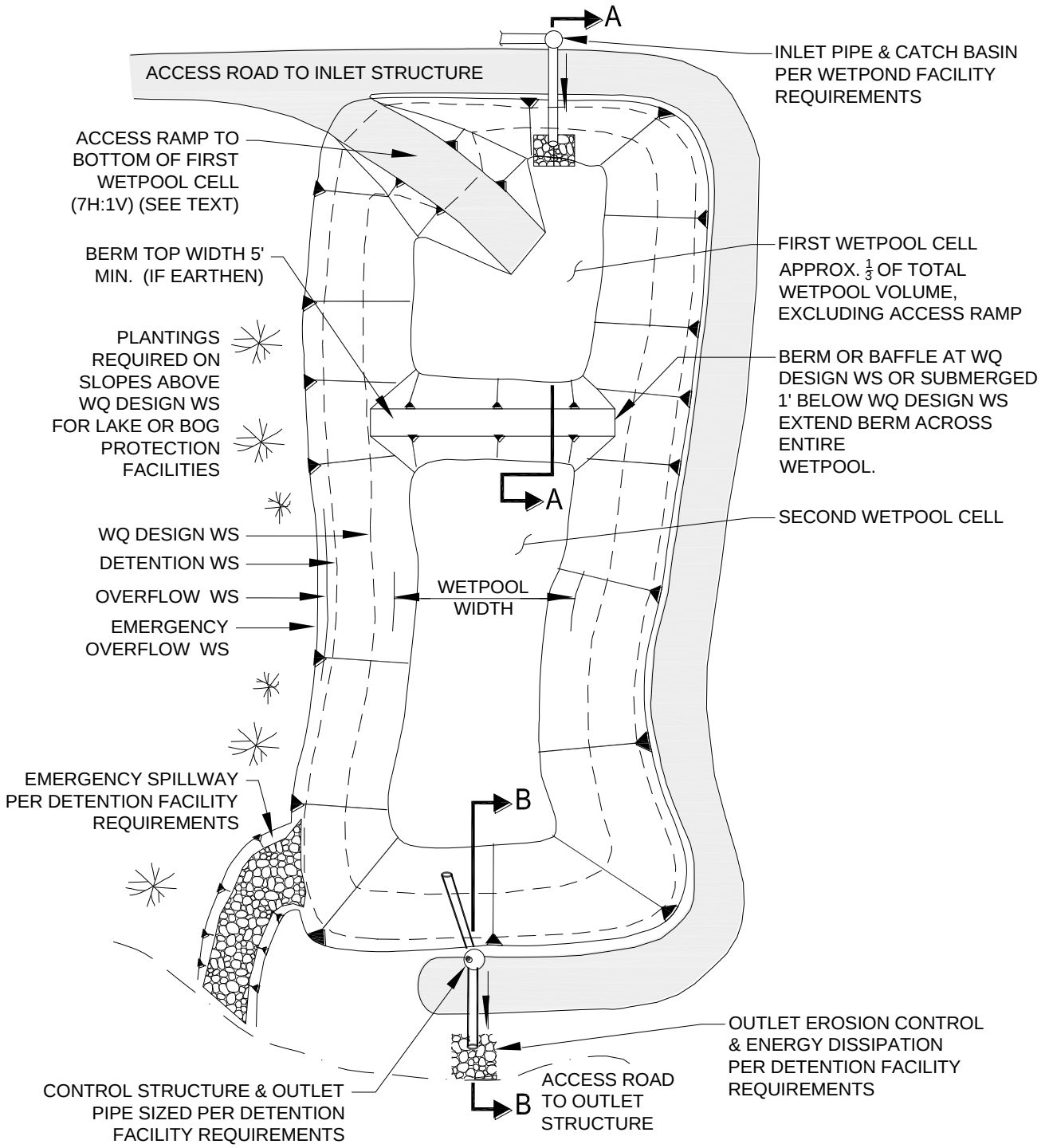

PLAN VIEW
NTS

FIGURE 6.4.4.A COMBINED DETENTION AND WETPOND (*CONTINUED*)

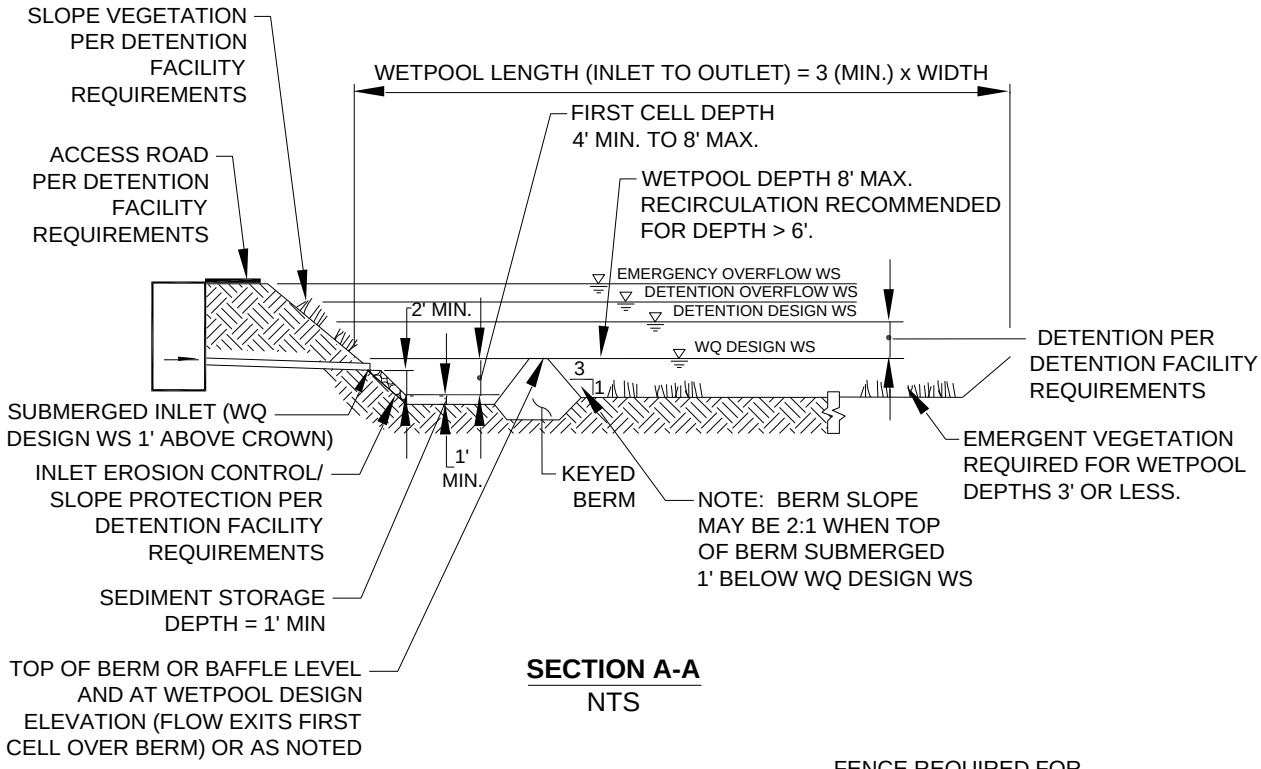

SECTION A-A
NTS

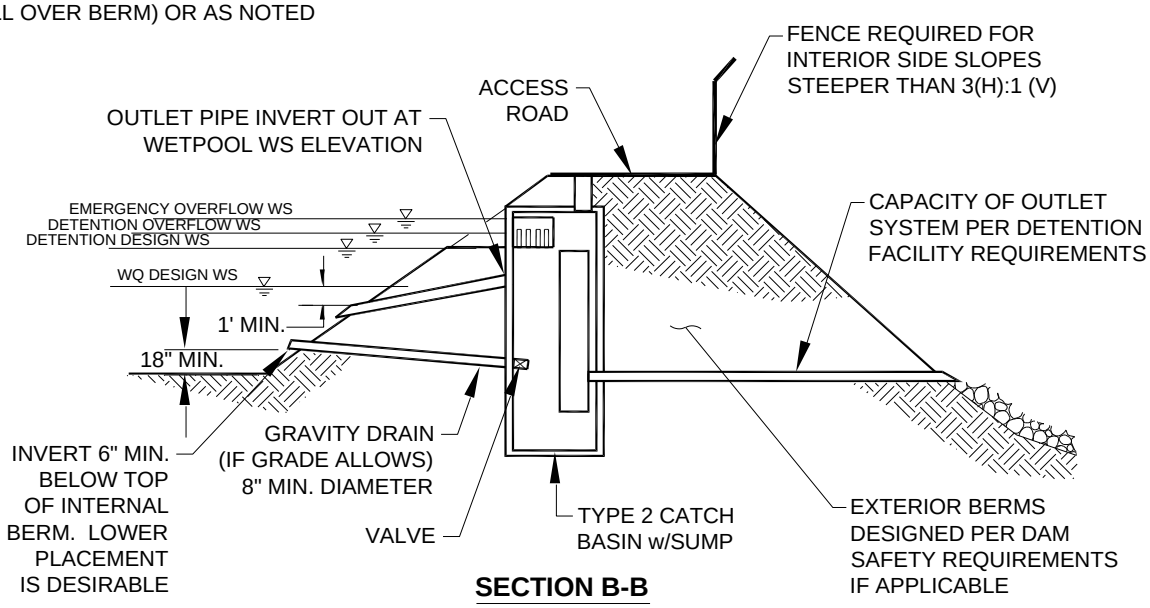

SECTION B-B
NTS

NOTE:
SEE DETENTION FACILITY REQUIREMENTS FOR LOCATION, INTERIOR & EXTERIOR SIDE SLOPES, AND SETBACK REQUIREMENTS.

(This page intentionally left blank)

6.5 FILTRATION FACILITY DESIGNS

This section presents the methods, criteria, and details for analysis and design of sand filters and generic information for proprietary cartridge filters. The following specific facility designs are included in this section:

- "Sand Filters — Basic and Large," Section 6.5.2 (p. 6-106)
- "Sand Filter Vaults," Section 6.5.3 (p. 6-123)
- "Linear Sand Filters," Section 6.5.4 (p. 6-128)

The information presented for each filtration facility is organized into the following categories:

1. **Methods of Analysis:** Contains a step-by-step procedure for designing and sizing each facility.
2. **Design Criteria:** Contains the details, specifications, and material requirements for each facility.

6.5.1 GENERAL REQUIREMENTS FOR FILTRATION FACILITIES

Presettling Requirement

Filtration facilities are particularly susceptible to clogging. Presettling must therefore be provided before stormwater enters a filtration facility to prolong the periods between required maintenance activities. The presettling treatment goal is to remove 50 percent of the total suspended solids (TSS). This requirement may be met by **any of the following:**

1. A water quality facility from the Basic WQ Menu (Section 6.1.1), except for Basic WQ options 7 (sand filter) and 8 (proprietary media/membrane filter) which shall not be used to meet the presettling requirement.
2. A presettling pond or vault, which may be integrated as the first cell of the filtration facility, with a treatment volume equal to 0.25 times the basic water quality treatment volume (see Section 6.2.1) calculated by the approved model or by using the NRCS curve number method (see Section 6.4.1.1, p. 6-72). See design requirements below. *Note: For the linear sand filter, use the sediment cell sizing given in the design instead of the above sizing.*
3. A detention facility sized to meet the Level 2 flow control standard.
4. An alternative King County approved pretreatment technology (see New Facility Designs in Section 6.2, Section 6.7 “Proprietary Facility Designs”, and References 14-A and 14-B).

Other Pretreatment Requirements, Limitations, and Notes

1. Sand filters not preceded by a facility that captures floatables, such as a spill control tee, must provide additional pretreatment to remove **floatable trash and debris** before flows reach the sand bed. This requirement may be met by providing a catch basin with a capped riser on the inlet to the sand filter (see Figure 6.5.2.B, p. 6-121).
2. For ***high-use sites***, sand filters must be preceded by an **oil control option** from the High-Use menu, Section 6.1.5 (p. 6-15).
3. The presettling requirement (with 50% TSS treatment goal) for filtration facilities is in addition to and exclusive of the treatment requirement for the filtration facility (80% TSS treatment goal).

Design Criteria for Presettling Cells

1. If water in the presettling cell or upstream WQ facility will be in direct contact with the soil, the cell or WQ facility must be **lined** per the liner requirements in Section 6.2.4.

Intent: to prevent groundwater contamination from untreated stormwater runoff in areas of excessively drained soils.

2. The presettling cell shall conform to the following:
   a) The **length-to-width ratio** shall be 2:1, at minimum. A 3:1 ratio is recommended. Berms or baffles may be used to lengthen the flowpath.
   b) The **minimum depth** shall be 3 feet; the **maximum depth** shall be 6 feet.
   c) One foot of sediment storage shall be provided.
3. Inlets and outlets shall be designed to minimize velocity and reduce turbulence. The top of the inlet pipe shall be submerged at least 1 foot. The bottom of the inlet pipe shall be at least 1 foot above sediment storage.
4. If the presettling cell is in a sensitive lake or sphagnum bog protection area, shrubs that form a dense cover shall be planted on slopes above the WQ design water surface on at least three sides (see the wetpond planting requirements in Section 6.4.1.2).
5. See Section 6.5.3.2 (p. 6-123) for details of presettling vault structures.

6.5.2 SAND FILTERS — BASIC AND LARGE

A *sand filter* operates much like an infiltration pond (see the sand filter detail in Figure 6.5.2.A, p. 6-119). However, instead of infiltrating into native soils, stormwater filters through a constructed sand bed with an underdrain system. Runoff enters the pond and spreads over the surface of the filter. As flows increase, water backs up in the pond where it is held until it can percolate through the sand. The treatment pathway is vertical (downward through the sand). High flows in excess of the WQ treatment goal simply spill out over the top of the pond. Water that percolates through the sand is collected in an underdrain system of drain rock and pipes which directs the treated runoff to the downstream drainage system.

A sand filter removes pollutants primarily by physical filtration. As stormwater passes through the sand, pollutants are trapped in the small spaces between sand grains or adhere to the sand surface. Over time, silt will build up on the surface and soil organisms (bacteria, fungi, protozoa, nematodes, etc.) will populate the slit layer and sand bed. The silt will enhance pollutant filtration while the organisms may be responsible for some biological treatment and some filtration by formation of a biofilm. Over time, either may decrease the sand filter infiltration rate sufficient to require removal and replacement of some to all of the media. A large sand filter will treat more of the annual flow than will a basic sand filter and will therefore remove more pollutant load on an annual basis. Increasing the sand thickness will not appreciably improve performance.

The following design procedures, requirements, and recommendations cover two sand filter sizes: a basic size and a large size. The **basic sand filter** is designed to meet the Basic WQ menu goal of 80% TSS removal. The **large sand filter** is expected to meet the Enhanced Basic WQ menu goal of > 30% reduction of dissolved copper and > 60% removal of dissolved zinc, and the Sensitive Lake Protection menu goal of 50% total phosphorus removal.

Applications and Limitations

A sand filter may be used in most residential, commercial, and industrial developments where ***site*** topography and drainage provide adequate hydraulic head to operate the filter. *An elevation difference of about 4 feet between the inlet and outlet of the filter is usually needed to install a sand filter.*

Landscaping may be somewhat constrained because the vegetation capable of surviving in sand and not interfering with sand filter operation, maintenance, or longevity is limited. Trees and shrubs which generate a large leaf fall shall be avoided in the immediate vicinity of the filter because leaves and other debris can clog the surface of the filter.

Sand filters are designed to prevent water from backing up into the sand layer (the underdrain system must drain freely). Therefore, a sand filter is more **difficult to install, and may not be suitable, in areas with high water tables** where groundwater could potentially flood the underdrain system. Water standing in the underdrain system will also keep the sand saturated. Under these conditions, oxygen can be depleted, releasing pollutants such as metals and phosphorus that are more mobile under anoxic conditions.

Sand filter discharge must be by gravity, and must not rely on a pump system. If the pump fails, the sand will become saturated, create anoxic conditions, and release pollutants. Pumped inflow is only allowed for privately maintained systems meeting the criteria in Section 4.2.3.

Because the surface of the sand filter will clog from sediment and other debris, this facility **should not be used in areas where heavy sediment loads are expected**. A sand filter should not be used during construction to control sediments unless the sand bed is replaced periodically during construction and after the ***project site*** is stabilized.

Consult the water quality menus in Section 6.1 (p. 6-3) for information on how basic and large sand filters may be used to meet Core Requirement # 8.

6.5.2.1 METHODS OF ANALYSIS

This section presents the methods of analysis for both **basic and large sand filters**.

A sand filter is designed with two parts: (1) a **temporary storage reservoir** to store runoff, and (2) a **sand filter bed** through which the stored runoff must percolate. Usually the storage reservoir is simply placed directly above the filter, and the floor of the reservoir pond is the top of the sand bed. For this case, the storage volume also determines the hydraulic head over the filter surface, which increases the rate of flow through the sand.

The **modeled routing method** described below uses the approved continuous runoff computer model to determine sand filter area and pond size based on individual ***site*** conditions. The method includes parameters for sizing either a basic or a large sand filter.

Background

There are several variables used in sand filter design which are similar and often confused, even by well-trained individuals. Use of these variables is explained below.

The sand filter design is based on Darcy's law:

$$Q = KiA \tag{6-19}$$

where Q = WQ design flow (cfs)
K = hydraulic conductivity (fps)
A = surface area perpendicular to the direction of flow (sf)
i = hydraulic gradient (ft/ft) for a constant head and constant media depth, computed as follows:

$$i = \frac{h + l}{l} \tag{6-20}$$

where h = average depth of water above filter (ft), defined for this design as $d/2$
d = maximum storage depth above filter (ft)
l = thickness of sand media (ft)

Although it is not seen directly, Darcy's law underlies the modeled routing design method. ***V*** is the direct input in the sand filter design. The relationship between V and K is revealed by equating Darcy's law and the equation of continuity, $Q = VA$. *Note: When water is flowing into the ground, V is commonly called the **filtration rate**. It is ordinarily measured in a percolation test.*

Specifically:

$$Q = KiA \quad \text{and} \quad Q = VA$$

So,

$$VA = KiA \quad \text{or} \quad V = Ki \tag{6-21}$$

Note that $V \neq K$—that is, the filtration rate is not the same as the hydraulic conductivity, but they do have the same units (distance per time). K can be equated to V by dividing V by the hydraulic gradient i, which is defined above in Equation (6-20).

The hydraulic conductivity ***K* does not change with head** nor is it dependent on the thickness of the media, only on the characteristics of the media and the fluid. The hydraulic conductivity of 1 inch per hour (2.315×10^{-5} fps) used in this design is based on bench-scale tests of conditioned rather than clean sand. This design hydraulic conductivity represents the average sand bed condition as silt is captured and held in the filter bed.[40]

Unlike the hydraulic conductivity, the filtration rate ***V* changes with head and media thickness**, although the media thickness is constant in the sand filter design.

Modeled Routing Method

The modeled routing method allows the designer to optimize filter geometry and sizing to meet specific ***site*** conditions. The modeled method requires a trial and error solution using the approved model to route the developed inflow runoff time series through various sand filter configurations until the amount of runoff that passes through the filter media and is treated meets or exceeds the treatment objective defined for the facility. Refer to the approved model's computer software reference manual for specific instructions on using the program. The general design process is described below.

Step 1: Determine whether a basic or large sand filter is required. Consult the water quality menus in Section 6.1 (p. 6-3) to determine the size of filter needed. A basic sand filter is sized so that 91% of the runoff volume will pass through the filter. A large sand filter is sized such that a minimum of 95% of the runoff volume passes through the filter. See Section 6.2.1 (p. 6-17) for discussion of the WQ design volume.

Step 2: Prepare the inflow time series. The developed inflow time series is prepared using the approved model as generally described in Chapter 3. Detailed instructions for preparing the time series can be found in the approved model's computer software reference manual. If the sand filter is upstream of detention, the time series is that of the developed ***site***. If the sand filter is downstream of detention, the time series is the outflow time series leaving the detention facility. *Note: Sand filters located downstream from detention facilities are significantly smaller than those treating runoff before it is detained. Likewise, sand filters receiving flows from Level 2 detention facilities are smaller than those below Level 1 facilities.*

Step 3: .Determine whether the sand filter will be on-line or off-line. For most WQ facilities, the designer may choose to design the facility as either on-line (all flow goes through the facility) or off-line (flows above the WQ design flow bypass the facility). An off-line sand filter has a high-flow bypass with an upstream flow splitter designed to bypass flows above the WQ design flow (see Section 6.2.5, p. 6-32, for more information on flow splitter design).

[40] King County has tested various sand mixes conditioned with simulated stormwater to establish realistic design standards. Tests were conducted under falling head conditions in columns containing 18 inches of sand underlain with a 2-inch layer of washed drain gravel containing a section of 2-inch perforated PVC pipe to simulate the underdrain system. Details are given in Koon, John, "Determination of infiltration rate and hydraulic conductivity for various sand filter media." January 1996.

Note that the WQ design flow rate for the flow splitter is the rate required to pass the WQ volume (basic or large). For the basic sand filter, the rate is reported directly by the approved model (i.e., not modified in the manner for bioswales in Section 6.2.1); for the large sand filter, derive the rate from the ratio of the basic and large water quality volumes. The basic sand filter uses the 91% runoff volume as the water quality design volume, corresponding to a 2-year return interval peak flow from the approved continuous model. The large sand filter design flow can be calculated by increasing the 2 year return interval peak flow by the ratio of the 95% runoff volume (water quality design volume for the large sand filter) and the 91% runoff volume (water quality design volume for the basic sand filter). In equation form,

$$\text{Design flow rate for Large Sand Filter} = \frac{(95\%\ \text{Runoff Volume})}{(91\%\ \text{Runoff Volume})} \times \text{2-year return interval peak flow} \qquad (6\text{-}22)$$

Step 4: Define sand filter modeling parameters. Sand filters can be sized in WWHM using the sand filter element, or in MGS Flood using the infiltration pond element with the Sand Filter Data tab. Follow the guidance in the approved model's reference manual and apply the additional guidance below for the parameters required for the analysis:

a) The surface area of the filter computed by the approved model using inputs of the bottom length and width of the infiltration pond (ft).

b) Maximum water depth over filter: depth at which runoff begins to overflow the sand filter

c) Permeable surfaces: bottom only.

d) Riser and orifice information:

- Riser head: same as the maximum water depth.
- Number of orifices: zero. All runoff will either percolate through sand or overflow the riser.
- Top of riser: flat.

e) Vertical infiltration: Assume a ***design filtration rate*** of 1 inch per hour. Though the sand specified below will initially infiltrate at a much higher rate, that rate will slow as the filter accumulates sediment. When the filtration rate falls to 1 inch per hour, removal of sediment is necessary to maintain rates above the rate assumed for sizing purposes.

Step 5: Size the sand filter. Follow the facility sizing guidance in the approved model's reference manual to input the preliminary design configuration of the sand filter.

Step 6: Route the inflow time series through the sand filter and compare volumes. Compare the volume percentage passing through the filter with the percentage required for the treatment volume (91% or 95%). The approved model calculates the routed volume percentage for the comparison.

- If the volume percentage of water passing through the filter exceeds the design treatment volume percentage, decrease the bottom area of the facility. Repeat this step until the desired performance is achieved.
- If the volume percentage of water passing through the filter is less than the design treatment volume percentage, increase the bottom area until the desired performance is achieved.

Step 7: Size the underdrain system. The underdrain system is sized to convey the peak filtered flows to the outlet. For the **basic** sand filter, the **central collector pipe(s)** shall be sized to convey, at a minimum, the 2-year return frequency flow into the facility using the KCBW program's backwater analysis techniques described in Chapter 4.

For **large** sand filter design, the design flows for the underdrain collector pipe(s) **must be increased** from the basic sand filter, which uses the 91% runoff volume as the water quality design volume, corresponding to a 2-year return interval peak flow from the approved continuous model. For the large sand filter, the

underdrain design flow can be calculated by increasing the 2 year return interval peak flow by the ratio of the 95% runoff volume (water quality design volume for the large sand filter) and the 91% runoff volume (water quality design volume for the basic sand filter). In equation form:

$$\text{Design flow rate for Large Sand Filter underdrain} = \frac{(95\%\ \text{Runoff Volume})}{(91\%\ \text{Runoff Volume})} \times \text{2-year return interval peak flow} \qquad (6\text{-}23)$$

To simplify the analysis, all flows for basic and large sand filters may be assumed to enter the collector pipe at the upstream end. Typically, the collector pipe will not be inlet controlled, so a simple square inlet type may be assumed. The full head of the facility may be utilized to convey flows through the pipe.

Feeder pipes may be sized using the design criteria in "Underdrain Systems" (p. 6-112) instead of analyzing the conveyance capacity as described above.

Strip drains must be analyzed for conveyance per manufacturer's specifications.

Intent: The underdrain must be able to remove standing water from beneath the sand. If standing water remains, the sand will remain saturated. This could cause reducing conditions in the sand, allowing some pollutants to become mobile and be released from the filter to downstream receiving waters.

6.5.2.2 DESIGN CRITERIA

General design concepts and a typical layout of a sand filter are shown in Figure 6.5.2.A (p. 6-119) and Figure 6.5.2.B (p. 6-121).

Sand Filter Geometry

1. **Any shape** sand bed may be used, including circular or free-form designs. *Note: The treatment process is governed by **vertical** flow, so short-circuiting is not a concern as it is in wetponds.*
2. **Sand depth** (*l*) shall be 18 inches (1.5 feet) minimum.
3. **Depth of storage** over the filter media (*d*) shall be 6 feet maximum.

Pretreatment, Flow Spreading, and Energy Dissipation

1. See general presettling and pretreatment requirements for filtration facilities in Section 6.5.1 (p. 6-105).
2. A **flow spreader** shall be installed at the inlet along one side of the filter to evenly distribute incoming runoff across the filter and prevent erosion of the filter surface. See Section 6.2.6 (p. 6-36) for details on flow spreaders.
   a) **If the sand filter is curved or an irregular shape**, a flow spreader shall be provided for a minimum of 20 percent of the filter perimeter.
   b) If the **length-to-width ratio** of the filter is 2:1 or greater, a flow spreader must be located on the longer side and for a **minimum length** of 20 percent of the facility perimeter.
   c) In other situations, use good engineering judgment in positioning the spreader.
3. **Erosion protection** shall be provided along the first foot of the sand bed adjacent to the flow spreader. Geotextile meeting the specifications in WSDOT Standard Specifications, 9-33.2(1) Geotextile Properties / Table 1 / Moderate Survivability / Woven, and Table 2, Class A, weighted with sand bags at 15-foot intervals may be used. Quarry spalls may also be used.

Overflow and Bypass Structures

1. **On-line filters**[41] shall be equipped with **overflows** (primary, secondary, and emergency) in accordance with the design criteria for detention ponds (see Section 5.1.1.1, criteria for "Overflow" and "Emergency Overflow Spillway"). *Note: The primary overflow may be incorporated into the emergency spillway in cases where the spillway discharges into a downstream detention facility, or where overflows can be safely controlled and redirected into the downstream conveyance system.*

2. For **off-line filters**, the outlet structure for the **basic** sand filter must be designed to pass the 2-yr peak inflow rate, as determined using the approved model with 15-minute time steps calibrated to specific ***site*** conditions.

   For **large** sand filter design, the design flows for the overflow **must be increased** from the basic sand filter, which uses the 91% runoff volume as the water quality design volume, corresponding to a 2-year return interval peak flow from the approved continuous model. For the large sand filter, the overflow design flow can be calculated by increasing the 2 year return interval peak flow by the ratio of the 95% runoff volume (water quality design volume for the large sand filter) and the 91% runoff volume (water quality design volume for the basic sand filter). In equation form:

$$\text{Design flow rate for Large Sand Filter overflow} = \frac{(95\%\ \text{Runoff Volume})}{(91\%\ \text{Runoff Volume})} \times \text{2-year return interval peak flow} \qquad (6\text{-}24)$$

   Intent: Overflow capacity is required for low-flow, high-volume storms which may exceed the storage capacity of the filter.

3. To the extent base flow conditions can be identified, **base flow** must be bypassed around the filter to keep the sand from remaining saturated for extended periods of time.

Filter Composition

A sand filter consists of three or four layers:

- Top layer (optional): grass seed or sod grown in sand
- Second layer: sand
- Third layer: geotextile fabric
- Fourth layer: underdrain system.

Sand Specifications

The sand in a filter shall consist of a medium sand with few fines meeting the size gradation (by weight) given in Table 6.5.2.AB (p. 6-112). The contractor must obtain a grain size analysis from the supplier to certify that the No. 100 and No. 200 sieve requirements are met. *Note: Many sand mixes supplied locally meet this specification. However, standard backfill for sand drains (as specified in the Washington Standard Specifications 9-03.13) does not meet this specification and shall not be used for sand filters.*

[41] Whether a WQ facility is designed as on-line (all flow going through the facility) or off-line (high flows bypassing the facility) is a choice made by the designer. Section 6.2.5 (p. 6-29) contains information on flow splitters for WQ facilities.

TABLE 6.5.2.AB SAND MEDIA SPECIFICATIONS	
U.S. Sieve Size	**Percent passing**
U.S. No. 4	95 to 100 percent
U.S. No. 8	70 to 100 percent
U.S. No. 16	40 to 90 percent
U.S. No. 30	25 to 75 percent
U.S. No. 50	2 to 25 percent
U.S. No. 100	Less than 4 percent
U.S. No. 200	Less than 2 percent

Geotextile Materials

Geotextile material requirements are specified in WSDOT Standard Specifications, 9-33.2(1) Geotextile Properties / Table 1 / Moderate Survivability / Woven, and Table 2, Class A.

Underdrain Systems

1. Several **underdrain systems** are acceptable:
   - A central collector pipe with lateral feeder pipes in an 8-inch drain rock bed
   - A central collector pipe with a geotextile drain strip in an 8-inch drain rock bed
   - Longitudinal pipes in an 8-inch drain rock bed, with a collector pipe at the outlet end.

   In smaller installations a single perforated pipe in 8 inches of drain rock may be adequate.
2. The **maximum perpendicular distance** between any two feeder pipes, or the edge of the filter and a feeder pipe, shall be 15 feet.

   Intent: This spacing is required to prevent the underdrain system from backing up into the sand filter during the early life of the filter when high filtration rates exist.
3. All pipe shall be placed with a **minimum slope** of 0.5 %.
4. The **invert of the underdrain outlet** shall be above the seasonal high groundwater level. The *seasonal high groundwater level* is the highest elevation of groundwater observed.

   Intent: The underdrain must be able to remove standing water from beneath the sand. If standing water remains, the sand will remain saturated. This could cause depletion of dissolved oxygen and reducing conditions in the sand, allowing some pollutants to become mobile and be released from the filter to downstream receiving waters.
5. **Cleanout** wyes with caps or junction boxes shall be provided at both ends of all collector pipes. Cleanouts shall extend to the surface of the filter.

   a. A valve box must be provided for access to the cleanouts.

   b. The cleanout assembly must be water tight to prevent short circuiting of the filter.

   Intent: Caps are required on cleanout wyes to prevent short-circuiting of water into the underdrain system when the pond fills with water.
6. If a **drain strip** is used for lateral drainage, the strip must be placed at the slope specified by the manufacturer but at least at 0.5%. All drain strip must extend to the central collector pipe. Drain strips installations must be analyzed for conveyance because manufactured products vary in the amount of flow they are designed to handle.

7. At least 8 inches of drain rock must be maintained over all underdrain piping or drain strip, and 6 inches must be maintained on either side to prevent damage by heavy equipment during maintenance.

   *Note: If drain strip is used, it may be easier to install the central collector pipe in an 8-inch **trench** filled with drain rock, making the cover over the drain strip and the collector pipe the same thickness. In this case the pipe shall be wrapped with geotextile to prevent clogging. Use the same geotextile specification as given in WSDOT Standard Specifications, 9-33.2(1) Geotextile Properties / Table 1 / Moderate Survivability / Woven, and Table 2, Class A,.*

8. A **geotextile fabric** shall be used between the sand layer and the drain rock and be placed so that one inch of drain rock is above the fabric.

   Intent: The position of the geotextile fabric provides a **transition layer** of mixed sand and drain rock. A distinct layer of finely textured sand above a coarser one may cause water to pool at the interface and not readily drain downward due to the greater capillary forces in the finer material.

9. Sand filters shall not be used in combination with a downstream pump system.

Intent: Sand filters are designed to prevent water from backing up into the sand layer; the underdrain system must drain freely. If the pump fails, the sand will become saturated, create anoxic conditions, and release pollutants.

Underdrain Materials

1. Underdrain **pipe** shall be minimum 6 inch diameter perforated PVC, SDR 35. One acceptable specification for perforations is as follows: 2 rows of holes ($^1/_2$-inch diameter) spaced 6 inches apart longitudinally (max), with rows 120 degrees apart (laid with holes downward). Other drain pipe may be used if it adequately drains the filter.

2. **Drain rock** shall be $1^1/_2$ to $^3/_4$ -inch rock, washed and free from clay or organic material.

3. If a geotextile drain strip system is used, the attached **geotextile fabric** should not be used, or the fabric side should be positioned away from the sand blanket. Geotextile is already required between the sand and drain rock layers, and must meet the specifications in WSDOT Standard Specifications, 9-33.2(1) Geotextile Properties / Table 1 / Moderate Survivability / Woven, and Table 2, Class A, to avoid clogging the filter prematurely.

Access Roads & Setbacks

1. An access road shall be provided to the inlet and outlet of a sand filter for inspection and maintenance purposes. Requirements for access roads are the same as for detention ponds (see Section 5.1.1.1, "Design of Access Roads" and "Construction of Access Roads").

2. The location of the facility relative to ***site*** constraints (e.g., buildings, property lines, etc.) shall be the same as for detention ponds (see Section 5.1.1) except as noted in 3, below. See Section 6.2.3 (p. 6-23) for typical setback requirements for WQ facilities.

3. For a sand filter that infiltrates to ground, setbacks shall be same as those for infiltration ponds, (see Section 5.2.2).

Grass Cover

1. **No top soil** shall be added to sand filter beds because fine-grained materials (e.g., silt and clay) reduce the hydraulic capacity of the filter.

3. **Growing grass** will require selecting species that can tolerate the demanding environment of the sand bed. Sand filters experience long periods of saturation during the winter wet season, followed by extended dry periods during the summer. Modeling predicts that sand filters will be dry about 60 percent of the time in a typical year. Consequently, vegetation must be capable of surviving drought as well as wetness.

- The grasses and plants listed in Table 6.5.2.B (p. 6-115) are good choices for pond sides. They are facultative (i.e., they can tolerate fluctuations in soil water). These species can generally survive approximately 1 month of submersion while dormant in the winter (until about February 15), but they can withstand only about 1 to 2 weeks of submersion after mid-February.
- The lower portion of Table 6.5.2.B lists grass species that are good choices for the sand filter bottom. They can withstand summer drying and are fairly tolerant of infertile soils. In general, planting a mixture of 3 or more species is recommended. This ensures better coverage since tolerance of the different species is somewhat different, and the best adapted grasses will spread more rapidly than the others. Legumes, such as clover, fix nitrogen and hence can thrive in low-fertility soils such as sands. This makes them particularly good choices for planting the sand filter bed.

4. To prevent any use that could compact and potentially damage the filter surface, both **permanent and temporary structures** (e.g., playground equipment or bleachers) are not permitted.
5. If the sand filter is located in a Sensitive Lake Protection Area, or discharges to a stream that is listed as a Dissolved Oxygen (DO) Problem (Type 2) under "Downstream Water Quality Problems Requiring Special Attention" (Section 1.2.2.1.2) and the problem cause has been identified as nutrient loading, then low phosphorus fertilizers (such as formulations in the proportion 3:1:3 N-P-K or less) or slow-release phosphorus formulations should be used, and at no more than the minimum agronomic rate. Regardless of location, the fertilizer must meet the requirements of Chapter 15.54.500 RCW limiting the use of fertilizer containing phosphorus.

TABLE 6.5.2.B RECOMMENDED PLANTS FOR SATURATED AREAS	
RECOMMENDED PLANTS FOR POND SIDES	
Scientific Name	**Common Name**
Agrostis alba	Redtop
Agrostis palustris	Creeping bentgrass
Alopecurus pratensis	Meadow foxtail
Calamagrostis nutkaensis	Pacific reed grass
Glyceria borealis	Northern mannagrass
Holcus lanatus	Common velvet grass
Poa palustris	Fowl bluegrass
Poa pratensis	Kentucky bluegrass
Juncus acuminatus	Tapertip rush
Juncus effusus	Soft rush
RECOMMENDED PLANTS FOR POND BOTTOM (SAND SURFACE)	
Agrostis tenuis	Colonial bentgrass (Highland strain good)
Buchloe dactyloides	Buffalo grass
Festuca elatior	Tall fescue
Festuca elatior "Many Mustang," "Silverado"	Dwarf tall fescues
Festuca rubra	Red fescue
Lolium perenne	Perennial ryegrass
Zoysia tenuifolia	Korean grass
Trifolium repens	White lawn clover
Note: Other grasses may be used if recommended by a horticultural or erosion control specialist for the specific site.	

Recommended Design Features

The following design features should be incorporated into sand filter designs where ***site*** conditions allow:

1. A **horticultural specialist** should be consulted for advice on planting.
2. **Seed** should be applied in spring or mid to late fall unless irrigation is provided. If the filter is seeded during the dry summer months, surface irrigation is needed to ensure that the seeds germinate and survive. Seed should be applied at 80 lbs/acre.
3. During seeding, Slow-release **fertilizers** may be applied to speed the growth of grass. If the sand filter is located in a sensitive lake watershed or discharges to a stream that is listed as a Dissolved Oxygen (DO) Problem (Type 2) under "Downstream Water Quality Problems Requiring Special Attention" (Section 1.2.2.1.2) and the problem cause has been identified as nutrient loading, then low phosphorus fertilizers (such as formulations in the proportion 3:1:3 N-P-K or less) or slow-release phosphorus formulations should be used, and at no more than the minimum agronomic rate.

Regardless of location, the fertilizer must meet the requirements of Chapter 15.54.500 RCW limiting the use of fertilizer containing phosphorus.

4. A sand filter can add landscape interest and may be incorporated into the project **landscape design**,**.** Interior side slopes may be stepped with flat areas for planting,. Perennial beds may be planted above the overflow water surface elevation. However, large shrubs and trees are not allowed because falling leaves and needles can clog the filter surface, requiring more frequent maintenance, and roots may damage the structure and/or function of the filter. *Note: Examples of areas with stepped side slopes can be found at the Ballard Locks in Seattle and at Luther Burbank Park on Mercer Island.*

5. Recreational use of the filter surface is not allowed as activity can disrupt the structure and function of the filter media. Signage discouraging recreation is required. Signage shall be placed for maximum visibility from adjacent streets, sidewalks, and paths. More than one sign may be required to be sure the advisory will be noted by anyone approaching the facility.

Construction Considerations

1. If sand filters are put into service before construction of all parcels within the catchment is complete and all disturbed soil in the sand filter catchment has been stabilized, the filter will very likely clog prematurely. If individual lots are not stabilized, the options for **protection from upstream erosion** given in Section 5.2.1 for infiltration ponds may be used.

   An **alternative** is to install the sand filter pond including full excavation for the filter sand and underdrain layers, delaying placement of the sand and underdrains until the ***project site*** is stabilized. The partially complete sand filter will then function like a small wetpond. Later, the accumulated sediment must be removed and the underdrain with gravel, geotextile separator, and sand layers placed. A second alternative is to place only the gravel underdrain during the construction phase. Then clean the gravel and place the geotextile separator and sand layer after the ***project site*** is stabilized.

   The County will not assume maintenance responsibility or release financial guarantees unless the sand filter is installed per design and functioning properly. If the final sand layer cannot be completed before the typical two-year holding period for financial guarantees, the applicant may elect to pay the County to clean and install the sand when the watershed is stabilized, or may arrange a smaller financial guarantee specifically for completion of the sand filter.

2. **Careful placement of the sand** is necessary to avoid formation of voids within the sand that could lead to short-circuiting, particularly around penetrations for underdrain cleanouts, as well as to prevent damage to the underlying geomembranes and underdrain system. Voids between the trench wall and geotextile fabric should also be avoided.

3. **Over compaction must be avoided** to ensure adequate filtration capacity. Sand is best placed with a low ground pressure tracked bulldozer (4.6 pounds per square inch or less ground pressure). The number of passes over sand fill should be minimized during placement; using low ground-pressure vehicles can minimize ground pressure and compaction.

4. After the sand layer is placed, water settling is recommended. Flood the sand with 10 to 15 gallons of water per cubic foot of sand.

Maintenance Considerations

Sand filters are subject to clogging by fine sediment, oil and grease, and other debris (e.g., trash and organic matter such as leaves). Filters and pretreatment facilities should be inspected every 6 months during the first year of operation. Inspections should also occur immediately following a storm event to assess the filtration capacity of the filter. Once the filter is performing as designed, the frequency of inspection may be reduced to once per year.

During an inspection the following features should be evaluated and maintained as needed:

1. Remove debris and sediment from the pretreatment facility when depth exceeds 12 inches.

2. Remove debris and sediment from the surface of the filter when accumulations exceed 0.5 inches.
3. Observe operation of the overflow and drawdown time in the filter. Frequent overflow through the grated "birdcage" or "jailhouse" window into the outlet structure or slow drawdown are indicators of plugging problems. Under normal operating conditions, a sand filter should completely empty within 9 to 24 hours following a storm event (i.e., after the inflow of runoff to the filter ceases), depending on pond depth. Generally, if the water level over the filter drops at a rate less than $^1/_2$-inch per hour ($V <$ $^1/_2$-inch per hour), corrective maintenance is needed. Recommendations for improving sand filter performance are summarized below:
   a) Remove thatch accumulation in grass.
   b) Aerate the filter surface to improve permeability.
   c) Till the filter surface. Two separate passes following a criss-cross pattern (i.e., second pass at right angles to the first) are recommended.
   d) Replace upper 4 to 6 inches of grass and sand.
4. Experience with sand filters used for stormwater treatment in Austin, Texas, has shown that the sand becomes clogged and must be replaced every 4 to 10 years.
5. Rapid drawdown in the filter (i.e., greater than 12 inches per hour) indicates short-circuiting of the filter media. Inspect the cleanouts on the underdrain pipes and along the base of the embankment for leakage.
6. Formation of rills and gullies on the surface of the filter indicates improper function of the inlet flow spreader or poor sand compaction. Check for accumulation of debris on or in the flow spreader, and refill rills and gullies with sand.

Other maintenance practices that should be employed to ensure proper operation of the sand filter are summarized below:

1. Avoid use of fertilizers along the bottom or sides of a landscape sand filter. Any fertilizer used must meet the requirements of Chapter 15.54.500 RCW limiting the use of fertilizer containing phosphorus[42].
2. Avoid driving heavy machinery or equipment on the sand filter to minimize compaction of the filter media, prevent the formation of ruts in the surface of the filter that could concentrate or channelize flow, and prevent damage to the underdrain system. Use only low ground pressure tracked equipment (4.6 pounds per square inch or less ground pressure). The number of passes over sand fill should be minimized to the greatest extent possible.
3. Mow grass as needed, and remove the cut grass from the sand filter.
4. If vegetation is present, water it periodically when needed, especially during the summer dry season.
5. Discourage use of the sand bed by pets by installing signs reminding residents of scoop laws, providing scoop stations near the facilities, planting barriers such as barberry, and/or providing other measures as appropriate.

[42] http://apps.leg.wa.gov/billinfo/summary.aspx?bill=1489&year=2011

❑ MODIFICATIONS FOR COMBINING WITH AN INFILTRATION POND

Where an infiltration pond is proposed for flow control, a sand filter (basic or large) may be combined with the infiltration pond by making the following modifications in design criteria:

1. The **"100-year Overflow Conveyance"** requirements for infiltration ponds (see Section 5.2.1) shall apply in place of the **"Overflow and Bypass"** requirements for sand filters.
2. The **"Filter Composition"** criteria are changed to eliminate the requirement for an underdrain system. The fourth layer of the filter becomes the native infiltrative soils.
3. The **"Underdrain System"** and **"Underdrain Materials"** criteria for sand filters are not applied. Water infiltrating through the sand layer need not be collected but may simply continue infiltrating downward into native soils.
4. The sides of the infiltration pond must be provided with a **treatment liner** up to the WQ design water surface elevation, at a minimum. In a groundwater protection area, the liner must extend up to the overflow water surface elevation of the pond. See Section 6.2.4 (Facility Liners) for information on liners.

FIGURE 6.5.2.A SAND FILTER WITH LEVEL SPREADER

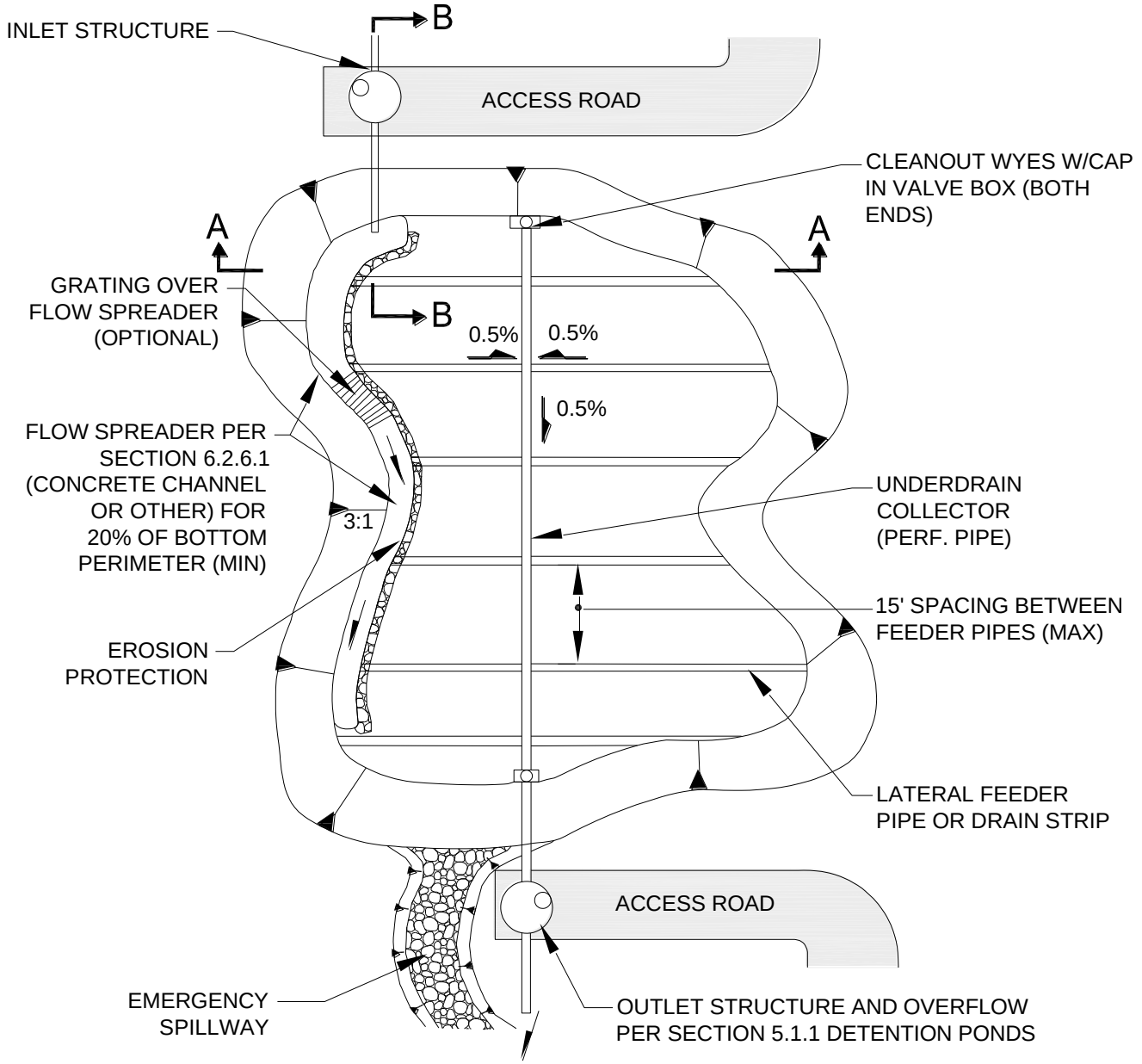

PLAN VIEW
NTS

FIGURE 6.5.2.A SAND FILTER WITH LEVEL SPREADER (*CONTINUED*)

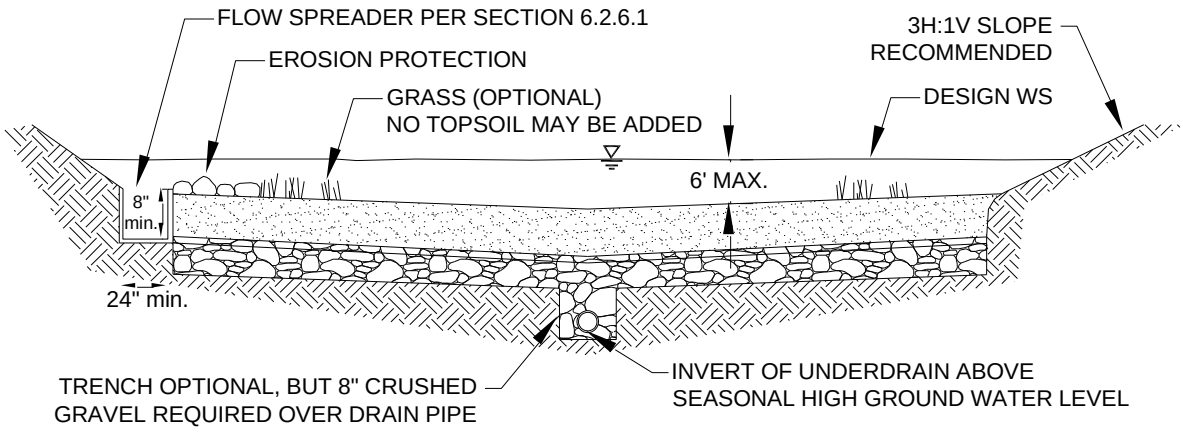

SECTION A-A
NTS

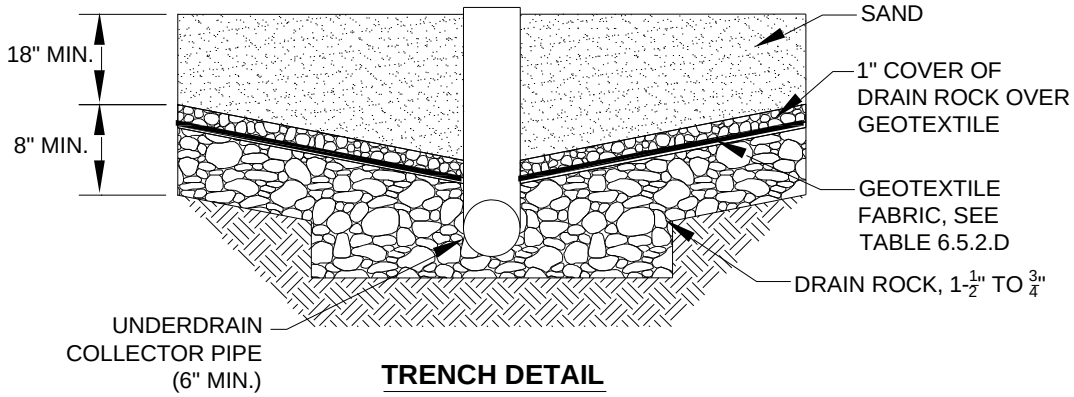

TRENCH DETAIL
NTS

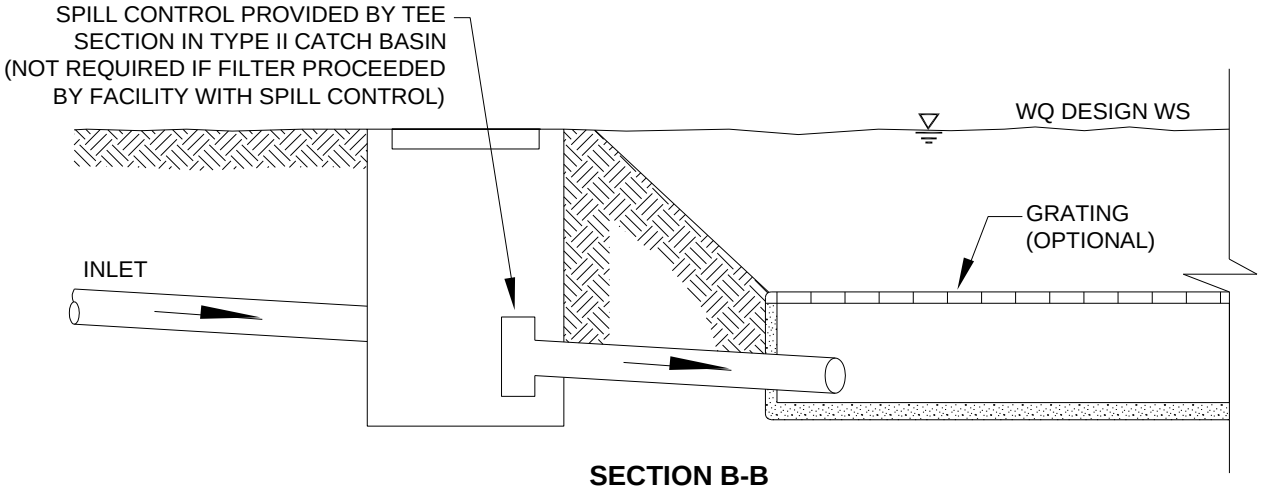

SECTION B-B
NTS

FIGURE 6.5.2.B SAND FILTER WITH PRETREATMENT CELL

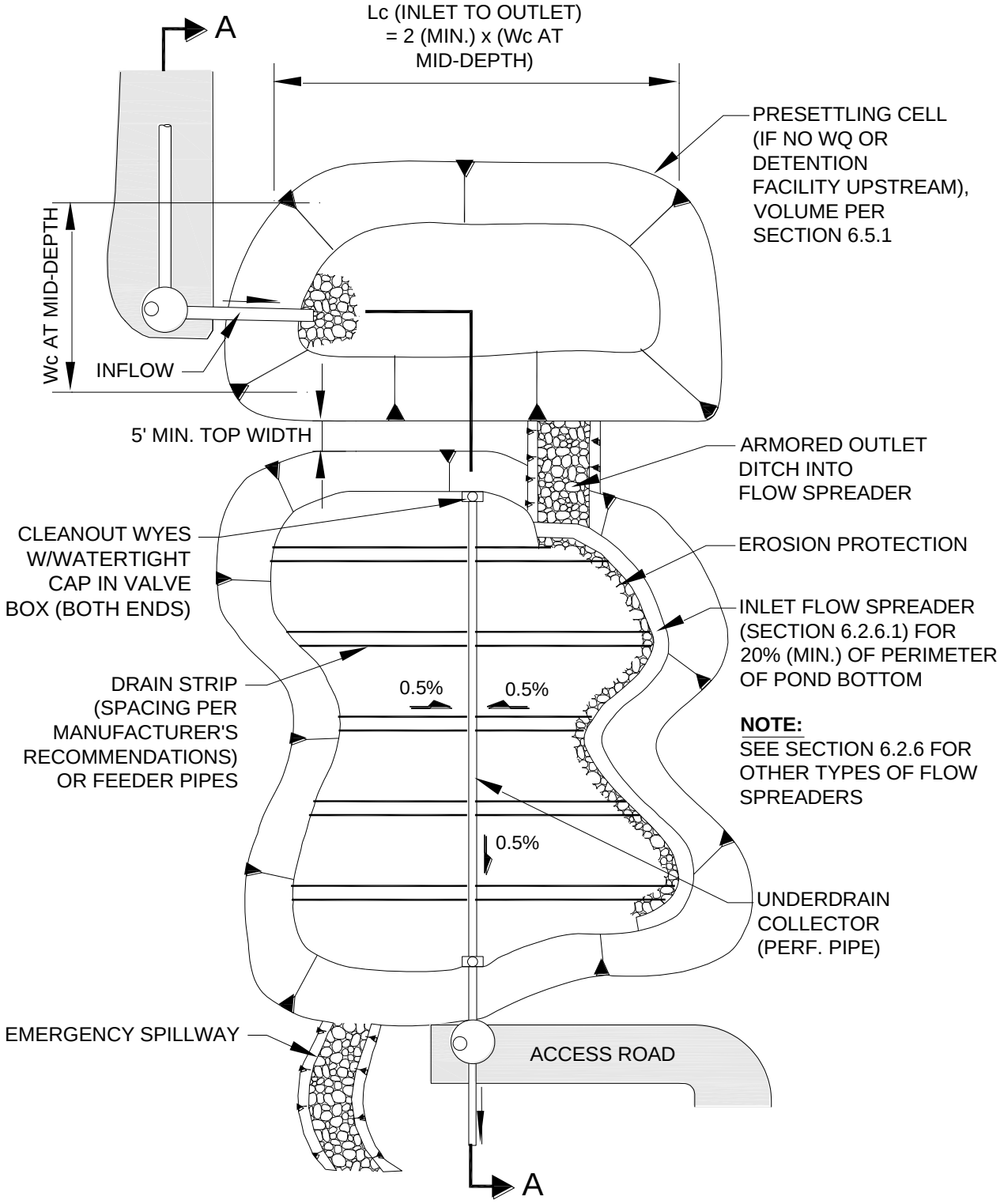

PLAN VIEW
NTS

FIGURE 6.5.2.B SAND FILTER WITH PRETREATMENT CELL (*CONTINUED*)

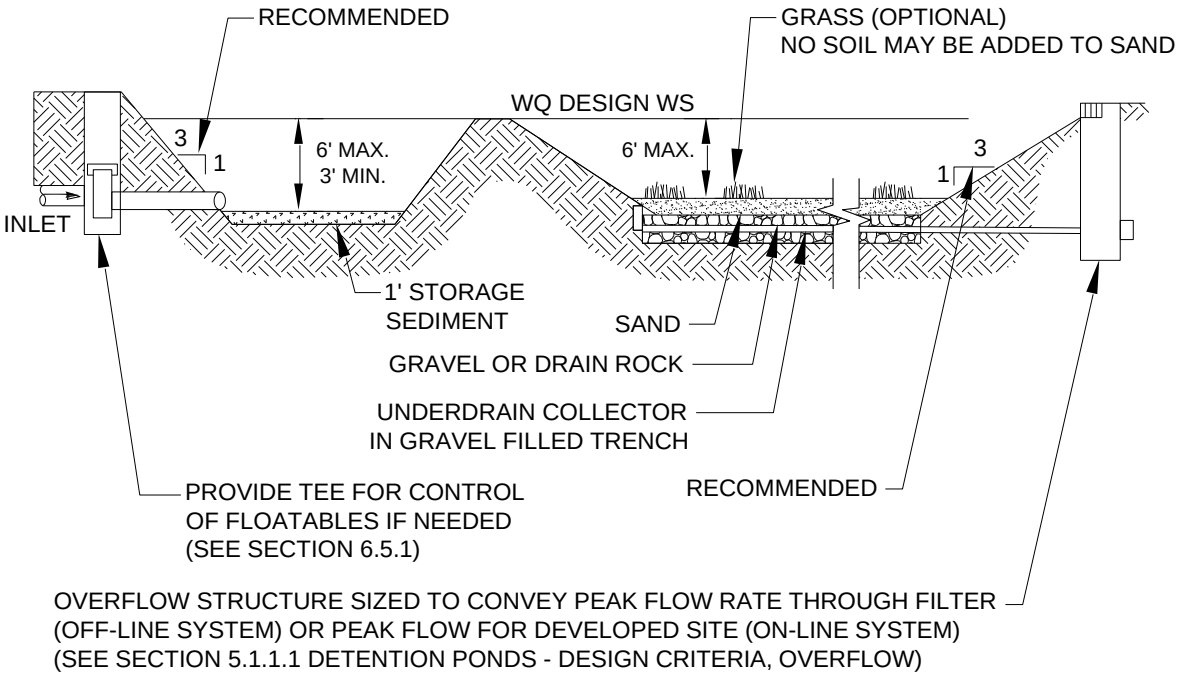

SECTION A-A
NTS

FIGURE 6.5.2.C SCHEMATIC OF STEPPED SIDE SLOPES

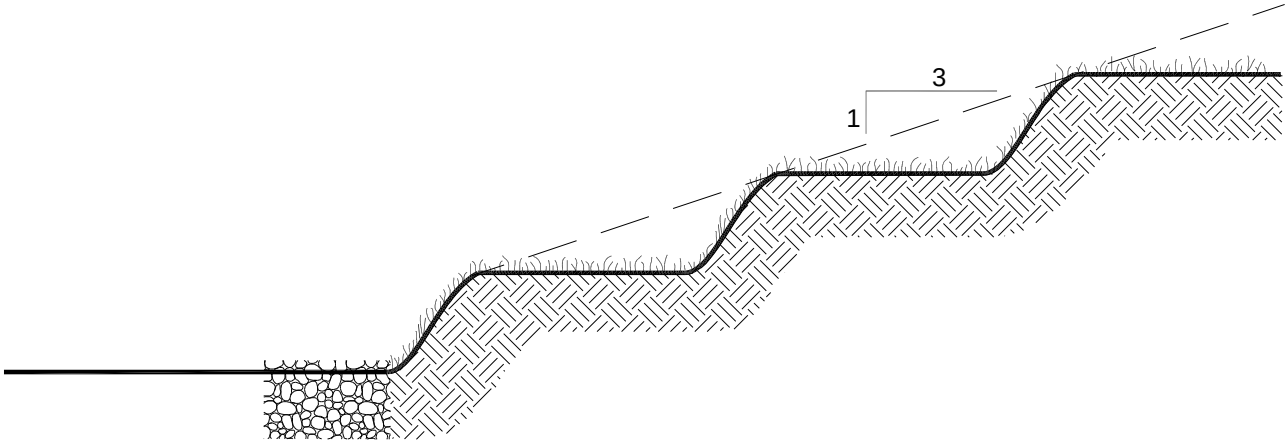

SECTION
NTS

6.5.3 SAND FILTER VAULTS

A *sand filter vault* is similar to an open sand filter except that the sand layer and underdrains are installed below grade in a vault. Like a sand filter, a sand filter vault may be sized as either a basic or a large facility to meet different water quality objectives. The **basic sand filter vault** is designed to meet the Basic WQ menu goal of 80% TSS removal for the water quality design flow. The **large sand filter vault** is expected to meet the Sensitive Lake Protection menu goal of 50% total phosphorus removal.

Applications and Limitations

A sand filter vault may be used on ***sites*** where **space limitations preclude the installation of above ground facilities**. In highly urbanized areas, particularly on redevelopment and infill projects, a vault is a viable alternative to other treatment technologies that require more area to construct.

Like sand filters, sand filter vaults are **not suitable for areas with high water tables** where infiltration of groundwater into the vault and underdrain system will interfere with the hydraulic operation of the filter. Soil conditions in the vicinity of the vault installation should also be evaluated to identify special design or construction requirements for the vault.

It is desirable to have an **elevation difference of 4 feet between the inlet and outlet** of the filter for efficient operation. Therefore, ***site*** topography and drainage system hydraulics must be evaluated to determine whether use of an underground filter is feasible.

Because the surface of a sand filter vault is prone to clogging from sediment and other debris, this facility **should not be used in areas where heavy sediment loads are expected**.

Refer to the WQ menus, Section 6.1 (p. 6-3), for information on how sand filter vaults may be used to meet Core Requirement #8.

6.5.3.1 METHODS OF ANALYSIS

The **methods of analysis** for basic and large sand filter vaults are identical to the methods described for basic and large sand filters. Follow the procedures described in Section 6.5.2.1 (p. 6-107).

6.5.3.2 DESIGN CRITERIA

General **design concepts** for sand filter vaults are shown in Figure 6.5.3.A (p. 6-126).

Sand Filter Geometry

Same as for sand filters (see page 6-110).

Pretreatment, Flow-Spreading, and Energy Dissipation

1. See general presettling and pretreatment requirements for filtration facilities, Section 6.5.1, p. 6-105.
2. A **flow spreader** shall be installed at the inlet to the filter bed to evenly distribute incoming runoff across the filter and prevent erosion of the filter surface.
3. For **vaults with presettling cells**, the presettling cells shall be constructed so that the **divider wall** extends from the floor of the vault to the WQ design water surface and is water tight
4. The flow spreader shall be positioned so that the **top of the spreader** is no more than 8 inches above the top of the sand bed (and at least 2 inches higher than the top of the inlet pipe if a pipe and manifold distribution system is used). See Section 6.2.6 (p. 6-36) for details on flow spreaders. For **vaults with presettling cells**, a **concrete sump-type flow spreader** (see Figure 6.2.6.B, p. 6-39) shall be built into or affixed to the divider wall. The sump shall be a minimum of 1 foot wide and extend the width of

the sand filter. The downstream lip of the sump shall be no more than 8 inches above the top of the sand bed.

5. Flows shall enter the sand bed by **spilling over the top of the wall into a flow spreader pad**, or alternatively a **pipe and manifold system** may be designed and approved at the discretion of DLS-Permitting to deliver water through the wall to the flow spreader. *Note: Water in the first or presettling cell is dead storage. Any pipe and manifold system designed must retain the required dead storage volume in the first cell, minimize turbulence, and be readily maintainable.*
6. If a pipe and manifold system is used, the **minimum pipe size** shall be 8 inches. Multiple inlets are recommended to minimize turbulence and reduce local flow velocities.
7. **Erosion protection** shall be provided along the first foot of the sand bed adjacent to the spreader. Geotextile weighted at the corners with sand bags, quarry spalls, or other suitable erosion control may be used.

Overflow and Bypass Structures

Same as for sand filters (see page 6-111).

Filter Composition

The filter bed shall consist of three layers as follows:

- Top layer: sand
- Second layer: geotextile fabric
- Third layer: underdrain system.

Sand Specifications and Geotextile Materials

Same as for sand filters (see page 6-111).

Underdrain Systems and Underdrain Materials

Same as for sand filters (see page 6-112).

Vault Structure

1. Sand filter vaults are typically designed as on-line (flow-through) systems with a flat bottom under the filter bed.
2. If a presettling cell is provided, the **cell bottom** may be longitudinally level or inclined toward the inlet. To facilitate sediment removal, the bottom shall also slope from each side towards the center at a minimum of 5%, forming a broad "v." *Note: More than one "v" may be used to minimize cell depth.*

   Exception: The bottom of the presettling cell may be flat rather than v-shaped if **removable panels** are provided over the entire presettling cell. Removable panels shall be at grade, have stainless steel lifting eyes, and weigh no more than 5 tons per panel.
3. One foot (average) of **sediment storage** must be provided in the presettling cell.
4. Where pipes enter and leave the presettling cell below the WQ design water surface, they shall be **sealed** using a non-porous, non-shrinking grout.
5. If an **oil retaining baffle** is used for control of floatables in the presettling cell, it must conform to the following:
   a. The baffle shall extend from 1 foot above to 1 foot below the WQ design water surface (minimum requirements) and be spaced a minimum of 5 feet horizontally from the inlet and 4 feet horizontally from the outlet.
   b. Provision for passage of flows in the event of plugging shall be provided.

c. An access opening and ladder shall be provided on both sides of the baffle into the presettling cell.

6. Sand filter vaults shall conform to the "**Materials**" and "**Structural Stability**" criteria specified for **detention vaults** in Section 5.1.3.

7. The **arch culvert sections** allowed for wetvaults shall not be used for sand filter vaults. Free access to the entire sand bed is needed for maintenance.

Access Requirements

Same as for **detention vaults** (see Section 5.1.3) except for the following **modifications:**

1. For facilities maintained by King County, removable panels must be provided over the entire sand bed. Panels shall be at grade, have stainless steel lifting eyes, and weigh no more than 5 tons per panel. Concrete bridge decking or industrial decking are options. If within the roadway, the panels must meet the traffic loading requirements of the *King County Road Design and Construction Standards (KCRDCS).*

2. A minimum of 24 square feet of ventilation grate must be provided for each 250 square feet of sandbed surface area. Grates may be located in one area if the sand filter is small, but placement at each end is preferred. Small grates may also be dispersed over the entire sand bed.

   Intent: Grates are important to allow air exchange above the sand. Poor air exchange will hasten anoxic conditions which may result in release of pollutants such as phosphorus and metals and cause objectionable odors.

Access Roads, Right of Way, and Setbacks

Same as for detention vaults (see Section 5.1.3).

Recommended Design Features

The following design features should be incorporated into sand filter vaults where feasible but are not specifically required:

1. The **floor of the presettling cell** should be **sloped toward the inlet** to allow for sediment accumulation and ease of cleaning.

2. A **geotextile fabric** is recommended over the sand bed to make sand bed maintenance easier. If used, the geotextile should be a flexible, high-permeability, three-dimensional matrix of the kind commonly used for erosion control. Sand bags should be used at 10 to 15 foot intervals to hold the geotextile in place.

3. **Additional grates** are recommended instead of solid panels to increase air contact with the sand bed.

Construction Considerations

Same as for sand filters (see page 6-116) plus, upon completion of installation, the vault shall be thoroughly cleaned and flushed prior to placement of sand and drain rock.

Maintenance Considerations

Maintenance considerations for sand filter vaults are similar to those described for sand filters (see p. 6-116). Maintenance practices need to be modified somewhat due to the sand filter being in a vault, including the use of safe confined space entry procedures.

❑ MODIFICATIONS FOR COMBINING WITH AN INFILTRATION VAULT

Where an infiltration vault is proposed for flow control, a sand filter vault (basic or large) may be combined with the infiltration facility by making the following modifications in design criteria:

1. The **"100-year Overflow Conveyance"** requirements for infiltration ponds (see Section 5.2.1) shall apply in place of the **"Overflow and Bypass"** requirements for sand filter vaults.
2. The **"Filter Composition"** criteria are changed to eliminate the requirement for an underdrain system. The third layer of the filter becomes the native infiltrative soils.
3. The **"Underdrain System"** and **"Underdrain Materials"** criteria for sand filter vaults are not applied. Water infiltrating through the sand layer need not be collected but may simply continue infiltrating downward into native soils.
4. **"Access requirements"** for grating may be reduced at the discretion of the design and review engineers.

   Intent: when water infiltrates into the soil directly without being collected by an underdrain system, the concern for pollutant release diminishes. Ventilation for odor control is, then, the only concern.

FIGURE 6.5.3.A SAND FILTER VAULT

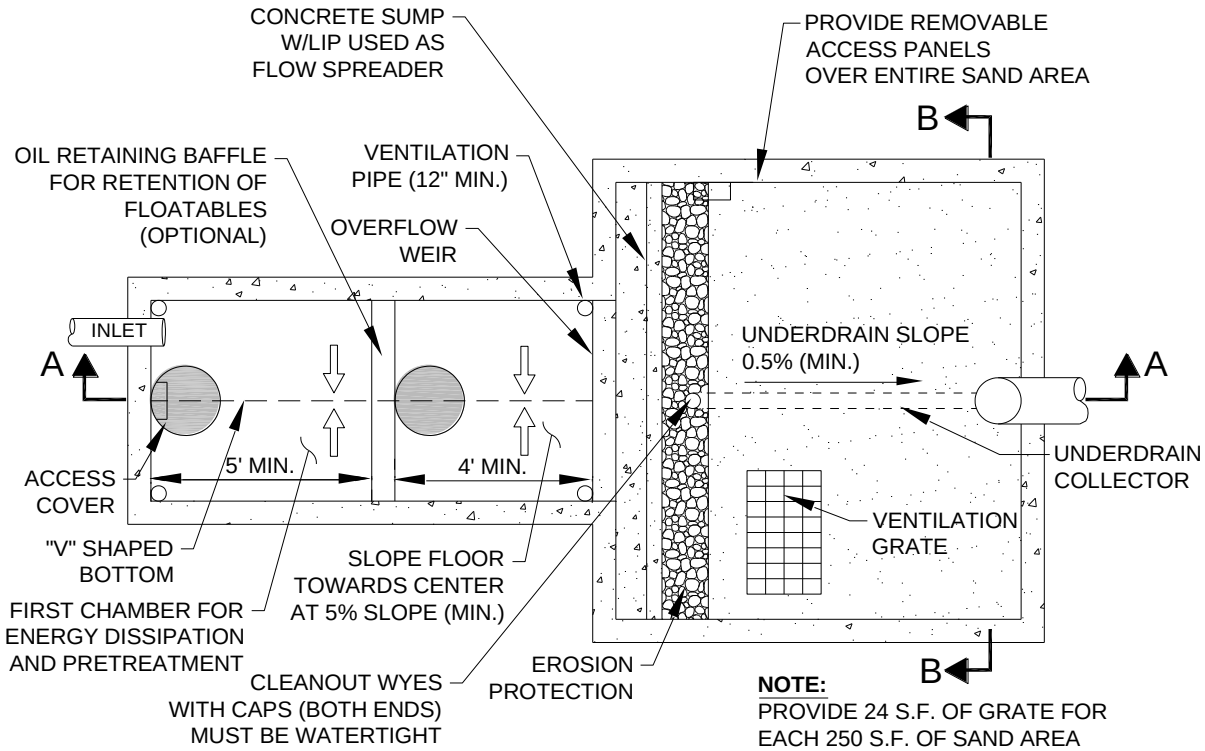

PLAN VIEW
NTS

FIGURE 6.5.3.A SAND FILTER VAULT (*CONTINUED*)

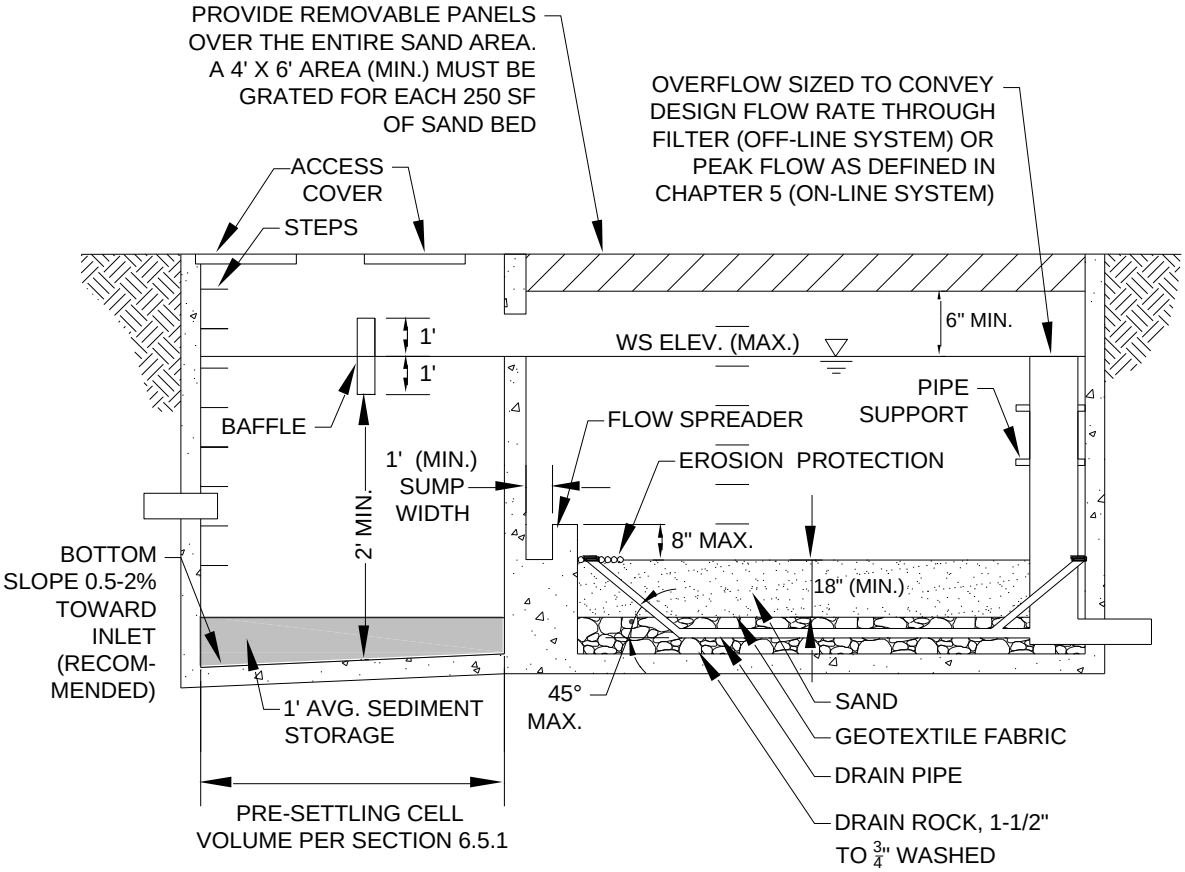

SECTION A-A
NTS

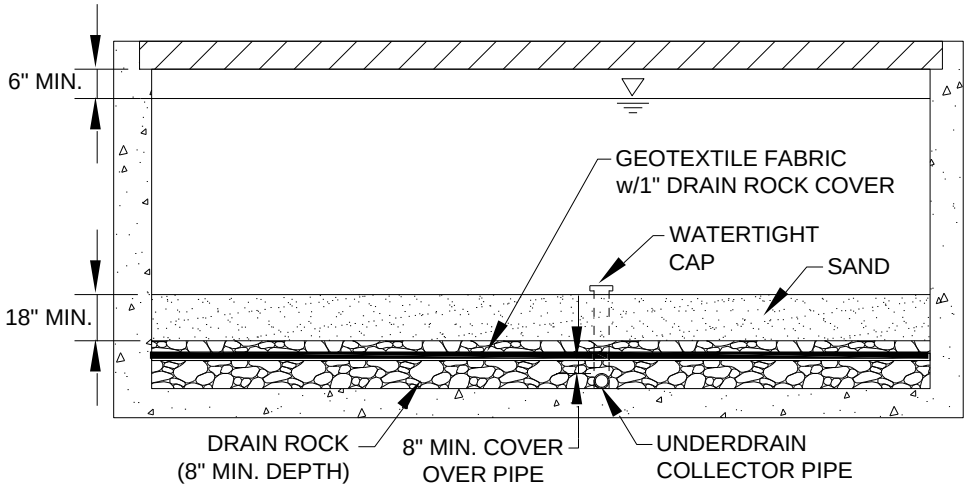

SECTION B-B
NTS

6.5.4 LINEAR SAND FILTERS

Linear sand filters are typically long, shallow, rectangular vaults. The vaults consist of two cells or chambers, one for settling coarse sediment from the runoff and the other containing sand. Stormwater flows into the second cell via a weir section that also functions as a flow spreader to distribute the flow over the sand. The outlet consists of an underdrain pipe system that connects to the storm drain system. As with other sand filters, linear filters come in two sizes, basic and large. The **basic linear sand filter** is designed to meet the Basic WQ menu goal of 80% TSS removal for the water quality design flow. The **large linear sand filter** is expected to meet the Sensitive Lake Protection menu goal of 50% total phosphorus removal.

Applications and Limitations

The linear sand filter is used for stormwater flows for two different treatment purposes:

1. To provide basic or second-tier water quality treatment, and
2. To treat runoff from ***high-use sites*** (i.e., ***sites*** generating higher than typical concentrations of oil and grease).

The presettling cell in a linear sand filter does not meet standard presettling cell requirements, so it is not expected to achieve the presettling goal of 50% TSS removal. Sediment storage capacity will also be more limited. These factors will necessitate more frequent maintenance than for a standard sand filter, and are likely to result in poorer net pollutant removal overall. Therefore, linear sand filters are discouraged where a different facility can be used. Linear sand filters are **best suited for treating small drainages** (less than two acres), particularly long, narrow areas. A linear sand filter may be located along the perimeter of a paved impervious surface or may be installed downstream of a filter strip where additional treatment is needed. If used for oil control, the filter should be located upstream from the main water quality treatment facility (i.e., wetpond, bioswale, or combined detention and wetpond).

Consult the water quality menus in Section 6.1 (p. 6-3) for information on how linear sand filters may be used to meet Core Requirement # 8 or Special Requirement #5.

6.5.4.1 METHODS OF ANALYSIS

Size the sand filter bed. A linear sand filter is sized based on the infiltration rate of the sand and the amount of runoff draining to the facility. The filter is sized to infiltrate the sand filter design flow without significant ponding above the sand. The sand filter bed for linear sand filters, basic and large, is sized using the modeled routing procedure of Section 6.5.2.1 (p. 6-107).

Size the sediment cell. The sediment cell width should be set after the sand filter width is determined. Use Table 6.5.4.A below to set the width of the sediment cell. If another WQ facility precedes the sand filter, the sediment cell may be waived.

TABLE 6.5.4.A SEDIMENT CELL WIDTH, LINEAR SAND FILTER

If Sand filter width is:	Width of sediment cell shall be:
1 to 2 feet	12 inches
2 to 4 feet	18 inches
4 to 6 feet	24 inches
Over 6 feet	One-third of sand cell width

6.5.4.2 DESIGN CRITERIA

Linear sand filter details are shown in Figure 6.5.4.A (p. 6-131).

Geometry, Sizing, and Overflow

1. A linear sand filter shall consist of **two cells** or chambers, a sediment cell and a sand bed cell, divided by a low divider wall. If the sand filter is preceded by another WQ facility, and the flow enters the sand filter along the side as sheet flow, the sediment cell may be waived.
2. Stormwater may enter the sediment cell by sheet flow or via a piped inlet.
3. **Minimum inside width** of the sand filter cell shall be 1 foot. **Maximum width** shall be 15 feet.
4. The two cells must be separated by a divider wall that is level and extends a minimum of 6 inches and a maximum of 12 inches above the sand bed. The riser overflow elevation must be adjusted for the wall height.
5. The **sand filter bed** shall be 18 inches deep, reducible to no less than 12 inches deep if grade limitations show a greater depth is not feasible. An 8-inch layer of **drain rock with perforated drainpipe** shall be installed beneath the sand layer.
6. The **drainpipe** shall have a minimum diameter of 6 inches and be wrapped in **geotextile** and sloped 0.5 % (min) to drain.
7. For design, the **maximum depth of ponding** over the sand shall be 1 foot.
8. If separated from traffic areas, a linear sand filter may be **covered or open**, but if covered, the cover must be removable for the entire length of the filter. Covers must be grated if flow to the filter is from sheet flow.
9. A linear sand filter shall have an **emergency overflow route**, either surface overland, tightline, or other structure for safely controlling the overflow, and shall meet the conveyance requirements specified in Chapter 1.

Structure Specifications

1. A linear sand filter vault shall be concrete (precast/prefabricated or cast-in-place). The concrete must conform to the **"Material"** requirements for **detention vaults** in Section 5.1.3.
2. Where linear sand filters are located in traffic areas, they must meet the **"Structural Stability"** requirements specified for **detention vaults** in Section 5.1.3. The sediment cell shall have a **removable grated cover** that meets HS-25 traffic loading requirements. The cover over the sand filter cell may be either solid or grated.
3. A minimum of 24 square feet of **ventilation grate** must be provided for each 250 square feet of sandbed surface area. Grates located over the sediment chamber are preferred. Grates may be in one central location or dispersed over the entire sand bed. Vertical grates may also be used such as at a curb inlet. If a sediment chamber is not required, ventilation shall be provided over the sandbed.

   Intent: Grates are important to allow air exchange above the sand. Poor air exchange will hasten anoxic conditions which may result in release of pollutants such as phosphorus and metals and cause objectionable odors.

Sand Specifications

Same as for sand filters (see Table 6.5.2.AB, p. 6-112).

Geotextile Materials

Same as for sand filters (see WSDOT Standard Specifications (2014), 9-33.2(1) Geotextile Properties / Table 1 / Moderate Survivability / Woven, and Table 2, Class A).

Underdrain Materials

Same as for sand filters (see page 6-113).

Access Roads, Right of Way, and Setbacks

Same as for detention vaults (see Section 5.1.3).

Construction Considerations

If put into service before the ***project site*** is stabilized, placement of the sand layer should be delayed, and the linear sand filter may be used with the gravel layer only. The gravel layer must be replaced and the vault cleaned when the ***project site*** is stabilized and the sand bed installed. King County will not assume maintenance responsibility or release financial guarantees until the final installation is complete.

Maintenance Considerations

Maintenance considerations for linear sand filters are similar to those for basic sand filters (see Section 6.5.2.2) except sediment should be removed from the sediment cell when the sediment depth exceeds 6 inches.

FIGURE 6.5.4.A LINEAR SAND FILTER

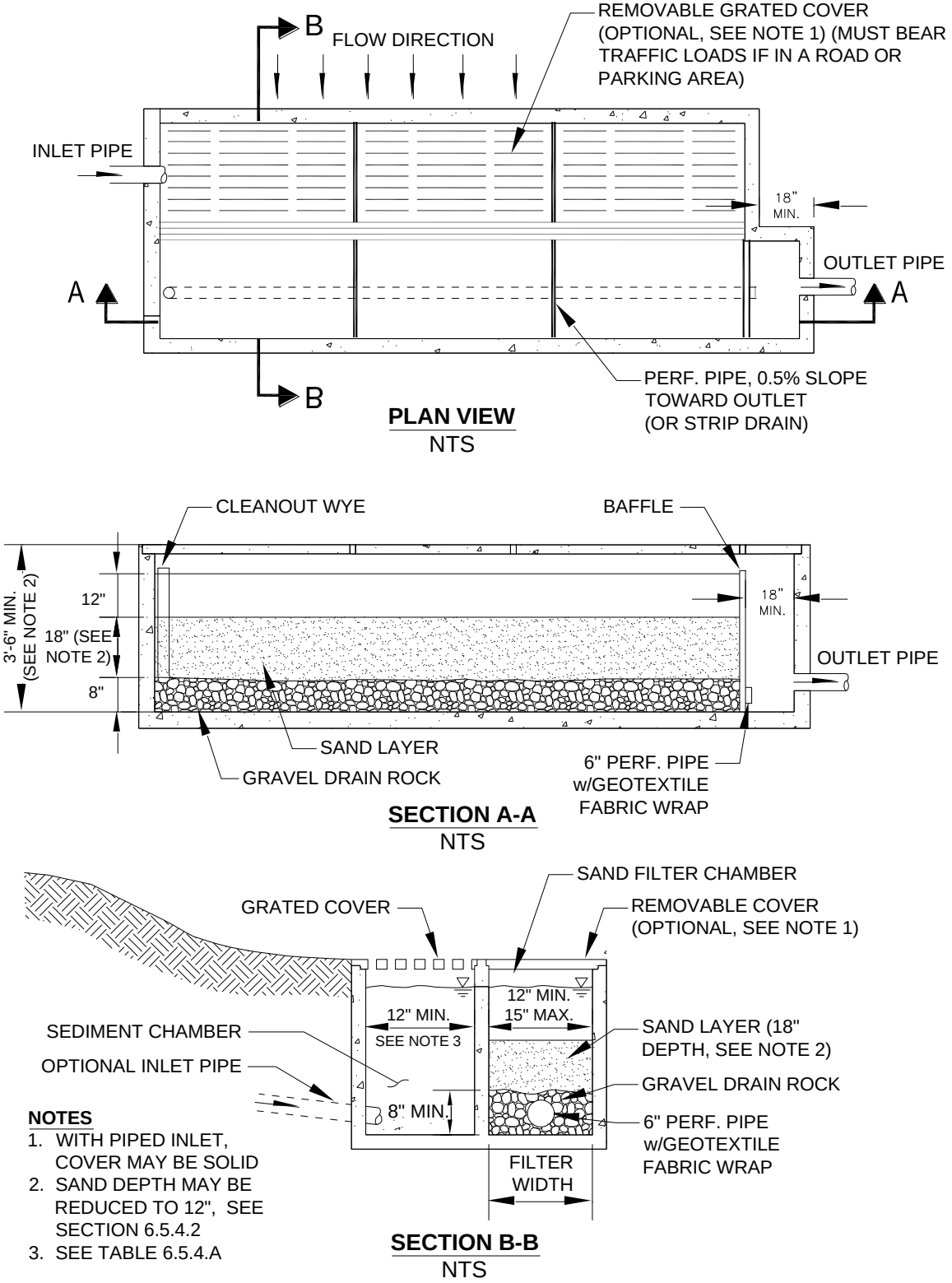

NOTES

1. WITH PIPED INLET, COVER MAY BE SOLID
2. SAND DEPTH MAY BE REDUCED TO 12", SEE SECTION 6.5.4.2
3. SEE TABLE 6.5.4.A

(This page intentionally left blank)

6.6 OIL CONTROL FACILITY DESIGNS

This section presents the methods, criteria, and details for oil control facilities that are not discussed in other sections. Included are the following facility designs:

"

- Oil/Water Separators," Section 0 (p. 6-140).

Other oil control facilities include wetvaults, with minor modifications (see Section 6.4.2, p. 6-86), and linear sand filters (see Section 6.5.4, p. 6-128). Non-facility options include parking lot washing with proper disposal of wash water and compliance with a NPDES permit that already addresses oil control. More information on non-structural options can be found in the High-Use menu, Section 6.1.5 (p. 6-15).

The information presented for each facility is organized into the following two categories:

1. **Methods of Analysis:** Contains a step-by-step procedure for designing and sizing each facility.
2. **Design Criteria:** Contains the details, specifications, and material requirements for each facility.

6.6.1 CATCH BASIN INSERTS

A *catch basin insert* is a device installed underneath a catch basin inlet that treats stormwater through filtration, settling, absorption, adsorption, or a combination of these mechanisms. Catch basin inserts vary greatly in form, some being rectangular, tray-like structures, some more like oil absorbent bags or pillows. Figure 6.6.1.A (p. 6-139) presents a schematic representation of a catch basin insert.

King County, in conjunction with other local agencies, has tested several catch basin inserts and found performance and removal rates to be highly variable, depending upon system configuration, pollutant particle size and concentration, and maintenance frequency. Because performance varies widely among the different devices, King County has developed a set of **performance criteria** that the devices must satisfy to be used for oil control pursuant to Special Requirement #5. Table 6.6.1.A (p. 6-134) lists the performance criteria and describes the tests to be used to evaluate whether a device meets the criteria.

Water Quality Treatment Objectives

The catch basin inserts manufactured to date typically have been configured to remove sediment, pollutants adsorbed to sediment, and oil and grease. The inserts described here **are intended to capture total petroleum hydrocarbons** (TPH) for use in new or redeveloped ***high-use sites*** (see Chapter 1 for information on ***high-use sites***). Devices meeting the design criteria outlined in Table 6.6.1.A (p. 6-134) should provide oil and grease removals comparable to those of other high-use treatment options. However, catch basin inserts provide little if any spill protection and do not meet spill-containment requirements unless the catch basin in which they are installed has a tee section.

While the inserts described here are focused on treating TPH, catch basin inserts may **also be configured with other sorbents to remove specific pollutants**. Owners proposing to use catch basin inserts to treat specific pollutants should obtain assistance from King County's water quality compliance program or from another pollution control agency such as the Department of Ecology.

Catch basin inserts also **may be used for sediment control during construction**, as described in Appendix D. In some instances, particularly for ***redevelopment projects*** at ***high-use sites***, existing catch basins may first be equipped with inserts for sediment control during construction and then be reconfigured (e.g., changing treatment media) to treat TPH following completion of construction activities.

TABLE 6.6.1.A
PERFORMANCE CRITERIA AND EVALUATION METHODS FOR CATCH BASIN INSERTS

	Criteria	Methods of Evaluation
1	Insert has ability to treat the water quality design flow for a minimum of 6 weeks under typical high-traffic conditions (in the Seattle area, this flow rate is approximately 0.042 cfs (19 gpm) for a drainage area of 5,000 square feet).	Subject the system to the maximum flow rate when new, and again after 4 and 6 weeks deployment. All flow must pass through the treatment area without short-circuiting or bypass.
2	Insert has ability to create a positive seal around grate to prevent low-flow bypass.	Install and observe unit under low-flow conditions. All flow must pass through the treatment area.
3	Media system functions so that its surface does not become plugged or blinded shortly after deployment and cause stormwater to bypass media before full use of media is realized.	Inspect media after 4 and 6 weeks deployment. If filtration rate as tested in Method #1 above has been compromised and media still can absorb oil, clogging is a problem.
4	Medium resists water saturation and maintains oil-absorbing properties for a minimum of 6 weeks under constantly wet conditions.	Examine media after 4 and 6 weeks deployment for signs of water saturation or degradation. Media in acceptable condition should still absorb oil and repel water.
5	Insert has means of preventing floating oil from escaping the unit. This requirement will be waived for inserts designed to be used with a tee section or down-turned elbow.	Inspect the insert for the presence of an under-over weir at the high-flow relief. If this or some comparable device exists, it is assumed that free oils will be retained.
6	Insert has means of preventing oil-soaked media from escaping the unit.	When the insert is new, and again after 4 to 6 weeks deployment, subject it to the peak flow rate (defined under Criterion #7) and observe whether media escapes.
7	Insert has ability to pass high flows without causing excessive ponding; no ponding to occur for the 25-year peak flow rate (in Seattle this rate is approximately 43 gpm for a drainage area of 5,000 square feet).	Close off all filtration surfaces with plastic sheeting and subject the insert to the required flow. No ponding around the drain inlet should occur for the 25-year peak rate.
8	Manufacturer provides complete installation and maintenance instructions.	Verify that instructions include information on the following: • Installation • Creating an adequate seal • Removal (including safety considerations) • Cleaning and replacement • Decant and disposal of liquid wastes • Media disposal guidance
	Desirable Features	**Methods of Evaluation**
1	Insert has high-flow bypass to prevent resuspension and washout.	Subject the insert to the flow rate calculated for Criterion #1, and then gradually increase the flow. Only the designed flow rate should pass through the treatment surfaces.
2	Service contract is provided.	There is no method for evaluating service contracts. Service contracts are listed as a desirable feature because they offer greater assurance of regular system maintenance and, consequently, treatment reliability.

Note: The evaluation tests assume the use of suitable oil-absorbing/adsorbing media (see "Material Requirements," p. 6-136).

Applications and Limitations

Consult the water quality menus in Section 6.1 (p. 6-3) for information on how catch basin inserts may be used to meet Special Requirement #5. Catch basin inserts are allowed to be used to meet the oil control requirements for new or redeveloped ***high-use sites*** where new plus replaced pollution generating impervious surfaces are less than 5,000 square feet AND new pollution generating pervious surfaces are less than ¾ acres in a threshold discharge area. High use sites exceeding the aforementioned threshold must use other oil control options. Note that catch basin inserts **shall not be in a public road right-of-way maintained by King County**. This is because the County does not have the resources needed to maintain catch basin inserts as frequently as needed for effective operation.

Catch basin inserts may be used to meet the oil control requirements for new or redevelopment ***high-use sites***. The minimal space requirements, planning and engineering needs, and implementation time make catch basin inserts particularly attractive for ***redevelopment projects***. The initial cost investment may be much lower than that of comparable oil treatment options. However, long-term costs associated with the **more frequent maintenance required** for catch basin inserts may offset some of the initial cost savings. Applicants considering catch basin inserts are encouraged to investigate maintenance costs associated with a particular device. Costs for maintaining catch basin inserts are on the order of $10 to $100 per unit per month, assuming monthly media replacement. The use of a catch basin insert is limited by drainage area, available space inside the catch basin, availability of maintenance personnel or services, and access.

Catch Basin Interior Space

Pipe stub-outs, misaligned inlet frames, and shallow drainage systems limit the use of catch basin inserts for redevelopment. Therefore, an applicant considering catch basin inserts for a ***redevelopment project*** must ensure that the devices are physically compatible with existing catch basins and will achieve the desired performance.

Availability of Maintenance Staff or Services

To be effective, a catch basin insert must be maintained at a frequency recommended by the manufacturer, but at least monthly (the cycle may be extended up to six weeks depending upon local conditions; see "Maintenance Requirements" on p. 6-137). Because of the importance of regular maintenance, **owners using catch basin inserts will be required to keep a maintenance log** that specifies when the facilities were cleaned or replaced; the log must be available for review by County inspectors. Commercial maintenance services for facilities like catch basin inserts are increasingly available. Applicants intending to use catch basin inserts should include maintenance in a routine program such as grounds maintenance or contract with a commercial service.

Applicants planning to use a catch basin insert should also **consider the weight of candidate devices** and whether the insert must be completely lifted out of the catch basin to be maintained. Some of the inserts currently produced are heavy and may require two people or machinery, such as a forklift, to perform routine maintenance.

6.6.1.1 METHODS OF ANALYSIS

Catch basin inserts require little design or analysis but must meet the design criteria listed in the following section.

6.6.1.2 DESIGN CRITERIA

Figure 6.6.1.A (p. 6-139) illustrates the general configuration of a catch basin insert. Catch basin inserts must meet the criteria outlined below.

General

1. Catch basin inserts shall not be used to satisfy Special Requirement #5 if they will be installed in a **public road right-of-way** and maintained by King County; another option from the High-Use menu must be used instead.
2. The **total maximum tributary area** for catch basin inserts shall not exceed 5,000 square feet per unit for new development projects. This limit is based on a target of treating 91 percent of the runoff volume. For a 5,000 square foot impervious area in the Seattle region, this flow is approximately 19 gallons per minute (gpm), or 0.04 cubic feet per second for the WQ design flow.[43] The total maximum tributary area shall not exceed 7,000 square feet per unit for ***redevelopment projects***.
3. If a manufacturer develops a catch basin insert that is proven to effectively treat flow rates higher than 20 gpm (0.045 cubic feet per second) without releasing previously trapped material (in accordance with Performance Criteria #1, #5, and #6 listed in Table 6.6.1.A, p. 6-134), King County may allow specific catch basin inserts to drain areas larger than 5,000 square feet.
4. A catch basin insert for a new development project shall be **designed to fit with a standard grate**, as specified in the *King County Road Design and Construction Standards* (see *KCRDCS* Drawing No. 7-013 and 7-014). If the insert is installed in an existing catch basin, **the insert shall be demonstrated to fit properly** so that there is a positive seal around the grate to prevent low-flow bypass. The maximum height of the grate above the top of the frame, with the insert installed, shall not exceed $^{3}/_{16}$ inch, and the grate should be non-rocking.
5. Catch basin inserts shall be accessible as needed for maintenance and should not be limited by continuous vehicle parking.

Pretreatment

While no pretreatment is required with a catch basin insert, the use of the source control BMPs described in the *King County Stormwater Pollution Prevention Manual* (available from DNRP) will decrease maintenance needs**.** *Catch basin inserts shall not be used in place of source control best management practices.*

Material Requirements

1. A catch basin insert must be fitted with **oil-absorbent/adsorbent filter media**, to be changed at least monthly (October to June) and whenever the filter media surface is covered with sediment. **Acceptable sorbent media** include wood fiber products such as A*bsorbent W* or S*uperSorb*, whole fibrous moss (need not be sphagnum), or *Petrolok*; these media have been investigated by the County and found to retain captured oil fairly effectively. *Streamguard*™ polymer (currently distributed by Foss Environmental) was also tested using the same method established by the County and found to achieve acceptable oil retention. Other products which absorb oil without significant release are also

[43] Testing by King County indicates that few of the devices tested could continue to meet treatment requirements at flow rates in excess of about 20 gpm. In addition, due to the very short contact time and potential for flushing previously trapped materials, treatment would be compromised at higher flow rates.

acceptable.[44] Other polypropylene-based products are expected to be acceptable, although none but the Streamguard™ polymer have been investigated to date.

2. **Unacceptable filter media**. Cedar Grove compost was tested and found unacceptable for oil retention. Compost from Stormwater Management, Inc., who produce a patented CFS®, was also tested. Although it performed fairly well, it did not retain oil as well as the other products tested. Therefore, CFS® leaf compost shall not be used in catch basin inserts for oil control. Other materials that are unsuitable for use in catch basin inserts include Fuller's or diatomaceous earth and kitty litter.

3. To minimize the generation of solid waste and the consumption of natural resources, systems constructed of or using **recycled products are preferred**. Reusable filter materials shall be refreshed according to the manufacturer's instructions.

Construction Requirements

1. Installation of a catch basin insert for a new development or ***redevelopment project*** shall follow the manufacturer's recommended procedures. The insert should be installed in the catch basin after the site has been paved or stabilized (for new development) or after completion of construction (for a redevelopment site that is already paved).

2. If a catch basin insert is **used for sediment control during construction**, it shall be reconfigured in accordance with the manufacturer's recommendations. When used for sediment control, the insert should be inspected at least weekly and maintained if needed (see Appendix D for information on using the insert for sediment control).

Maintenance Requirements

Catch basin insert systems require more frequent maintenance than other oil treatment systems. While maintenance requirements of individual units may be relatively minor, the need for diligence and the potentially large number of units required in place of other more typical oil treatment systems make sound maintenance planning essential to the successful use of these devices. Therefore, the following provisions are necessary for proper maintenance:

1. A **drainage facility declaration of covenant and grant of easement** per Reference Section 8-J (or equivalent) must be recorded allowing King County to inspect facilities.

2. Maintenance needs vary from site to site based on the type of land use activity, implementation of source controls, and weather conditions. Catch basin inserts should be **maintained at a frequency recommended by the manufacturer**, but at least monthly during the wet season (October through April) and once every 2 months during the remainder of the year. *Note: During the first wet season, it is recommended that inspection be carried out every other week to determine whether a shorter maintenance cycle is needed for the particular site.*

3. Maintenance shall include full replacement or renewal of oil absorbent/adsorbent material. In addition, when maintaining the insert, the catch basin sump should be inspected for sediment accumulation. Sediment should be removed if the depth of sediment in the sump is greater than 0.5 feet. **An inspection and maintenance log shall be kept onsite** and made available to County inspectors on an as-needed basis. At a minimum, the maintenance log shall include the following information: date, type of maintenance performed, names of persons performing the work, and signature. Persons conducting maintenance activities should wear rubber gloves for health and safety protection while handling used filter media.

[44] Criteria used for acceptable absorbent materials are that a completely oil-saturated sample of the material does not release more than 10 mg/L of total petroleum hydrocarbon in any two minute period when flushed with tap water (running at a rate of 0.3 to 0.5 gpm) for 10 consecutive minutes.

4. The **operation and maintenance instructions** from the catch basin insert manufacturer shall be kept with the maintenance log. Manufacturer's instructions should include installation, removal (including safety instructions), cleaning and replacement (including a practical means of determining when the unit is in need of service), and media disposal guidance (including decanting of liquid wastes).

5. Owners should follow the manufacturer's instructions for **dewatering filter media**, which vary depending on the type of unit. Generally, catch basin inserts that drain by gravity can be dewatered in place during dry weather. If an owner is unable to perform monthly maintenance because there has not been sufficient dry weather, the maintenance period may be extended up to an additional two weeks. If by the end of the additional two weeks there has been insufficient dry weather to allow dewatering, the owner shall make other arrangements for dewatering the filter media. Such arrangements could include use of a commercial service, dewatering the insert in a watertight container, or other methods meeting environmental regulations. Media shall be disposed of in accordance with applicable regulations, including the Seattle-King County Department of Public Health solid waste regulations (Title 10) and State dangerous waste regulations (WAC 173-303). In most cases, dewatered filter media may be disposed of as solid waste.

FIGURE 6.6.1.A SCHEMATIC OF CATCH BASIN INSERT

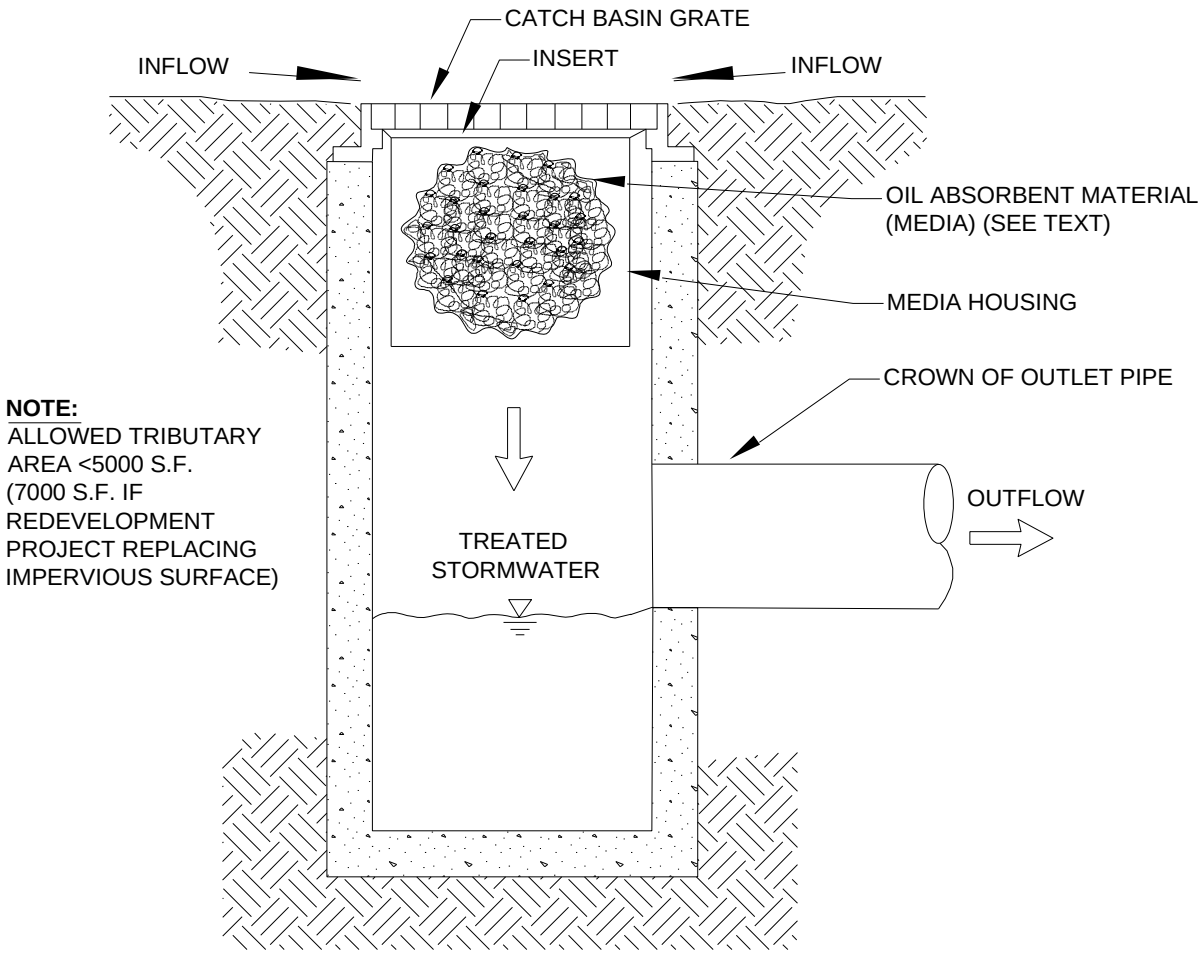

SECTION VIEW
NTS

6.6.2 OIL/WATER SEPARATORS

Oil/water separators rely on passive mechanisms that take advantage of oil being lighter than water. Oil rises to the surface and can be periodically removed. The two types of oil/water separators typically used for stormwater treatment are the baffle type or API (American Petroleum Institute) oil/water separator and the coalescing plate oil/water separator.

Baffle oil/water separators use vaults that have multiple cells separated by baffles extending down from the top of the vault (see Figure 6.6.2.D on page 6-151 for schematic details). The baffles block oil flow out of the vault. Baffles are also commonly installed at the bottom of the vault to trap solids and sludge that accumulate over time. In many situations, simple floating or more sophisticated mechanical oil skimmers are installed to remove the oil once it has separated from the water.

Coalescing plate separators are typically manufactured units consisting of a baffled vault containing several inclined corrugated plates stacked and bundled together (see Figure 6.6.2.E on page 6-152 for schematic details). The plates are equally spaced (typical plate spacing ranges from $^1/_4$-inch to 1 inch) and are made of a variety of materials, the most common being fiberglass and polypropylene. Efficient separation results because the plates reduce the vertical distance oil droplets must rise in order to separate from the stormwater. Once they reach a plate, oil droplets form a film on the plate surface. The film builds up over time until it becomes thick enough to migrate upward because of oil's lower density relative to water. When the film reaches the edge of the plate, oil is released as large droplets which rise rapidly to the surface, where the oil accumulates until the unit is maintained. Because the plate pack increases treatment effectiveness significantly, coalescing plate separators can achieve a specified treatment level with a smaller vault size than a simple baffle separator.

Oil/water separators are meant to treat stormwater runoff from more intensive land uses, such as high-use sites, and facilities that produce relatively high concentrations of oil and grease. Although baffle separators historically have been used to remove larger oil droplets (150 microns or larger), they may also be sized to remove smaller oil droplets. Both separators may be used to meet a **performance goal of 10 to 15 mg/L** by designing the unit to removal oil particles 60 microns and larger.

Applications and Limitations

Oil/water separators are designed to remove free oil and are not generally effective in separating oil that has become either chemically or mechanically emulsified and dissolved in water. Therefore, it **is desirable for separators be installed upstream of facilities and conveyance structures that introduce turbulence and consequently promote emulsification**. Emulsification of oil can also result if surfactants or detergents are used to wash parking areas that drain to the separator. Detergents shall not be used to clean parking areas unless the wash water is collected and disposed of properly (usually to the sanitary sewer).

There is concern that oil/water separators used for stormwater treatment have not performed to expectations[45] . Therefore, emphasis should be given to proper application, design, operations and maintenance – particularly sludge and oil removal, and prevention of coalescing-plate fouling and plugging[46].

Oil/water separators are **best located in areas where the tributary drainage area is nearly all impervious, and a fairly high load of petroleum hydrocarbons is likely to be generated**. Oil/water separators are not recommended for areas with very dilute concentrations of petroleum hydrocarbons since

[45] WA Ecology 2014, SWMMWW, citing: Schueler, Thomas R., "Water Quality inlets/Oil Grit Separators," BMP Fact Sheet #11, Current Assessment of Urban Best Management Practices, March 1992.; Watershed Protection Techniques, "Hydrocarbon Hotspots in the Urban Landscape: Can They be Controlled?", Feb. 1994.

[46] WA Ecology 2014, SWMMWW, citing: U.S. Army Corps of Engineers, "Selection and Design of Oil and Water Separators," August 26, 1994.

their performance is not effective at low concentrations. Excluding unpaved areas helps to minimize the amount of sediment entering the vault, reducing the need for maintenance. A unit that fails and ceases to function can release previously trapped oil to the downstream receiving water, both in release from the oily sediments and from entrainment of surface oils.

Wetvaults may also be modified to function as baffle oil/water separators (see design criteria for wetvaults, Section 6.4.2.2, p. 6-86).

Consult the water quality menus in Section 6.1 (p. 6-3) for information on how baffle and coalescing plate oil/water separators may be used to meet Special Requirement # 5.

6.6.2.1 METHODS OF ANALYSIS

Background

Generally speaking, in most oil and water mixtures the degree of oil/water separation that occurs is dependent on both the time the water is detained in the separator and the oil droplet size. The sizing methods in this section are based on Stokes' law:

$$V_T = \frac{g\left(d_p - d_c\right)D_o^2}{18\mu} \tag{6-25}$$

where V_T = rise velocity of oil droplet
g = gravitational constant
d_p = density of oil droplet to be removed
d_c = density of carrier fluid
D_o = diameter of oil droplet
μ = absolute viscosity of carrier fluid

The basic assumptions inherent in Stokes' law are: (1) flow is laminar, and (2) the oil droplets are spherical.

Traditional baffle separators are designed to provide sufficient hydraulic residence time to permit oil droplets to rise to the surface. The residence time T_r is mathematically expressed as follows:

$$T_r = \frac{V}{Q} \tag{6-26}$$

where V = effective volume of the unit or container, or $A_s \times H$, where
A_s = surface area of the separator unit, and
H = height of water column in the unit

Q = hydraulic capacity or flow through the separator

The time required for the oil droplet to rise to the surface within the unit is found by the relation:

$$T_T = \frac{H}{V_T} \tag{6-27}$$

where V_T = rise velocity of the oil droplet

The oil droplet rises to the water surface if the residence time in the separator is at least equal to the oil droplet rise time. This can be expressed as follows:

$$T_r = T_T$$

By substituting terms and simplifying:

$$V_T = \frac{Q}{A_s} \tag{6-28}$$

where A_s = surface area of the separator unit

The ratio in Equation (6-28) is designated as the surface overflow rate or loading rate. It is this rate that governs the removal efficiency of the process and predicts whether an oil droplet will be removed by the separator.

Method for Baffle Separators

Design steps for the baffle separator are summarized below:

Step 1: Determine the WQ design flow (*Q*). The facility is sized based on the WQ design flow (see Section 6.2.1, p. 6-17). The separator **must be designed as an off-line facility**. That is, flows higher than the WQ design flow (i.e., the modified off-line flow rate) must bypass the separator.

Step 2: Calculate the minimum vertical cross-sectional area. Use the following equation:

$$A_c = \frac{Q}{V_H} \tag{6-29}$$

where A_c = minimum cross-sectional area (sf)
Q = modified off-line water quality design flow per Section 6.2.1 (cfs)
V_H = design horizontal velocity (fps)

Set the horizontal velocity V_H equal to 15 times the oil droplet's rise rate V_T. A **design rise rate of 0.033 feet per minute shall be used** unless it is demonstrated that conditions of the influent or performance function warrant the use of an alternative value. Using the 0.033 feet per minute rise rate results in V_H = 0.008 fps (= 0.495 fpm).

Step 3: Calculate the width and depth of the vault. Use the following equation:

$$D = \frac{A_c}{W} \tag{6-30}$$

where D = maximum depth (ft)
W = width of vault (ft)
and where A_c is from Step 2 above.

The computed depth D must meet a depth-to-width ratio r of between 0.3 and 0.5 (i.e., $0.3 \le D/W \le 0.5$).
Note: $D = (r\,A_c)^{0.5}$ and
$W = D/r$ and
r = the depth-to-width ratio

Step 4: Calculate the length of the vault. Use the following equation:

$$L = FD\left(\frac{V_H}{V_T}\right) \tag{6-31}$$

where L = length of vault (ft)
F = turbulence and short-circuiting factor (unitless, see Figure 6.6.2.A)
V_H = horizontal velocity (ft/min)
V_T = oil droplet rise rate (ft/min)
D = depth (ft)

The turbulence factor F shall be selected using a V_H/V_T ratio of 15, so $F = 1.64$.

Therefore Equation (6-31) becomes: $L = 1.65 \times 15 \times D$

FIGURE 6.6.2.A TURBULENCE FACTOR PLOT

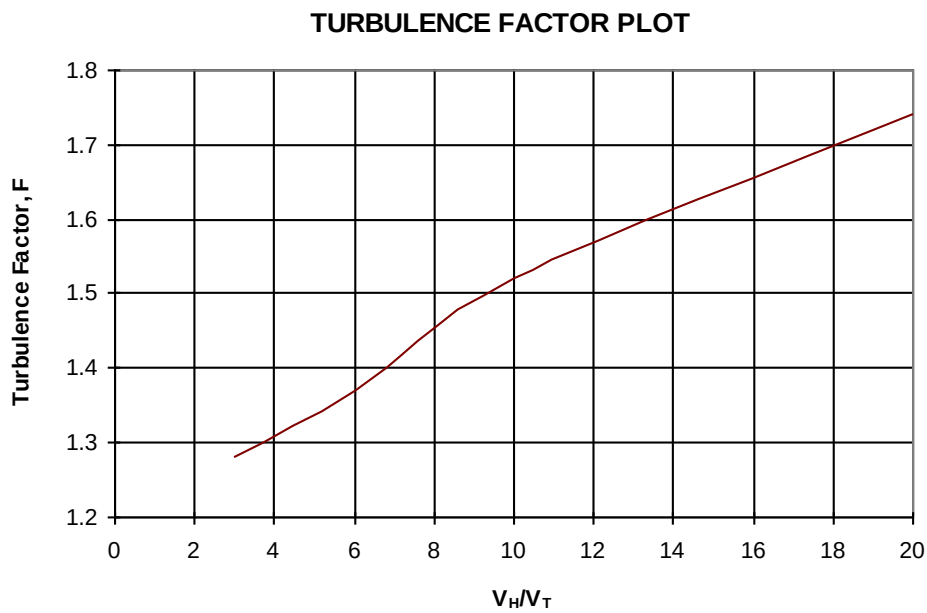

Step 5: Check the separator's length-to-width ratio. The length L of the vault must be at least 5 times its width in order to minimize effects from inlet and outlet disturbances. The length of the forebay shall be approximately $L/3$.

Step 6: Compute and check that the minimum horizontal surface area (A_H) criterion is satisfied. This criterion is expressed by the following equation:

$$A_H = \left(\frac{1.65Q}{0.00055}\right) \leq LW \tag{6-32}$$

Step 7: Compute and check that the horizontal surface area of the vault forebay. This area must be greater than 20 square feet per 10,000 square feet of tributary impervious area. The length of the forebay (L/3) may be increased to meet this criterion without having to increase the overall length of the vault.

Step 8: Design the flow splitter and high-flow bypass. See Section 6.2.5 (p. 6-32) for information on flow splitter design.

Method for Coalescing Plate Separators

Coalescing plate separators are designed using the same basic principles as baffle separators. The major difference is that in the baffle separator, horizontal separation is related only to water surface area, while in the coalescing plate separator, horizontal separation is related to the sum of the plan-areas of the plates. The treatment area is increased by the sum of the horizontal projections of the plates being added, and is referred to as the plate *effective separation area*.

The basic procedure for designing a coalescing plate separator is to determine the effective separation area required for a given design flow. The specific vault sizing then depends on the manufacturer's plate design. The specific design, analysis, configuration, and specifications for coalescing plates are empirically based and variable. Manufacturers' recommendations may be used to vary the recommendations given below.

Step 1: Determine the WQ design flow. The coalescing plate oil/water separator must be sized based on the WQ design flow (see Section 6.2.1, p. 6-17). The separator **must be designed as an off-line facility**; flows higher than the WQ design flow (i.e., the modified off-line flow rate) must bypass the separator.

Step 2: Calculate the plate minimum effective separation area (A_h). A_h is found using the following equation:

$$A_h = \frac{60 \cdot Q}{0.00386 \cdot \left(\frac{S_w - S_o}{\mu} \right)} \tag{6-33}$$

where S_w = specific gravity of water = 1.0
S_o = specific gravity of oil = 0.85
μ = absolute viscosity of water (poises); use 0.015674 for temp = 39° F
Q = modified off-line water quality design flow rate per Section 6.2.1 (cfs)
A_h = required effective (horizontal) surface area of plate media (sf).

Equation (6-33) is based on an oil droplet diameter of 60 microns. A graphical relation of Equation (6-33) is shown in Figure 6.6.2.B below. This graph may be used to determine the required effective separation surface area of the plate media.

FIGURE 6.6.2.B EFFECTIVE SEPARATION SURFACE VS FLOW RATE

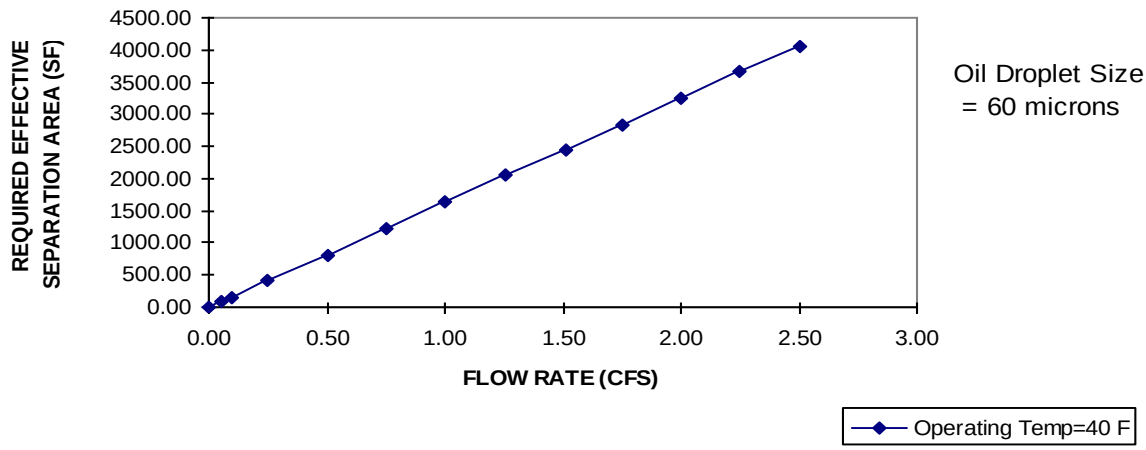

Step 3: Calculate the collective projected surface area (A_p). A key design step needed to assure adequate performance of the separator unit is to convert the physical plate area (the surface area of the plates if laid flat) into the effective (horizontal) separation surface area A_h (calculated in step 2). The effective separation surface area A_h is based on the collective projected horizontal surface area A_p of the plates where the plates are inclined, rather than laid flat.

$$A_h = A_p = A_a (\cos H) \qquad (6\text{-}34)$$

where A_a = actual collective plate area of the plate configuration (sf)
H = angle of the plates to the horizontal (degree)

This equation is represented graphically in Figure 6.6.2.C below. The designer shall make sure that the manufacturer sizes the oil/water separator using the projected surface area rather than the actual plate area. *Note: For this method, only the **lower plate surface** may be counted as effective separation surface, regardless of manufacturer's claims.*

FIGURE 6.6.2.C PROJECTED HORIZONTAL PLATE AREA FOR COALESCING PLATE OIL/WATER SEPARATOR

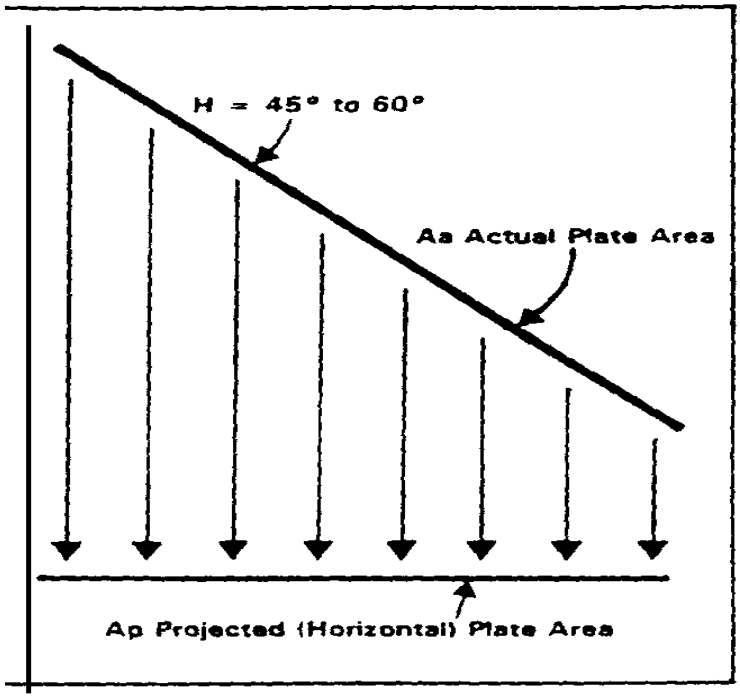

Step 4: Check with specific separator manufacturers. Check with specific manufacturers to choose a separator that provides the required actual collective plate area calculated in Step 3, and meets the other design criteria given in the next section, p. 6-147. The specific vault design will depend upon each manufacturer's design. The geometric configuration and dimensions of the plate pack as well as the vault design are variable and flexible depending on each manufacturer's product.

Table 6.6.2.A (p. 6-147) provides approximate vault sizes for rough planning purposes. In reality, various manufacturers have quite different designs, both for the plate packs themselves as well as for forebay and afterbays. In addition, standard pre-cast vault dimensions vary with each manufacturer. These various factors can greatly affect the volume of vault needed to provide a given effective separation area. The numbers in Table 6.6.2.A should therefore be considered "order of magnitude" estimates only.

TABLE 6.6.2.A APPROXIMATE COALESCING PLATE OIL/WATER SEPARATOR VAULT DIMENSIONS*	
Area of Effective Separation (square feet)	**Approximate vault volume required (cubic feet) for plates with 1/2 inch spacing and inclined 60 degrees from horizontal (cubic feet)**
100	150
200	240
300	330
600	530
1,200	890
2,400	1150
3,200	2090
4,800	2640
** Order of magnitude estimates for planning purposes only. Actual vault volumes vary considerably depending on separator design features and pre-cast vault dimensions.*	

6.6.2.2 DESIGN CRITERIA

Details for a typical baffle oil/water separator are shown in Figure 6.6.2.D (p. 6-151). **Other designs** and configurations of separator units and vaults are allowed, including above ground units. However, they must produce equivalent treatment results and treat equivalent flows as conventional units.

General Siting

1. Oil/water separators **must be installed off-line**, bypassing flows greater than the WQ design flow described in Step 1 above.
2. When a separator is required, it **shall precede other water quality treatment facilities** (except wetvaults). It may be positioned either upstream or downstream from flow control facilities, since there are both advantages and disadvantages with either placement.
3. In moderately pervious soils where **seasonal groundwater** may induce flotation, buoyancy tendencies shall be balanced by ballasting or other methods as appropriate.
4. Any **pumping devices** shall be installed downstream of the separator to prevent oil emulsification in stormwater.

Vault Structure — General

The following criteria apply to both baffle and coalescing plate separators:

1. Separator vaults shall be **watertight**. Where pipes enter and leave a vault below the WQ design water surface, they shall be sealed using a non-porous, non-shrinking grout.
2. Separator vaults shall have a **shutoff mechanism** on the outlet pipe to prevent oil discharges during maintenance and to provide emergency shut-off capability in case of a spill. A valve box and riser

shall also be provided according to the design criteria for wetponds (see "Inlet and Outlet Criteria," Section 6.4.1.2, p. 6-76).

Vault Structure — Baffle Separators

In addition to the above general criteria, the following criteria apply specifically to baffle separators:

1. Baffle separators shall be divided into **three compartments**: a forebay, an oil separation cell, and an afterbay. The **forebay** is primarily to trap and collect sediments, encourage plug flow, and reduce turbulence. The **oil separation cell** traps and holds oil as it rises from the water column, and it serves as a secondary sediment collection area. The **afterbay** provides a relatively oil-free cell before the outlet, and it provides a secondary oil separation area and holds oil entrained by high flows.
2. The **length of the forebay** shall be approximately $^1/_3$ to $^1/_2$ of the length of the vault, *L*. In addition, the **surface area of the forebay** must be at least 20 square feet per 10,000 square feet of tributary impervious area draining to the separator.
3. A **removable flow-spreading baffle**, extending from the surface to a depth of up to $^1/_2$ the vault depth (*D*) is required to spread flows.
4. The **removable bottom baffle** (sediment-retaining baffle) shall be a minimum of 24 inches (see Figure 6.6.2.D, p. 6-151), and located at least 1 foot from the oil-retaining baffle. A "window wall" baffle may be used, but the area of the window opening must be at least three times greater than the area of the inflow pipe.
5. A **removable oil retaining baffle** shall be provided and located approximately $^1/_4$ *L* from the outlet wall or a minimum of 8 feet, whichever is greater (the 8-foot minimum is for maintenance purposes). The oil-retaining baffle shall extend from the elevation of the water surface to a depth of at least 50% of the design water depth. Various configurations are possible, but the baffle shall be designed to minimize turbulence and entrainment of sediment.
6. Baffles may be fixed rather than removable if additional entry ports and ladders are provided so that both sides of the baffle are accessible by maintenance crews.
7. Baffle separator vaults shall have a minimum **length-to-width ratio** of 5.
8. The **design water depth** (*D*) shall be no deeper than 8 feet unless approved by DLS-Permitting.
9. Baffle separator vaults shall have a **design water depth-to-width** ratio of between 0.3 and 0.5.

Vault Structure — Coalescing Plate Separators

In addition to the above general criteria, the following criteria apply specifically to coalescing plate separators:

1. Coalescing plate separators shall be divided by baffles or berms into **three compartments**: a forebay, an oil separation cell which houses the plate pack, and an afterbay. The **forebay** controls turbulence and traps and collects debris. The **oil separation cell** captures and holds oil. The **afterbay** provides a relatively oil-free exit cell before the outlet.
2. The **length of the forebay** shall be a minimum of $^1/_3$ the length of the vault, *L* (but $^1/_2$ *L* is recommended). In addition, it is recommended that the **surface area of the forebay** be at least 20 square feet per 10,000 square feet of tributary impervious area draining to the separator. In lieu of an attached forebay, a separate grit chamber, sized to provide be at least 20 square feet per 10,000 square feet of tributary impervious area, may precede the oil/water separator.
3. An **oil-retaining baffle** shall be provided. If maintained by the County, the baffle must be a minimum of 8 feet from the outlet wall (for maintenance purposes). For large units, a baffle position of 0.25*L* from the outlet wall is recommended. The oil-retaining baffle shall extend from the water surface to a depth of at least 50% of the design water depth. Various configurations are possible, but the baffle shall be designed to minimize turbulence and entrainment of sediment.

4. A bottom **sediment-retaining baffle** shall be provided upstream of the plate pack. The minimum height of the sludge-retaining baffle shall be 18 inches. Window walls may be used, but the window opening must be a minimum of three times greater than the area of the inflow pipe.
5. It is recommended that entire space between the sides of the plate pack and the vault wall be filled with a solid but light-weight removable material such as a **plastic or polyethylene foam** to reduce short-circuiting around the plate pack. Rubber flaps are not effective for this purpose.
6. If a separator will be maintained by King County, the **separator plates** shall meet the following requirements:
   a) Plates shall be inclined at 45° to 60° from the horizontal. This range of angles exceeds the angle of repose of many solids and therefore provides more effective droplet separation while minimizing the accumulation of solids on the individual plates.
   b) Plates shall have a minimum plate spacing of $^1/_2$-inch and have corrugations.
   c) Plates shall be securely bundled in a plate pack so that they can be removed as a unit.
   d) The plate pack shall be a minimum of 6 inches from the vault bottom.
   e) There should be 1 foot of head space between the top of the plate pack and the bottom of the vault cover.

Inlet and Outlet

1. The **inlet shall be submerged**. A tee section may be used to submerge the incoming flow and must be at least 2 feet from the bottom of the tank and extend above the WQ design water surface.

Intent: The submerged inlet is to dissipate energy of the incoming flow. The distance from the bottom is to minimize resuspension of settled sediments. Extending the tee to the surface allows air to escape the flow, thus reducing turbulence. Alternative inlet designs that accomplish these objectives are acceptable.

2. The **vault outlet pipe** shall be sized to pass the modified off-line WQ design flow before overflow (using the pipe sizing methods in Chapter 4). The vault outlet pipe shall be back-sloped or have a tee extending
   1 foot above and below the WQ design water surface to provide for secondary trapping of oils and floatables in the wetvault. *Note: The invert of the outlet pipe sets the **WQ design water surface** elevation.*

Material Requirements

1. All **metal parts shall be corrosion-resistant**. Zinc and galvanized materials shall not be used unless there is no substitute, because of aquatic toxicity potential. Painting or other coating of metal parts for corrosion resistance is not allowed due to lack of longevity and lack of standardization or assurance of non-toxic coatings.
2. **Vault baffles** shall be concrete, stainless steel or other acceptable material and shall be securely fastened to the vault.
3. **Gate valves**, if used, shall be designed for seating and unseating heads appropriate for the design conditions.
4. For coalescing plate separators, **plate packs** shall be made of stainless steel or polypropylene.

Access Requirements

Same as for **detention vaults** (see Section 5.1.3) except for the following **modifications:**

1. Access to **each compartment** is required. If the length or width of any compartment exceeds 50 feet, an additional access point for each 50 feet is required.

2. Access points for the **forebay and afterbay** shall be positioned partially over the inlet or outlet tee to allow visual inspection as well as physical access to the bottom of the vault.
3. For **coalescing plate separators**, the following also apply:
   a) Access to the **compartment containing the plate pack** shall be a removable panel or other access able to be opened wide enough to remove the entire coalescing plate bundle from the cell for cleaning or replacement. Doors or panels shall have stainless steel lifting eyes, and panels shall weigh no more than 5 tons per panel.
   b) A **parking area or access pad** (25-foot by 15-foot minimum) shall be provided near the coalescing plate bundles to allow for their removal from the vault by a truck-mounted crane or backhoe, and to allow for extracting accumulated solids and oils from the vault using a vactor truck.

Access Roads, Right of Way, and Setbacks

Same as for detention vaults (see Section 5.1.3).

Recommended Design Features

1. A **gravity drain** for maintenance is recommended if grade allows. The drain invert should be at a depth equal to the depth of the oil retaining baffle. Deeper drains are encouraged where feasible.
2. The recommended design features for wetvaults should be applied.
3. If large amounts of oil are likely to be captured, a bleed-off pipe and separate waste oil tank may be located adjacent to the vault to channel separated oils into the tank. This improves the overall effectiveness of the facility, especially if maintenance is only annually. It also improves the quality of the waste oil recovered from the facility.

Construction Considerations

1. Construction of oil/water separators shall follow and conform to the manufacturer's recommended construction procedures and installation instructions as well as Chapter 7 of the *King County Road Design and Construction Standards*. Where the possibility of vault flotation exists, the vault shall be properly anchored in accordance with the manufacturer's recommendations or an engineer's design and recommendations.
2. Particular care must be taken when inserting coalescing plate packs in the vault so as not to damage or deform the plates.
3. Upon completion of installation, the oil/water separator shall be thoroughly cleaned and flushed prior to operating.

Maintenance Considerations

1. Oil/water separators must be cleaned regularly to ensure that accumulated oil does not escape from the separator. Separators should be cleaned by November 15 of each year to remove accumulation during the dry season. They must also be cleaned after spills of polluting substances such as oil, chemicals, or grease. Vaults must also be cleaned when inspection reveals any of the following conditions:
   a) Oil accumulation in the oil separation compartment equals or exceeds 1 inch, unless otherwise rated for greater oil accumulation depths recommended by the specific separator manufacturer.
   b) Sediment deposits in the bottom of the vaults equals or exceeds 6 inches in depth.
2. For the first several years, oil/water separators should be checked on a quarterly basis for proper functioning and to ensure that accumulations of oil, grease, and solids in the separator are at acceptable levels. Effluent from the vault shall also be observed for an oil sheen to ensure that oil concentrations are at acceptable levels and that expected treatment is occurring. Separators should also be inspected after large storm events (about 2 inches in 24 hours).

3. Access to separators shall be maintained free of all obstructions, and units shall be readily accessible at all times for inspection and maintenance.
4. Maintenance personnel entering oil/water separator vaults should follow the state regulations pertaining to confined space entry, if applicable.

FIGURE 6.6.2.D BAFFLE OIL/WATER SEPARATOR

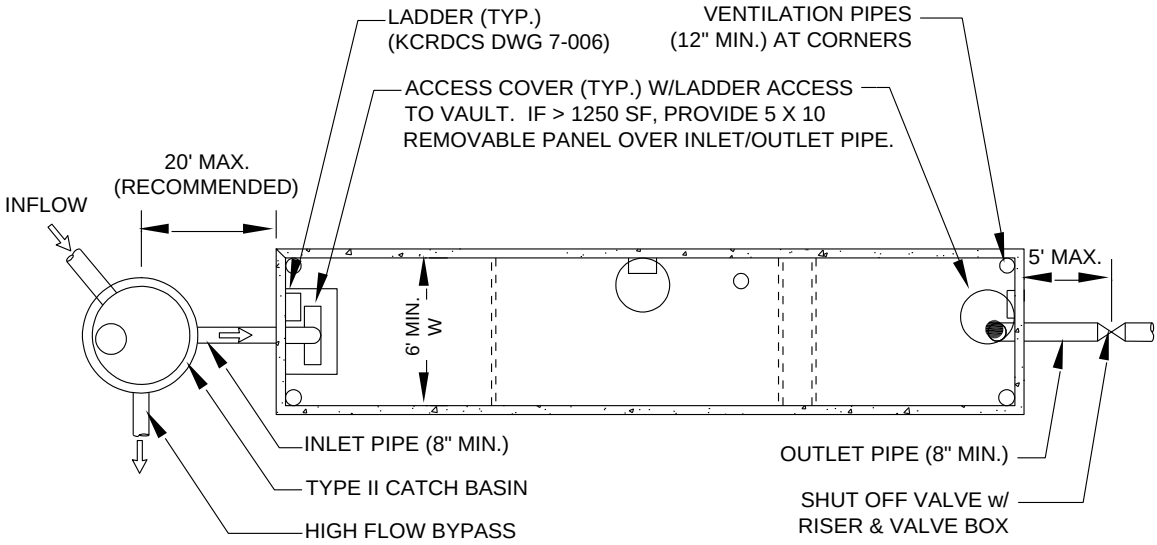

PLAN VIEW
NTS

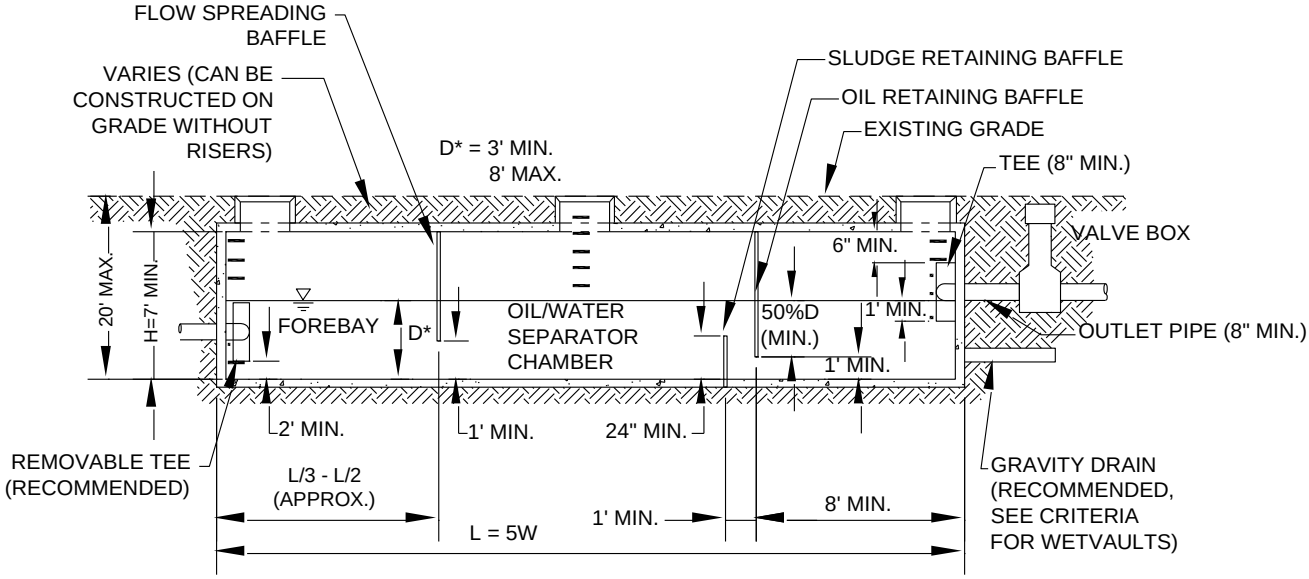

SECTION VIEW
NTS

FIGURE 6.6.2.E COALESCING PLATE OIL/WATER SEPARATOR

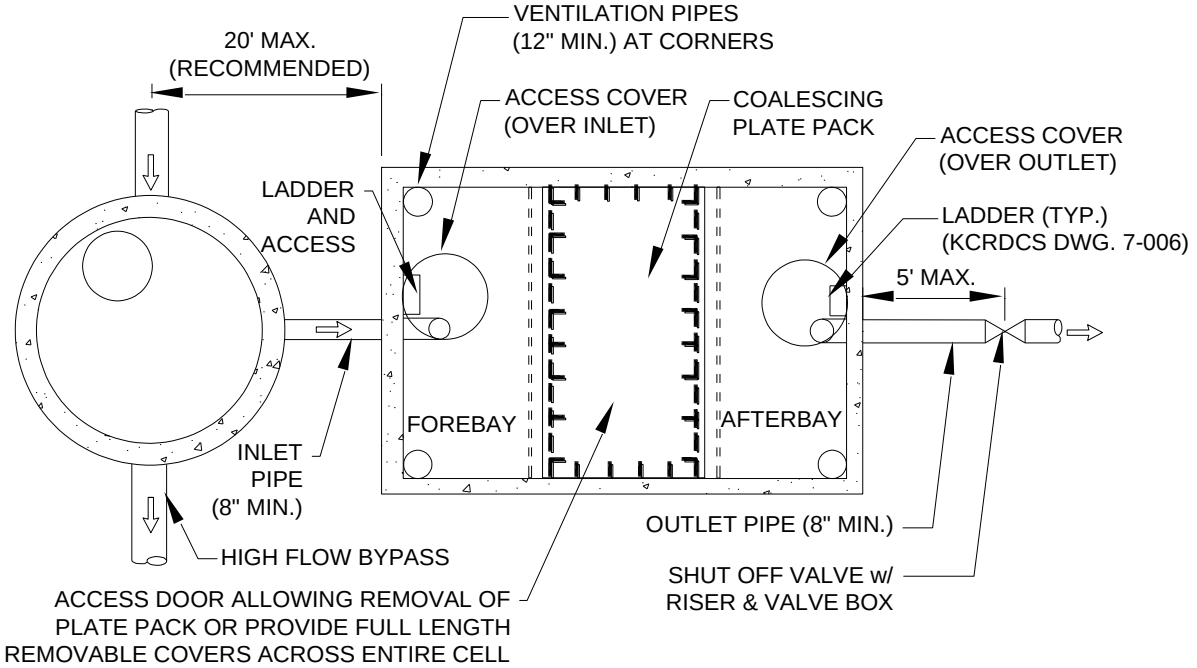

PLAN VIEW
NTS

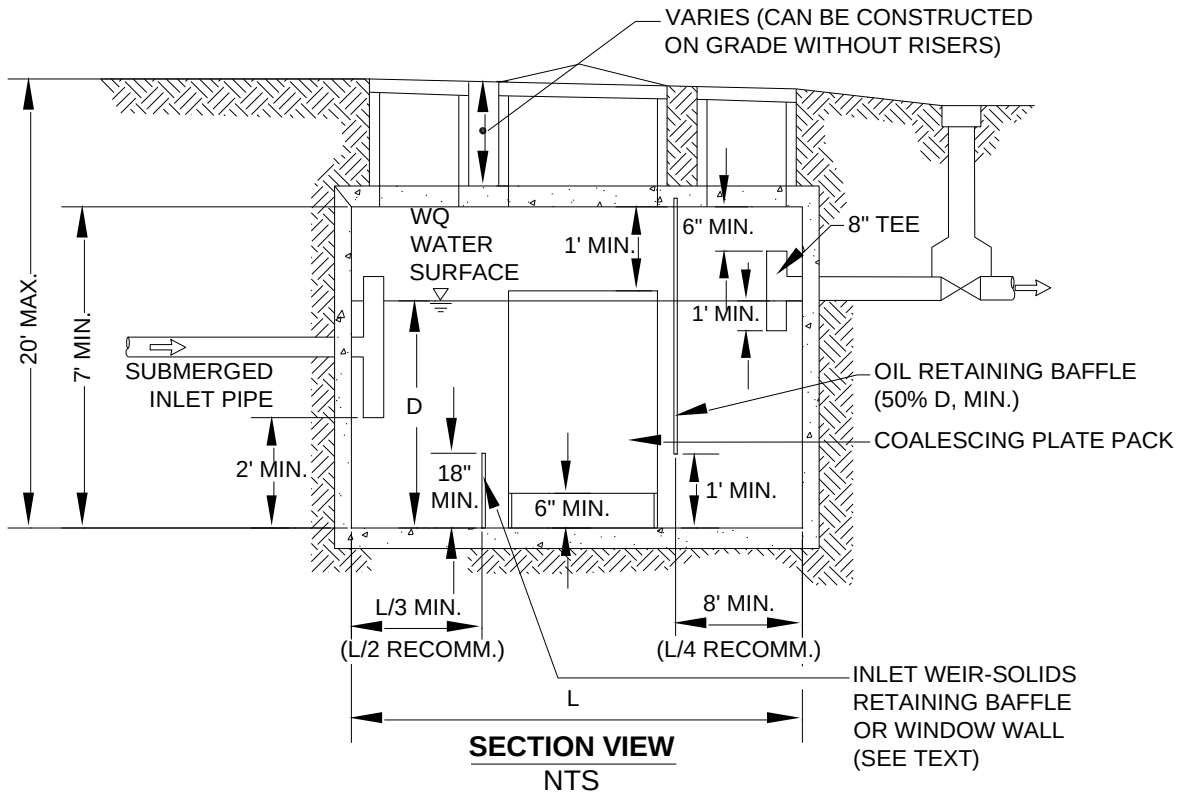

SECTION VIEW
NTS

6.7 PROPRIETARY FACILITY DESIGNS

Traditional public domain water quality treatment facilities such as wetponds and bioswales may not be feasible or appropriate in some situations due to size and space constraints or limited ability or inability to remove target pollutants[47]. Even where public domain facilities are feasible, development applicants may seek to use proprietary manufactured alternatives for economic, aesthetic, or other reasons. This is a narrower range of facilities than those referred ty to by WA Ecology as '***Emerging Technologies***'[48], which also include some public domain facilities that are in process of or have been approved through Ecology's TAPE program, e.g. WSDOT's Media Filter Drain. Proprietary designs have been and are continuing to be developed by the stormwater treatment industry.

Approval by Ecology through TAPE, CTAPE or Ecology's Approved as Equivalent process does not itself constitute approval by King County. An Experimental Design Adjustment is required for use of proprietary facilities approved by WA Ecology but not yet approved by King County.

Proprietary facilities which have been approved by both Ecology and King County appear in the Surface Water Design Manual, Reference 14-A.

6.7.1 ECOLOGY REQUIREMENTS

The Washington State Department of Ecology refers to proprietary facilities as *emerging technologies*, and more broadly includes under that designation stormwater treatment devices and some public domain facilities for which Ecology has required testing through its Technology Assessment Protocol – Ecology (TAPE) program. All proprietary facilities are *emerging technologies*, but not all *emerging technologies* are proprietary.

Proprietary systems include both permanent and construction-site treatment technologies. Many of these have not undergone complete performance testing so their performance claims cannot be verified. Some have been tested and approved by Ecology through its TAPE program or Chemical Technology Assessment Protocol Ecology (CTAPE) protocols See https://ecology.wa.gov/Regulations-Permits/Guidance-technical-assistance/Stormwater-permittee-guidance-resources/Emerging-stormwater-treatment-technologies for both TAPE and CTAPE; the latter is now covered under Construction Treatment, and Approved Technologies – Construction. A WA Ecology contact is listed at the bottom of the web page.

In addition, Ecology also has a category designated *Approved as Equivalent to Existing Technologies*, with the following description: These technologies -

> ". . . . have been approved by Ecology as equivalent to existing water quality treatment technologies that are currently listed in the 2014 Stormwater Management Manual for Western Washington and/or the 2004 Stormwater Management Manual for Eastern Washington. These technologies did not pass through the Technology Assessment Protocol – Ecology (TAPE) process."

---

[47] 'Traditional' target pollutants are TSS, heavy metals, phosphorus, and petroleum hydrocarbons ('high-use' oil, etc.). There are many TMDLs for bacteria, but no facilities approved by Ecology for bacteria treatment. Other pollutants of concern for which there are no designated facilities include but are not limited to e.g. nitrate, PAHs, and phthalates. The SWDM presents treatment trains for alkalinity (sphagnum bog wetland menu), but there is evidence that at least one of the allowed treatment trains does not work for alkalinity, hence, potential need for other options.

[48] 'Emerging' implies previously unknown, undeveloped, or unused. While some of these technologies are new, others are not, nor is their application for stormwater management necessarily new. While performance demonstration through TAPE is required for use of all proprietary facilities, it has also been required by Ecology for the public domain Ecology-approved Media Filter Drain and Compost Amended Bioswales (CABS), but not for the Ecology-approved Compost Amended Vegetated Filter Strips (CAVFS), or any of the legacy stormwater facilities, e.g. ponds, vaults, bioswales, or sand filters.

6.7.2 KING COUNTY REQUIREMENTS

Only water quality facilities listed in Chapter 6 of the SWDM, Reference 14 A or B, or approved via a Blanket Adjustment may be used for water quality treatment required per Core Requirement #8 without an Experimental Design Adjustment. Water quality facilities approved through Experimental Design Adjustments require monitoring to evaluate pollutant removal performance, operation and maintenance needs, and durability. See Chapter 1, Section 1.4 and Reference 8-F for full monitoring details.

6.7.2.1 GENERAL

The following requirements are expected to be applicable to any cartridge filter design for which an experimental adjustment is granted, or for inclusion in Reference 14-A, and may be applicable to other proprietary facilities depending on the details of those designs.

1. At a minimum, all proprietary facilities must meet design, construction, and maintenance requirements required by WA Ecology, as documented at Ecology's Emerging Technologies web site.[49] In addition:
2. Vaults shall conform to the **"Materials"** and **"Structural Stability"** requirements specified for detention vaults (see Section 5.1.3).

Presettling

Presettling is required for all cartridge media filter facilities. Presettling will likely be required for cartridge membrane filters and may be required for other proprietary filters not involving cartridges. The intent is to minimize frequency of replacement of filter media and/or vactoring. For any facilities allowed by experimental adjustment and/or included in Reference 14-A, presettling requirements will be described in detail within either the adjustment conditions or in the design criteria for the approved facility in Reference 14-A.

Note that where a cartridge filter system is used as the second or third facility in a treatment train for Enhanced Basic treatment, presettling is provided by the first facility. Use of a cartridge filter for Basic treatment or as the first facility (Basic) in a treatment train requires presettling . If used in another situation, an approved adjustment is required (see Section 1.4). See Section 6.5.1, for general presettling requirements for filtration facilities.

Access Requirements

1. **Access must be provided** by either removable panels or other King County approved accesses to allow for removal and replacement of the filter cartridges. Approved access examples are available in Reference Section 7C. Removable panels, if used, shall be at grade, have stainless steel lifting eyes, and weight no more than 5 tons per panel.
2. Access to the **inflow and outlet cells** must also be provided.
3. **Ladder access** is required when vault height exceeds 4 feet.
4. Required clear space for ladder access is a minimum two foot diameter floor-to-ceiling space at the ladder, and between the ladder and any cartridges or other vertical obstructions on the vault floor.
5. **Locking lids** shall be provided as specified for detention (see Section 5.1.3).
6. If removable panels or the Reference Section 7C access configurations are not used, corner **ventilation pipes** shall be provided, and the **minimum internal height and width** and **maximum depth** shall be met (see Section 5.1.3).

[49] https://ecology.wa.gov/Regulations-Permits/Guidance-technical-assistance/Stormwater-permittee-guidance-resources/Emerging-stormwater-treatment-technologies

Access Roads, Right of Way, and Setbacks

Same as for detention vaults (see Section 5.1.3).

Construction Considerations

Installation of a cartridge filter facility shall follow the manufacturer's recommended procedures.

Maintenance Requirements

Maintenance needs vary depending on the facility, and from ***site*** to ***site*** based on the type of land use activity, implementation of source controls, and weather conditions. The facility shall be inspected quarterly or at a frequency recommended by the supplier. Inspection and maintenance shall include the following:

1. The operation and maintenance instructions from the manufacturer shall be kept along with an inspection and maintenance log. The **maintenance log** shall be available for review by County inspectors.
2. **Routine maintenance** shall include inspecting for debris, vegetation, and sediment accumulation, flushing the underdrain, and removing or replacing media.
3. **Maintenance is required when** $^1/_4$ inch of sediment has accumulated on top of the cartridge hood, or 2 inches of sediment have accumulated on the floor. If the cartridges are in standing water more than 12 hours after rainfall has occurred, maintenance is required. The inspector should make sure that the cartridges are not submerged due to backwater conditions caused by high groundwater, plugged pipes, or high hydraulic grade lines. In other regards and if/where more stringent, maintenance is according to manufacturer's recommendations.
4. **Cartridges containing compost or other degradable material** should be replaced at a minimum every two years.
5. Media shall be disposed of in accordance with applicable regulations, including the Seattle-King County Department of Public Health solid waste regulations (Title 10) and state dangerous waste regulations (WAC 173-303). In most cases, the media may be disposed of as solid waste.

6.7.2.2 FACILITY APPROVAL

For further details on facility approval, refer to the Experimental Design Adjustment process in Chapter 1, Section 1.4.4 and Reference 8-F. The facility approval process is summarized as follows:

- Ecology may assign General Use Level Designation (GULD) or Conditional Use Level Designation (CULD) to a given facility.
- Before the County will consider adding a proprietary device or system to the list of water quality facilities approved for use without adjustments, Ecology must grant GULD approval and WLRD must determine that sufficient performance monitoring data satisfying all requirements of TAPE are met. King County approval may require that monitoring data satisfying requirements of TAPE be provided for 3 or more sites and that qualified samples equal 12 or more at each site. King County’s evaluation for inclusion of facitilies into the SWDM will also consider maintenance, operation, and durability factors. For facilities to be maintained by the county, regular maintenance frequency must be no more than once per year.
- The number of allowed installations will normally be limited to two in King County, until the County has obtained sufficient evidence indicating performance meets criteria. Failure to meet performance criteria at any one site may result in denial of any further installations.
- If King County allows an experimental design adjustment for a facility approved through TAPE/Ecology at CULD or GULD level, but the facility fails to meet TAPE performance criteria, King County may restrict further installations or testing of the same design.

- If the facility was approved at the GULD level, and fails subsequent testing during an experimental adjustment, there will be no requirement to replace the facility with an approved one.

  If the County allows an experimental adjustment for a facility approved at CULD level, typically a set aside area will be required as part of the adjustment and failure to meet TAPE criteria will require that the experimental facility be replaced with an approved facility choice from the SWDM.

- During the permitting process with DLS-Permitting, an applicant for an alternative facility may apply for an experimental design adjustment to use a device or system not listed in the SWDM. There is no guarantee that an experimental adjustment will be granted, but if one is, monitoring will be required. All TAPE monitoring requirements and criteria are applicable. King County does not pay for this monitoring. The cost of monitoring commercial products is covered by the applicant and/or the facility vendor according to their agreement. The cost of testing public domain devices or systems for which an experimental adjustment is requested is borne by the applicant.

6.7.2.3 DIFFERENCES BETWEEN COUNTY MAINTAINED AND PRIVATELY MAINTAINED PROPRIETARY FACILITIES

- The County will not consider adoption of facilities for public maintenance which are likely to require maintenance more frequently than annually. A privately maintained facility may have an inspection/maintenance cycle as short as quarterly.
- Where the County will be taking over maintenance responsibilities from a developer, the County may consider maintenance costs in deciding which facilities to allow.