EBRIGHT CREEK ENHANCEMENT PROJECT

City of Sammamish Washington

December 21, 2012

Prepared by:

DAVID EVANS AND ASSOCIATES INC.

Ebright Creek Enhancement Plan

Background and Purpose

The City of Sammamish (CITY) is undertaking kokanee salmon (*Oncorhynchus nerka*) restoration on Ebright Creek. This project will complement other on-going work to restore and enhance habitat, reduce and control exotic vegetation, coordinate with recently completed and potential future nearby fish passage improvement projects, and work with property owners to satisfy other related restoration and enhancement needs.

The extent of the total project will reach from the mouth of Ebright Creek at Lake Sammamish upstream approximately 1,000 feet to a former fish passage barrier at a private residence (**Exhibit 1**). The project area varies in width from about 50 feet up to 150 feet from the edge of the stream. The site is under two ownerships, one on either side of East Lake Sammamish Parkway (ELSP). King County is the current lease-holder for the East Lake Sammamish Trail and the CITY is responsible for ELSP.

This technical report describes existing stream conditions, recent work completed, and a plan for additional comprehensive enhancements. The additional detail on enhancements will be established when developing project success factors and goals. Final restoration design and execution would be completed under a separate scope of work and budget.

Exhibit 1. Project Vicinity

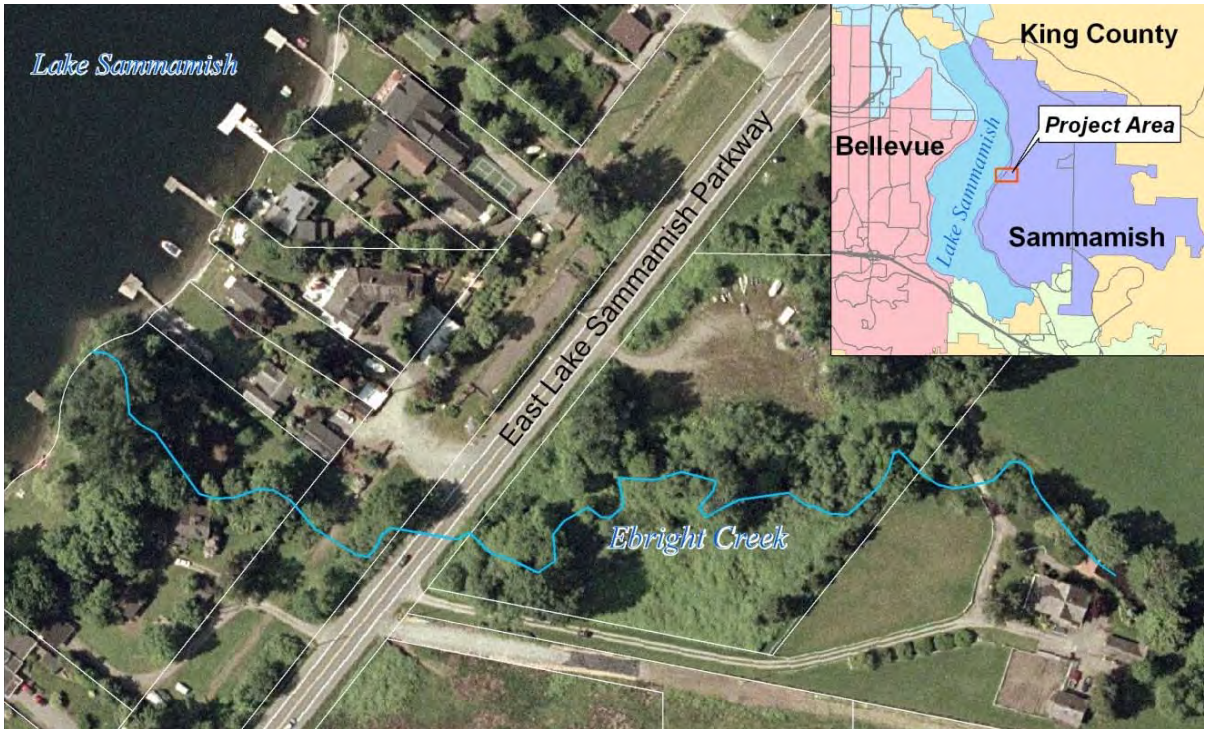

Site Description

Ebright Creek is the main channel for the Thompson Basin, draining east to west from the Sammamish Plateau into Lake Sammamish. This approximately 1.3-square-mile watershed contains an area of mixed residential and institutional uses in the upper watershed and low intensity development in the lower, steeply-sloped areas. The upper wetlands and stream corridors are relatively intact for this moderately developed city, and the basin has a relatively low impervious area, estimated around eight percent.

The geology of the Sammamish Plateau was mapped by the U.S. Geological Survey (USGS) (USGS 2006) and shows a geologic sequence of layered Vashon tills and outwashes with an underlying layer of Pre-Vashon undifferentiated unconsolidated deposits (Qpf) (USGS 2006). The lower reach of Ebright Creek cuts through these Qpf deposits (Sammamish 2011), which is also mapped as a landslide hazard area (Sammamish 2011). The entire project site is mapped as "Mass Wastage Deposits (Qmw)," formed by the erosion of the steep slopes above the site, with soil and landside debris typically up to 10 feet thick (Sammamish 2011). The narrow area between the ELSP and Lake Sammamish is mapped as Alluvium (Qal). The geologic setting in the project area—a stream flowing through landslide hazard areas above a geologically recent colluvium—has a strong influence on the geomorphology of the channel through the project area.

The stream flows through a second-growth forest above the project site through a relatively steep ravine on the side of the plateau. As the stream crosses the project site, it passes through a mixed use area consisting of a single-family residence, pasture, and areas with both native and non-native vegetation. The forest area surrounding the stream is predominately early colonizers such as red alder (*Alnus* rubra) and black cottonwood (*Populus trichocarpa*). After crossing the ELSP, the stream continues through a narrow, shallow ravine to Lake Sammamish. The land uses adjacent to the stream riparian corridor are single-family residential and open space.

Stream habitat through the project reach on the east side of ELSP is in relatively good condition in that the stream has not been extensively ditched or channelized, native riparian vegetation and large woody debris are present, and overall habitat complexity is relatively high for a stream in an urban environment. Adjacent land use activities that have degraded stream habitat conditions are primarily associated with cleared land for pasture and addition of fill material for site access. Native and non-native vegetation have become established in previously disturbed areas, while open pasture is maintained in others.

The stream channel slope through the project area varies between 1.2 and 4.5 percent (**Attachment 1**) with an average slope of 2.7 percent from the replaced culvert to Lake Sammamish. The hydraulic model prepared for the project reach gives a range of 1.0 to 3.4 feet per second average channel velocity at baseflow and range of 1.3 to 4.6 feet per second at the 2-year flow event (**Appendix A**).

Hydrologic conditions for the project reach were determined in the Thomson Sub-Basin Plan (Sammamish 2011) and are summarized in **Exhibit 2**.

Exhibit 2. Ebright Creek Flow Magnitude and Frequency

Return Period	Flow (cfs)
Baseflow	6
2-year	16
5-year	26
10-year	36
25-year	43
50-year	45
100-year	51

Anecdotal hydrologic conditions observed by the project team in the fall of 2012, with its notably long period with no significant rain (early July to mid-October), indicated a robust low flow (**Exhibit 3**) and saturated soils in adjacent riparian areas. The unique geologic and hydrogeologic conditions in the basin area appear to support a healthy low flow regime.

Exhibit 3. Baseflow at the End of an Extended, Dry Summer

A hydraulic model of the project reach was developed using the Hydrologic Engineering Center's River Analysis System (HEC-RAS) version 4.1, developed by the Army Corps of Engineers. Average flow depths were estimated for the baseflow and the 2-, 5-, 10-, 25-, 50-, and 100-year return frequency flows. The structural crossings included in the model are the new box culvert at the upstream end of the project,

the older driveway bridge, the twin culverts under ELSP, and the twin culverts under the East Lake Sammamish Trail (Trail). The water depths for the listed flows are shown in **Exhibit 4**. The water surface profile is shown on **Exhibit 5**. The model summary results are provided in **Appendix A**.

Exhibit 4. Ebright Creek Flow Magnitude and Frequency

Return Period	Flow (cfs)	Flow Depth (ft)
Baseflow	6	0.6
2-year	16	0.9
5-year	26	1.3
10-year	36	1.5
25-year	43	1.7
50-year	45	1.7
100-year	51	1.9

Exhibit 5. Water Surface Profiles from HEC-RAS Model

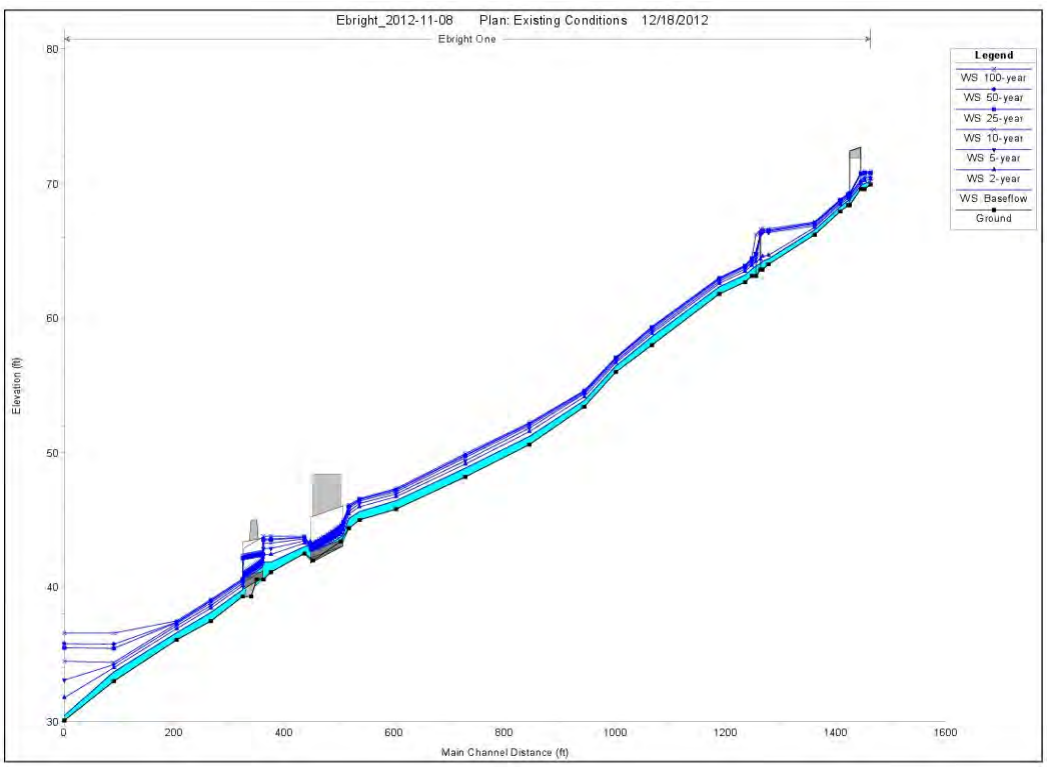

The hydraulic model indicates a flow restriction at the upper driveway bridge, which could cause flows to overtop or bypass the bridge. The two downstream culverts both restrict flow and sediment movement, but not so much as to cause overtopping of the roadway or trail. The flow constriction at these culverts may also hinder fish passage due to high velocities during storm flow.

Enhancement Goals and Approaches

Through the project area, Ebright Creek has many positive habitat attributes that provide spawning and rearing habitat for the Kokanee runs using the project area. The primary project goal is to provide enhancement measures that will continue to support and maintain diverse habitat for Kokanee.

The approach for the site, in general order of priority, is to:

1. Implement active measures to enhance, replenish, rehabilitate, repair, upgrade, and supplement the stream corridor;
2. Seek opportunities to make changes to the existing built environment;
3. Do no harm or that could diminish or reduce existing attributes or preclude future actions;
4. Support a close relationship with land owners for future land protection; and
5. Identify and protect the project area from future anticipated threats.

Completed Work

Several important elements of the project area improvements have been implemented in the past several months. An 18-inch culvert at the upper end of the project area identified as a known barrier to fish passage has been removed and replaced with a 14-foot box culvert (**Exhibit 6**). Recent observations of this fall's Kokanee run have found large numbers of fish upstream of the culvert (FWS 2012) in the high-quality habitat through the intact second-growth forest.

Exhibit 6. Fish Barrier Replaced by Propery Owner

A vegetation management plan has also been developed for the removal of noxious vegetation and infill followed by replanting the project area riparian zone (**Attachments 2a and 2b**). Phase One of the plan, the upstream portion, was completed under a contract with Earthcorps (**Exhibit 7**). Additional before and after pictures at ten photo points are shown in **Appendix B**. Phase Two of the Vegetation Management Plan is intended to be implemented in 2013, but has not yet been funded.

Exhibit 7. Areas Cleared and Planted by Earthcorps

Proposed Enhancement Elements

A conceptual project area enhancement plan was developed to define potential projects for future implementation. Some of the projects are interdependent but in general can be phased and implemented as funding is available. The individual project elements are shown on **Exhibits 8a and 8b** and described below with corresponding numbers. The overall planting and Vegetation Management Plan (**Attachments 2a and 2b**) would be applied to and coordinated with individual enhancement elements.

1. Bridge and Culvert Replacements

There are four stream crossings in the project area. An 18-inch culvert at the upstream end of the project area has been replaced by a new 14-foot box culvert. The next crossing downstream is a small, timber driveway bridge (**Exhibit 9**). This bridge appears to cause a hydraulic restriction at high flows, in large part due to very low clearance over the stream. Proposed alternatives to replace the bridge are shown on **Attachment 3a**. The benefit to the stream would be reduced scour at the bridge, improved habitat under the crossing, and maintaining flood waters in the stream corridor.

The two 36-inch culverts under ELSP show a partial hydraulic restriction to fish passage, although there is no apparent flooding or capacity problem. In addition, the culvert is not well-aligned with the stream path and there is a sharp bend at each end of the culvert. The fourth crossing is another set of two 36-inch culverts under King County's East Lake Sammamish Trail. Like those under ELSP, these culverts also restrict flow and sediment movement and may be partial fish barriers during high flow. The culverts at both crossings are proposed for replacement.

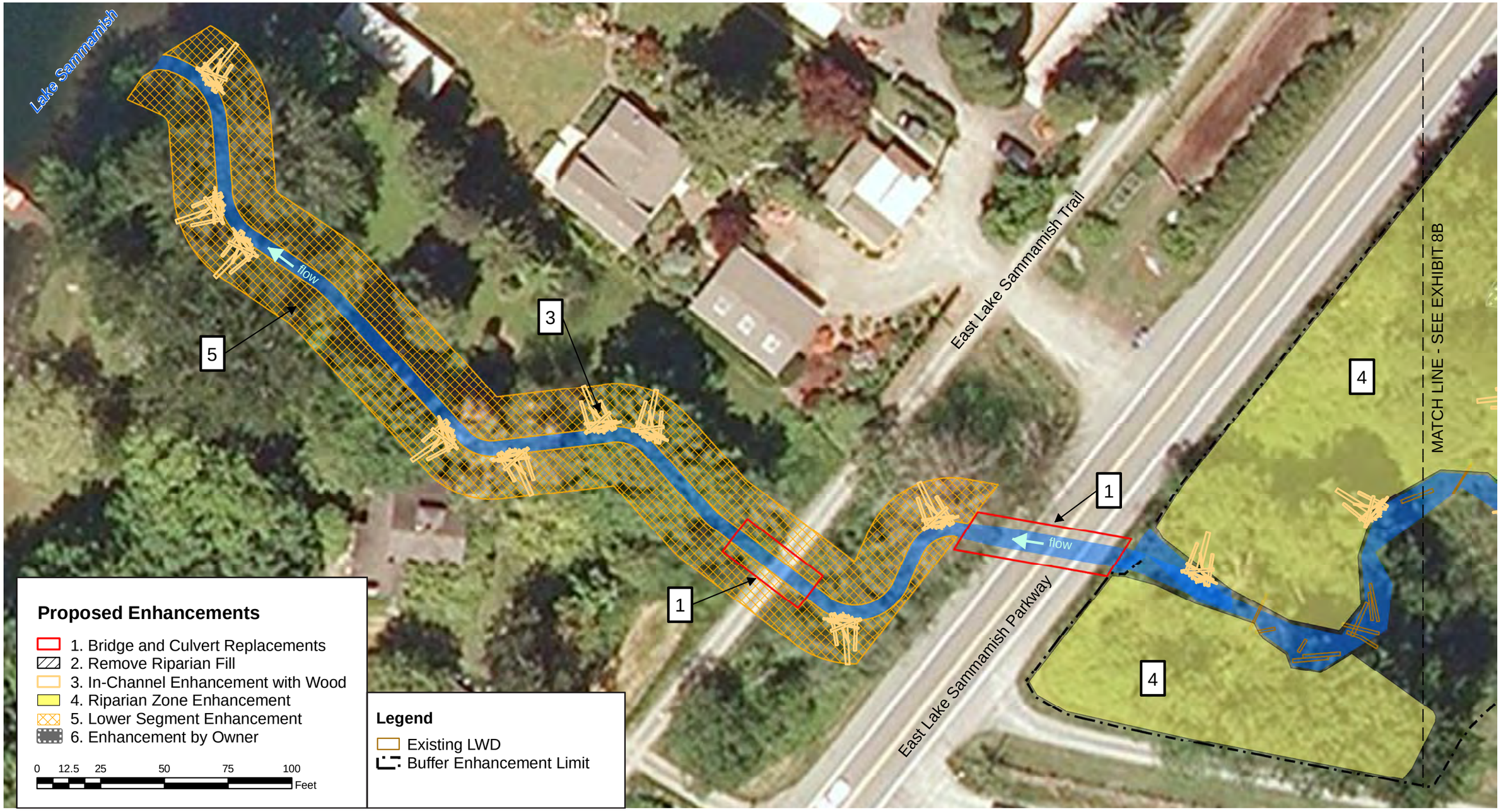

DAVID EVANS AND ASSOCIATES INC.

City of Sammamish

Exhibit 8a

Phase Two Enhancement Plan

Ebright Creek Enhancement Project

City of Sammamish

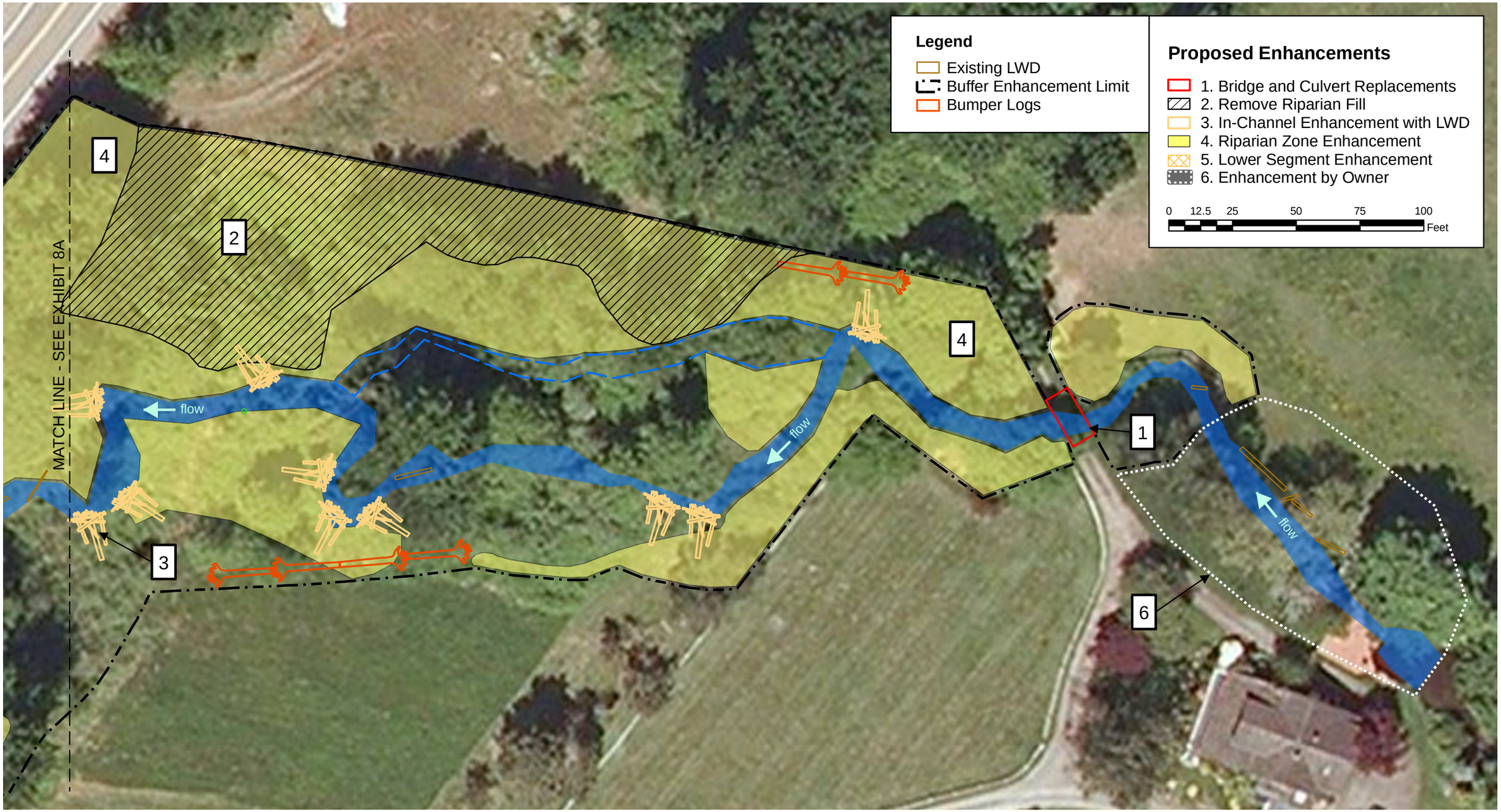

DAVID EVANS AND ASSOCIATES INC.

City of Sammamish

Exhibit 8b

Phase Two Enhancement Plan

Ebright Creek Enhancement Project

City of Sammamish

Exhibit 9. Upper Driveway Bridge that Currently Restricts High Flows

There are three alternatives for proposed replacement that are all shown on **Attachment 3b**. The first is a single 14-foot gravel-bottom culvert for both crossings, realigned to improve the inlet and outlet alignments with the stream course and reduce sharp bends. The additional benefit of this alternative is new stream habitat in the culvert and a single, optimal culvert alignment. The second alternative would use the same alignment but maintain an open segment between the two segments. The third alternative would be two culvert segments but in alternate preferred alignments as shown in **Attachment 3b**. The benefits of alternatives 2 and 3 would be more open stream habitat (in the segment between the culverts) and a potential area where migrating and spawning salmon could be observed from the trail. However, the stream segment between the culverts could be constrained by lack of area and habitat benefits would be limited.

2. Remove Riparian Fill

A portion of the riparian zone on the north side of the stream was apparently filled in the past. Pieces of construction debris were found during the soil hydrology investigation. The proposed enhancement is to remove the area of fill and restore grade and riparian plants. The benefit of the enhancement would be increased riparian wetland-type habitat and additional connected floodplain area. A proposed grading plan is shown on **Attachments 4a and 4b**. Soil enhancement and planting are shown on **Attachments 2a and 2b**.

3. Enhance In-Channel Habitat Complexity with LWD

The complexity of stream habitat between the driveway bridge and ELSP is a good mix of pools and riffles with appropriate sinuosity and large woody debris (LWD). There is some LWD from a variety of

earlier placements, many of which were placed during a King County Enhancement project in the mid-90s. LWD is defined as pieces exceeding 4 inches in diameter and 6.5 feet in length (Fox, et al. 2007). Most of the structures are still and in place and providing the expected channel complexity. However, they are all of the same approximate age and are beginning to breakdown. The existing distribution of LWD for the 770-foot reach between ELSP and the driveway bridge is 28 pieces or 3.6 pieces per 100 feet.

The proposed enhancement is to supplement the reach between the upper driveway bridge and ELSP (**Attachments 5a and 5b**) with additional LWD. The target reference for streams of this size in Western Washington is 12 pieces per 100 feet or 68 pieces for this reach (Fox, et al. 2007). Existing LWD count is about 28 pieces, therefore about 40 pieces of LWD would be added. LWD will be placed in logjam clusters to mimic natural conditions (**Attachment 5c**). Due to the relatively small stream size wood pieces would be anchored by burial or interlocking pieces; no anchors would be used (**Exhibit 10**). The benefit of this enhancement would be new stream structure to further diversify habitat and provide additional cover and pool formation, bank stabilization, and LWD recruitment to replace the older structures.

Exhibit 10. Example of Installed Logjam

4. Riparian Enhancement and Buffers

The vegetation in the stream's riparian area project area has some mature cottonwood, alder, and pacific willow, but lacks conifers. Much of the understory is degraded by invasive species (e.g.,

Himalayan blackberry). The proposed Vegetation Management Plan will upgrade and enhance project area habitat (**Attachment 2a and 2b**). These proposed enhancements will also provide buffers and exclusion zones between the adjacent pasture and stream. The benefit of the riparian planting is to enhance native plant species richness by 1) removing invasive species monocultures, 2) planting 4,068 native shrubs to enhance the riparian understory, and 3) planting 663 conifers to initiate succession.

The stream channel, due to its profile and sediment budget, has been actively braiding and meandering. There is an interest to keep the stream with the defined project corridor. Additional wood placed in strategic locations in the channel migration zone are proposed to arrest and control additional movement in the event that the stream begins significant meandering toward the project edges. A series of partially buried logs will be placed to provide channel structure and bank protection if the channel movement is significant. The structures will provide microhabitat benefits if not needed for stream bank protection. The benefit of this enhancement is to provide reasonable control and protection of the stream corridor for the cooperating property owner.

5. Lower Segment Restoration

The stream segment located downstream of ELSP is somewhat incised and channelized. The riparian cover is good, although it includes many non-native plants and invasive species. Two small pedestrian bridges are constructed well above the peak flood flows. The property is under private ownership. The proposed enhancement is to reshape the channel cross section by laying back the steep banks and reestablishing a floodplain riparian zone with 8:1 benches as can be seen in **Attachment 6**. The benefit would be to provide more diverse channel habitat and potentially improve lower reach spawning by modifying stream energy and reducing scouring and incision.

6. Upper Stream Enhancement

The stream channel near the replaced culvert is currently un-vegetated following construction of the new culvert. (**Exhibit 11**). The owner is preparing a landscape plan for this area to re-vegetate the streambank. The benefit of this restoration is to enhance stream and riparian vegetation while maintaining a plan that is consistent with the owner's use of the area.

Exhibit 11. Current Channel Conditions Downstream of the Newly Replaced Culvert

Additional considerations and Next Steps

The proposed enhancements will require additional funding for implementation. Final designs and permitting are also required for the proposed measures with the exception of the planting enhancement plans. Measures should be considered to further protect the land from direct development impact, such and conservation easements or land purchase. Other upper watershed development should apply appropriate stormwater controls to limit changes in basin hydrology. Roadway discharges with poor water quality should be controlled when feasible.

References

(Fox, et. al 2007). 2006. A Regional and Geomorphic Reference for Quantities and Volumes of Insteam Wood in Unmanaged Forested Basins of Washington State. By Martin Fox and Susan Bolton.

FWS (U.S. Fish & Wildlife Service). 2012. Website Report. http://www.fws.gov/wafwo/LakeSammamishKokanee.html

Sammamish, City of. 2011. Thompson Sub-basin Plan. Prepared by Parametrix, Inc. September.

USGS (U.S. Geologic Survey). 2006. Geologic Map of the Issaquah 7.5' Quadrangle, King County, Washington by Derek B. Booth, Timothy J. Walsh, Kathy Goetz Troost, and Scott A. Shimel.

Appendix A

Hydraulic Study

DAVID EVANS
AND ASSOCIATES INC.

MEMORANDUM

DATE: December 5, 2012

TO: Addressee
Addressee's Company and Address

FROM: Karen Comings

SUBJECT: **Ebright Creek Hydraulic Modeling**

PROJECT: COSA00000016 – Ebright Creek

COPIES:

A hydraulic model of Ebright Creek was prepared using the Hydrologic Engineering Center's River Analysis System (HEC-RAS) version 4.1 developed by the Army Corps of Engineers. The model begins at the creek's mouth into Lake Sammamish and extends 1,460 feet upstream through four structural crossings (e.g. bridges or culverts) to about 20 feet above the upstream most culvert.

Flows used in the model were obtained from the Thompson Sub-basin Plan (Sammamish 2011) and are presented in **Exhibit 1**.

Exhibit 1. Ebright Creek Flow Magnitude and Frequency

Return Period	Flow (cfs)
2-year	16
5-year	26
10-year	36
25-year	43
50-year	45
100-year	51

The primary purpose of this model was to determine existing flow patterns along this reach of Ebright Creek, and identify concerns related to existing structures. The existing conditions of the four structural crossings in this reach are as follows:

1. *Upstream Culvert*. The culvert furthest upstream has recently been replaced by a 14-foot-wide concrete box culvert that meets current standards for fish passage and does not restrict flow or sediment movement (**Exhibit 2**).

Exhibit 2. This concrete box culvert replaced a fish barrier and now provides unrestricted passage for water, sediment, and aquatic life.

2. *Driveway Bridge*. The driveway bridge is about 175 feet downstream of the Upstream Culvert. This bridge is an older wooden bridge supported in the center by a log resting on a wooden footing (**Exhibit 3**). This bridge is fish passable; however, the low chord is about a foot and a half from the channel bed causing backwater during high flow. The upstream banks in this area are relatively low so that backwater during high flow can flood open driveway sections of the property.

Exhibit 3. This Driveway Bridge has insufficient clearance for high flows.

3. *East Lake Sammamish Parkway Culvert*. From the Driveway Bridge, the creek flows for approximately 750 feet through an area with forested buffer to the next culvert, which is under East Lake Sammamish Parkway. This culvert is a twin set of 36-inch concrete pipes (**Exhibit 4**). This crossing is fish passable, but the hydraulic capacity is small for the channel and bedload sediment is restricted from migrating downstream. The channel banks in this area are deep enough to contain this backwater so flooding is not a concern.

Exhibit 4. One of the twin culverts under East Lake Sammamish Parkway.

4. *East Lake Sammamish Trail Culvert*. The culvert furthest downstream is another set of two 36-inch culverts that cross under an old railway bed now being used a public trail. Between this crossing and the crossing under East Lake Sammamish Parkway there is roughly 90 feet of open channel. The culverts at this crossing are fish passable, but are small for this stream and cause backwater during high flow. The channel banks in this area are deep enough to contain this backwater so flooding is not a concern.

Modeling results indicate that the Driveway Bridge, the East Lake Sammamish Parkway Culvert, and the East Lake Sammamish Trail Culvert present varying degrees of obstruction to high flows, with the Driveway Bridge increasing the risk of local flooding. While all of these structures are fish passable the higher velocities created by flow constriction and backwater conditions may limit fish movement during high flows.

Replacing these three crossings with structures that meet current design standards would improve passage for fish and other aquatic species, improve the passage of storm flow, reduce the risk of flooding, and allow for normal transportation of sediment through the channel.

The Driveway Bridge can be replaced with either another bridge or a culvert. Either of these structures would resolve the flooding issue at this crossing. Of the two options, the bridge would provide a larger opening under the driving surface. Both options would occupy essentially the same footprint as the existing bridge.

The culverts under East Lake Sammamish Parkway and East Lake Sammamish Trial are close enough to each other that they should be considered in conjunction. The first option is to replace the culverts in their current locations, replacing the twin pipes with a 14-foot concrete box culvert. Currently, the two crossings are not in alignment, so the channel must bend immediately downstream of the road culvert and immediately upstream of the trail culvert. Therefore, the second option is to modify the alignment of the culverts so that they align with each other and remove the bends between the two crossings. The culverts proposed for both crossings are identical14-foot concrete box culverts. Because these culverts are the same size, a third option is proposed whereby one 14-foot concrete box culvert is used to span both the road and the trail as a single crossing. The opening of the proposed culvert is large enough to contain the full width of the creek, which means that fish migrating up this channel would not require burst-speed to cross the culvert. For this reason, the length of this combined culvert is not expected to hinder fish passage.

A summary table of modeling results including flow elevations and velocities can be found in Attachment A.

References

Sammamish, City of. 2011. Thompson Sub-basin Plan. Prepared by Parametrix, Inc. September.

Attachments/Enclosures: modeling output tables and graphs

Initials: KJCO

File Name: P:\c\COSA00000016\0600INFO\EP\EP30 Water Resources\Hydraulic Model\Summary Memo.docx

Attachment A

Model output tables and profile charts

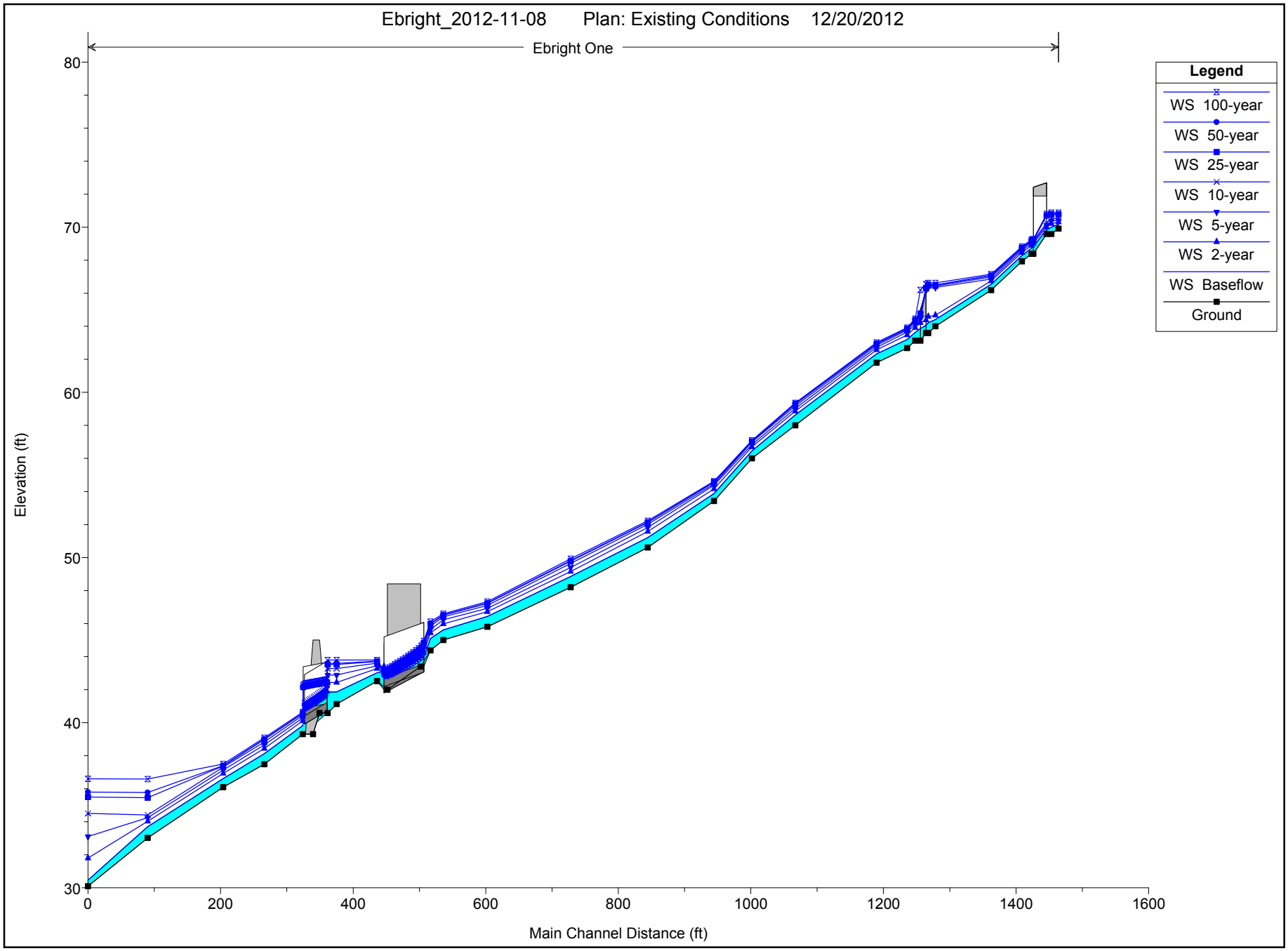
Ebright_2012-11-08 Plan: Existing Conditions 12/20/2012
Ebright One
Legend
WS 100-year
WS 50-year
WS 25-year
WS 10-year
WS 5-year
WS 2-year
WS Baseflow
Ground
Elevation (ft)
80
70
60
50
40
30
0
200
400
600
800
1000
1200
1400
1600
Main Channel Distance (ft)

HEC-RAS Plan: Existing River: Ebright Reach: One

Reach	River Sta	Profile	Q Total	Min Ch El	W.S. Elev	Crit W.S.	E.G. Elev	E.G. Slope	Vel Chnl	Flow Area	Top Width	Froude # Chl
			(cfs)	(ft)	(ft)	(ft)	(ft)	(ft/ft)	(ft/s)	(sq ft)	(ft)	
One	967.42	Baseflow	6.00	69.92	70.17	70.17	70.25	0.033501	2.23	2.69	17.43	1.00
One	967.42	2-year	16.00	69.92	70.32	70.32	70.46	0.027952	3.03	5.29	18.94	1.01
One	967.42	5-year	26.00	69.92	70.43	70.43	70.62	0.024921	3.49	7.46	19.76	1.00
One	967.42	10-year	36.00	69.92	70.54	70.52	70.75	0.020851	3.70	9.73	20.58	0.95
One	967.42	25-year	43.00	69.92	70.78	70.58	70.91	0.007948	2.87	14.96	22.34	0.62
One	967.42	50-year	45.00	69.92	70.81	70.60	70.94	0.007692	2.89	15.59	22.54	0.61
One	967.42	100-year	51.00	69.92	70.89	70.64	71.03	0.007020	2.93	17.43	23.05	0.59
One	956.61	Baseflow	6.00	69.60	70.01	69.87	70.03	0.004496	1.20	5.00	18.22	0.40
One	956.61	2-year	16.00	69.60	70.22	70.02	70.27	0.005024	1.78	8.97	19.54	0.46
One	956.61	5-year	26.00	69.60	70.39	70.13	70.46	0.004807	2.10	12.35	20.20	0.47
One	956.61	10-year	36.00	69.60	70.54	70.23	70.62	0.004627	2.34	15.39	20.78	0.48
One	956.61	25-year	43.00	69.60	70.78	70.29	70.85	0.002706	2.09	20.57	21.89	0.38
One	956.61	50-year	45.00	69.60	70.81	70.31	70.88	0.002713	2.12	21.18	22.03	0.38
One	956.61	100-year	51.00	69.60	70.89	70.36	70.96	0.002740	2.22	22.97	22.50	0.39
One	940		Bridge									
One	926.94	Baseflow	6.00	68.40	68.74	68.74	68.83	0.030125	2.43	2.47	13.04	0.98
One	926.94	2-year	16.00	68.40	68.90	68.90	69.06	0.028378	3.16	5.06	17.11	1.03
One	926.94	5-year	26.00	68.40	69.03	69.03	69.23	0.025410	3.59	7.24	18.65	1.01
One	926.94	10-year	36.00	68.40	69.12	69.12	69.37	0.023591	3.99	9.04	18.82	1.01
One	926.94	25-year	43.00	68.40	69.18	69.18	69.46	0.022561	4.22	10.21	18.92	1.01
One	926.94	50-year	45.00	68.40	69.20	69.20	69.48	0.022458	4.29	10.52	18.94	1.01
One	926.94	100-year	51.00	68.40	69.25	69.25	69.56	0.021875	4.47	11.45	19.01	1.01
One	912.33	Baseflow	6.00	67.93	68.29	68.29	68.38	0.031360	2.40	2.50	13.82	0.99
One	912.33	2-year	16.00	67.93	68.46	68.46	68.62	0.026736	3.19	5.01	15.97	1.00
One	912.33	5-year	26.00	67.93	68.58	68.58	68.80	0.024860	3.71	7.01	16.82	1.01
One	912.33	10-year	36.00	67.93	68.69	68.69	68.95	0.023267	4.10	8.78	17.22	1.01
One	912.33	25-year	43.00	67.93	68.75	68.75	69.04	0.022449	4.32	9.95	17.49	1.01
One	912.33	50-year	45.00	67.93	68.77	68.77	69.07	0.022203	4.38	10.27	17.56	1.01
One	912.33	100-year	51.00	67.93	68.83	68.83	69.15	0.021260	4.52	11.28	17.78	1.00
One	865.79	Baseflow	6.00	66.20	66.54	66.51	66.62	0.017932	2.22	2.70	10.96	0.79
One	865.79	2-year	16.00	66.20	66.75	66.70	66.90	0.017984	3.14	5.09	12.23	0.86
One	865.79	5-year	26.00	66.20	66.85	66.85	67.11	0.023400	4.05	6.42	12.79	1.01
One	865.79	10-year	36.00	66.20	66.99	66.99	67.29	0.021863	4.41	8.16	13.54	1.00
One	865.79	25-year	43.00	66.20	67.07	67.07	67.40	0.021265	4.63	9.28	14.00	1.00

HEC-RAS Plan: Existing River: Ebright Reach: One (Continued)

Reach	River Sta	Profile	Q Total	Min Ch El	W.S. Elev	Crit W.S.	E.G. Elev	E.G. Slope	Vel Chnl	Flow Area	Top Width	Froude # Chl
			(cfs)	(ft)	(ft)	(ft)	(ft)	(ft/ft)	(ft/s)	(sq ft)	(ft)	
One	865.79	50-year	45.00	66.20	67.09	67.09	67.43	0.021112	4.69	9.59	14.12	1.00
One	865.79	100-year	51.00	66.20	67.15	67.15	67.52	0.020722	4.85	10.51	14.48	1.00
One	782.00	Baseflow	6.00	64.00	64.41	64.41	64.55	0.036079	3.04	1.97	6.81	1.00
One	782.00	2-year	16.00	64.00	64.68	64.68	64.93	0.031505	4.07	3.93	7.74	1.01
One	782.00	5-year	26.00	64.00	66.35	64.88	66.37	0.000503	1.13	27.76	44.51	0.15
One	782.00	10-year	36.00	64.00	66.44	65.06	66.47	0.000765	1.45	31.84	45.46	0.19
One	782.00	25-year	43.00	64.00	66.50	65.16	66.54	0.000952	1.65	34.32	46.00	0.21
One	782.00	50-year	45.00	64.00	66.51	65.19	66.55	0.001005	1.70	35.01	46.15	0.22
One	782.00	100-year	51.00	64.00	66.63	65.28	66.67	0.000964	1.74	40.58	47.39	0.22
One	771.15	Baseflow	6.00	63.60	64.23	64.04	64.28	0.008477	1.90	3.15	7.36	0.51
One	771.15	2-year	16.00	63.60	64.59	64.35	64.69	0.008835	2.46	6.52	10.69	0.55
One	771.15	5-year	26.00	63.60	66.35	64.55	66.36	0.000243	0.82	36.74	37.73	0.11
One	771.15	10-year	36.00	63.60	66.45	64.69	66.46	0.000388	1.06	40.22	37.97	0.14
One	771.15	25-year	43.00	63.60	66.50	64.78	66.52	0.000501	1.22	42.31	38.23	0.16
One	771.15	50-year	45.00	63.60	66.52	64.81	66.54	0.000535	1.26	42.89	38.33	0.16
One	771.15	100-year	51.00	63.60	66.63	64.88	66.66	0.000549	1.32	47.48	39.36	0.16
One	760		Bridge									
One	751.52	Baseflow	6.00	63.13	63.63	63.63	63.79	0.036204	3.15	1.90	6.28	1.01
One	751.52	2-year	16.00	63.13	63.92	63.92	64.16	0.031503	3.93	4.07	8.69	1.01
One	751.52	5-year	26.00	63.13	64.12	64.12	64.42	0.029494	4.35	5.97	10.36	1.01
One	751.52	10-year	36.00	63.13	64.28	64.28	64.62	0.028169	4.68	7.69	11.55	1.01
One	751.52	25-year	43.00	63.13	64.37	64.37	64.74	0.027398	4.88	8.81	12.17	1.01
One	751.52	50-year	45.00	63.13	64.40	64.40	64.78	0.027323	4.94	9.11	12.33	1.01
One	751.52	100-year	51.00	63.13	64.47	64.47	64.87	0.026739	5.10	10.00	12.68	1.01
One	739.27	Baseflow	6.00	62.68	63.20	63.11	63.26	0.013391	1.98	3.03	9.59	0.62
One	739.27	2-year	16.00	62.68	63.48	63.33	63.59	0.012911	2.72	5.95	12.76	0.66
One	739.27	5-year	26.00	62.68	63.65	63.51	63.81	0.013134	3.25	8.50	16.43	0.70
One	739.27	10-year	36.00	62.68	63.78	63.65	63.99	0.013841	3.74	10.74	19.13	0.74
One	739.27	25-year	43.00	62.68	63.85	63.74	64.09	0.014571	4.06	12.16	20.67	0.77
One	739.27	50-year	45.00	62.68	63.87	63.76	64.12	0.014716	4.14	12.57	21.06	0.77
One	739.27	100-year	51.00	62.68	63.92	63.83	64.21	0.015237	4.39	13.75	22.18	0.79
One	692.92	Baseflow	6.00	61.80	62.33	62.29	62.44	0.024860	2.65	2.30	8.98	0.84
One	692.92	2-year	16.00	61.80	62.58	62.57	62.76	0.025221	3.52	5.35	15.42	0.91

HEC-RAS Plan: Existing River: Ebright Reach: One (Continued)

Reach	River Sta	Profile	Q Total	Min Ch El	W.S. Elev	Crit W.S.	E.G. Elev	E.G. Slope	Vel Chnl	Flow Area	Top Width	Froude # Chl
			(cfs)	(ft)	(ft)	(ft)	(ft)	(ft/ft)	(ft/s)	(sq ft)	(ft)	
One	692.92	5-year	26.00	61.80	62.72	62.72	62.97	0.025693	4.16	7.83	18.75	0.95
One	692.92	10-year	36.00	61.80	62.85	62.85	63.14	0.024287	4.60	10.38	21.88	0.96
One	692.92	25-year	43.00	61.80	62.93	62.93	63.24	0.023112	4.82	12.28	24.24	0.95
One	692.92	50-year	45.00	61.80	62.95	62.95	63.27	0.022806	4.88	12.84	24.88	0.95
One	692.92	100-year	51.00	61.80	63.02	63.02	63.35	0.021973	5.04	14.50	26.73	0.94
One	600.89	Baseflow	6.00	58.00	58.63	58.63	58.75	0.038984	3.09	2.42	9.48	1.03
One	600.89	2-year	16.00	58.00	58.86	58.86	59.07	0.038710	4.01	5.07	12.98	1.09
One	600.89	5-year	26.00	58.00	59.02	59.02	59.29	0.037820	4.60	7.30	15.13	1.11
One	600.89	10-year	36.00	58.00	59.18	59.18	59.47	0.033594	4.85	9.87	18.09	1.07
One	600.89	25-year	43.00	58.00	59.29	59.29	59.57	0.031145	4.75	12.05	20.94	1.04
One	600.89	50-year	45.00	58.00	59.31	59.31	59.59	0.031358	4.77	12.54	21.55	1.04
One	600.89	100-year	51.00	58.00	59.36	59.36	59.66	0.032926	4.92	13.74	23.01	1.07
One	504.21	Baseflow	6.00	56.00	56.45	56.34	56.52	0.026318	2.65	3.27	10.51	0.83
One	504.21	2-year	16.00	56.00	56.70	56.66	56.84	0.032181	3.85	7.13	20.66	0.97
One	504.21	5-year	26.00	56.00	56.83	56.82	57.01	0.035259	4.40	10.29	25.44	1.04
One	504.21	10-year	36.00	56.00	56.98	56.92	57.15	0.028936	4.44	14.49	31.40	0.97
One	504.21	25-year	43.00	56.00	57.02	57.00	57.23	0.033776	4.91	15.72	33.07	1.06
One	504.21	50-year	45.00	56.00	57.03	57.00	57.25	0.034691	5.02	16.13	33.65	1.07
One	504.21	100-year	51.00	56.00	57.09	57.05	57.31	0.032901	5.07	18.30	36.70	1.06
One	446.99	Baseflow	6.00	53.42	53.87	53.87	54.02	0.070032	3.73	2.19	7.82	1.33
One	446.99	2-year	16.00	53.42	54.15	54.15	54.37	0.051242	4.62	5.04	13.20	1.24
One	446.99	5-year	26.00	53.42	54.37	54.37	54.57	0.044714	4.50	8.65	20.62	1.17
One	446.99	10-year	36.00	53.42	54.45	54.45	54.74	0.054902	5.37	10.37	23.28	1.32
One	446.99	25-year	43.00	53.42	54.55	54.55	54.84	0.044165	5.38	12.97	26.65	1.22
One	446.99	50-year	45.00	53.42	54.58	54.58	54.86	0.042752	5.41	13.61	27.41	1.20
One	446.99	100-year	51.00	53.42	54.62	54.62	54.94	0.044684	5.74	14.76	28.74	1.24
One	347.11	Baseflow	6.00	50.60	51.21	51.14	51.31	0.018779	2.49	2.41	6.94	0.74
One	347.11	2-year	16.00	50.60	51.57	51.42	51.71	0.014086	3.06	5.23	8.77	0.70
One	347.11	5-year	26.00	50.60	51.82	51.62	52.00	0.012806	3.40	7.64	10.08	0.69
One	347.11	10-year	36.00	50.60	52.01	51.79	52.23	0.012366	3.78	9.57	11.07	0.70
One	347.11	25-year	43.00	50.60	52.12	51.90	52.37	0.012356	4.00	10.89	12.13	0.71
One	347.11	50-year	45.00	50.60	52.15	51.92	52.41	0.012456	4.07	11.24	12.37	0.71
One	347.11	100-year	51.00	50.60	52.23	51.99	52.51	0.012674	4.27	12.24	13.30	0.73
One	230.87	Baseflow	6.00	48.20	48.85	48.78	48.98	0.021293	2.96	2.03	4.77	0.80

HEC-RAS Plan: Existing River: Ebright Reach: One (Continued)

Reach	River Sta	Profile	Q Total	Min Ch El	W.S. Elev	Crit W.S.	E.G. Elev	E.G. Slope	Vel Chnl	Flow Area	Top Width	Froude # Chl
			(cfs)	(ft)	(ft)	(ft)	(ft)	(ft/ft)	(ft/s)	(sq ft)	(ft)	
One	230.87	2-year	16.00	48.20	49.16	49.13	49.46	0.027846	4.45	3.60	5.40	0.96
One	230.87	5-year	26.00	48.20	49.40	49.40	49.83	0.029316	5.25	4.95	5.89	1.01
One	230.87	10-year	36.00	48.20	49.64	49.64	50.12	0.028210	5.59	6.43	6.67	1.00
One	230.87	25-year	43.00	48.20	49.77	49.77	50.30	0.026874	5.83	7.44	8.02	0.99
One	230.87	50-year	45.00	48.20	49.82	49.82	50.35	0.026212	5.88	7.77	8.47	0.99
One	230.87	100-year	51.00	48.20	49.93	49.93	50.49	0.024520	6.00	8.84	9.97	0.97
One	104.99	Baseflow	6.00	45.80	46.43	46.33	46.48	0.018928	2.12	4.02	14.00	0.61
One	104.99	2-year	16.00	45.80	46.72	46.54	46.79	0.016832	2.66	8.82	19.39	0.61
One	104.99	5-year	26.00	45.80	46.92	46.69	47.01	0.015858	2.96	13.07	23.19	0.62
One	104.99	10-year	36.00	45.80	47.09	46.81	47.19	0.014843	3.15	17.49	27.76	0.61
One	104.99	25-year	43.00	45.80	47.22	46.87	47.31	0.014214	3.26	21.24	34.02	0.60
One	104.99	50-year	45.00	45.80	47.24	46.89	47.34	0.013935	3.28	22.18	34.74	0.60
One	104.99	100-year	51.00	45.80	47.33	46.94	47.43	0.013402	3.36	25.49	40.01	0.59
One	38.62	Baseflow	6.00	45.00	45.62	45.42	45.66	0.009279	1.68	3.83	10.35	0.44
One	38.62	2-year	16.00	45.00	45.98	45.68	46.05	0.008853	2.25	8.40	15.13	0.46
One	38.62	5-year	26.00	45.00	46.22	45.87	46.31	0.008298	2.60	12.50	18.42	0.47
One	38.62	10-year	36.00	45.00	46.40	46.02	46.51	0.008391	2.92	16.02	20.96	0.48
One	38.62	25-year	43.00	45.00	46.50	46.10	46.63	0.008561	3.13	18.30	22.53	0.49
One	38.62	50-year	45.00	45.00	46.53	46.13	46.66	0.008731	3.20	18.84	22.99	0.50
One	38.62	100-year	51.00	45.00	46.59	46.19	46.74	0.009365	3.43	20.31	24.22	0.52
One	19.31	Baseflow	6.00	44.38	45.10	45.10	45.28	0.056313	3.40	1.76	4.98	1.01
One	19.31	2-year	16.00	44.38	45.44	45.44	45.70	0.048421	4.05	3.95	8.00	1.00
One	19.31	5-year	26.00	44.38	45.64	45.64	45.98	0.043237	4.65	5.76	10.08	0.99
One	19.31	10-year	36.00	44.38	45.84	45.84	46.20	0.034004	4.88	8.18	15.11	0.92
One	19.31	25-year	43.00	44.38	45.96	45.96	46.33	0.029677	4.97	10.31	19.40	0.87
One	19.31	50-year	45.00	44.38	46.00	46.00	46.36	0.028002	4.96	11.09	20.95	0.85
One	19.31	100-year	51.00	44.38	46.12	46.12	46.45	0.023675	4.88	14.00	31.34	0.80
One	19		Culvert									
One	18	Baseflow	6.00	42.51	43.01	43.01	43.15	0.037404	2.99	2.01	7.40	1.01
One	18	2-year	16.00	42.51	43.27	43.27	43.50	0.032011	3.83	4.18	9.39	1.01
One	18	5-year	26.00	42.51	43.44	43.44	43.75	0.029557	4.42	5.88	9.95	1.01
One	18	10-year	36.00	42.51	43.60	43.60	43.96	0.028009	4.86	7.41	10.35	1.01
One	18	25-year	43.00	42.51	43.69	43.69	44.10	0.027194	5.11	8.42	10.60	1.01
One	18	50-year	45.00	42.51	43.72	43.72	44.13	0.026996	5.17	8.70	10.67	1.01

HEC-RAS Plan: Existing River: Ebright Reach: One (Continued)

Reach	River Sta	Profile	Q Total	Min Ch El	W.S. Elev	Crit W.S.	E.G. Elev	E.G. Slope	Vel Chnl	Flow Area	Top Width	Froude # Chl
			(cfs)	(ft)	(ft)	(ft)	(ft)	(ft/ft)	(ft/s)	(sq ft)	(ft)	
One	18	100-year	51.00	42.51	43.79	43.79	44.24	0.026476	5.36	9.52	10.87	1.01
One	13	Baseflow	6.00	41.12	41.86	41.43	41.88	0.001617	1.02	5.86	9.71	0.23
One	13	2-year	16.00	41.12	42.43	41.68	42.46	0.001424	1.31	12.21	12.64	0.23
One	13	5-year	26.00	41.12	42.88	41.86	42.91	0.001214	1.42	18.36	14.98	0.23
One	13	10-year	36.00	41.12	43.27	42.02	43.30	0.000981	1.45	26.10	25.69	0.21
One	13	25-year	43.00	41.12	43.52	42.12	43.55	0.000841	1.44	33.47	33.48	0.20
One	13	50-year	45.00	41.12	43.59	42.15	43.62	0.000804	1.44	35.84	35.63	0.19
One	13	100-year	51.00	41.12	43.79	42.23	43.82	0.000692	1.40	43.84	42.07	0.18
One	11	Baseflow	6.00	40.58	41.86	41.04	41.87	0.000205	0.49	12.36	13.50	0.09
One	11	2-year	16.00	40.58	42.44	41.26	42.45	0.000317	0.78	20.40	14.62	0.12
One	11	5-year	26.00	40.58	42.88	41.40	42.89	0.000354	0.96	27.20	17.15	0.13
One	11	10-year	36.00	40.58	43.27	41.53	43.29	0.000352	1.08	35.05	22.93	0.13
One	11	25-year	43.00	40.58	43.52	41.61	43.54	0.000346	1.13	41.24	27.25	0.13
One	11	50-year	45.00	40.58	43.59	41.63	43.61	0.000344	1.15	43.14	28.48	0.13
One	11	100-year	51.00	40.58	43.79	41.70	43.81	0.000331	1.18	49.33	32.17	0.13
One	10		Culvert									
One	9	Baseflow	6.00	39.31	39.82	39.77	39.93	0.022613	2.73	2.20	6.32	0.81
One	9	2-year	16.00	39.31	40.10	40.07	40.32	0.025444	3.70	4.32	8.54	0.92
One	9	5-year	26.00	39.31	40.28	40.27	40.58	0.027878	4.35	5.98	9.95	0.99
One	9	10-year	36.00	39.31	40.44	40.44	40.79	0.027968	4.73	7.61	11.16	1.01
One	9	25-year	43.00	39.31	40.54	40.54	40.91	0.027244	4.90	8.77	11.94	1.01
One	9	50-year	45.00	39.31	40.56	40.56	40.95	0.027327	4.97	9.06	12.12	1.01
One	9	100-year	51.00	39.31	40.63	40.63	41.04	0.026897	5.15	9.91	12.36	1.01
One	7	Baseflow	6.00	37.48	38.12	38.12	38.29	0.036187	3.28	1.83	5.61	1.01
One	7	2-year	16.00	37.48	38.44	38.43	38.69	0.031202	4.00	4.00	8.14	1.01
One	7	5-year	26.00	37.48	38.64	38.63	38.96	0.027849	4.50	5.78	8.95	0.99
One	7	10-year	36.00	37.48	38.83	38.81	39.19	0.025218	4.81	7.48	9.66	0.96
One	7	25-year	43.00	37.48	38.98	38.91	39.33	0.021465	4.80	8.96	10.23	0.90
One	7	50-year	45.00	37.48	39.00	38.94	39.37	0.021497	4.87	9.24	10.34	0.91
One	7	100-year	51.00	37.48	39.09	39.02	39.48	0.021402	5.04	10.11	10.66	0.91
One	5	Baseflow	6.00	36.09	36.62	36.54	36.72	0.018357	2.59	2.31	6.07	0.74
One	5	2-year	16.00	36.09	36.92	36.84	37.13	0.020328	3.70	4.33	7.06	0.83
One	5	5-year	26.00	36.09	37.13	37.06	37.44	0.021840	4.41	5.89	7.67	0.89

HEC-RAS Plan: Existing River: Ebright Reach: One (Continued)

Reach	River Sta	Profile	Q Total	Min Ch El	W.S. Elev	Crit W.S.	E.G. Elev	E.G. Slope	Vel Chnl	Flow Area	Top Width	Froude # Chl
			(cfs)	(ft)	(ft)	(ft)	(ft)	(ft/ft)	(ft/s)	(sq ft)	(ft)	
One	5	10-year	36.00	36.09	37.30	37.25	37.69	0.023216	4.97	7.24	8.17	0.93
One	5	25-year	43.00	36.09	37.37	37.37	37.84	0.026866	5.52	7.79	8.36	1.01
One	5	50-year	45.00	36.09	37.40	37.40	37.89	0.026718	5.58	8.06	8.45	1.01
One	5	100-year	51.00	36.09	37.50	37.50	38.01	0.026061	5.74	8.88	8.73	1.00
One	3	Baseflow	6.00	33.02	33.70	33.70	33.87	0.035940	3.35	1.79	5.28	1.01
One	3	2-year	16.00	33.02	34.02	34.02	34.28	0.031463	4.12	3.89	7.60	1.02
One	3	5-year	26.00	33.02	34.24	34.24	34.56	0.029149	4.58	5.67	8.90	1.01
One	3	10-year	36.00	33.02	34.41	34.41	34.79	0.027966	4.93	7.30	9.94	1.01
One	3	25-year	43.00	33.02	35.46	34.52	35.52	0.002287	2.05	20.99	16.22	0.32
One	3	50-year	45.00	33.02	35.77	34.55	35.82	0.001356	1.71	26.37	18.10	0.25
One	3	100-year	51.00	33.02	36.59	34.63	36.61	0.000466	1.18	43.14	23.00	0.15
One	1	Baseflow	6.00	30.10	30.46	30.46	30.60	0.036455	2.98	2.01	7.25	1.00
One	1	2-year	16.00	30.10	31.80	30.73	31.81	0.000272	0.73	39.08	79.21	0.11
One	1	5-year	26.00	30.10	33.10	30.92	33.10	0.000027	0.36	142.06	79.21	0.04
One	1	10-year	36.00	30.10	34.50	31.07	34.50	0.000009	0.28	252.95	79.21	0.02
One	1	25-year	43.00	30.10	35.50	31.16	35.50	0.000005	0.25	332.16	79.21	0.02
One	1	50-year	45.00	30.10	35.80	31.18	35.80	0.000005	0.24	355.92	79.21	0.02
One	1	100-year	51.00	30.10	36.60	31.24	36.60	0.000004	0.23	419.29	79.21	0.02

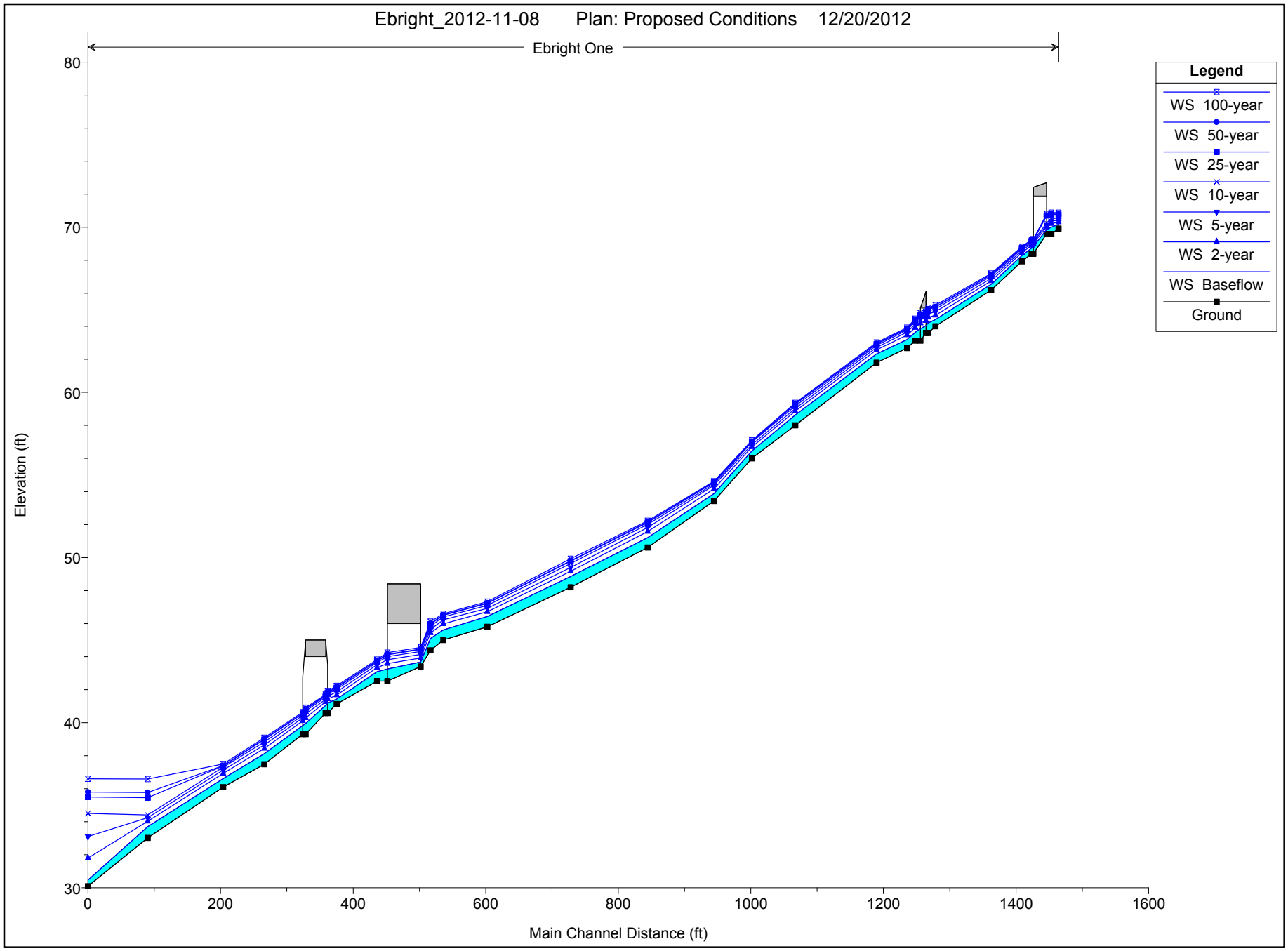
Ebright_2012-11-08 Plan: Proposed Conditions 12/20/2012
Ebright One
Legend
WS 100-year
WS 50-year
WS 25-year
WS 10-year
WS 5-year
WS 2-year
WS Baseflow
Ground
Elevation (ft)
80
70
60
50
40
30
0
200
400
600
800
1000
1200
1400
1600
Main Channel Distance (ft)

HEC-RAS Plan: Proposed River: Ebright Reach: One

Reach	River Sta	Profile	Q Total	Min Ch El	W.S. Elev	Crit W.S.	E.G. Elev	E.G. Slope	Vel Chnl	Flow Area	Top Width	Froude # Chl
			(cfs)	(ft)	(ft)	(ft)	(ft)	(ft/ft)	(ft/s)	(sq ft)	(ft)	
One	967.42	Baseflow	6.00	69.92	70.17	70.17	70.25	0.033501	2.23	2.69	17.43	1.00
One	967.42	2-year	16.00	69.92	70.32	70.32	70.46	0.027952	3.03	5.29	18.94	1.01
One	967.42	5-year	26.00	69.92	70.43	70.43	70.62	0.024921	3.49	7.46	19.76	1.00
One	967.42	10-year	36.00	69.92	70.54	70.52	70.75	0.020851	3.70	9.73	20.58	0.95
One	967.42	25-year	43.00	69.92	70.78		70.91	0.007948	2.87	14.96	22.34	0.62
One	967.42	50-year	45.00	69.92	70.81		70.94	0.007692	2.89	15.59	22.54	0.61
One	967.42	100-year	51.00	69.92	70.89		71.03	0.007020	2.93	17.43	23.05	0.59
One	956.61	Baseflow	6.00	69.60	70.01	69.87	70.03	0.004496	1.20	5.00	18.22	0.40
One	956.61	2-year	16.00	69.60	70.22	70.02	70.27	0.005024	1.78	8.97	19.54	0.46
One	956.61	5-year	26.00	69.60	70.39	70.13	70.46	0.004807	2.10	12.35	20.20	0.47
One	956.61	10-year	36.00	69.60	70.54	70.23	70.62	0.004627	2.34	15.39	20.78	0.48
One	956.61	25-year	43.00	69.60	70.78	70.29	70.85	0.002706	2.09	20.57	21.89	0.38
One	956.61	50-year	45.00	69.60	70.81	70.31	70.88	0.002713	2.12	21.18	22.03	0.38
One	956.61	100-year	51.00	69.60	70.89	70.36	70.96	0.002740	2.22	22.97	22.50	0.39
One	940		Bridge									
One	926.94	Baseflow	6.00	68.40	68.74	68.74	68.83	0.030125	2.43	2.47	13.04	0.98
One	926.94	2-year	16.00	68.40	68.90	68.90	69.06	0.028378	3.16	5.06	17.11	1.03
One	926.94	5-year	26.00	68.40	69.03	69.03	69.23	0.025410	3.59	7.24	18.65	1.01
One	926.94	10-year	36.00	68.40	69.12	69.12	69.37	0.023591	3.99	9.04	18.82	1.01
One	926.94	25-year	43.00	68.40	69.18	69.18	69.46	0.022561	4.22	10.21	18.92	1.01
One	926.94	50-year	45.00	68.40	69.20	69.20	69.48	0.022458	4.29	10.52	18.94	1.01
One	926.94	100-year	51.00	68.40	69.25	69.25	69.56	0.021875	4.47	11.45	19.01	1.01
One	912.33	Baseflow	6.00	67.93	68.29	68.29	68.38	0.031360	2.40	2.50	13.82	0.99
One	912.33	2-year	16.00	67.93	68.46	68.46	68.62	0.026736	3.19	5.01	15.97	1.00
One	912.33	5-year	26.00	67.93	68.58	68.58	68.80	0.024860	3.71	7.01	16.82	1.01
One	912.33	10-year	36.00	67.93	68.69	68.69	68.95	0.023267	4.10	8.78	17.22	1.01
One	912.33	25-year	43.00	67.93	68.75	68.75	69.04	0.022449	4.32	9.95	17.49	1.01
One	912.33	50-year	45.00	67.93	68.77	68.77	69.07	0.022203	4.38	10.27	17.56	1.01
One	912.33	100-year	51.00	67.93	68.83	68.83	69.15	0.021260	4.52	11.28	17.78	1.00
One	865.79	Baseflow	6.00	66.20	66.54		66.62	0.017932	2.22	2.70	10.96	0.79
One	865.79	2-year	16.00	66.20	66.75	66.70	66.90	0.018135	3.15	5.08	12.22	0.86
One	865.79	5-year	26.00	66.20	66.90	66.85	67.11	0.017858	3.70	7.02	13.05	0.89
One	865.79	10-year	36.00	66.20	67.03	66.99	67.29	0.017536	4.10	8.78	13.80	0.91
One	865.79	25-year	43.00	66.20	67.11	67.07	67.41	0.017388	4.33	9.93	14.26	0.91

HEC-RAS Plan: Proposed River: Ebright Reach: One (Continued)

Reach	River Sta	Profile	Q Total	Min Ch El	W.S. Elev	Crit W.S.	E.G. Elev	E.G. Slope	Vel Chnl	Flow Area	Top Width	Froude # Chl
			(cfs)	(ft)	(ft)	(ft)	(ft)	(ft/ft)	(ft/s)	(sq ft)	(ft)	
One	865.79	50-year	45.00	66.20	67.14	67.09	67.44	0.017296	4.39	10.26	14.38	0.91
One	865.79	100-year	51.00	66.20	67.20	67.15	67.52	0.017168	4.55	11.20	14.74	0.92
One	782.00	Baseflow	6.00	64.00	64.41	64.41	64.55	0.036079	3.04	1.97	6.81	1.00
One	782.00	2-year	16.00	64.00	64.68	64.68	64.93	0.031505	4.07	3.93	7.74	1.01
One	782.00	5-year	26.00	64.00	64.88	64.88	65.22	0.029419	4.63	5.61	8.55	1.01
One	782.00	10-year	36.00	64.00	65.06	65.06	65.45	0.027930	5.02	7.16	9.24	1.01
One	782.00	25-year	43.00	64.00	65.16	65.16	65.59	0.027338	5.26	8.17	9.64	1.01
One	782.00	50-year	45.00	64.00	65.19	65.19	65.63	0.027190	5.33	8.45	9.75	1.01
One	782.00	100-year	51.00	64.00	65.28	65.28	65.75	0.026540	5.49	9.29	10.05	1.01
One	771.15	Baseflow	6.00	63.60	64.20	64.04	64.27	0.009918	2.03	2.96	7.07	0.55
One	771.15	2-year	16.00	63.60	64.55	64.35	64.66	0.011060	2.66	6.01	10.33	0.62
One	771.15	5-year	26.00	63.60	64.76	64.55	64.91	0.011189	3.13	8.30	11.22	0.64
One	771.15	10-year	36.00	63.60	64.92	64.69	65.12	0.011557	3.53	10.20	11.71	0.67
One	771.15	25-year	43.00	63.60	65.03	64.78	65.25	0.011768	3.77	11.42	12.03	0.68
One	771.15	50-year	45.00	63.60	65.05	64.81	65.28	0.011824	3.83	11.76	12.11	0.68
One	771.15	100-year	51.00	63.60	65.13	64.88	65.38	0.011966	4.00	12.74	12.36	0.69
One	760		Bridge									
One	751.52	Baseflow	6.00	63.13	63.63	63.63	63.79	0.036204	3.15	1.90	6.28	1.01
One	751.52	2-year	16.00	63.13	63.92	63.92	64.16	0.031503	3.93	4.07	8.69	1.01
One	751.52	5-year	26.00	63.13	64.12	64.12	64.42	0.029494	4.35	5.97	10.36	1.01
One	751.52	10-year	36.00	63.13	64.28	64.28	64.62	0.028169	4.68	7.69	11.55	1.01
One	751.52	25-year	43.00	63.13	64.37	64.37	64.74	0.027398	4.88	8.81	12.17	1.01
One	751.52	50-year	45.00	63.13	64.40	64.40	64.78	0.027323	4.94	9.11	12.33	1.01
One	751.52	100-year	51.00	63.13	64.47	64.47	64.87	0.026739	5.10	10.00	12.68	1.01
One	739.27	Baseflow	6.00	62.68	63.20		63.26	0.013391	1.98	3.03	9.59	0.62
One	739.27	2-year	16.00	62.68	63.48	63.33	63.59	0.012882	2.72	5.96	12.76	0.66
One	739.27	5-year	26.00	62.68	63.65	63.51	63.81	0.013054	3.25	8.52	16.46	0.69
One	739.27	10-year	36.00	62.68	63.78	63.65	63.99	0.013841	3.74	10.74	19.13	0.74
One	739.27	25-year	43.00	62.68	63.85	63.74	64.09	0.014571	4.06	12.16	20.67	0.77
One	739.27	50-year	45.00	62.68	63.87	63.76	64.12	0.014716	4.14	12.57	21.06	0.77
One	739.27	100-year	51.00	62.68	63.92	63.83	64.21	0.015237	4.39	13.75	22.18	0.79
One	692.92	Baseflow	6.00	61.80	62.33	62.29	62.44	0.024860	2.65	2.30	8.98	0.84
One	692.92	2-year	16.00	61.80	62.58	62.57	62.76	0.025319	3.53	5.34	15.40	0.91

HEC-RAS Plan: Proposed River: Ebright Reach: One (Continued)

Reach	River Sta	Profile	Q Total	Min Ch El	W.S. Elev	Crit W.S.	E.G. Elev	E.G. Slope	Vel Chnl	Flow Area	Top Width	Froude # Chl
			(cfs)	(ft)	(ft)	(ft)	(ft)	(ft/ft)	(ft/s)	(sq ft)	(ft)	
One	692.92	5-year	26.00	61.80	62.72	62.72	62.97	0.025895	4.17	7.81	18.72	0.96
One	692.92	10-year	36.00	61.80	62.85	62.85	63.14	0.024287	4.60	10.38	21.88	0.96
One	692.92	25-year	43.00	61.80	62.93	62.93	63.24	0.023112	4.82	12.28	24.24	0.95
One	692.92	50-year	45.00	61.80	62.95	62.95	63.27	0.022806	4.88	12.84	24.88	0.95
One	692.92	100-year	51.00	61.80	63.02	63.02	63.35	0.021973	5.04	14.50	26.73	0.94
One	600.89	Baseflow	6.00	58.00	58.63	58.63	58.75	0.038984	3.09	2.42	9.48	1.03
One	600.89	2-year	16.00	58.00	58.86	58.86	59.07	0.038710	4.01	5.07	12.98	1.09
One	600.89	5-year	26.00	58.00	59.02	59.02	59.29	0.037622	4.59	7.32	15.14	1.11
One	600.89	10-year	36.00	58.00	59.18	59.18	59.47	0.033594	4.85	9.87	18.09	1.07
One	600.89	25-year	43.00	58.00	59.29	59.29	59.57	0.031145	4.75	12.05	20.94	1.04
One	600.89	50-year	45.00	58.00	59.31	59.31	59.59	0.031358	4.77	12.54	21.55	1.04
One	600.89	100-year	51.00	58.00	59.36	59.36	59.66	0.032926	4.92	13.74	23.01	1.07
One	504.21	Baseflow	6.00	56.00	56.45	56.34	56.52	0.026134	2.65	3.28	10.53	0.83
One	504.21	2-year	16.00	56.00	56.70	56.66	56.84	0.032181	3.85	7.13	20.66	0.97
One	504.21	5-year	26.00	56.00	56.83	56.82	57.01	0.035259	4.40	10.29	25.44	1.04
One	504.21	10-year	36.00	56.00	56.98	56.92	57.15	0.028936	4.44	14.49	31.40	0.97
One	504.21	25-year	43.00	56.00	57.02	57.00	57.23	0.033776	4.91	15.72	33.07	1.06
One	504.21	50-year	45.00	56.00	57.03	57.00	57.25	0.034691	5.02	16.13	33.65	1.07
One	504.21	100-year	51.00	56.00	57.09	57.05	57.31	0.032901	5.07	18.30	36.70	1.06
One	446.99	Baseflow	6.00	53.42	53.87	53.87	54.02	0.070834	3.74	2.18	7.80	1.33
One	446.99	2-year	16.00	53.42	54.15	54.15	54.37	0.051242	4.62	5.04	13.20	1.24
One	446.99	5-year	26.00	53.42	54.37	54.37	54.57	0.044714	4.50	8.65	20.62	1.17
One	446.99	10-year	36.00	53.42	54.45	54.45	54.74	0.054902	5.37	10.37	23.28	1.32
One	446.99	25-year	43.00	53.42	54.55	54.55	54.84	0.044165	5.38	12.97	26.65	1.22
One	446.99	50-year	45.00	53.42	54.58	54.58	54.86	0.042752	5.41	13.61	27.41	1.20
One	446.99	100-year	51.00	53.42	54.62	54.62	54.94	0.044684	5.74	14.76	28.74	1.24
One	347.11	Baseflow	6.00	50.60	51.21		51.31	0.018509	2.47	2.42	6.95	0.74
One	347.11	2-year	16.00	50.60	51.57		51.71	0.014173	3.07	5.22	8.76	0.70
One	347.11	5-year	26.00	50.60	51.82		52.00	0.012817	3.41	7.63	10.08	0.69
One	347.11	10-year	36.00	50.60	52.01		52.23	0.012396	3.78	9.56	11.07	0.70
One	347.11	25-year	43.00	50.60	52.12		52.37	0.012277	3.99	10.92	12.15	0.70
One	347.11	50-year	45.00	50.60	52.15		52.41	0.012348	4.06	11.27	12.40	0.71
One	347.11	100-year	51.00	50.60	52.23		52.51	0.012592	4.26	12.27	13.34	0.72
One	230.87	Baseflow	6.00	48.20	48.85		48.98	0.021540	2.97	2.02	4.76	0.80

HEC-RAS Plan: Proposed River: Ebright Reach: One (Continued)

Reach	River Sta	Profile	Q Total	Min Ch El	W.S. Elev	Crit W.S.	E.G. Elev	E.G. Slope	Vel Chnl	Flow Area	Top Width	Froude # Chl
			(cfs)	(ft)	(ft)	(ft)	(ft)	(ft/ft)	(ft/s)	(sq ft)	(ft)	
One	230.87	2-year	16.00	48.20	49.16	49.13	49.46	0.027591	4.43	3.61	5.40	0.96
One	230.87	5-year	26.00	48.20	49.40	49.40	49.83	0.029271	5.25	4.96	5.89	1.01
One	230.87	10-year	36.00	48.20	49.64	49.64	50.12	0.028125	5.59	6.44	6.69	1.00
One	230.87	25-year	43.00	48.20	49.77	49.77	50.30	0.027130	5.85	7.41	7.99	1.00
One	230.87	50-year	45.00	48.20	49.81	49.81	50.35	0.026549	5.90	7.73	8.41	0.99
One	230.87	100-year	51.00	48.20	49.93	49.93	50.49	0.024760	6.02	8.80	9.92	0.97
One	104.99	Baseflow	6.00	45.80	46.43	46.33	46.48	0.018715	2.11	4.04	14.02	0.61
One	104.99	2-year	16.00	45.80	46.72		46.79	0.016832	2.66	8.82	19.39	0.61
One	104.99	5-year	26.00	45.80	46.92		47.01	0.015858	2.96	13.07	23.19	0.62
One	104.99	10-year	36.00	45.80	47.09		47.19	0.014843	3.15	17.49	27.76	0.61
One	104.99	25-year	43.00	45.80	47.22		47.31	0.014214	3.26	21.24	34.02	0.60
One	104.99	50-year	45.00	45.80	47.24		47.34	0.013935	3.28	22.18	34.74	0.60
One	104.99	100-year	51.00	45.80	47.33		47.43	0.013402	3.36	25.49	40.01	0.59
One	38.62	Baseflow	6.00	45.00	45.61		45.66	0.009395	1.68	3.81	10.33	0.44
One	38.62	2-year	16.00	45.00	45.98		46.05	0.008853	2.25	8.40	15.13	0.46
One	38.62	5-year	26.00	45.00	46.22		46.31	0.008298	2.60	12.50	18.42	0.47
One	38.62	10-year	36.00	45.00	46.40		46.51	0.008391	2.92	16.02	20.96	0.48
One	38.62	25-year	43.00	45.00	46.50		46.63	0.008561	3.13	18.30	22.53	0.49
One	38.62	50-year	45.00	45.00	46.53		46.66	0.008731	3.20	18.84	22.99	0.50
One	38.62	100-year	51.00	45.00	46.59		46.74	0.009365	3.43	20.31	24.22	0.52
One	19.31	Baseflow	6.00	44.38	45.10	45.10	45.28	0.056313	3.40	1.76	4.98	1.01
One	19.31	2-year	16.00	44.38	45.44	45.44	45.70	0.048421	4.05	3.95	8.00	1.00
One	19.31	5-year	26.00	44.38	45.64	45.64	45.98	0.043237	4.65	5.76	10.08	0.99
One	19.31	10-year	36.00	44.38	45.84	45.84	46.20	0.034004	4.88	8.18	15.11	0.92
One	19.31	25-year	43.00	44.38	45.96	45.96	46.33	0.029677	4.97	10.31	19.40	0.87
One	19.31	50-year	45.00	44.38	46.00	46.00	46.36	0.028002	4.96	11.09	20.95	0.85
One	19.31	100-year	51.00	44.38	46.12	46.12	46.45	0.023675	4.88	14.00	31.34	0.80
One	19		Bridge									
One	18	Baseflow	6.00	42.51	43.08	43.01	43.17	0.019075	2.37	2.53	7.99	0.74
One	18	2-year	16.00	42.51	43.33	43.27	43.51	0.021227	3.35	4.78	9.65	0.84
One	18	5-year	26.00	42.51	43.50	43.44	43.75	0.022441	4.04	6.44	10.10	0.89
One	18	10-year	36.00	42.51	43.64	43.60	43.96	0.023440	4.58	7.86	10.46	0.93
One	18	25-year	43.00	42.51	43.73	43.69	44.10	0.023941	4.90	8.78	10.69	0.95
One	18	50-year	45.00	42.51	43.75	43.72	44.13	0.024136	4.98	9.03	10.75	0.96

HEC-RAS Plan: Proposed River: Ebright Reach: One (Continued)

Reach	River Sta	Profile	Q Total	Min Ch El	W.S. Elev	Crit W.S.	E.G. Elev	E.G. Slope	Vel Chnl	Flow Area	Top Width	Froude # Chl
			(cfs)	(ft)	(ft)	(ft)	(ft)	(ft/ft)	(ft/s)	(sq ft)	(ft)	
One	18	100-year	51.00	42.51	43.82	43.79	44.24	0.024582	5.23	9.76	10.93	0.97
One	13	Baseflow	6.00	41.12	41.43	41.43	41.56	0.038337	2.91	2.06	7.88	1.00
One	13	2-year	16.00	41.12	41.68	41.68	41.91	0.032612	3.87	4.13	8.98	1.01
One	13	5-year	26.00	41.12	41.86	41.86	42.17	0.030352	4.44	5.86	9.71	1.01
One	13	10-year	36.00	41.12	42.02	42.02	42.38	0.028760	4.82	7.48	10.48	1.00
One	13	25-year	43.00	41.12	42.12	42.12	42.51	0.028074	5.03	8.54	11.01	1.01
One	13	50-year	45.00	41.12	42.15	42.15	42.55	0.027880	5.09	8.84	11.15	1.01
One	13	100-year	51.00	41.12	42.23	42.23	42.65	0.027265	5.24	9.74	11.56	1.01
One	11	Baseflow	6.00	40.58	41.18	41.04	41.22	0.009643	1.65	3.63	11.76	0.52
One	11	2-year	16.00	40.58	41.42	41.26	41.51	0.010584	2.44	6.57	12.64	0.60
One	11	5-year	26.00	40.58	41.59	41.40	41.73	0.011359	2.98	8.73	12.97	0.64
One	11	10-year	36.00	40.58	41.73	41.53	41.91	0.011826	3.39	10.61	13.25	0.67
One	11	25-year	43.00	40.58	41.82	41.61	42.03	0.012070	3.64	11.82	13.42	0.68
One	11	50-year	45.00	40.58	41.85	41.63	42.06	0.012136	3.70	12.15	13.47	0.69
One	11	100-year	51.00	40.58	41.92	41.70	42.15	0.012280	3.88	13.13	13.61	0.70
One	10		Bridge									
One	9	Baseflow	6.00	39.31	39.82		39.93	0.022567	2.72	2.20	6.32	0.81
One	9	2-year	16.00	39.31	40.10	40.07	40.32	0.025444	3.70	4.32	8.54	0.92
One	9	5-year	26.00	39.31	40.28	40.27	40.58	0.027878	4.35	5.98	9.95	0.99
One	9	10-year	36.00	39.31	40.44	40.44	40.79	0.027968	4.73	7.61	11.16	1.01
One	9	25-year	43.00	39.31	40.54	40.54	40.91	0.027244	4.90	8.77	11.94	1.01
One	9	50-year	45.00	39.31	40.56	40.56	40.95	0.027334	4.97	9.06	12.12	1.01
One	9	100-year	51.00	39.31	40.63	40.63	41.04	0.026897	5.15	9.91	12.36	1.01
One	7	Baseflow	6.00	37.48	38.12	38.12	38.29	0.036290	3.28	1.83	5.60	1.01
One	7	2-year	16.00	37.48	38.44	38.43	38.69	0.031205	4.00	4.00	8.14	1.01
One	7	5-year	26.00	37.48	38.64	38.63	38.96	0.027849	4.50	5.78	8.95	0.99
One	7	10-year	36.00	37.48	38.83	38.81	39.19	0.025218	4.81	7.48	9.66	0.96
One	7	25-year	43.00	37.48	38.98	38.91	39.33	0.021349	4.79	8.98	10.24	0.90
One	7	50-year	45.00	37.48	39.01	38.94	39.37	0.021319	4.85	9.27	10.35	0.90
One	7	100-year	51.00	37.48	39.09	39.02	39.48	0.021122	5.02	10.16	10.68	0.91
One	5	Baseflow	6.00	36.09	36.62	36.54	36.72	0.018277	2.59	2.32	6.08	0.74
One	5	2-year	16.00	36.09	36.92		37.13	0.020328	3.70	4.33	7.06	0.83
One	5	5-year	26.00	36.09	37.13	37.06	37.44	0.021840	4.41	5.89	7.67	0.89

HEC-RAS Plan: Proposed River: Ebright Reach: One (Continued)

Reach	River Sta	Profile	Q Total	Min Ch El	W.S. Elev	Crit W.S.	E.G. Elev	E.G. Slope	Vel Chnl	Flow Area	Top Width	Froude # Chl
			(cfs)	(ft)	(ft)	(ft)	(ft)	(ft/ft)	(ft/s)	(sq ft)	(ft)	
One	5	10-year	36.00	36.09	37.30	37.25	37.69	0.023216	4.97	7.24	8.17	0.93
One	5	25-year	43.00	36.09	37.37	37.37	37.84	0.026855	5.52	7.79	8.36	1.01
One	5	50-year	45.00	36.09	37.40	37.40	37.89	0.026709	5.58	8.06	8.45	1.01
One	5	100-year	51.00	36.09	37.49	37.49	38.01	0.026314	5.76	8.85	8.72	1.01
One	3	Baseflow	6.00	33.02	33.70	33.70	33.87	0.035940	3.35	1.79	5.28	1.01
One	3	2-year	16.00	33.02	34.02	34.02	34.28	0.031463	4.12	3.89	7.60	1.02
One	3	5-year	26.00	33.02	34.24	34.24	34.56	0.029149	4.58	5.67	8.90	1.01
One	3	10-year	36.00	33.02	34.41	34.41	34.79	0.027966	4.93	7.30	9.94	1.01
One	3	25-year	43.00	33.02	35.46		35.52	0.002287	2.05	20.99	16.22	0.32
One	3	50-year	45.00	33.02	35.77		35.82	0.001356	1.71	26.37	18.10	0.25
One	3	100-year	51.00	33.02	36.59		36.61	0.000466	1.18	43.14	23.00	0.15
One	1	Baseflow	6.00	30.10	30.46	30.46	30.60	0.036455	2.98	2.01	7.25	1.00
One	1	2-year	16.00	30.10	31.80	30.73	31.81	0.000272	0.73	39.08	79.21	0.11
One	1	5-year	26.00	30.10	33.10	30.92	33.10	0.000027	0.36	142.06	79.21	0.04
One	1	10-year	36.00	30.10	34.50	31.07	34.50	0.000009	0.28	252.95	79.21	0.02
One	1	25-year	43.00	30.10	35.50	31.16	35.50	0.000005	0.25	332.16	79.21	0.02
One	1	50-year	45.00	30.10	35.80	31.18	35.80	0.000005	0.24	355.92	79.21	0.02
One	1	100-year	51.00	30.10	36.60	31.24	36.60	0.000004	0.23	419.29	79.21	0.02

Appendix B

Photo Points

Photo Point 1: Before (October 19, 2012)

Photo Point 1: After buffer enhancement (December 17, 2012)

Photo Point 2: Before (October 19, 2012)

Photo Point 2: (December 17, 2012) Enhancement Proposed in Phase Two

Photo Point 3: Before (October 19, 2012)

Photo Point 3: (December 17, 2012) Enhancement Proposed in Phase Two

Photo Point 4: Before (October 19, 2012)

Photo Point 4: (December 17, 2012) Enhancement Proposed in Phase Two

Photo Point 5: Before (October 19, 2012)

Photo Point 5: After Buffer Enhancement (December 17, 2012)

Photo Point 6: Before (October 19, 2012)

Photo Point 6: After Buffer Enhancement (December 17, 2012)

Photo Point 7: Before (October 19, 2012)

Photo Point 7: After Buffer Enhancement (December 17, 2012)

Photo Point 8: Before (October 19, 2012)

Photo Point 8: After Buffer Enhancement (December 17, 2012)

Photo Point 9: Before (October 19, 2012)

Photo Point 9: After buffer enhancement (December 17, 2012)

Photo Point 10: Before (October 19, 2012)

Photo Point 10: (December 17, 2012) Enhancement Proposed in Phase Two

Attachments

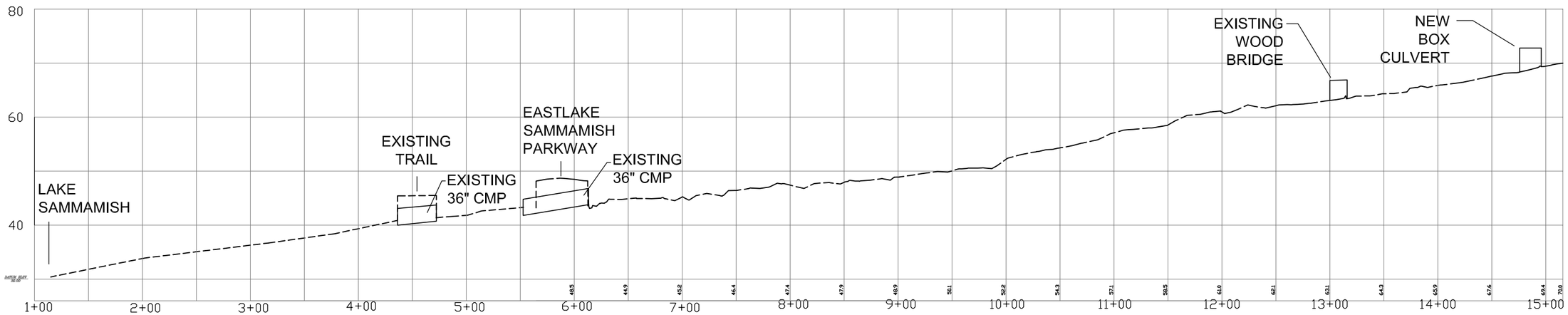

SCALE: V: 1"=50'
H: 1"=20'

EBRIGHT CREEK PROFILE

DAVID EVANS AND ASSOCIATES INC.

City of Sammamish Washington

Attachment 1
Ebright Creek Profile

Ebright Creek Enhancement Project
City of Sammamish

BUFFER ENHANCEMENT PLANT SCHEDULE

BOTANICAL NAME	COMMON NAME	SIZE	COND.	SPACING	REMARKS	PLANTING AREA QUANTITIES (SEE SHEET 1 OF 2) BE-1	BE-2	BE-3	(SEE SHEET 2 OF 2) BE-4	BE-5	BE-6	BE-7	BE-8	BE-9	BE-10	BR-1	BR-2	BR-3	BR-4	TOTAL
TREES																				
THUJA PLICATA	WESTERN RED CEDAR	4' HT MIN.,	5 GAL.	8' O.C.	WELL-BRANCHED, SINGLE TRUNK, STAKED	11	23	45	62	14	5	2	7	6	0	9	7	13	14	218
PICEA STICHENSIS	SITKA SPRUCE	4' HT MIN.,	5 GAL.	8' O.C.	WELL-BRANCHED, SINGLE TRUNK, STAKED	15	36	119	31	13	24	2	7	8	16	0	0	12	10	293
PSEUDOTSUGA MENZIESII	DOUGLAS FIR	4' HT MIN.,	5 GAL.	8' O.C.	WELL-BRANCHED, SINGLE TRUNK, STAKED	0	5	15	82	13	0	0	2	0	9	19	7	0	0	152
CRATAEGUS DOUGLASII	BLACK HAWTHORN	4' HT MIN.,	5 GAL.	4' O.C.	FULL, WELL BRANCHED	11	27	119	30	13	30	0	7	6	9	9	0	28	10	299
SALIX SITCHENSIS	SITKA WILLOW	36" HT MIN.,	LIVE STAKES	18" O.C.	PLANT WILLOWS ONLY WITHIN 10' OF TOP OF BANK	0	0	0	0	321	0	0	0	0	0	0	0	586	0	907
SHRUBS																				
LONICERA INVOLUCRATA	BLACK TWINBERRY	24" HT MIN.,	BARE ROOT/CONTAINER	4' O.C.	FULL, WELL BRANCHED	33	83	267	62	24	45	2	17	16	0	0	0	76	20	645
CORNUS SERICEA	RED OSIER DOGWOOD	24" HT MIN.,	BARE ROOT/CONTAINER	4' O.C.	FULL, WELL BRANCHED	22	55	178	62	40	44	5	17	16	0	0	0	0	0	439
ROSA PISOCARPA	SWAMP ROSE	24" HT MIN.,	BARE ROOT/CONTAINER	4' O.C.	FULL, WELL BRANCHED	6	14	45	248	48	35	2	14	12	78	80	23	76	23	704
RUBUS SPECTABILIS	SALMONBERRY	24" HT MIN.,	BARE ROOT/CONTAINER	4' O.C.	FULL, WELL BRANCHED	17	41	134	0	16	18	2	7	6	0	0	0	0	20	261
PHYSOCARPUS CAPITATUS	PACIFIC NINEBARK	24" HT MIN.,	BARE ROOT/CONTAINER	4' O.C.	FULL, WELL BRANCHED	22	55	178	0	16	35	3	7	12	0	0	0	0	0	328
RIBES SANGUINEUM	RED FLOWERING CURRANT	24" HT MIN.,	BARE ROOT/CONTAINER	4' O.C.	FULL, WELL BRANCHED	11	28	89	248	16	0	0	7	0	26	30	20	0	20	495
SYMPHORICARPOS ALBUS	SNOWBERRY	24" HT MIN.,	BARE ROOT/CONTAINER	4' O.C.	FULL, WELL BRANCHED														20	20
					PLANTING AREA TOTALS	148	367	1,189	825	534	236	18	92	82	138	147	57	791	137	4,761 GRAND TOTAL

SEE NOTES ON SHEET 2

VICINITY MAP

CALL BEFORE YOU DIG
Call: TOLL FREE
1-800-424-5555

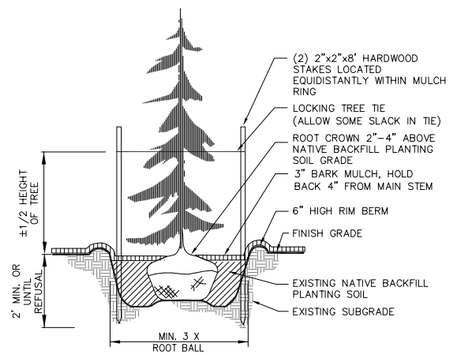

EVERGREEN TREE PLANTING

NOT TO SCALE

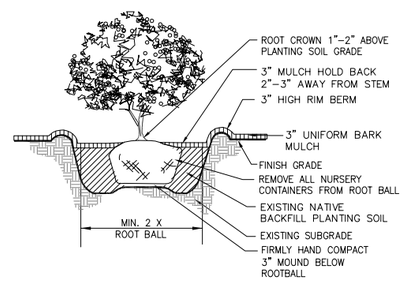

SHRUB PLANTING

NOT TO SCALE

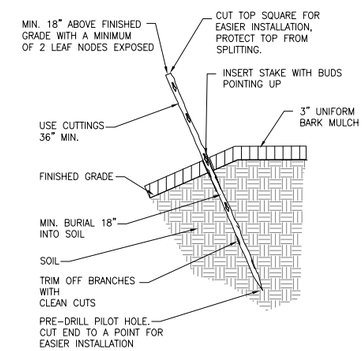

LIVE STAKE PLANTING

NOT TO SCALE

LEGEND

- LIMIT OF WORK
- ORDINARY HIGH WATER MARK (O.H.W.M.)
- CREEK CHANNEL
- EXISTING MINOR CONTOUR (0.5')
- EXISTING MAJOR CONTOUR (2.5')
- EXISTING DECIDUOUS TREE
- EXISTING CONIFEROUS TREE
- EXISTING BANK ROCK ARMOR
- CREEK FLOW

BE — BUFFER ENHANCEMENT AREA:
- UNIFORMLY CLEAR AND GRUB (UNDERSTORY) ALL INVASIVE AND NON-NATIVE PLANTS AND REMOVE FROM SITE
- PLANT NATIVE TREES @ 8' O.C. SPACING AND NATIVE SHRUBS AT 4' O.C. SPACING
- APPLY BARK MULCH TO 3" DEPTH

BE — BUFFER ENHANCEMENT AREA:
- SELECTIVELY CLEAR AND GRUB (UNDERSTORY) ALL INVASIVE AND NON-NATIVE PLANTS AND REMOVE FROM SITE
- INFILL PLANT NATIVE TREES AND SHRUBS @ 8' O.C. SPACING
- APPLY BARK MULCH TO A 3" DEPTH

BR — BUFFER RESTORATION AREA:
- PLANTING ONLY (MAINTAIN EXISTING GROUNDCOVER)
- PLANT NATIVE TREES @ 8' O.C. SPACING AND NATIVE SHRUBS @ 4' O.C. SPACING
- MAINTAIN EXISTING NATIVE GROUNDCOVER AND HERBACEOUS VEGETATION UNLESS OTHERWISE NOTED ON PLAN

VEGETATION PRESERVATION AREA: (DO NOT DISTURB)

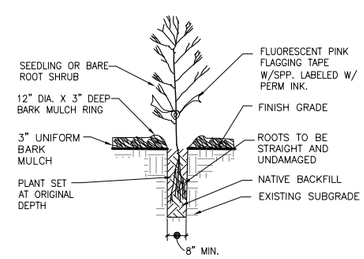

BARE ROOT PLANTING

NOT TO SCALE

0 20 40 80

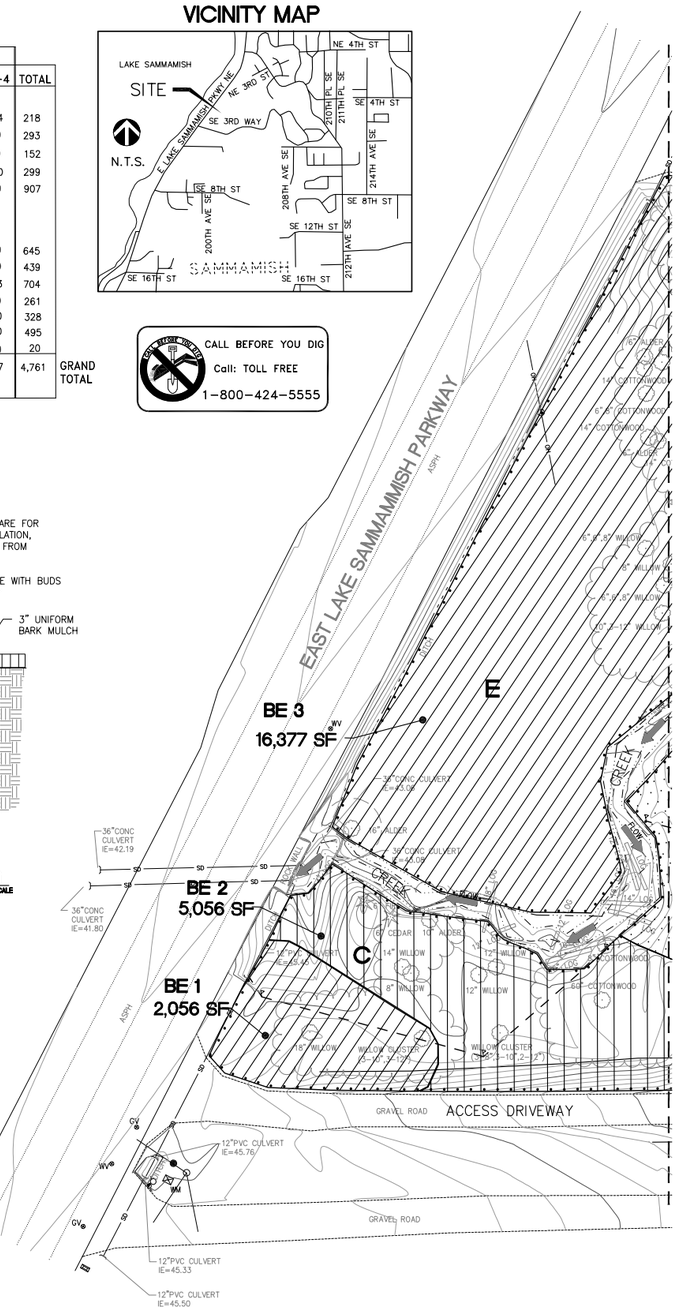

DAVID EVANS AND ASSOCIATES INC.

City of Sammamish

Attachment 2A
Vegetation Management Plan

Ebright Creek Enhancement Project
City of Sammamish

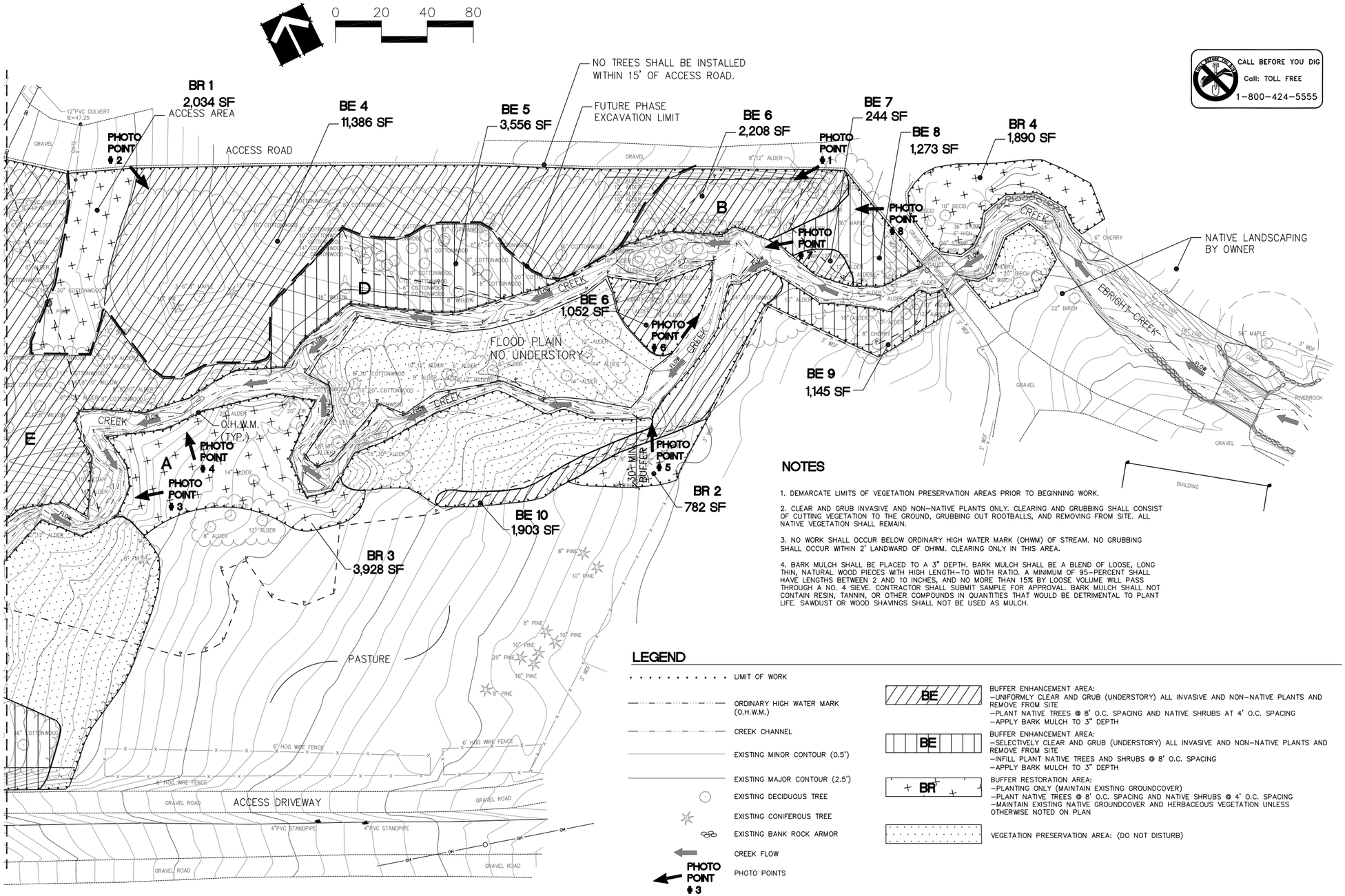

NOTES

1. DEMARCATE LIMITS OF VEGETATION PRESERVATION AREAS PRIOR TO BEGINNING WORK.

2. CLEAR AND GRUB INVASIVE AND NON-NATIVE PLANTS ONLY. CLEARING AND GRUBBING SHALL CONSIST OF CUTTING VEGETATION TO THE GROUND, GRUBBING OUT ROOTBALLS, AND REMOVING FROM SITE. ALL NATIVE VEGETATION SHALL REMAIN.

3. NO WORK SHALL OCCUR BELOW ORDINARY HIGH WATER MARK (OHWM) OF STREAM. NO GRUBBING SHALL OCCUR WITHIN 2' LANDWARD OF OHWM. CLEARING ONLY IN THIS AREA.

4. BARK MULCH SHALL BE PLACED TO A 3" DEPTH. BARK MULCH SHALL BE A BLEND OF LOOSE, LONG THIN, NATURAL WOOD PIECES WITH HIGH LENGTH-TO WIDTH RATIO. A MINIMUM OF 95-PERCENT SHALL HAVE LENGTHS BETWEEN 2 AND 10 INCHES, AND NO MORE THAN 15% BY LOOSE VOLUME WILL PASS THROUGH A NO. 4 SIEVE. CONTRACTOR SHALL SUBMIT SAMPLE FOR APPROVAL. BARK MULCH SHALL NOT CONTAIN RESIN, TANNIN, OR OTHER COMPOUNDS IN QUANTITIES THAT WOULD BE DETRIMENTAL TO PLANT LIFE. SAWDUST OR WOOD SHAVINGS SHALL NOT BE USED AS MULCH.

LEGEND

- LIMIT OF WORK
- ORDINARY HIGH WATER MARK (O.H.W.M.)
- CREEK CHANNEL
- EXISTING MINOR CONTOUR (0.5')
- EXISTING MAJOR CONTOUR (2.5')
- EXISTING DECIDUOUS TREE
- EXISTING CONIFEROUS TREE
- EXISTING BANK ROCK ARMOR
- CREEK FLOW
- PHOTO POINT #3 — PHOTO POINTS
- BE — BUFFER ENHANCEMENT AREA:
  - UNIFORMLY CLEAR AND GRUB (UNDERSTORY) ALL INVASIVE AND NON-NATIVE PLANTS AND REMOVE FROM SITE
  - PLANT NATIVE TREES @ 8' O.C. SPACING AND NATIVE SHRUBS AT 4' O.C. SPACING
  - APPLY BARK MULCH TO 3" DEPTH
- BE — BUFFER ENHANCEMENT AREA:
  - SELECTIVELY CLEAR AND GRUB (UNDERSTORY) ALL INVASIVE AND NON-NATIVE PLANTS AND REMOVE FROM SITE
  - INFILL PLANT NATIVE TREES AND SHRUBS @ 8' O.C. SPACING
  - APPLY BARK MULCH TO 3" DEPTH
- BR — BUFFER RESTORATION AREA:
  - PLANTING ONLY (MAINTAIN EXISTING GROUNDCOVER)
  - PLANT NATIVE TREES @ 8' O.C. SPACING AND NATIVE SHRUBS @ 4' O.C. SPACING
  - MAINTAIN EXISTING NATIVE GROUNDCOVER AND HERBACEOUS VEGETATION UNLESS OTHERWISE NOTED ON PLAN
- VEGETATION PRESERVATION AREA: (DO NOT DISTURB)

DAVID EVANS AND ASSOCIATES INC.

City of Sammamish

Attachment 2B
Vegetation Management Plan

Ebright Creek Enhancement Project
City of Sammamish

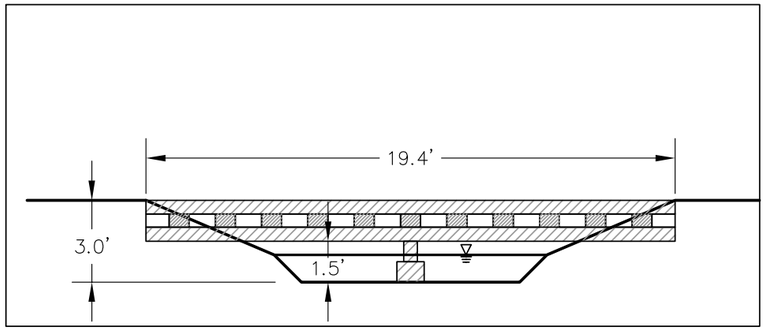

EXISTING BRIDGE

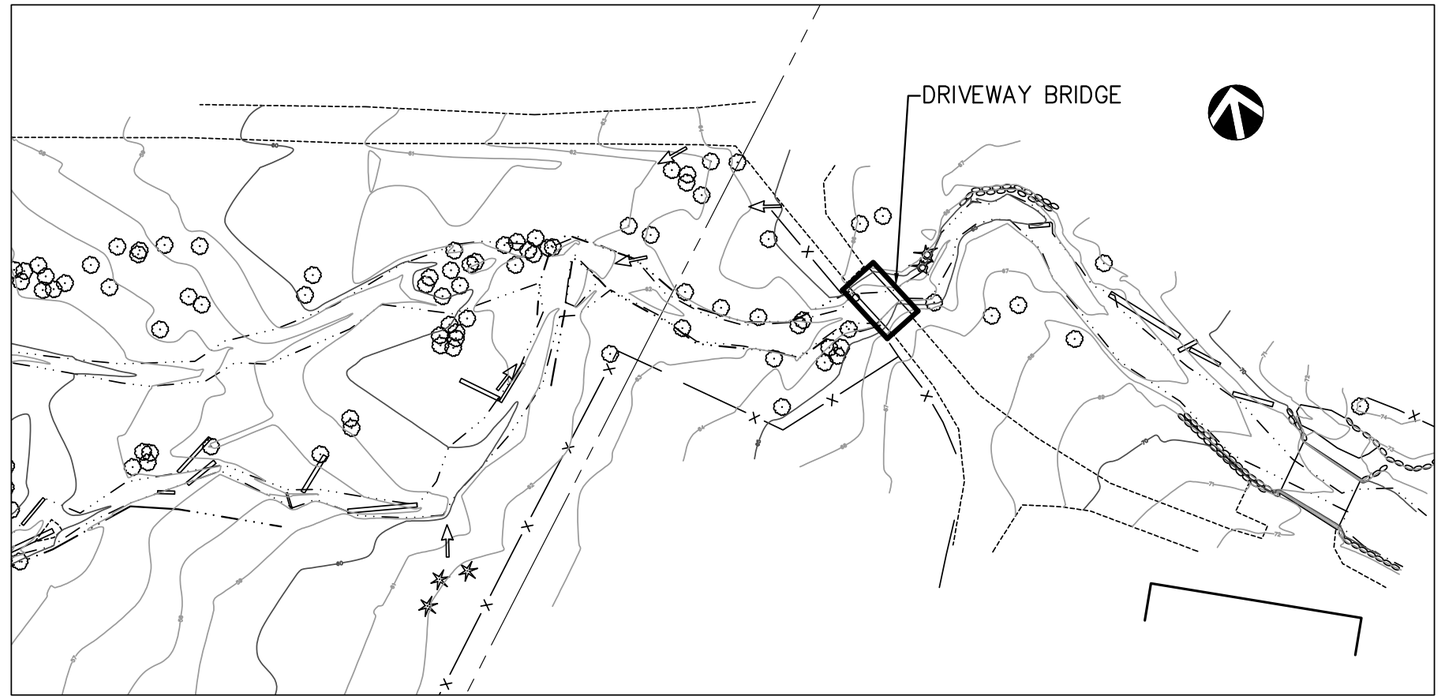

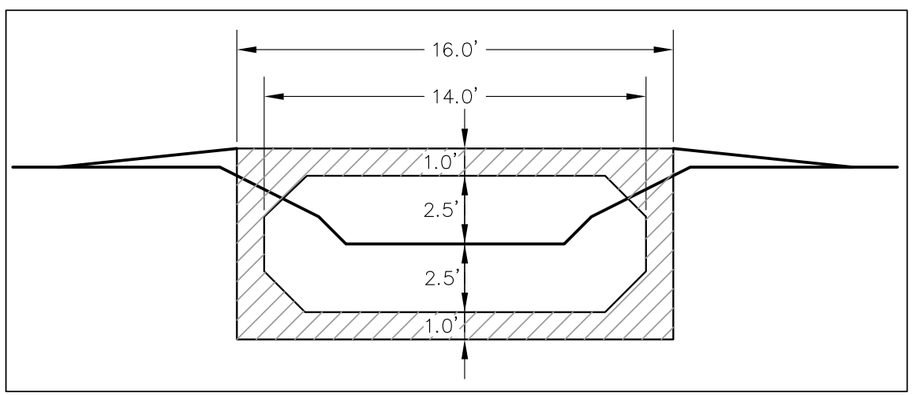

CULVERT OPTION

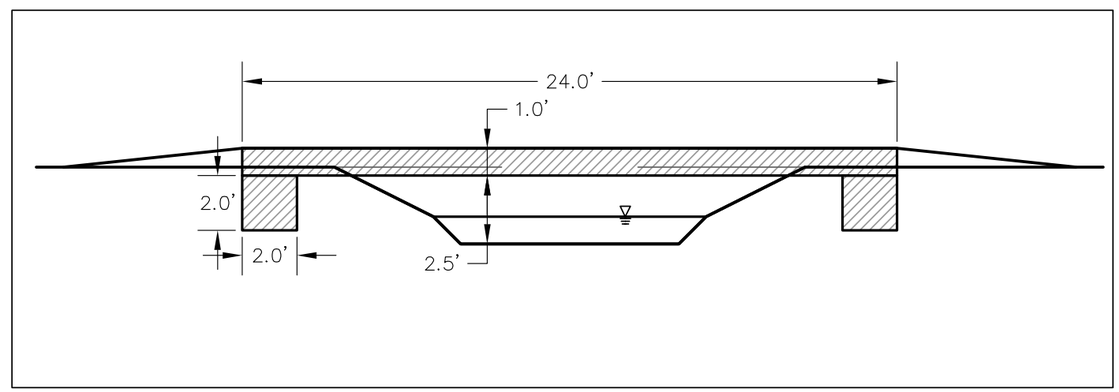

BRIDGE OPTION

DAVID EVANS AND ASSOCIATES INC.

City of Sammamish

Attachment 3A
Culvert Replacement Options

Ebright Creek Enhancement Project
City of Sammamish

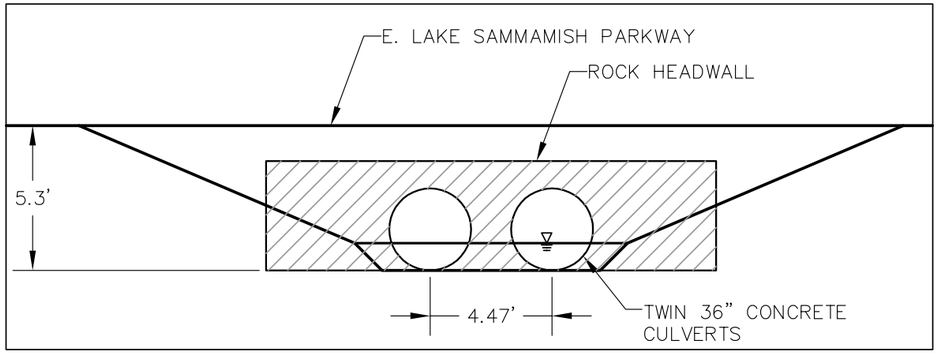

EXISTING CULVERTS

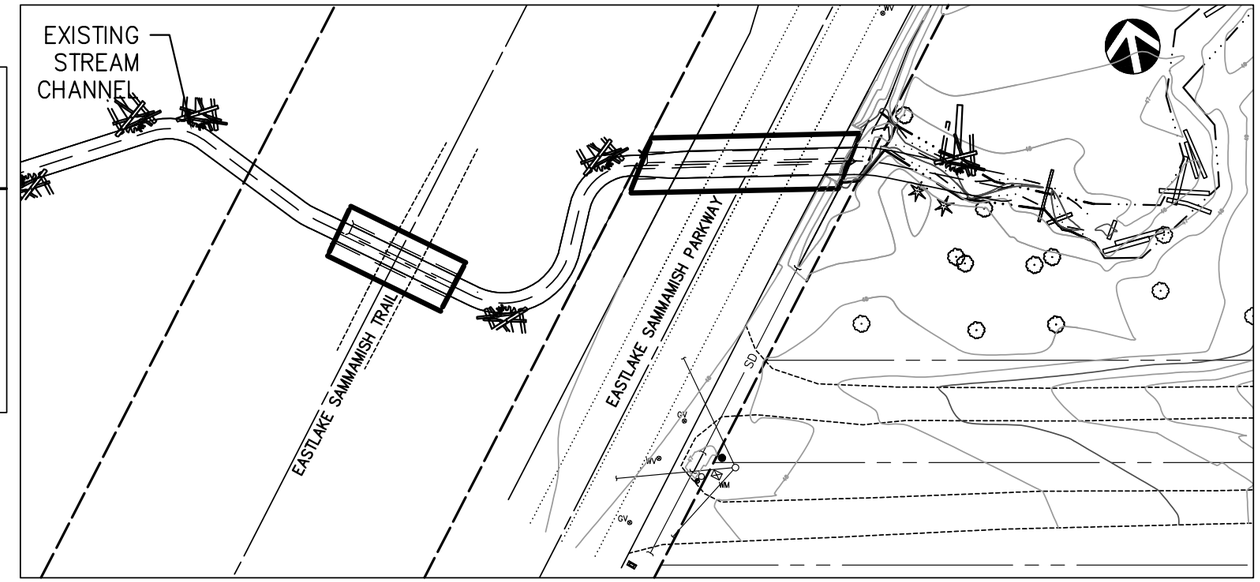

MINIMAL CHANNEL ALTERATION OPTION

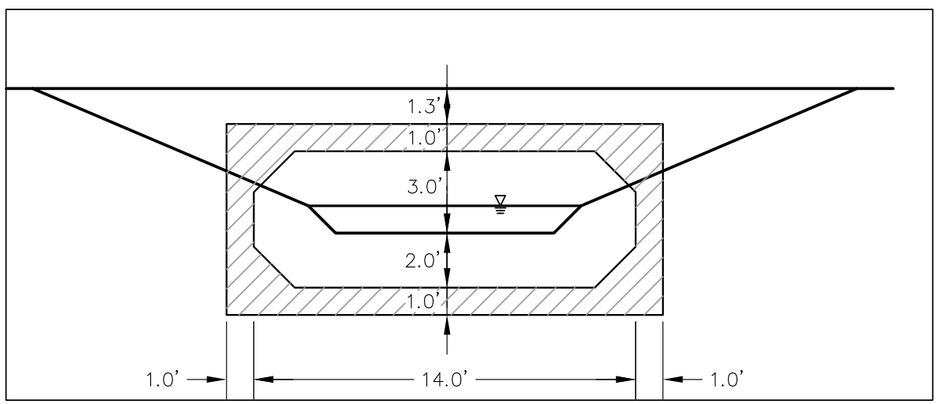

PROPOSED CULVERT

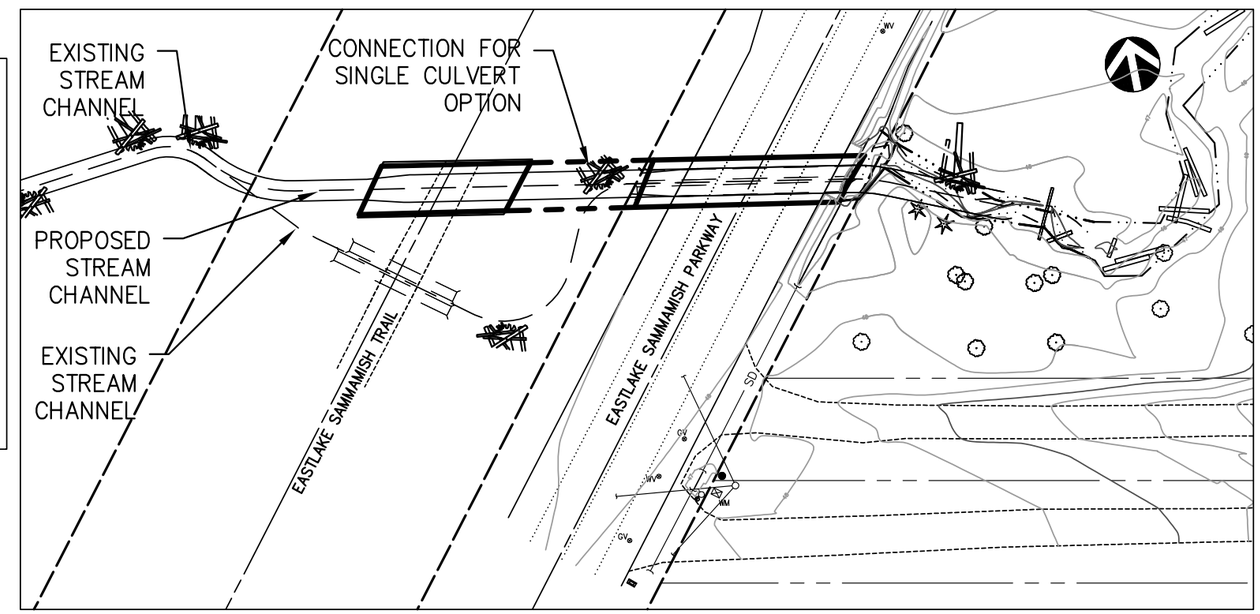

CULVERT/CHANNEL RE-ALIGNMENT WITH SINGLE OR DOUBLE CULVERT OPTIONS

DAVID EVANS AND ASSOCIATES INC.

City of Sammamish

Attachment 3B
Culvert Replacement Options

Ebright Creek Enhancement Project
City of Sammamish

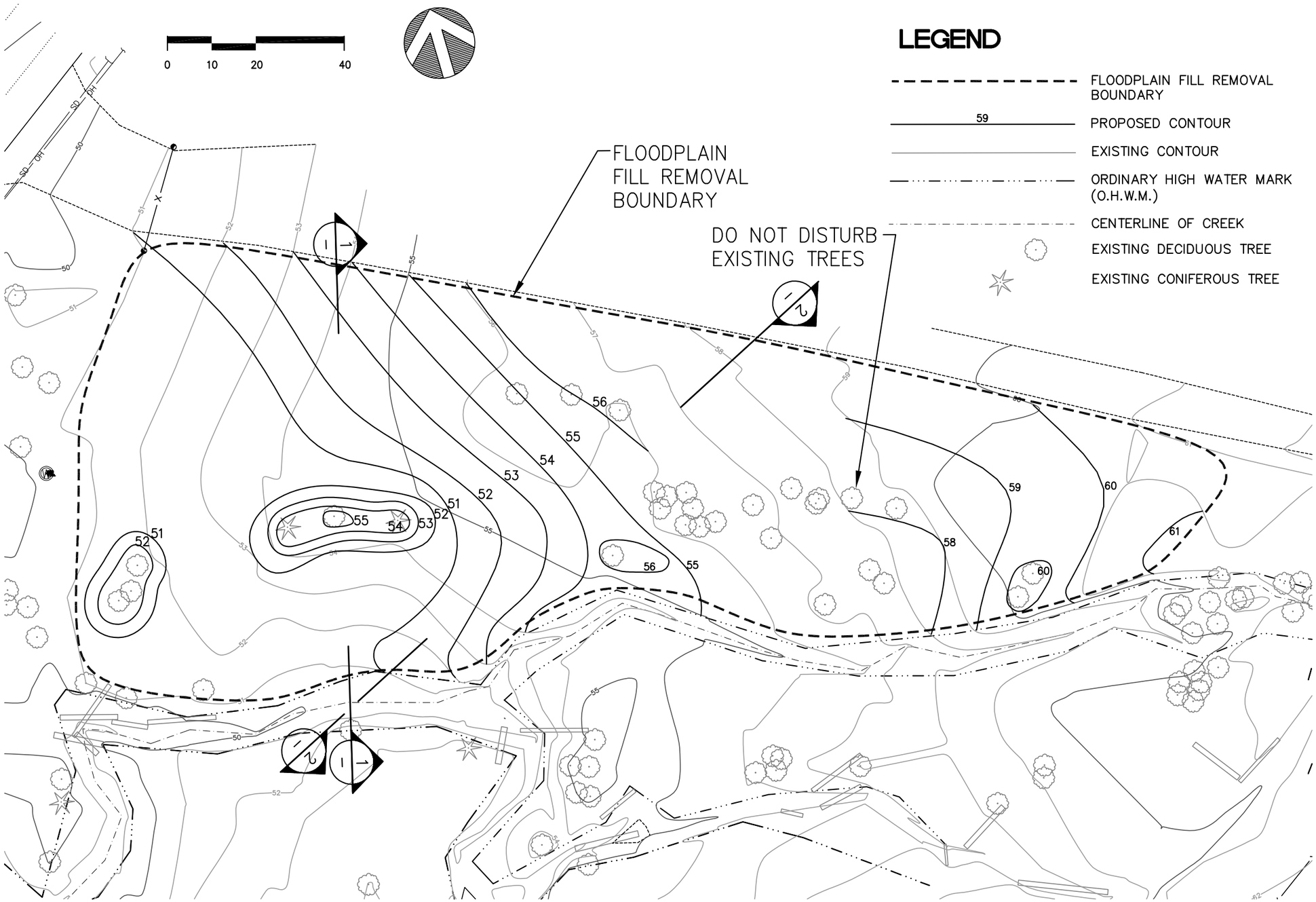

DAVID EVANS AND ASSOCIATES INC.

City of Sammamish Washington

Attachment 4A

Grading Plan for Fill Removal

Ebright Creek Enhancement Project

City of Sammamish

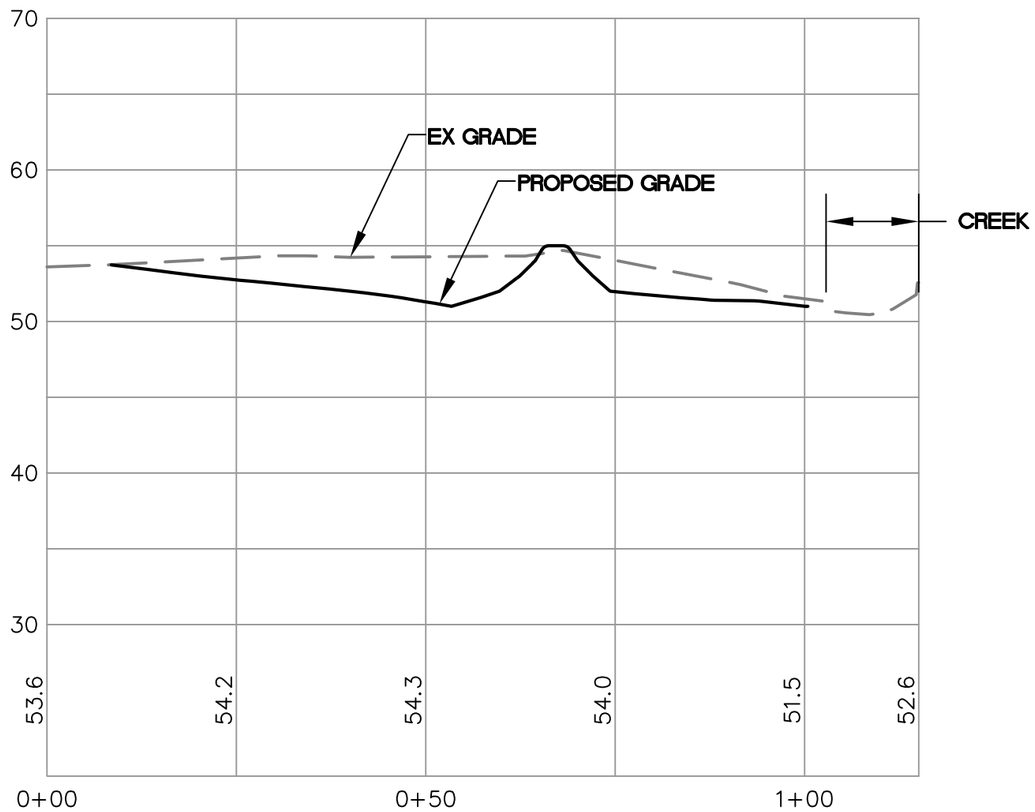

SCALE: V: 1"=10'
H: 1"=20'

FILL REMOVAL SECTION 1-1

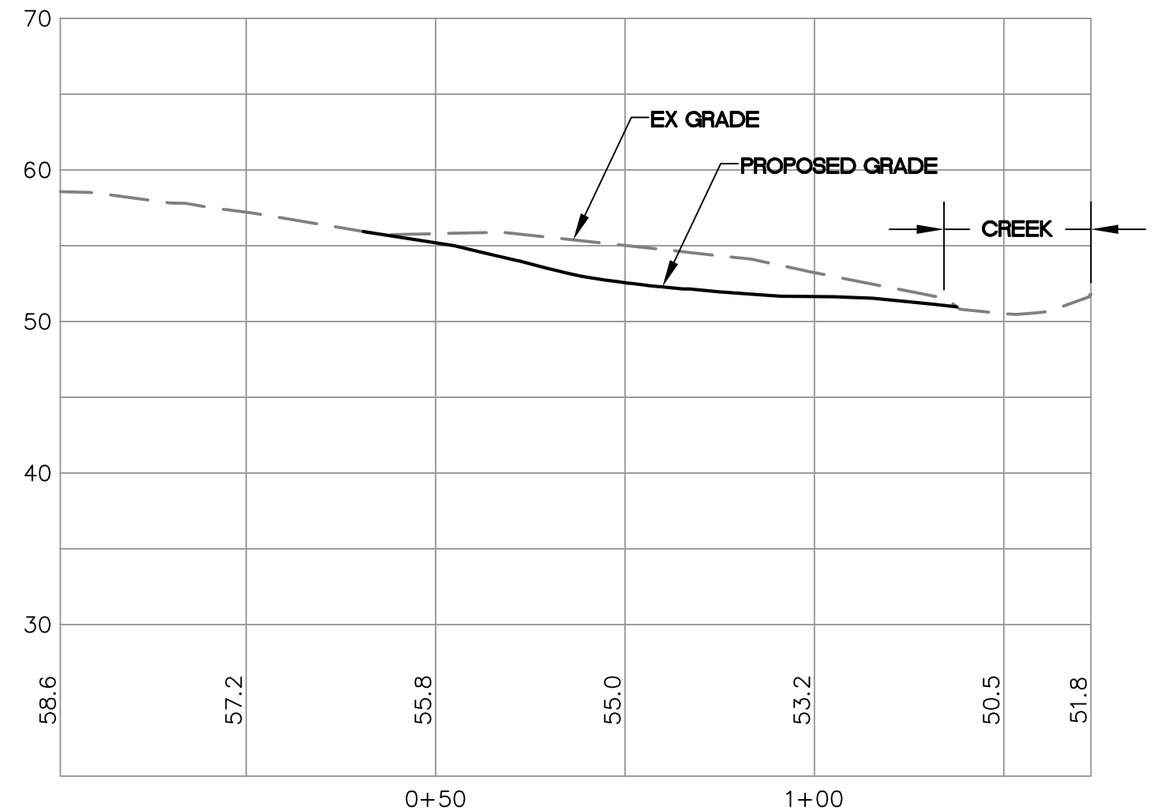

SCALE: V: 1"=10'
H: 1"=20'

FILL REMOVAL SECTION 2-2

DAVID EVANS AND ASSOCIATES INC.

City of Sammamish

Attachment 4B
Grading Plan for Fill Removal

Ebright Creek Enhancement Project
City of Sammamish

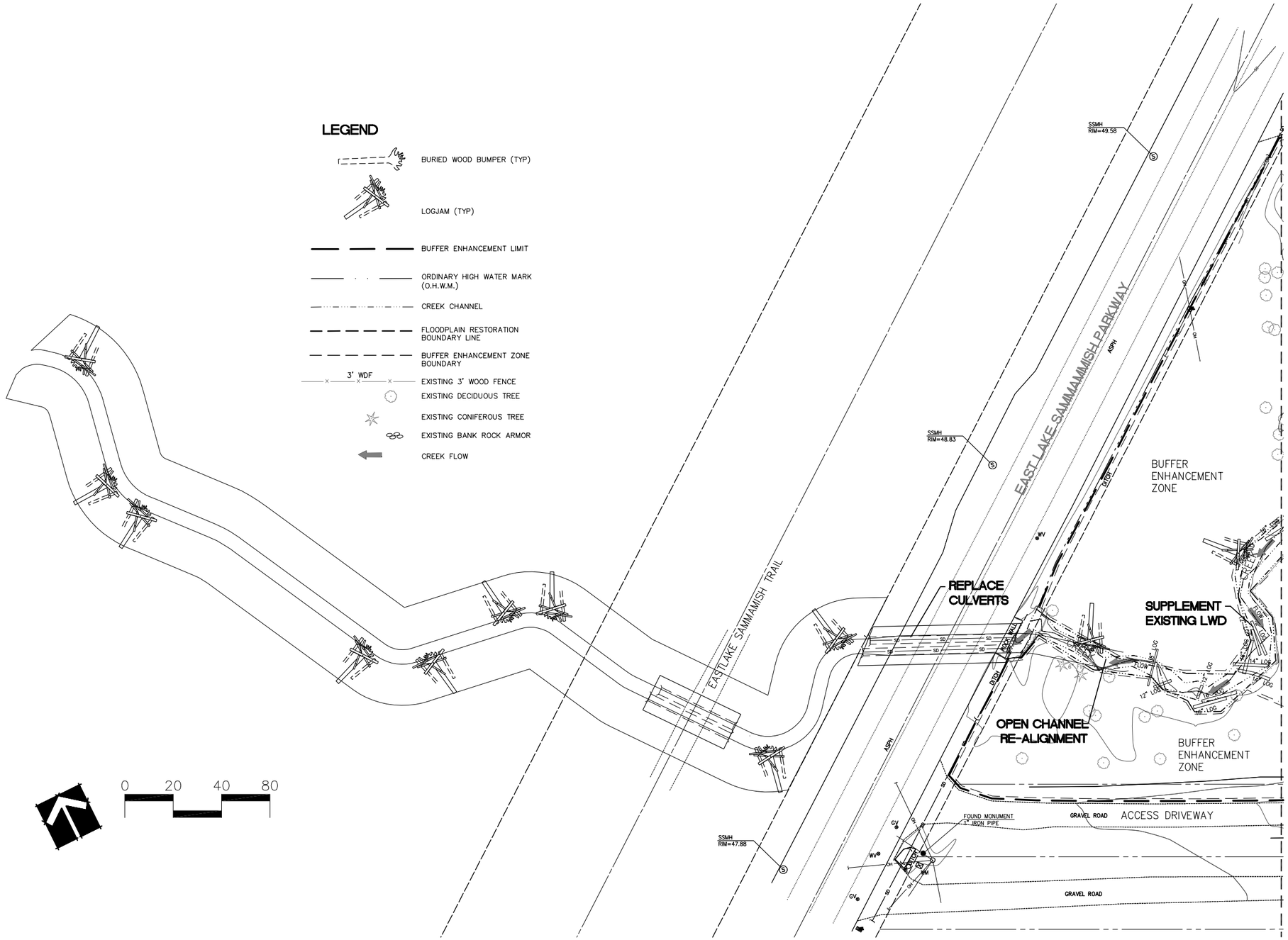

DAVID EVANS AND ASSOCIATES INC.

City of Sammamish

Attachment 5A

Wood Replacement Plan

Ebright Creek Enhancement Project

City of Sammamish

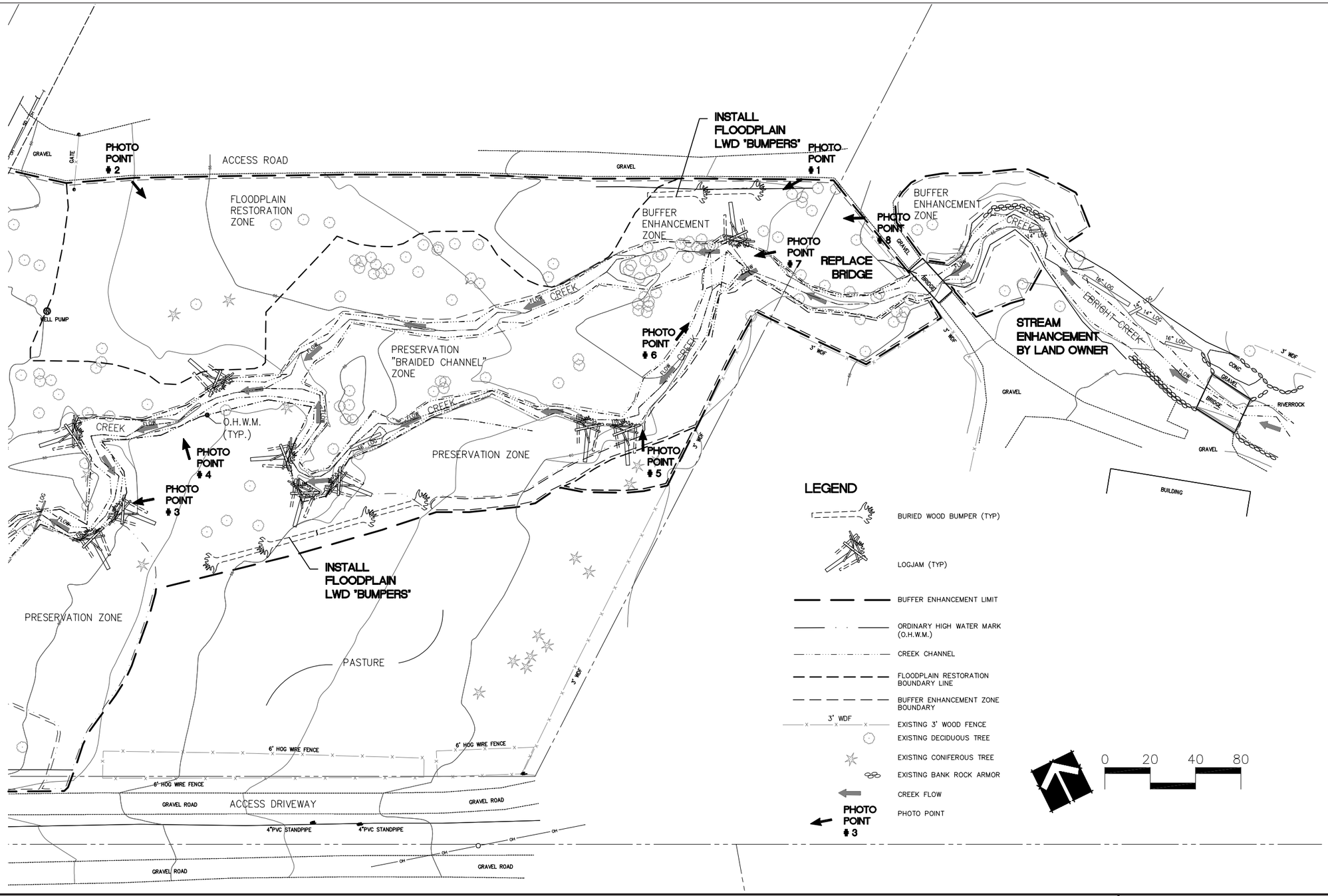

DAVID EVANS AND ASSOCIATES INC.

City of Sammamish

Attachment 5B

Wood Replacement Plan

Ebright Creek Enhancement Project

City of Sammamish

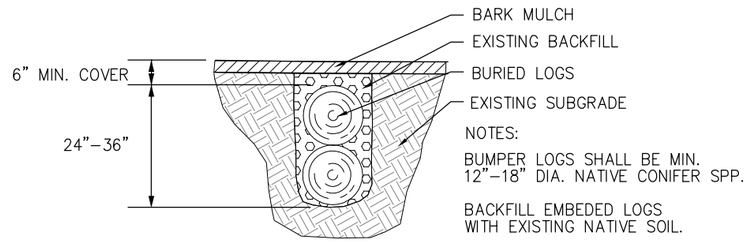

FLOOD PLAIN BUMPER

NTS

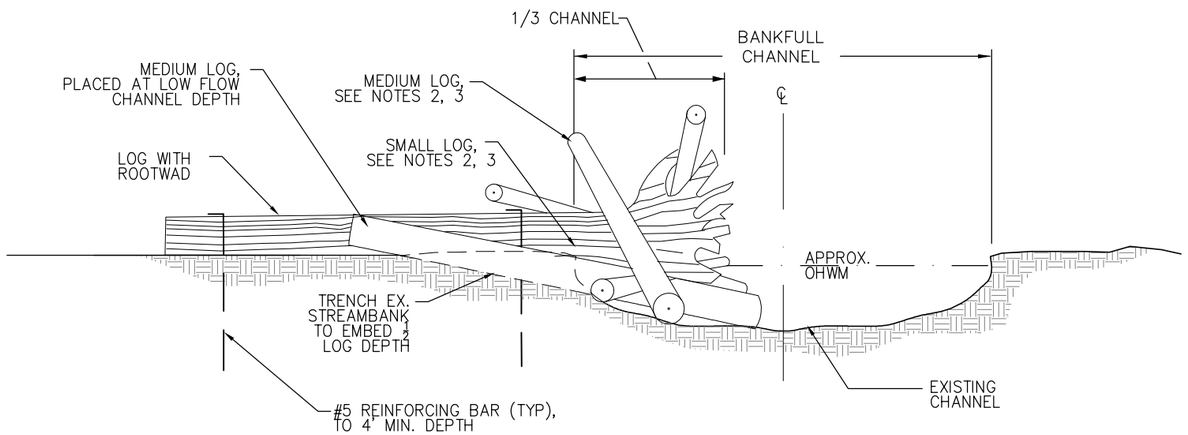

LOGJAM SECTION (TYP) 1

NTS

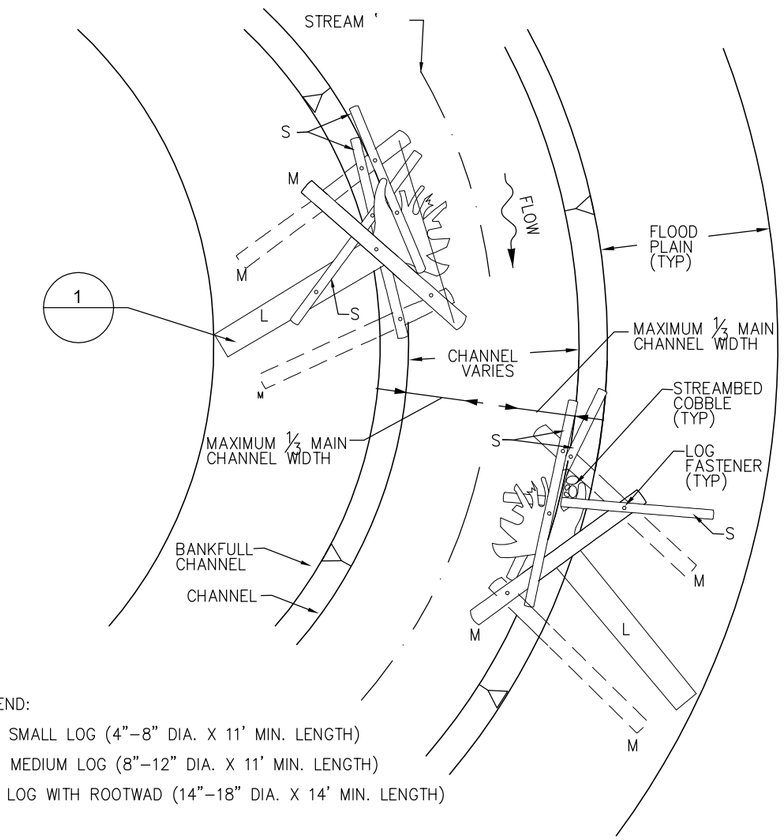

LEGEND:

S = SMALL LOG (4"–8" DIA. X 11' MIN. LENGTH)

M = MEDIUM LOG (8"–12" DIA. X 11' MIN. LENGTH)

L = LOG WITH ROOTWAD (14"–18" DIA. X 14' MIN. LENGTH)

LOGJAM - PLAN (TYP)

NOTES:

1. SEE PLANS FOR LOGJAM LOCATIONS.
2. SECURE ALL SMALL AND MEDIUM LOGS WITH LOG FASTENERS AT TWO POINTS OF CONNECTION.
3. LOGJAMS SHALL APPEAR RANDOM. PLACE SMALL AND MEDIUM LOGS AT APPROXIMATE ANGLES SHOWN IN PLANS. PLACE LOGS WITH ROOTWADS AND MEDIUM LOGS (IN–CHANNEL) AT 40–60 DEGREE ANGLE FROM CHANNEL. FINAL PLACEMENT SUBJECT TO FIELD VERIFICATION BY ENGINEER.

DAVID EVANS AND ASSOCIATES INC.

City of Sammamish

Attachment 5C
Wood Replacement Plan

Ebright Creek Enhancement Project
City of Sammamish

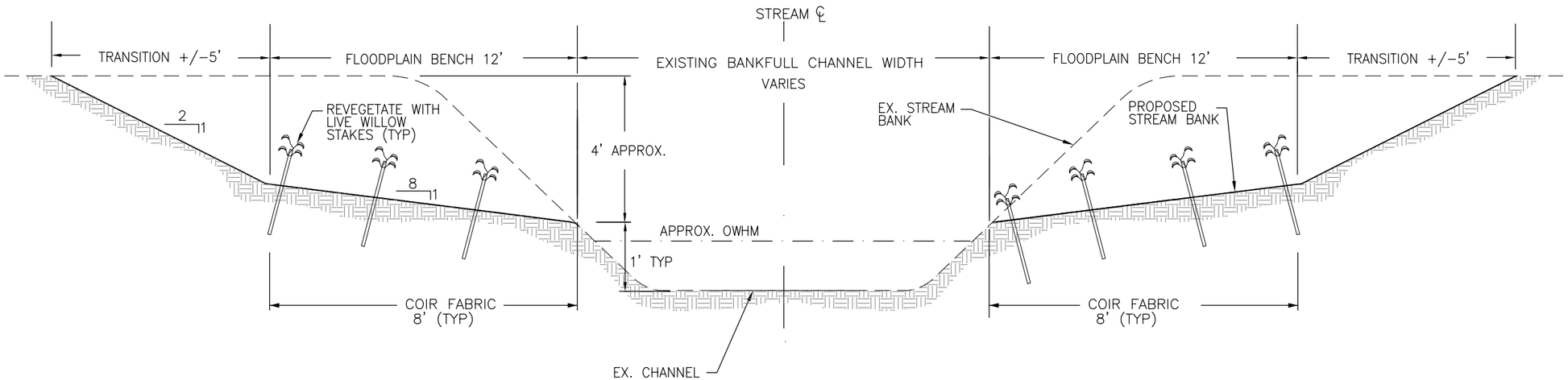

NOTES:

1. PLANT LIVE STAKES IN STAGGERED ROWS ON BOTH SIDES OF FLOODPLAIN.
2. BURY EDGE OF COIR FABRIC AND STAKE WITH WOOD STAKES AT 3' O.C.

TYPICAL SECTION

DAVID EVANS AND ASSOCIATES INC.

City of Sammamish Washington

Attachment 6
Downstream Replacement Details

Ebright Creek Enhancement Project
City of Sammamish