VICINITY MAP

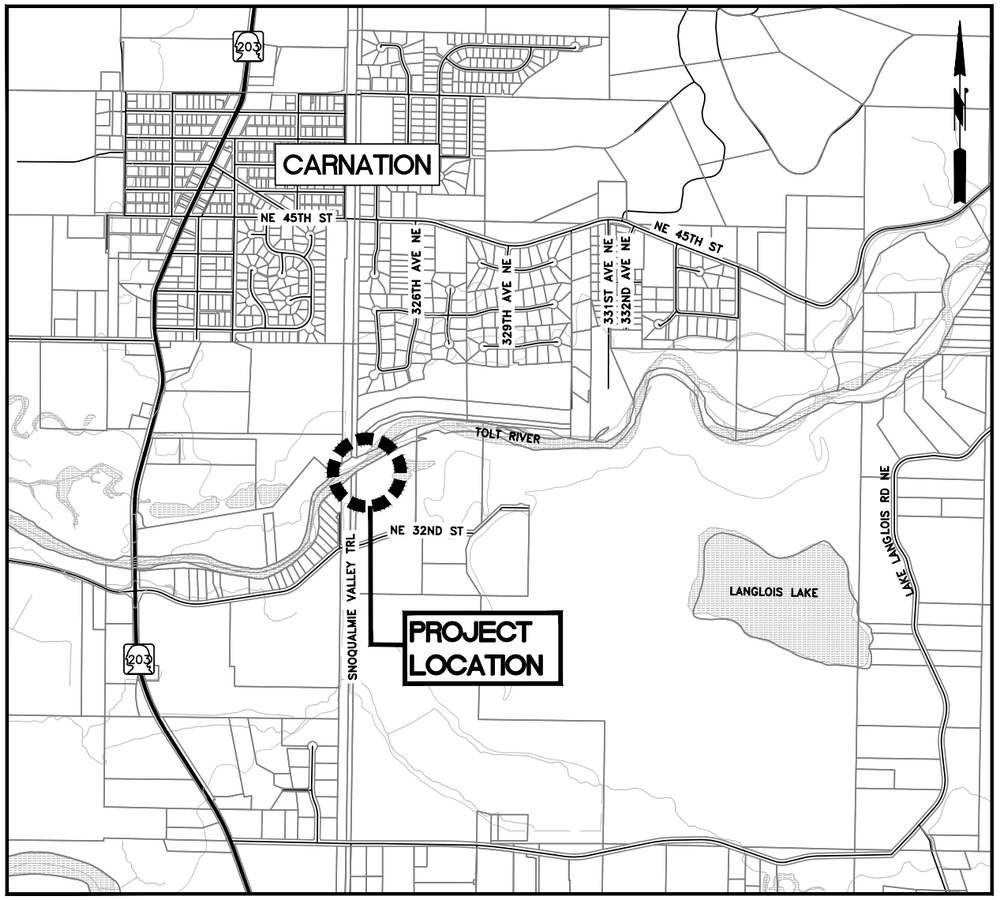

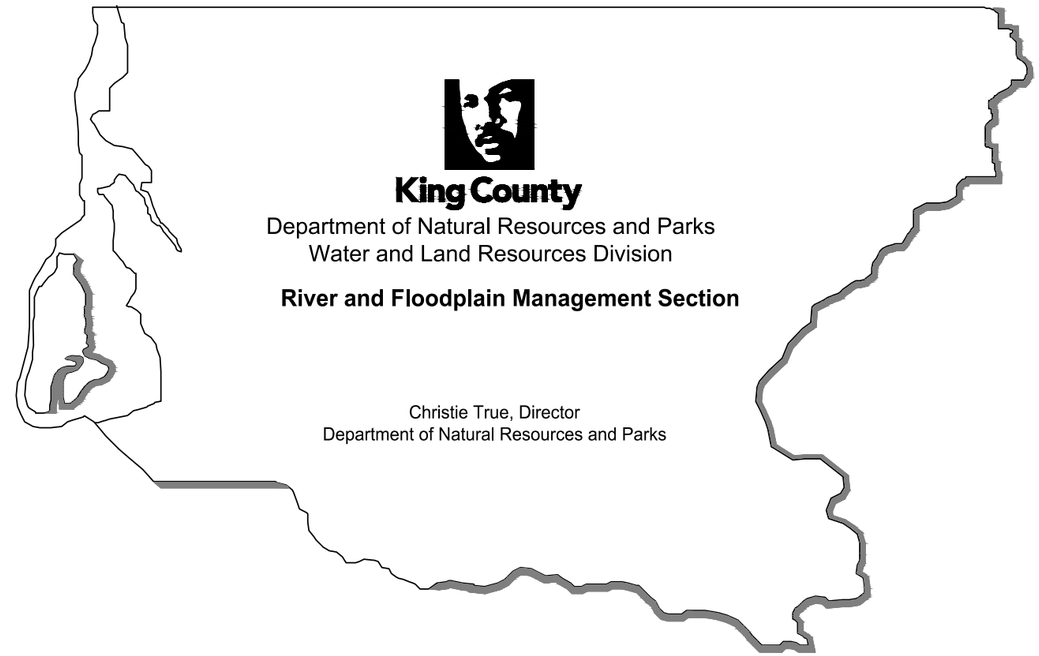

King County
Department of Natural Resources and Parks
Water and Land Resources Division

River and Floodplain Management Section

Christie True, Director
Department of Natural Resources and Parks

REMLINGER LEVEE REPAIR

TOLT RIVER RM 1.15

SHEET INDEX

SHEET	DESCRIPTION
1	VICINITY MAP AND SHEET INDEX
2	ACCESS AND TRAFFIC CONTROL PLAN
3	EXISTING CONDITIONS AND TEMPORARY EROSION AND SEDIMENT CONTROL (TESC) PLAN
4	PROPOSED DESIGN PLAN
5	TYPICAL SECTIONS
6	DETAILS AND SURVEY NOTES

Know what's below.
Call before you dig.
(UNDERGROUND UTILITY LOCATIONS ARE APPROX.)

FIELD BOOK:	1521–288	1/2018
SURVEYED:	PARAMETRIX	1/2018
SURVEY BASE MAP:	KDB/JNM	1/2018
CHECKED:	JNM/RWP	1/2018

NUM.	REVISION	BY	DATE
	30% PRELIMINARY DESIGN 04/10/2018		

NUM.	RECORD CHANGES APPROVED	BY	DATE

APPROVED:	MARK RUEBEL, P.E.	04/2018
PROJECT MANAGER:	STELLA TORRES	04/2018
DESIGNED:	MARK BEGGS, P.E.	04/2018
REVIEWED:	MARK RUEBEL, PE	04/2018
CAD DESIGN:	OLIVIA WRIGHT	04/2018

FUNDING SOURCE No.
PROJECT No. 1132631
CONTRACT No.

MARK W. RUEBEL, STATE OF WASHINGTON, 46867, REGISTERED PROFESSIONAL ENGINEER — DRAFT

MARK R. BEGGS, STATE OF WASHINGTON, 54258, REGISTERED PROFESSIONAL ENGINEER — DRAFT

King County
Department of Natural Resources and Parks
Water and Land Resources Division
River and Floodplain Management Section
Christie True, Director

REMLINGER LEVEE REPAIR

VICINITY MAP AND SHEET INDEX

SHEET 1 OF 6 SHEETS

G:\FLOOD\Flood Drive Files\StrikeTm\Remlinger2018\Design\Drawings\SHEET_DWG\01-Cover_REM.dwg, 5/8/2018 2:17:10 PM, AutoCAD PDF (General Documentation).pc3

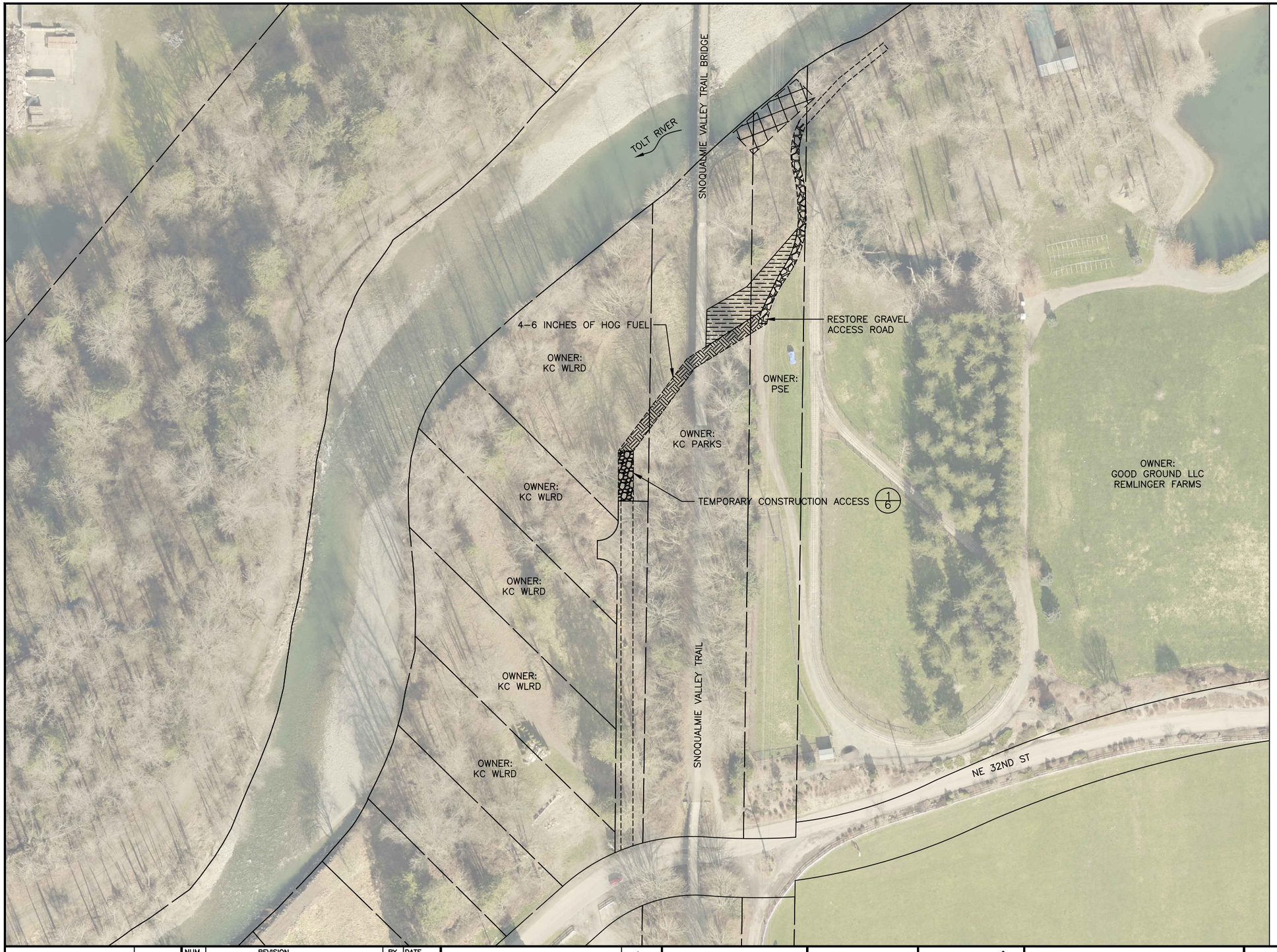

50 0 50 100 150
SCALE IN FEET

N

LEGEND

- DAMAGED AREA
- CONSTRUCTION ACCESS
- CONSTRUCTION STAGING
- GRAVEL ROAD
- TEMP. CONSTRUCTION ENTRANCE
- HOG FUEL
- PARCEL LINES

811
Know what's below.
Call before you dig.
(UNDERGROUND UTILITY LOCATIONS ARE APPROX.)

FIELD BOOK:	1521–288	1/2018
SURVEYED:	PARAMETRIX	1/2018
SURVEY BASE MAP:	KDB/JNM	1/2018
CHECKED:	JNM/RWP	1/2018

NUM.	REVISION	BY	DATE
	30% PRELIMINARY DESIGN 04/10/2018		

NUM.	RECORD CHANGES APPROVED	BY	DATE

APPROVED:	MARK RUEBEL, P.E.	04/2018
PROJECT MANAGER:	STELLA TORRES	04/2018
DESIGNED:	MARK BEGGS, P.E.	04/2018
REVIEWED:	MARK RUEBEL, PE	04/2018
CAD DESIGN:	OLIVIA WRIGHT	04/2018

FUNDING SOURCE No.
PROJECT No. 1132631
CONTRACT No.

MARK R. RUEBEL
STATE OF WASHINGTON
54258
REGISTERED PROFESSIONAL ENGINEER

King County
Department of Natural Resources and Parks
Water and Land Resources Division
River and Floodplain Management Section
Christie True, Director

REMLINGER LEVEE REPAIR

ACCESS AND TRAFFIC CONTROL PLAN

SHEET 2 OF 6 SHEETS

G:\FLOOD\Flood Drive Files\StrikeTm\Remlinger2018\Design\Drawings\SHEET_DWG\02-TRAFFIC_REM.dwg, 5/8/2018 2:17:15 PM, AutoCAD PDF (General Documentation).pc3

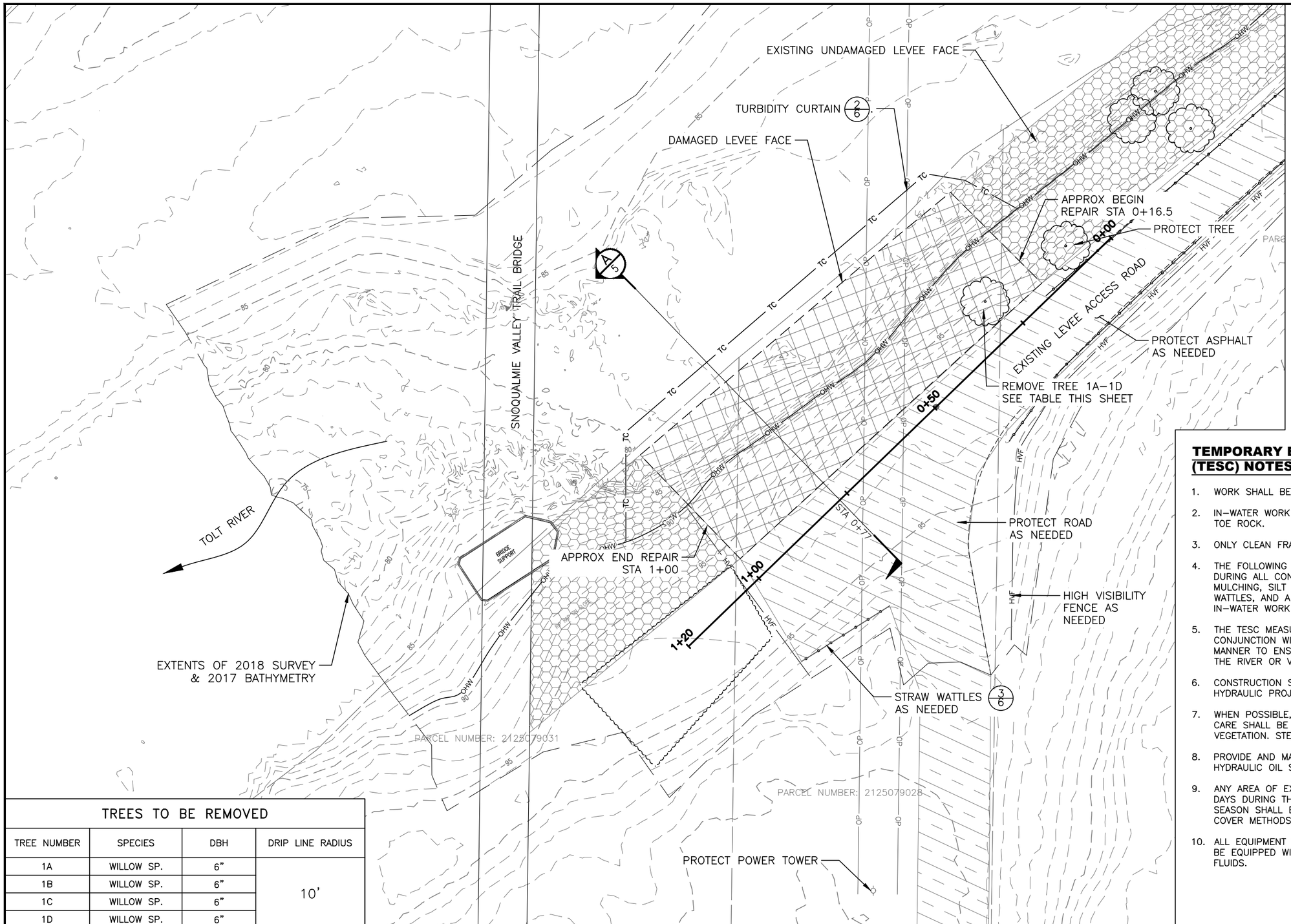

SCALE IN FEET: 10 0 10 20 30

N

LEGEND

- DAMAGED LEVEE FACE
- EXISTING LEVEE FACE
- REBAR W/ CAP FOR SURVEY CONTROL
- DECIDUOUS TREE
- EDGE ASPHALT
- VEGETATION LINE
- CONSTRUCTION STAGING AND ACCESS AREA
- TC — TURBIDITY CURTAIN
- STRAW WATTLE
- HVF — HIGH VISIBILITY FENCE
- OHW — ORDINARY HIGH WATER
- OP — OVERHEAD POWER

TREES TO BE REMOVED

TREE NUMBER	SPECIES	DBH	DRIP LINE RADIUS
1A	WILLOW SP.	6"	10'
1B	WILLOW SP.	6"	
1C	WILLOW SP.	6"	
1D	WILLOW SP.	6"	

TEMPORARY EROSION AND SEDIMENT CONTROL (TESC) NOTES:

1. WORK SHALL BE DONE IN ACCORDANCE WITH ALL APPLICABLE PERMITS.
2. IN–WATER WORK WILL BE LIMITED TO EXCAVATION AND PLACEMENT OF TOE ROCK.
3. ONLY CLEAN FRACTURED ROCK WILL BE PLACED IN WATER.
4. THE FOLLOWING BMPS SHALL BE ON–SITE OR READILY ACCESSIBLE DURING ALL CONSTRUCTION ACTIVITIES: STRAW BALES FOR SLOPE MULCHING, SILT FENCE, HOG FUEL FOR EQUIPMENT ACCESS, STRAW WATTLES, AND A SILT CURTAIN OF SUFFICIENT LENGTH TO ISOLATE IN–WATER WORK AREA
5. THE TESC MEASURES MUST BE INSTALLED AND MAINTAINED IN CONJUNCTION WITH ALL CLEARING AND GRADING ACTIVITIES IN SUCH A MANNER TO ENSURE THAT SEDIMENT LADEN WATER DOES NOT ENTER THE RIVER OR VIOLATE APPLICABLE WATER QUALITY STANDARDS.
6. CONSTRUCTION SHALL BE SCHEDULED CONSISTENT WITH THE WDFW HYDRAULIC PROJECT APPROVAL CONDITIONS.
7. WHEN POSSIBLE, NATIVE VEGETATION SHALL BE LEFT IN PLACE AND CARE SHALL BE TAKEN TO MINIMIZE DAMAGE TO ESTABLISHED VEGETATION. STEEL PLATES SHALL BE USED TO PROTECT TREE ROOTS.
8. PROVIDE AND MAINTAIN A SPILL CLEANUP KIT FOR FUEL AND HYDRAULIC OIL SPILLS.
9. ANY AREA OF EXPOSED SOILS THAT WILL NOT BE DISTURBED FOR TWO DAYS DURING THE WET SEASON OR SEVEN DAYS DURING THE DRY SEASON SHALL BE IMMEDIATELY STABILIZED WITH APPROVED TESC COVER METHODS
10. ALL EQUIPMENT WORKING AT OR BELOW OHW SHALL BE EQUIPPED WITH BIODEGRADABLE HYDRAULIC FLUIDS.

811 Know what's below. Call before you dig.

(UNDERGROUND UTILITY LOCATIONS ARE APPROX.)

FIELD BOOK: 1521–288 1/2018
SURVEYED: PARAMETRIX 1/2018
SURVEY BASE MAP: KDB/JNM 1/2018
CHECKED: JNM/RWP 1/2018

NUM.	REVISION	BY	DATE
	30% PRELIMINARY DESIGN 04/10/2018		

NUM.	RECORD CHANGES APPROVED	BY	DATE

APPROVED: MARK RUEBEL, P.E. 04/2018
PROJECT MANAGER: STELLA TORRES 04/2018
DESIGNED: MARK BEGGS, P.E. 04/2018
REVIEWED: MARK RUEBEL, PE 04/2018
CAD DESIGN: OLIVIA WRIGHT 04/2018

FUNDING SOURCE No.
PROJECT No. 1132631
CONTRACT No.

MARK R. RUEBEL STATE OF WASHINGTON 54258 REGISTERED PROFESSIONAL ENGINEER

King County
Department of Natural Resources and Parks
Water and Land Resources Division
River and Floodplain Management Section
Christie True, Director

REMLINGER LEVEE REPAIR

EXISTING CONDITIONS AND TEMPORARY EROSION AND SEDIMENT CONTROL (TESC) PLAN

SHEET 3 OF 6 SHEETS

G:\FLOOD\Flood Drive Files\StrikeTm\Remlinger2018\Design\Drawings\SHEET_DWG\03-Existing_REM.dwg, 5/8/2018 2:17:28 PM, AutoCAD PDF (General Documentation).pc3

SURVEY CONTROL POINTS				
PT#		NORTHING	EASTING	ELEV.
1002	REBAR	235448.5300	1375760.2700	96.610

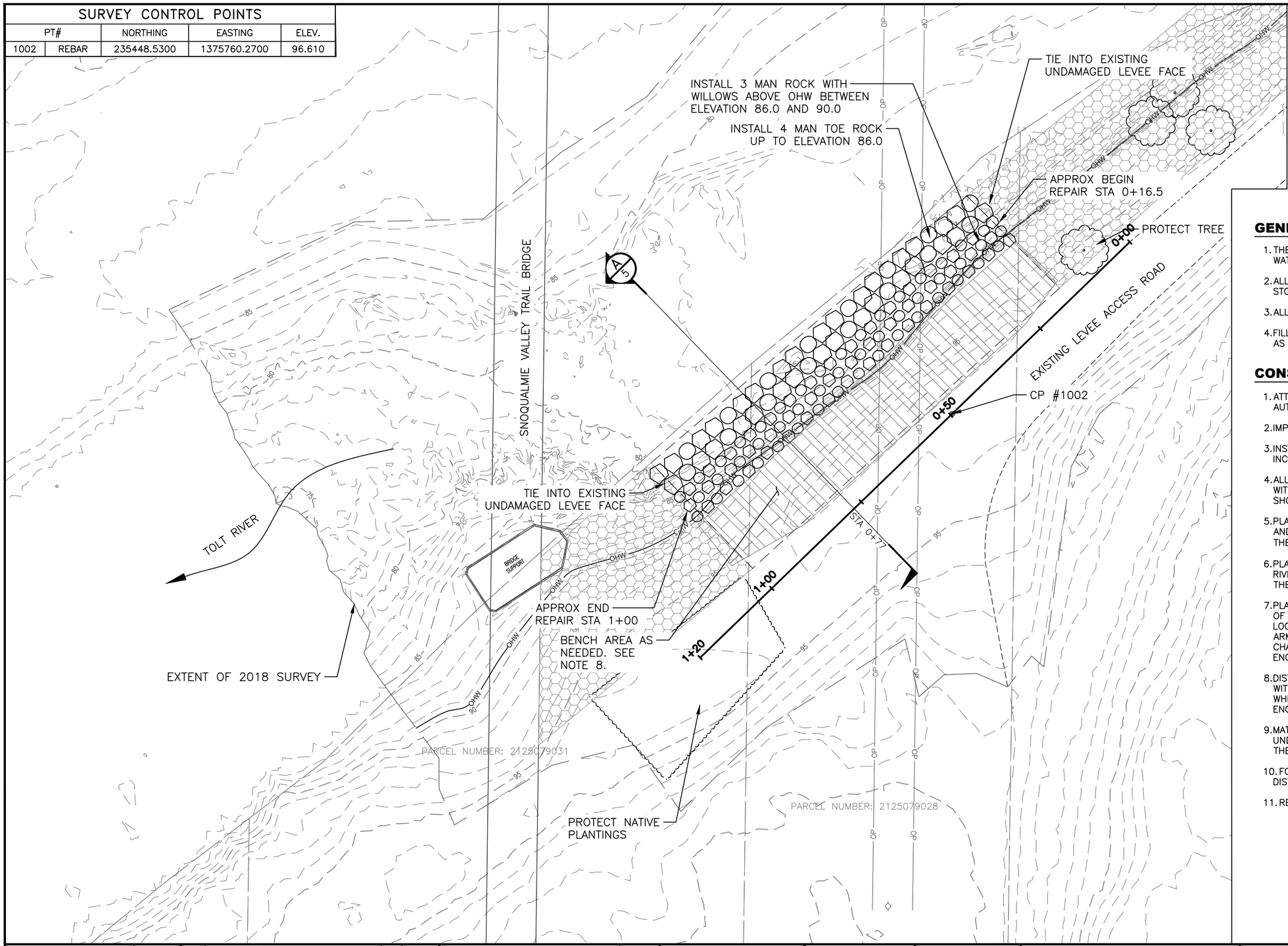

SCALE IN FEET: 10 0 10 20 30

LEGEND

- LARGE ROCK
- OHW — ORDINARY HIGH WATER

GENERAL CONSTRUCTION NOTES:

1. THE DRIVE MECHANISMS OF EQUIPMENT SHALL NOT OPERATE WATERWARD OF THE ORDINARY HIGH WATER LINE.
2. ALL GAS AND OIL CONTAINERS FOR SMALL EQUIPMENT WILL BE STORED SECURELY IN UTILITY VEHICLES.
3. ALL TOE ROCK SHALL BE CLEAN FRACTURED 3–4 MAN ROCK.
4. FILL ALL VOIDS WITH LIGHT LOOSE RIPRAP OR QUARRY SPALLS AS DIRECTED BY THE ENGINEER.

CONSTRUCTION SEQUENCING NOTES:

1. ATTEND PRE–CONSTRUCTION MEETING AND NOTIFY PERMIT AUTHORITIES BEFORE STARTING CONSTRUCTION.
2. IMPLEMENT THE TESC PLAN. SEE SHEET 3.
3. INSTALL SILT CURTAIN PRIOR TO ANY IN–WATER WORK INCLUDING EXCAVATION OR PLACING OF ROCK IN THE WATER.
4. ALL FILL IS TO BE PLACED WITHIN PRE–DAMAGE LEVEE PRISM, WITHIN 1.5H:1V LEVEE SLOPE BELOW EXISTING CREST AS SHOWN.
5. PLACE CLEAN FOUR MAN ROCK AS SHOWN ON EXISTING BED AND BANKS. ENGINEER WILL FIELD DIRECT THE ALIGNMENT OF THE BOTTOM COURSE OF ROCK (TOE ROCK). .
6. PLACE TOE ROCK WITH LONGEST DIMENSION PARALLEL TO THE RIVER AND PLACE TO MINIMIZE POTENTIAL FOR ROLLING. EMBED THE TOE ROCK 3 FEET MINIMUM DEEP INTO RIVERBANK.
7. PLACE LIGHT LOOSE RIPRAP BEDDING AND BACKFILL LANDWARD OF REVETMENT ARMORING ROCK. PLACE ADDITIONAL LIGHT LOOSE RIPRAP TO FILL ANY VOIDS IN THE REVETMENT ARMORING ROCK. DO NOT EXTEND THE TOE FURTHER INTO THE CHANNEL BEYOND THE TOE ALIGNMENT STAKED BY THE ENGINEER.
8. DISTURBED UPPER AREAS AND VOIDS SHALL BE BACKFILLED WITH LIGHT LOOSE RIPRAP AND WILLOW STAKES INSTALLED WHERE VEGETATION REMOVED AT THE DIRECTION OF THE FIELD ENGINEER.
9. MATCH REPAIRED BANK TO THE SLOPE OF THE ADJACENT UNDAMAGED PORTIONS OF THE REVETMENT AT EITHER END OF THE REPAIR.
10. FOLLOWING CONSTRUCTION, REMOVE TESC FEATURES AND SEED DISTURBED AREAS.
11. REPAIR ANY DAMAGES TO ACCESS ROAD AND TRAIL.

811
Know what's below.
Call before you dig.
(UNDERGROUND UTILITY LOCATIONS ARE APPROX.)

FIELD BOOK:	1521–288	1/2018
SURVEYED:	PARAMETRIX	1/2018
SURVEY BASE MAP:	KDB/JNM	1/2018
CHECKED:	JNM/RWP	1/2018

NUM.	REVISION	BY	DATE
	30% PRELIMINARY DESIGN 04/10/2018		

NUM.	RECORD CHANGES APPROVED	BY	DATE

APPROVED:	MARK RUEBEL, P.E.	04/2018
PROJECT MANAGER:	STELLA TORRES	04/2018
DESIGNED:	MARK BEGGS, P.E.	04/2018
REVIEWED:	MARK RUEBEL, PE	04/2018
CAD DESIGN:	OLIVIA WRIGHT	04/2018

FUNDING SOURCE No.
PROJECT No. 1132631
CONTRACT No.

MARK R. RUEBEL — STATE OF WASHINGTON — 54258 — REGISTERED PROFESSIONAL ENGINEER

DRAFT

King County
Department of Natural Resources and Parks
Water and Land Resources Division
River and Floodplain Management Section
Christie True, Director

REMLINGER LEVEE REPAIR

PROPOSED DESIGN PLAN

SHEET 4 OF 6 SHEETS

G:\FLOOD\Flood Drive Files\StrikeTm\Remlinger2018\Design\Drawings\SHEET_DWG\04-PROPOSED_REM.dwg, 5/8/2018 2:17:38 PM, AutoCAD PDF (General Documentation).pc3

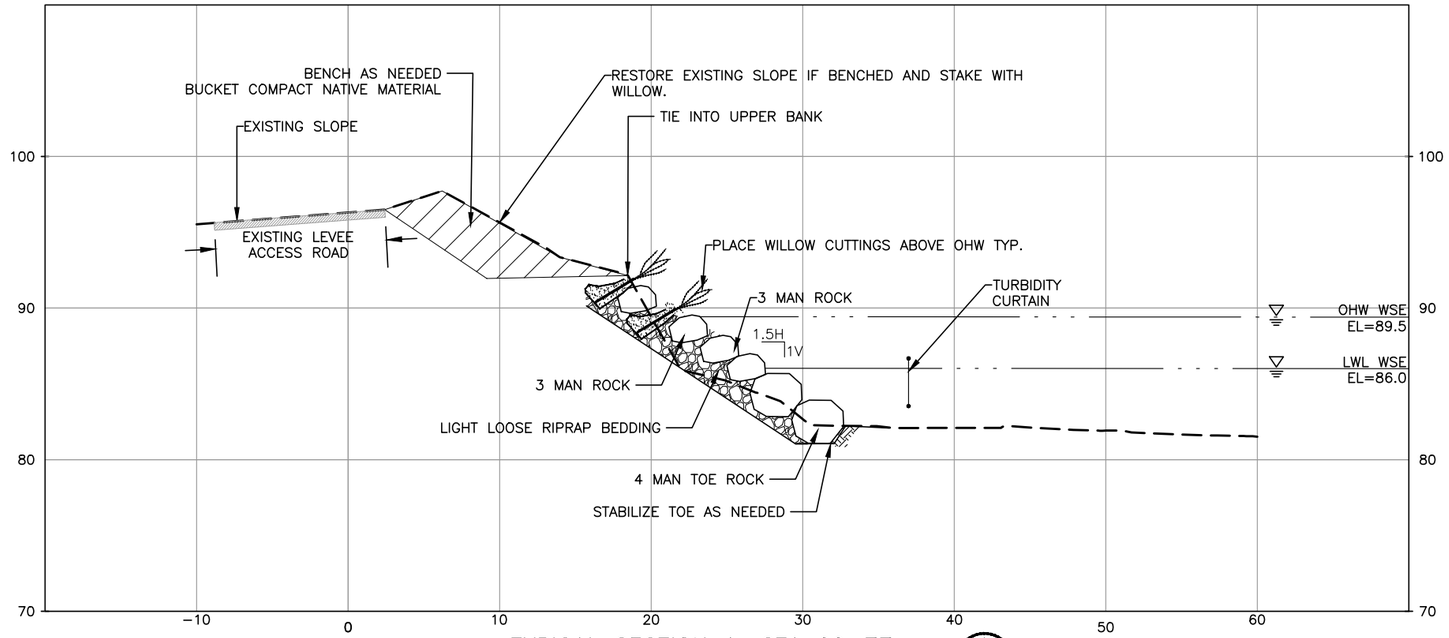

TYPICAL SECTION A, STA 00+77 (A 3, 4)

1"=10'

WILLOW CUTTING NOTES:

1. USE HEALTHY LIVE WOOD THAT IS AT LEAST ONE YEAR OLD.
2. MAKE A CLEAN ANGULAR CUT AT THE BUTT END WHEN HARVESTING WILLOW CUTTINGS.
3. CUTTINGS SHOULD BE 6'–8' LONG, AND A MINIMUM OF 1" DIAMETER. CUTTINGS CAN BE BRUSHY WITH SIDE BRANCHES.
4. PRIOR TO INSTALLATION, SOAK CUTTINGS (MINIMUM OF 1' DEPTH AT BUTT END) IN WATER FOR A MINIMUM OF 24 HOURS.
5. MAINTAIN CUTTINGS IN WATER CONTINUOUSLY FROM TIME OF HARVEST UNTIL INSTALLATION IN MIN. 1' DEPTH WATER AT BUTT END.

WILLOW CUTTING INSTALLATION:

1. IF NECESSARY FILL ANY LARGE GAPS IN THE PREVIOUS ROCK LAYER WITH LIGHT LOOSE.
2. HAVE A WATER TRUCK OR WITHDRAWAL PUMP (ONLY IF WITHDRAWAL PERMIT IS IN HAND) ON SITE DURING WILLOW INSTALLATION.
3. FOR THE LOWEST WILLOW LIFT, PLACE COIR FABRIC OVER THE ROCK LAYER WITH AT LEAST 5 FEET OF EXCESS FABRIC EXTENDING LANDWARD.
4. PLACE 6 INCH LIFT OF TOP SOIL WITH WILLOW CUTTINGS SPACED 1 PER LINEAR FOOT OVER THE FABRIC AND FOLD THE FABRIC OVER THE FRONT OF THE SOIL LIFT.
5. WATER THE SOIL THOROUGHLY; SATURATE SOIL TO 6 INCH DEPTH AND MUDDY.

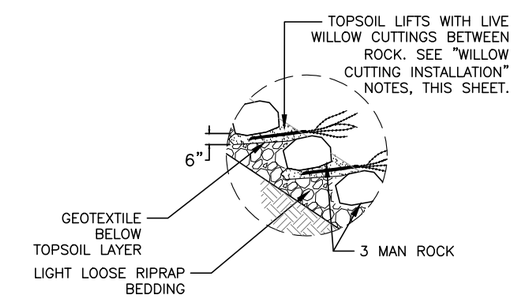

WILLOW DETAIL

SCALE 1" = 4'

Know what's below.
Call before you dig.
(UNDERGROUND UTILITY LOCATIONS ARE APPROX.)

FIELD BOOK: 1521–288	1/2018		
SURVEYED: PARAMETRIX	1/2018		
SURVEY BASE MAP: KDB/JNM	1/2018		
CHECKED: JNM/RWP	1/2018		

NUM.	REVISION	BY	DATE
	30% PRELIMINARY DESIGN 04/10/2018		
NUM.	RECORD CHANGES APPROVED	BY	DATE

APPROVED:	MARK RUEBEL, P.E.	04/2018
PROJECT MANAGER:	STELLA TORRES	04/2018
DESIGNED:	MARK BEGGS, P.E.	04/2018
REVIEWED:	MARK RUEBEL, PE	04/2018
CAD DESIGN:	OLIVIA WRIGHT	04/2018

FUNDING SOURCE No.

PROJECT No. 1132631

CONTRACT No.

MARK R. RUEBEL, STATE OF WASHINGTON, 54238, REGISTERED PROFESSIONAL ENGINEER

King County
Department of Natural Resources and Parks
Water and Land Resources Division
River and Floodplain Management Section
Christie True, Director

REMLINGER LEVEE REPAIR

TYPICAL SECTIONS

SHEET 5 OF 6 SHEETS

G:\FLOOD\Flood Drive Files\StrikeTm\Remlinger2018\Design\Drawings\SHEET_DWG\05-SECTION_REM.dwg, 5/8/2018 2:17:47 PM, AutoCAD PDF (General Documentation).pc3

SURVEY NOTES:

HORIZONTAL DATUM:
THE HORIZONTAL DATUM FOR THIS SURVEY IS NORTH AMERICAN DATUM OF 1983 ADJUSTMENT 2011 WASHINGTON STATE PLANE COORDINATE SYSTEM, NORTH ZONE BASED ON GPS FIELD SURVEY TO WSDOT MONUMENT DESIGNATION GP17203–40 WITH CONFIRMATION GPS FIELD MEASUREMENTS TO WSDOT MONUMENT DESIGNATIONS GP17203–41

GP17203–40	GP17203–41
N 232759.538	N 235869.938
E 1373789.086	E 1373669.746

VERTICAL DATUM: NAVD88
THE VERTICAL DATUM FOR THIS SURVEY IS BASED ON GPS FIELD SURVEY TO WSDOT MONUMENT DESIGNATION GP17203–40 WITH CONFIRMATION GPS FIELD MEASUREMENT TO WSDOT MONUMENT DESIGNATION GP17203–41.

GP17203–40	GP17203–41
ELEV.= 73.917	ELEV.= 80.023

HYDROGRAPHIC NOTE:
HYDROGRAPHIC SURVEY INFORMATION FOR THIS PROJECT WAS COLLECTED USING A TRIMBLE VX ROBOTIC TOTAL STATION, TRIMBLE R10 GNSS NETWORK RTK SYSTEM, AND A SONARMITE MILLSPEC SINGLE BEAM ECHO SOUNDER.

HYDROGRAPHIC POINTS WERE COLLECTED AT SUFFICIENT SPACING TO ACHIEVE THE REQUIRED CONTOUR INTERVAL AND WERE COLLECTED IN BOTH LONGITUDINAL AND PERPENDICULAR DIRECTIONS ORIENTED TO THE RIVER FLOW AND BANK CONFIGURATION.

SOURCE OF INFORMATION:
- LIDAR FLOWN IN MARCH 2015 QSI
- OHW LOCATED BY KING COUNTY DURING FIELD INVESTIGATION DEC 2017
- LWL PGS SURVEY NOV 2017
- BATHYMETRIC DATA PGS SURVEY FALL 2017
- AERIAL PHOTO 2015

THE TEMPORARY CONSTRUCTION ACCESS SHALL BE MAINTAINED IN A CONDITION WHICH WILL PREVENT TRACKING OR FLOW OF MUD ONTO PUBLIC RIGHT–OF–WAY. THIS MAY REQUIRE PERIODIC TOP DRESSING WITH 2" STONE, AS CONDITIONS DEMAND, AND REPAIR AND/OR CLEAN–OUT OF ANY STRUCTURES USED TO TRAP SEDIMENT. ALL MATERIALS SPILLED, DROPPED, WASHED OR TRACKED FROM VEHICLES ONTO ROADWAYS OR INTO STORM DRAINS MUST BE REMOVED IMMEDIATELY. PROVIDE FLAGGING FOR CONSTRUCTION VEHICLES ENTERING AND LEAVING SITE.

NOTE: A 30' WIDE ROAD MAY BE REQUIRED WHERE A TRUCK WASHER IS LOCATED.

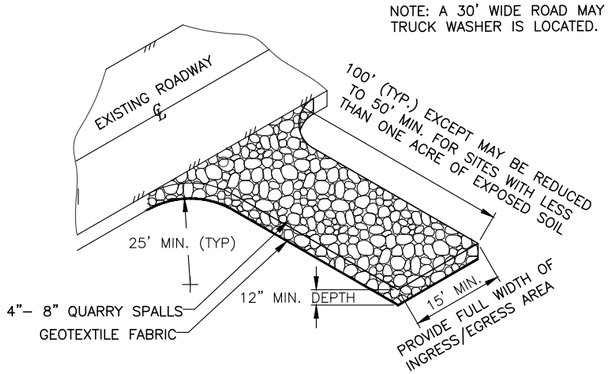

TEMPORARY CONSTRUCTION ACCESS (1/2)
NOT TO SCALE

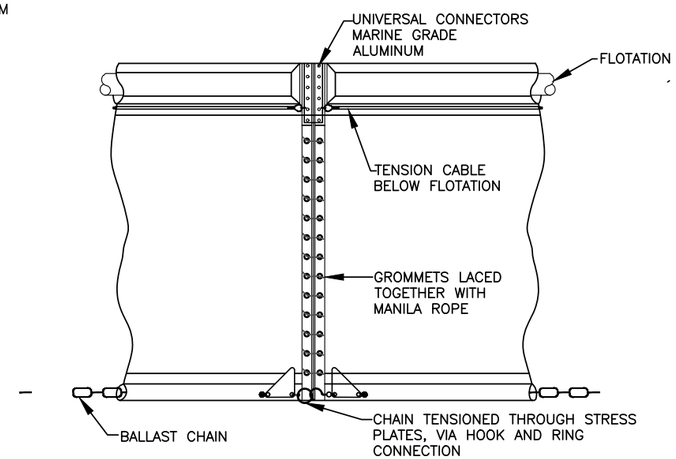

TURBIDITY CURTAIN (2/3)
NOT TO SCALE

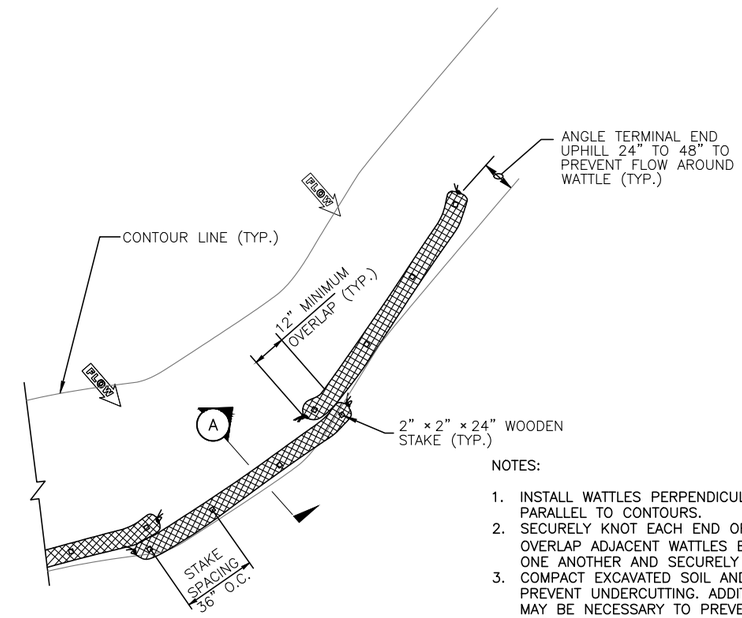

NOTES:

1. INSTALL WATTLES PERPENDICULAR TO FLOW AND PARALLEL TO CONTOURS.
2. SECURELY KNOT EACH END OF WATTLE. OVERLAP ADJACENT WATTLES ENDS 12" BEHIND ONE ANOTHER AND SECURELY TIE TOGETHER.
3. COMPACT EXCAVATED SOIL AND TRENCHES TO PREVENT UNDERCUTTING. ADDITIONAL STAKING MAY BE NECESSARY TO PREVENT UNDERCUTTING.
4. WATTLES SHALL BE INSPECTED REGULARLY, AND IMMEDIATELY AFTER A RAINFALL PRODUCES RUNOFF, TO ENSURE THEY REMAIN THOROUGHLY ENTRENCHED AND IN CONTACT WITH SOIL.
5. A SINGLE ROW OF WATTLES MAY BE USED FOR SLOPES LESS THAN 10% AND SHORTER THAN 100 FT.

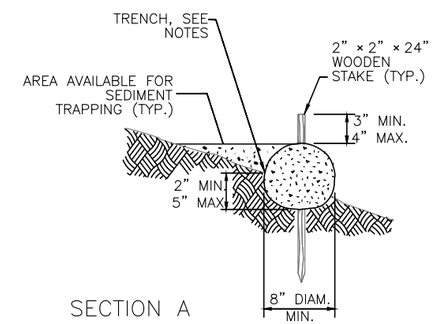

SECTION A

SINGLE ROW WATTLE INSTALLATION DETAIL (3/3)
NOT TO SCALE

Know what's below.
Call before you dig.
(UNDERGROUND UTILITY LOCATIONS ARE APPROX.)

FIELD BOOK:	1521–288	1/2018
SURVEYED:	PARAMETRIX	1/2018
SURVEY BASE MAP:	KDB/JNM	1/2018
CHECKED:	JNM/RWP	1/2018

NUM.	REVISION	BY	DATE
	30% PRELIMINARY DESIGN 04/10/2018		

NUM.	RECORD CHANGES APPROVED	BY	DATE

APPROVED:	MARK RUEBEL, P.E.	04/2018
PROJECT MANAGER:	STELLA TORRES	04/2018
DESIGNED:	MARK BEGGS, P.E.	04/2018
REVIEWED:	MARK RUEBEL, PE	04/2018
CAD DESIGN:	OLIVIA WRIGHT	04/2018

FUNDING SOURCE No.
PROJECT No. 1132631
CONTRACT No.

MARK R. RUEBEL, STATE OF WASHINGTON, 54258, REGISTERED PROFESSIONAL ENGINEER

King County
Department of Natural Resources and Parks
Water and Land Resources Division
River and Floodplain Management Section
Christie True, Director

REMLINGER LEVEE REPAIR

DETAILS AND SURVEY NOTES

SHEET 6 OF 6 SHEETS

G:\FLOOD\Flood Drive Files\StrikeTm\Remlinger2018\Design\Drawings\SHEET_DWG\06-DETAILS_REM.dwg, 5/8/2018 2:17:55 PM, AutoCAD PDF (General Documentation).pc3