VICINITY MAP

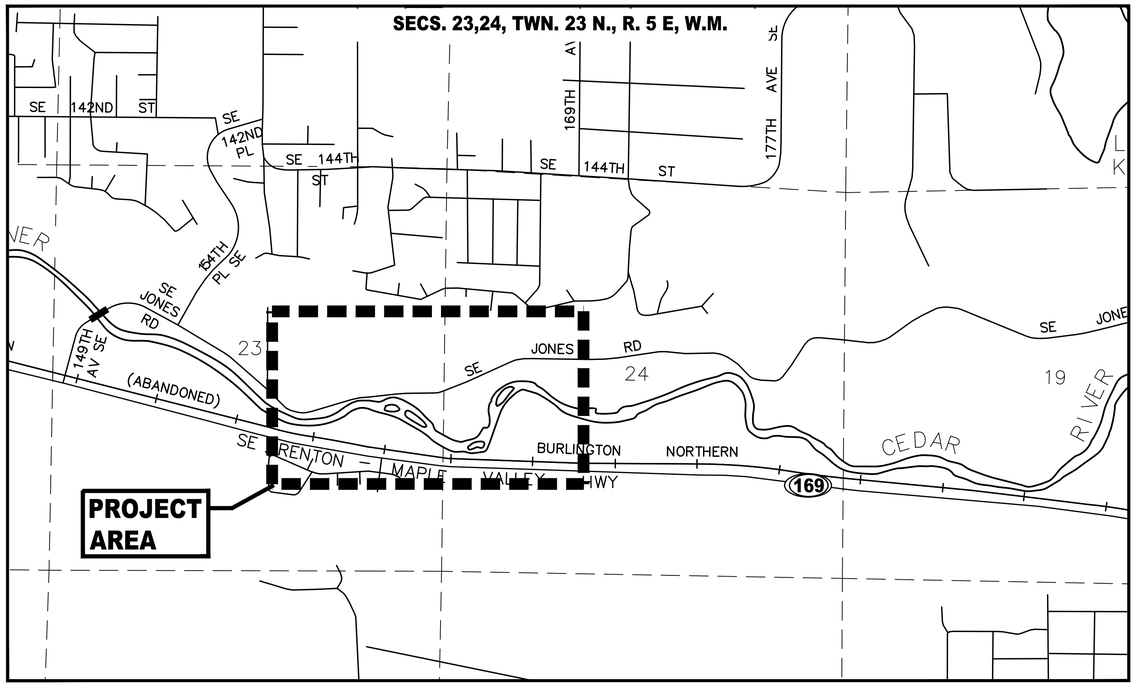

1000 0 1000
SCALE IN FEET

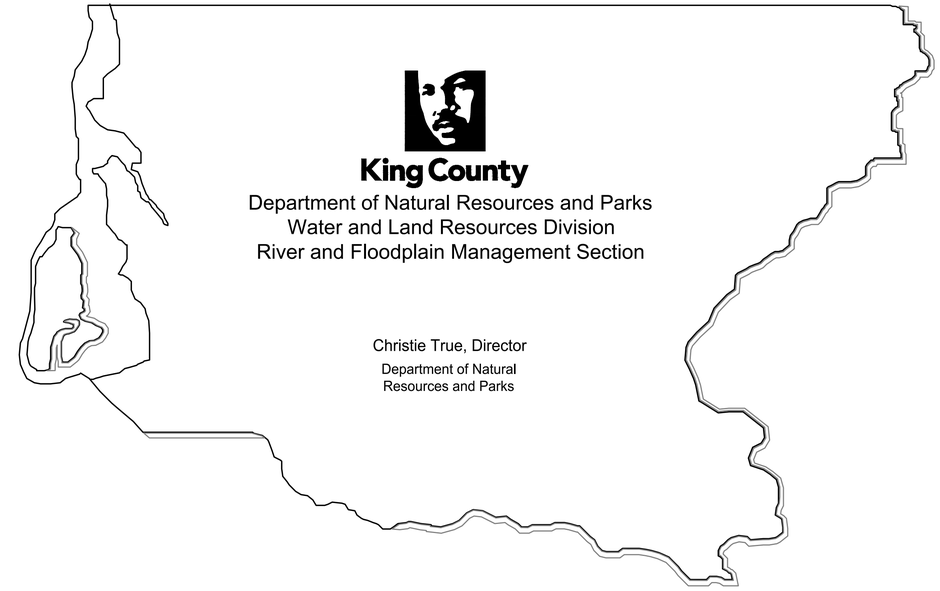

King County
Department of Natural Resources and Parks
Water and Land Resources Division
River and Floodplain Management Section

Christie True, Director
Department of Natural Resources and Parks

HERZMAN TO CAMP FREEMAN PROJECT

River Mile 6.3

Lat. 47°27'52"N, Long. 112°07'25"W

SHEET INDEX

SHEET	DESCRIPTION
1	COVER, VICINITY MAP AND INDEX
2	ABBREVIATIONS AND LEGEND
3	GENERAL AND SEQUENCING NOTES
4	EXISTING CONDITIONS SITE PLAN
5	SURVEY CONTROL
6	SITE PLAN – WEST
7	SITE PLAN – EAST
8	ACCESS, STAGING, AND TESC PLAN
9	TESC DETAILS
10	WATER MANAGEMENT PLAN
11	WATER MANAGEMENT DETAILS
12	FLOODPLAIN GRADING
13	HERZMAN LEVEE REMOVAL PLAN
14	HERZMAN LEVEE REMOVAL SECTIONS
15	RIVERBEND REVETMENT REMOVAL PLAN AND SECTIONS
16	HERZMAN LEVEE REPAIR PLAN AND DETAILS
17	HERZMAN SETBACK LEVEE AND BURIED ROCK REVETMENT PLAN
18	HERZMAN SETBACK LEVEE AND BURIED ROCK REVETMENT SECTIONS
19	BUCK'S CURVE REVETMENT REPAIR AND CAMP FREEMAN REVETMENT PLAN
20	BUCK'S CURVE REVETMENT REPAIR AND CAMP FREEMAN REVETMENT SECTIONS
21	TO BE INCLUDED IN FUTURE SUBMITTALS
22	TO BE INCLUDED IN FUTURE SUBMITTALS
23	TO BE INCLUDED IN FUTURE SUBMITTALS
24	DEFLECTOR ELS LAYERING PLAN
25	TO BE INCLUDED IN FUTURE SUBMITTALS
26	TO BE INCLUDED IN FUTURE SUBMITTALS
27	PLANTING PLAN – WEST
28	PLANTING PLAN – EAST
29	PLANTING SCHEDULE AND NOTES
30	PLANTING DETAILS

811
Know what's below.
Call before you dig.
(UNDERGROUND UTILITY LOCATIONS ARE APPROX.)

FIELD BOOK:
SURVEYED:
SURVEY BASE MAP:
CHECKED:

NUM.	REVISION	BY	DATE

30% SUBMITTAL 2/2022

NUM.	RECORD CHANGES PLOTTED	BY	DATE

APPROVED: M. EWBANK
PROJECT MANAGER: E. MCCLURE
DESIGNED: C. WEST
CAD DESIGN: P. ONSTOTT

PROJECT No.
CONTRACT No.

HERRERA

King County
Department of Natural Resources and Parks
Water and Land Resources Division
River and Floodplain Management Section
Christie True, Director

HERZMAN TO CAMP FREEMAN PROJECT

COVER, VICINITY MAP AND INDEX

SHEET **1** OF **30** SHEETS

XXXX-XX

Filename: KCDNRPxTB.dwt | Layout: Model | Last Edited: 2018/FEB/7
Location: I:\0-ACAD MASTER\TitleBlock

LEGEND

- PARCEL LINE (APPROX)
- EASEMENT
- LIMITS OF DISTURBANCE
- SURVEY EXTENTS
- SHORELINE AND RIVER BUFFER
- 100Y — 100-YEAR FLOODPLAIN BOUNDARY
- OHW — ORDINARY HIGH WATER MARK
- B — CRITICAL AREA BUFFER
- W — WETLAND BOUNDARY
- CL — CLEARING LIMITS
- COIR WATTLES
- SF — SILT FENCE
- HVSF — HIGH VISIBILITY SILT FENCE
- HIGH VISIBILITY FENCING
- TURBIDITY CURTAIN
- TEMPORARY BULK BAG DEFLECTOR
- SPLIT RAIL FENCE
- EXISTING CONTOURS (1 FT INTERVAL)
- PROPOSED CONTOURS (1 FT INTERVAL)
- EXISTING RIPRAP (SHOWN ON EXISTING CONDITIONS SHEETS ONLY)
- EXISTING RIPRAP TO BE REMOVED
- NEW RIPRAP
- SLASH PLACEMENT ZONE
- CONSTRUCTION STAGING AREA
- STABILIZED CONSTRUCTION ENTRANCE
- WETLAND
- EXISTING SUBGRADE
- TREE PROTECTION

- 6.30 — RIVER MILE 34.3
- RIVER FLOW DIRECTION
- EXISTING TREES (EVERGREEN/DECIDUOUS)
- BANK DEFLECTOR ELS
- WOOD HABITAT STRUCTURE
- CPT
- BORING
- BOULDERS
- BOLLARD

ABBREVIATIONS

APPROX	APPROXIMATE
AVG	AVERAGE
BD	BANK DEFLECTOR
BLDG	BUILDING
BMP	BEST MANAGEMENT PRACTICE
CFS	CUBIC FEET PER SECOND
CG	CLEAR AND GRUB
C/L, CL	CENTERLINE
CMP	CORRUGATED METAL PIPE
CONST	CONSTRUCT, CONSTRUCTION
CP	CONTROL POINT
DBH	DIAMETER AT BREAST HEIGHT
DIA	DIAMETER
DLS	DEPARTMENT OF LOCAL SERVICES
DWG	DRAWING
E	EAST, EASTING
EA	EACH
EG	EXISTING GROUND
EL	ELEVATION
ELS	ENGINEERED LOG STRUCTURE
ESC	EROSION AND SEDIMENT CONTROL
EX, EXIST	EXISTING
FG	FINISHED GROUND
FT	FEET/FOOT
H	HAND AUGER BORING
HOR	HORIZONTAL
HT	HEIGHT
IE	INVERT ELEVATION
IN	INCH/INCHES
KC	KING COUNTY
L	LENGTH
LiDAR	LIGHT DETECTION AND RANGING
LF	LINEAL FOOT/FEET
LOD	LIMITS OF DISTURBANCE
LT	LEFT
MAX	MAXIMUM
MIN	MINIMUM
N	NORTH/NORTHING
NA	NOT APPLICABLE
NIC	NOT IN CONTRACT
NO	NUMBER
NTS	NOT TO SCALE
OC	ON CENTER
OHW	OVERHEAD WIRE
OHWM	ORDINARY HIGH WATER
PREP	PREPARATION
QTY	QUANTITY
REF	REFERENCE
RM	RIVER MILE
S	SOUTH, SLOPE
SPEC	SPECIFICATION
STA	STATION
STD	STANDARD
SWDM	SURFACE WATER DESIGN MANUAL
SWPPP	STORMWATER POLLUTION PREVENTION PLAN
SWPPS	STORMWATER POLLUTION PREVENTION AND SPILL CONTROL
TCE	TEMPORARY CONSTRUCTION EASEMENT
TESC	TEMPORARY EROSION AND SEDIMENT CONTROL
TYP	TYPICAL
W	WEST, WATER
WSE	WATER SURFACE ELEVATION
WQMPP	WATER QUALITY MONITORING AND PROTECTION PLAN

1 / 5 — DETAIL REFERENCE NUMBER
DRAWING ON WHICH DETAIL IS SHOWN

A / 5 — SECTION REFERENCE LETTER
DRAWING ON WHICH SECTION IS SHOWN

SECTION/DETAIL 1 / 5 — SECTION/DETAIL REFERENCE NUMBER/LETTER
DRAWING FROM WHICH SECTION/DETAIL WAS TAKEN
SCALE: 1"=XX'

"–" INDICATES THAT THE DETAIL/SECTION IS SHOWN ON THE SAME DRAWING
"TYP" INDICATES THAT THE DETAIL/SECTION IS UNIFORMLY TYPICAL THROUGHOUT PROJECT EXCEPT WHERE OTHERWISE NOTED

"VAR" SPECIFIES THAT DETAIL/SECTION WAS TAKEN FROM VARIOUS DRAWINGS

NOTE AND DETAIL/SECTION REFERENCING

811 Know what's below. Call before you dig.
(UNDERGROUND UTILITY LOCATIONS ARE APPROX.)

FIELD BOOK:
SURVEYED:
SURVEY BASE MAP:
CHECKED:

NUM.	REVISION	BY	DATE

30% SUBMITTAL 2/2022

NUM.	RECORD CHANGES PROVIDED	BY	DATE

APPROVED: M. EWBANK
PROJECT MANAGER: E. MCCLURE
DESIGNED: C. WEST
CAD DESIGN: P. ONSTOTT

PROJECT No.
CONTRACT No.

HERRERA

King County
Department of Natural Resources and Parks
Water and Land Resources Division
River and Floodplain Management Section
Christie True, Director

HERZMAN TO CAMP FREEMAN PROJECT

ABBREVIATIONS AND LEGEND

SHEET **2** OF **30** SHEETS

XXXX-XX

Filename: KCDNRPxTB.dwt | Layout: Model | Last Edited: 2018/FEB/7
Location: I:\0-ACAD MASTER\TitleBlock

GENERAL CONSTRUCTION NOTES

1. THE WORK INCLUDES CLEARING WORK AREAS OF VEGETATION, STOCKPILING CLEARED VEGETATION, OFFSITE DISPOSAL OF INVASIVE VEGETATION, REMOVING AN EXISTING LEVEE AND ROCK ARMORING, CONSTRUCTING A SETBACK LEVEE, CONSTRUCTING SETBACK ROCK REVETMENTS, REPAIRING AN EXISITING ROCK REVETMENT, FLOODPLAIN GRADING, CONSTRUCTING ENGINEERED LOG STRUCTURES, INSTALLING TIMBER PILES AND IMPORTED AND SALVAGED LOGS IN THE FLOODPLAIN, PLANTING, CONSTRUCTING AND REMOVING TEMPORARY FACILITIES, WORKING AROUND EXISTING ABOVE GROUND UTILITIES, AND RESTORING THE DISTURBED AREAS.

2. THE WORK SHOWN ON THE PLANS SHALL BE SEQUENCED AND PERFORMED IN A MANNER THAT MINIMIZES IMPACTS TO THE RIVER, WETLANDS, EXISTING VEGETATION, THE WORK SITE AND ADJACENT PRIVATE PROPERTY AND PUBLIC INFRASTRUCTURE.

3. THE CONTRACTOR MAY DECIDE HOW TO SEQUENCE THE WORK. HOWEVER THIS PROJECT WILL BE CONSTRAINED BY THE MIGRATORY BIRD TREATY ACT AND BY AN IN-WATER WORK WINDOW. THESE RESTRICTIONS ARE PROVIDED IN THE CONTRACT SPECIFICATIONS AND PERMITS INCLUDED IN THE CONTRACT DOCUMENTS INCLUDING THE PROJECT HYDRAULIC PROJECT APPROVAL, SECTION 404 PERMIT, AND ANY OTHER APPLICABLE PERMIT. WORK MAY NOT OCCUR WATERWARD OF THE OHWM OUTSIDE OF THE ALLOWABLE DATES IDENTIFIED IN THE PROJECT PERMITS.

4. PROJECT REPRESENTATIVE IS DEFINED AS THE OWNER'S REPRESENTATIVE OR OWNER'S PROJECT REPRESENTATIVE. KING COUNTY IS DEFINED AS THE OWNER. THE CONTRACTOR SHALL INSTALL NECESSARY BMPS AND PROVIDE 24-HOURS NOTICE TO KING COUNTY DEPARTMENT OF LOCAL SERVICE INSPECTOR PRIOR BEGINNING CLEARING OR GRADING.

5. THE CONTRACTOR SHALL STAKE THE LIMITS OF DISTURBANCE FOR APPROVAL BY THE OWNER OR PROJECT REPRESENTATIVE AT LEAST 5 WORKING DAYS PRIOR TO COMMENCING ONSITE ACTIVITIES. PROJECT CONSTRUCTION LIMITS SHOWN ON THE PLANS REPRESENT WORK AREAS AND DO NOT REPRESENT CLEARING LIMITS. CLEARING LIMITS ARE SHOWN.

6. TREES AND BRUSH NOT SHOWN ON THE PLANS WILL BE ENCOUNTERED DURING CONSTRUCTION ACTIVITIES. ALL TREES WITHIN THE LIMITS OF DISTURBANCE ARE APPROVED FOR REMOVAL UNLESS OTHERWISE INDICATED. PROTECT ALL TREES IDENTIFIED TO REMAIN. FOLLOWING CLEARING OF ALLOWED VEGETATION, THE CONTRACTOR SHALL STOCKPILE ALL TREES AND BRUSH PRIOR TO AND DURING CONSTRUCTION ACTIVITIES, FOR USE IN AREAS AS SHOWN ON THE PLANS, AND AS DIRECTED BY THE OWNER OR PROJECT REPRESENTATIVE TO CREATE ROUGH FINISHED GRADED SURFACES. CERTAIN VEGETATION MAY BE FLAGGED BY THE PROJECT REPRESENTATIVE OR OWNER FOR SALVAGE, AND CARE SHALL BE TAKEN TO PROTECT THOSE PLANTS FROM DAMAGE AND DESICCATION.

7. ALTERATION OR DISTURBANCE OF THE CHANNEL, FLOODPLAIN, AND ANY BANK AND FLOODPLAIN VEGETATION SHALL BE MINIMIZED TO THAT NECESSARY TO CONSTRUCT THE PROJECT. THE CONTRACTOR SHALL KEEP DISTURBED AREAS WITHIN THE LIMITS OF DISTURBANCE SHOWN ON THE PLANS, AND SHALL NOT EXTEND THESE LIMITS UNLESS APPROVED BY THE PROJECT REPRESENTATIVE.

8. THE CONTRACTOR SHALL PROVIDE 24 HOURS ADVANCE NOTICE TO THE OWNER OR PROJECT REPRESENTATIVE PRIOR TO ANY REQUIRED SPECIAL INSPECTION.

9. CONSTRUCTION MATERIAL AND EQUIPMENT STAGING AREAS SHALL BE LOCATED ENTIRELY WITHIN THE LIMITS OF DISTURBANCE. CONSTRUCTION MATERIALS AND EQUIPMENT SHALL NOT BE STORED OUTSIDE OF IDENTIFIED STAGING AREAS, UNLESS APPROVED BY THE OWNER OR PROJECT REPRESENTATIVE. THE CONTRACTOR SHALL PROTECT ALL CONSTRUCTION MATERIALS AND EQUIPMENT FROM DAMAGE AT ALL TIMES.

10. NO EQUIPMENT OR CONSTRUCTION MATERIALS SHALL BE STORED OVERNIGHT WATERWARD OF THE OHWM. EQUIPMENT FUELING AREAS SHALL BE LOCATED MORE THAN 150' FROM THE EXISTING OHWM OF THE RIVER AND WETLAND BOUNDARIES.

11. EQUIPMENT USED FOR THIS PROJECT SHALL BE FREE OF EXTERNAL PETROLEUM-BASED PRODUCTS. ACCUMULATION OF SOILS OR DEBRIS SHALL BE REMOVED FROM EQUIPMENT PRIOR TO ITS WORKING BELOW THE OHWM AND WITHIN THE WATER.

12. ALL EQUIPMENT OPERATING BELOW OHW AND WITHIN WETLANDS SHALL USE ONLY BIODEGRADABLE, VEGETABLE BASED HYDRAULIC FLUIDS OR APPROVED OTHER.

13. EQUIPMENT SHALL BE CHECKED AT THE BEGINNING OF EACH WORK SHIFT FOR LEAKS, AND ANY NECESSARY REPAIRS SHALL BE COMPLETED PRIOR TO COMMENCING WORK ACTIVITIES.

14. THE CONTRACTOR IS RESPONSIBLE TO ENSURE THAT NO PETROLEUM PRODUCTS, HYDRAULIC FLUID, CHEMICALS, OR ANY OTHER TOXIC OR DELETERIOUS MATERIALS ARE ALLOWED TO ENTER OR LEACH INTO THE RIVER, WETLANDS, GROUNDWATER, OR THE PROJECT SITE FROM EQUIPMENT OR SUPPLIES USED DURING CONSTRUCTION.

15. CONTRACTOR SHALL LIMIT MACHINERY MOVEMENT TO THE LIMITS OF DISTURBANCE DEFINED ON THE PLANS OR IDENTIFIED AS ACCEPTABLE BY THE OWNER OR PROJECT REPRESENTATIVE.

16. IF AT ANY TIME, AS A RESULT OF PROJECT ACTIVITIES, FISH ARE OBSERVED IN DISTRESS, A FISH KILL OCCURS, WATER QUALITY STANDARDS ARE EXCEEDED, OR WATER QUALITY PROBLEMS DEVELOP (INCLUDING EQUIPMENT LEAKS OR SPILLS), OPERATIONS SHALL CEASE AND THE OWNER SHALL BE NOTIFIED IMMEDIATELY. WASHINGTON DEPARTMENT OF FISH AND WILDLIFE AND WASHINGTON STATE DEPARTMENT OF ECOLOGY SHALL BE CONTACTED IMMEDIATELY BY THE OWNER OR BY HIS/HER DESIGNEE. WORK SHALL NOT RESUME UNTIL FURTHER APPROVAL BY THE OWNER.

17. EROSION AND SEDIMENT CONTROL METHODS SHALL BE USED TO MINIMIZE SILT-LADEN WATER FROM ENTERING THE RIVER AND WETLANDS. MINIMUM EROSION AND WATER POLLUTION CONTROL AND WATER MANAGEMENT BMPS ARE SHOWN ON THE TESC AND WATER MANAGEMENT SITE PLAN. THE CONTRACTOR SHALL IMPLEMENT THE PLAN, ADD ANY ADDITIONAL MEASURES REQUIRED TO MEET WASHINGTON STATE WATER QUALITY STANDARDS AND PROJECT PERMIT CONDITIONS, AND SHALL BE RESPONSIBLE FOR ALL EROSION AND SEDIMENT CONTROL AND WATER MANAGEMENT NEEDED DURING CONSTRUCTION ACTIVITIES.

18. IF HIGH FLOW CONDITIONS THAT MAY CAUSE SILTATION, EROSION OR A DANGEROUS WORK ENVIRONMENT ARE ENCOUNTERED DURING CONSTRUCTION, WORK SHALL STOP IN THOSE AFFECTED AREAS UNTIL THE FLOW SUBSIDES.

19. CULTURAL RESOURCES MONITORING WILL BE COMPLETED BY THE OWNER DURING CONSTRUCTION. IF AT ANY TIME, AS A RESULT OF PROJECT ACTIVITIES, ARTIFACTS OR HUMAN REMAINS ARE FOUND, OPERATIONS SHALL CEASE AND THE OWNER SHALL BE NOTIFIED IMMEDIATELY. ALL CONSTRUCTION STAFF SHALL BE TRAINED IN CULTURAL RESOURCES MONITORING BASICS.

RECOMMENDED CONSTRUCTION SEQUENCING

1. HOLD THE PRE-CONSTRUCTION MEETING.
2. POST SIGN WITH NAME AND PHONE NUMBER OF CSWPP/ESC SUPERVISOR (MAY BE CONSOLIDATED WITH THE REQUIRED NOTICE OF CONSTRUCTION SIGN).
3. FLAG OR FENCE CLEARING LIMITS.
4. GRADE AND INSTALL CONSTRUCTION ENTRANCE(S).
5. INSTALL PERIMETER PROTECTION (SILT FENCE, STRAW WATTLES, ETC.).
6. GRADE AND STABILIZE CONSTRUCTION ROADS AND CROSSINGS.
7. CONSTRUCT SURFACE WATER CONTROLS (INTERCEPTOR DIKES, TEMPORARY CULVERTS, ETC.) SIMULTANEOUSLY WITH CLEARING AND GRADING FOR PROJECT DEVELOPMENT.
8. MAINTAIN EROSION CONTROL AND SWPPS MEASURES IN ACCORDANCE WITH KING COUNTY STANDARDS AND MANUFACTURER'S RECOMMENDATIONS.
9. RELOCATE EROSION CONTROL AND SWPPS MEASURES, OR INSTALL NEW MEASURES SO THAT AS SITE CONDITIONS CHANGE, THE EROSION AND SEDIMENT CONTROL AND POLLUTANT PROTECTION IS ALWAYS IN ACCORDANCE WITH THE KING COUNTY CONSTRUCTION STORMWATER POLLUTION PREVENTION STANDARDS.
10. COVER ALL AREAS THAT WILL BE UNWORKED FOR MORE THAN SEVEN DAYS DURING THE DRY SEASON OR TWO DAYS DURING THE WET SEASON WITH STRAW, WOOD FIBER MULCH, COMPOST, PLASTIC SHEETING, OR EQUIVALENT.
11. STABILIZE ALL AREAS WITHIN SEVEN DAYS OF REACHING FINAL GRADE.
12. SEED, SOD, STABILIZE, OR COVER ANY AREAS TO REMAIN UNWORKED FOR MORE THAN 30 DAYS.
13. UPON COMPLETION OF THE PROJECT, OR BEGINNING OF WET SEASON (OCTOBER 1 TO APRIL 30) STABILIZE ALL DISTURBED AREAS AND REMOVE BMPS IF APPROPRIATE.

ESC NOTES

1. APPROVAL OF THIS EROSION AND SEDIMENTATION CONTROL (ESC) PLAN DOES NOT CONSTITUTE AN APPROVAL OF PERMANENT ROAD OR DRAINAGE DESIGN (E.G. SIZE AND LOCATION OF ROADS, PIPES, RESTRICTORS, CHANNELS, RETENTION FACILITIES, UTILITIES, ETC.).
2. THE IMPLEMENTATION OF THESE ESC PLANS AND THE CONSTRUCTION, MAINTENANCE, REPLACEMENT, AND UPGRADING OF THESE ESC FACILITIES IS THE RESPONSIBILITY OF THE CONTRACTOR UNTIL ALL CONSTRUCTION IS APPROVED.
3. THE BOUNDARIES OF THE CLEARING LIMITS SHOWN ON THIS PLAN SHALL BE CLEARLY FLAGGED BY SURVEY TAPE OR FENCING, IF REQUIRED, PRIOR TO CONSTRUCTION (SWDM APPENDIX D). DURING THE CONSTRUCTION PERIOD, NO DISTURBANCE BEYOND THE CLEARING LIMITS SHALL BE PERMITTED. THE CLEARING LIMITS SHALL BE MAINTAINED BY THE CONTRACTOR FOR THE DURATION OF CONSTRUCTION.
4. STABILIZED CONSTRUCTION ENTRANCES SHALL BE INSTALLED AT THE BEGINNING OF CONSTRUCTION AND MAINTAINED FOR THE DURATION OF THE PROJECT. ADDITIONAL MEASURES, SUCH AS CONSTRUCTED WHEEL WASH SYSTEMS OR WASH PADS, MAY BE REQUIRED TO ENSURE THAT ALL PAVED AREAS ARE KEPT CLEAN AND TRACK OUT TO ROAD RIGHT OF WAY DOES NOT OCCUR FOR THE DURATION OF THE PROJECT.
5. THE ESC FACILITIES SHOWN ON THIS PLAN MUST BE CONSTRUCTED PRIOR TO OR IN CONJUNCTION WITH ALL CLEARING AND GRADING SO AS TO ENSURE THAT THE TRANSPORT OF SEDIMENT TO SURFACE WATERS, DRAINAGE SYSTEMS, AND ADJACENT PROPERTIES IS MINIMIZED.
6. THE ESC FACILITIES SHOWN ON THIS PLAN ARE THE MINIMUM REQUIREMENTS FOR ANTICIPATED SITE CONDITIONS. DURING THE CONSTRUCTION PERIOD, THESE ESC FACILITIES SHALL BE UPGRADED AS NEEDED FOR UNEXPECTED STORM EVENTS AND MODIFIED TO ACCOUNT FOR CHANGING SITE CONDITIONS (E.G. ADDITIONAL COVER MEASURES, ADDITIONAL SUMP PUMPS, RELOCATION OF DITCHES AND SILT FENCES, PERIMETER PROTECTION ETC.).
7. THE ESC FACILITIES SHALL BE INSPECTED DAILY BY THE CONTRACTOR AND MAINTAINED TO ENSURE CONTINUED PROPER FUNCTIONING. WRITTEN RECORDS SHALL BE KEPT OF WEEKLY REVIEWS OF THE ESC FACILITIES.
8. ANY AREAS OF EXPOSED SOILS, INCLUDING ROADWAY EMBANKMENTS, THAT WILL NOT BE DISTURBED FOR TWO DAYS DURING THE WET SEASON OR SEVEN DAYS DURING THE DRY SEASON SHALL BE IMMEDIATELY STABILIZED WITH THE APPROVED ESC COVER METHODS (E.G., SEEDING, MULCHING, PLASTIC COVERING, ETC.).
9. ANY AREA NEEDING ESC MEASURES, NOT REQUIRING IMMEDIATE ATTENTION, SHALL BE ADDRESSED WITHIN SEVEN (7) DAYS.
10. THE ESC FACILITIES ON INACTIVE SITES SHALL BE INSPECTED AND MAINTAINED A MINIMUM OF ONCE A MONTH OR WITHIN 24 HOURS FOLLOWING A STORM EVENT.
13. COVER MEASURES WILL BE APPLIED IN CONFORMANCE WITH APPENDIX D OF THE SURFACE WATER DESIGN MANUAL.
14. PRIOR TO THE BEGINNING OF THE WET SEASON (OCT. 1), ALL DISTURBED AREAS SHALL BE REVIEWED TO IDENTIFY WHICH ONES CAN BE SEEDED IN PREPARATION FOR THE WINTER RAINS. DISTURBED AREAS SHALL BE SEEDED WITHIN TWO WEEKS OF THE BEGINNING OF THE WET SEASON. A SKETCH MAP OF THOSE AREAS TO BE SEEDED AND THOSE AREAS TO REMAIN UNCOVERED SHALL BE SUBMITTED TO THE KING COUNTY DLS INSPECTOR FOR REVIEW.

SWPPS NOTES

1. ALL POLLUTANTS, INCLUDING WASTE MATERIALS, THAT OCCUR ONSITE SHALL BE HANDLED AND DISPOSED OF IN A MANNER THAT DOES NOT CAUSE CONTAMINATION OF STORMWATER.
2. COVER, CONTAINMENT, AND PROTECTION FROM VANDALISM SHALL BE PROVIDED FOR ALL CHEMICALS, LIQUID PRODUCTS, PETROLEUM PRODUCTS, AND NON-INERT WASTES PRESENT ON THE SITE (SEE CHAPTER 173-304 WAC FOR THE DEFINITION OF INERT WASTE). ONSITE FUELING TANKS SHALL INCLUDE SECONDARY CONTAINMENT.
3. MAINTENANCE AND REPAIR OF HEAVY EQUIPMENT AND VEHICLES INVOLVING OIL CHANGES, HYDRAULIC SYSTEM DRAIN DOWN, SOLVENT AND DE-GREASING CLEANING OPERATIONS, FUEL TANK DRAIN DOWN AND REMOVAL, AND OTHER ACTIVITIES WHICH MAY RESULT IN DISCHARGE OR SPILLAGE OF POLLUTANTS TO THE GROUND OR INTO STORMWATER RUNOFF MUST BE CONDUCTED USING SPILL PREVENTION MEASURES, SUCH AS DRIP PANS. CONTAMINATED SURFACES SHALL BE CLEANED IMMEDIATELY FOLLOWING ANY DISCHARGE OR SPILL INCIDENT. EMERGENCY REPAIRS MAY BE PERFORMED ONSITE USING TEMPORARY PLASTIC PLACED BENEATH AND, IF RAINING, OVER THE VEHICLE.
4. APPLICATION OF AGRICULTURAL CHEMICALS, INCLUDING FERTILIZERS AND PESTICIDES, SHALL BE CONDUCTED IN A MANNER AND AT APPLICATION RATES THAT WILL NOT RESULT IN LOSS OF CHEMICAL TO STORMWATER RUNOFF. MANUFACTURERS' RECOMMENDATIONS FOR APPLICATION RATES AND PROCEDURES SHALL BE FOLLOWED.

811 Know what's below. Call before you dig.
(UNDERGROUND UTILITY LOCATIONS ARE APPROX.)

FIELD BOOK:
SURVEYED:
SURVEY BASE MAP:
CHECKED:

NUM.	REVISION	BY	DATE

30% SUBMITTAL 2/2022

NUM.	RECORD CHANGES	BY	DATE

APPROVED: M. EWBANK
PROJECT MANAGER: E. MCCLURE
DESIGNED: C. WEST
CAD DESIGN: P. ONSTOTT

PROJECT No.
CONTRACT No.

HERRERA

King County
Department of Natural Resources and Parks
Water and Land Resources Division
River and Floodplain Management Section
Christie True, Director

HERZMAN TO CAMP FREEMAN PROJECT

GENERAL AND SEQUENCING NOTES

SHEET **3** OF **30** SHEETS

XXXX-XX

Filename: KCDNRPxTB.dwt | Layout: Model | Last Edited: 2018/FEB/7
Location: I:\0-ACAD MASTER\TitleBlock

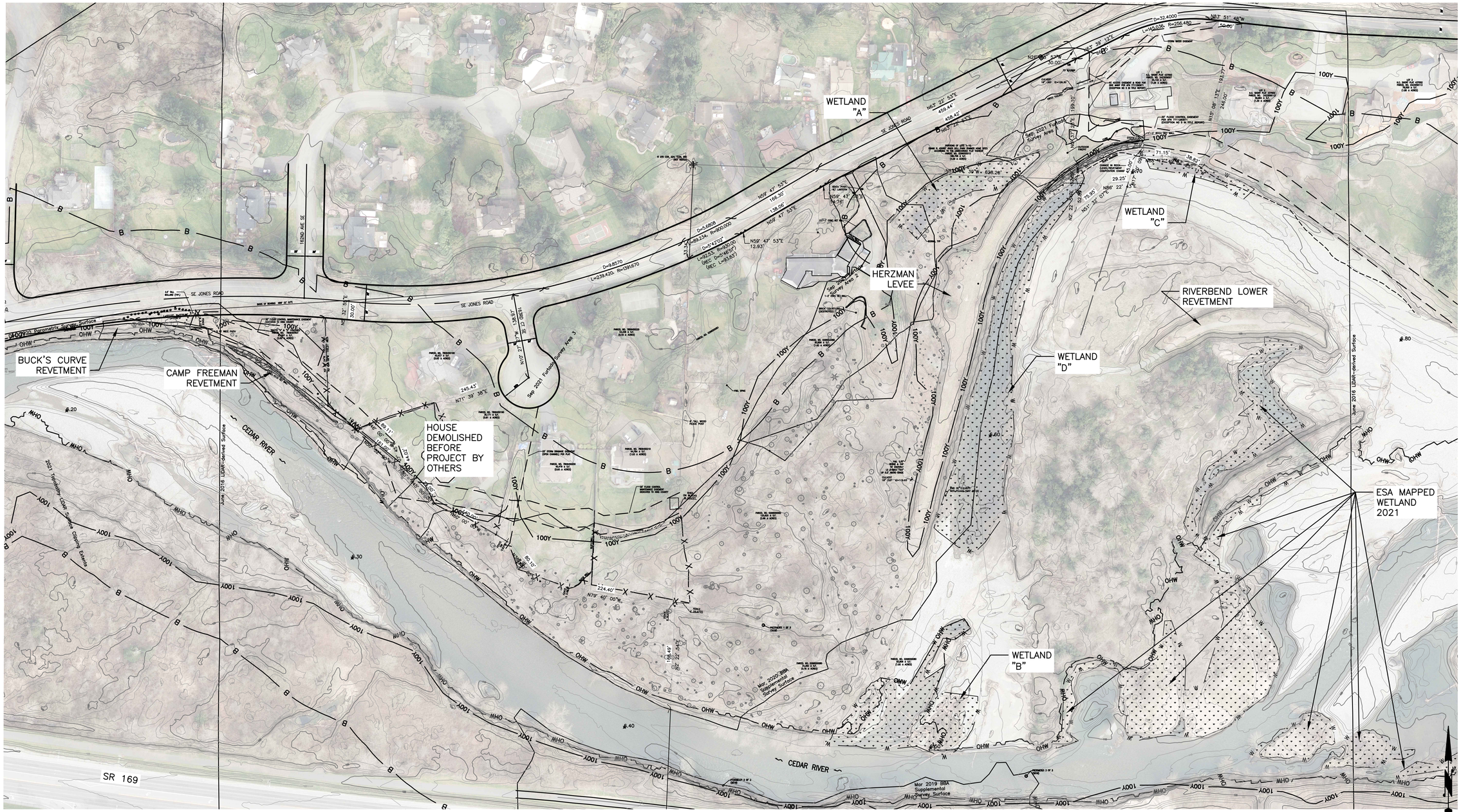

NOTES

HORIZONTAL DATUM:

PROJECT GROUND COORDINATES BASED UPON WASHINGTON STATE PLANE COORDINATE SYSTEM NAD 83/1991 NORTH ZONE, US SURVEY FOOT.
OBSERVED BY RTK GPS OBSERVATIONS FROM THE WASHINGTON STATE REFERENCE NETWORK (WSRN), BASED ON FURTADO AND ASSOCIATES CONTROL POINT NO'S 302 AND 318

VERTICAL DATUM:

THE VERTICAL DATUM IS NAVD88 US SURVEY FOOT, BASED ON CONSTRAINING GPS OBSERVATIONS FROM STATION "HAFF" WHICH IS A NGS BRASS DISK SET IN THE TOP OF A CONCRETE MONUMENT LOCATED IN A KING COUNTY MAINTENANCE FACILITY IN RENTON WASHINGTON. "HAFF" ELEVATION = 340.95 US SURVEY FOOT.

80 0 80
SCALE IN FEET

811 Know what's below. Call before you dig.
(UNDERGROUND UTILITY LOCATIONS ARE APPROX.)

FIELD BOOK:
SURVEYED:
SURVEY BASE MAP:
CHECKED:

NUM.	REVISION	BY	DATE

30% SUBMITTAL 2/2022

NUM.	RECORD CHANGES PLOTTED	BY	DATE

APPROVED: M. EWBANK
PROJECT MANAGER: E. MCCLURE
DESIGNED: C. WEST
CAD DESIGN: P. ONSTOTT

PROJECT No.
CONTRACT No.

HERRERA

King County
Department of Natural Resources and Parks
Water and Land Resources Division
River and Floodplain Management Section
Christie True, Director

HERZMAN TO CAMP FREEMAN PROJECT

EXISTING CONDITIONS SITE PLAN

SHEET **4** OF **30** SHEETS

XXXX-XX

Filename: KCDNRPxTB.dwt | Layout: Model | Last Edited: 2018/FEB/7
Location: I:\0-ACAD MASTER\TitleBlock

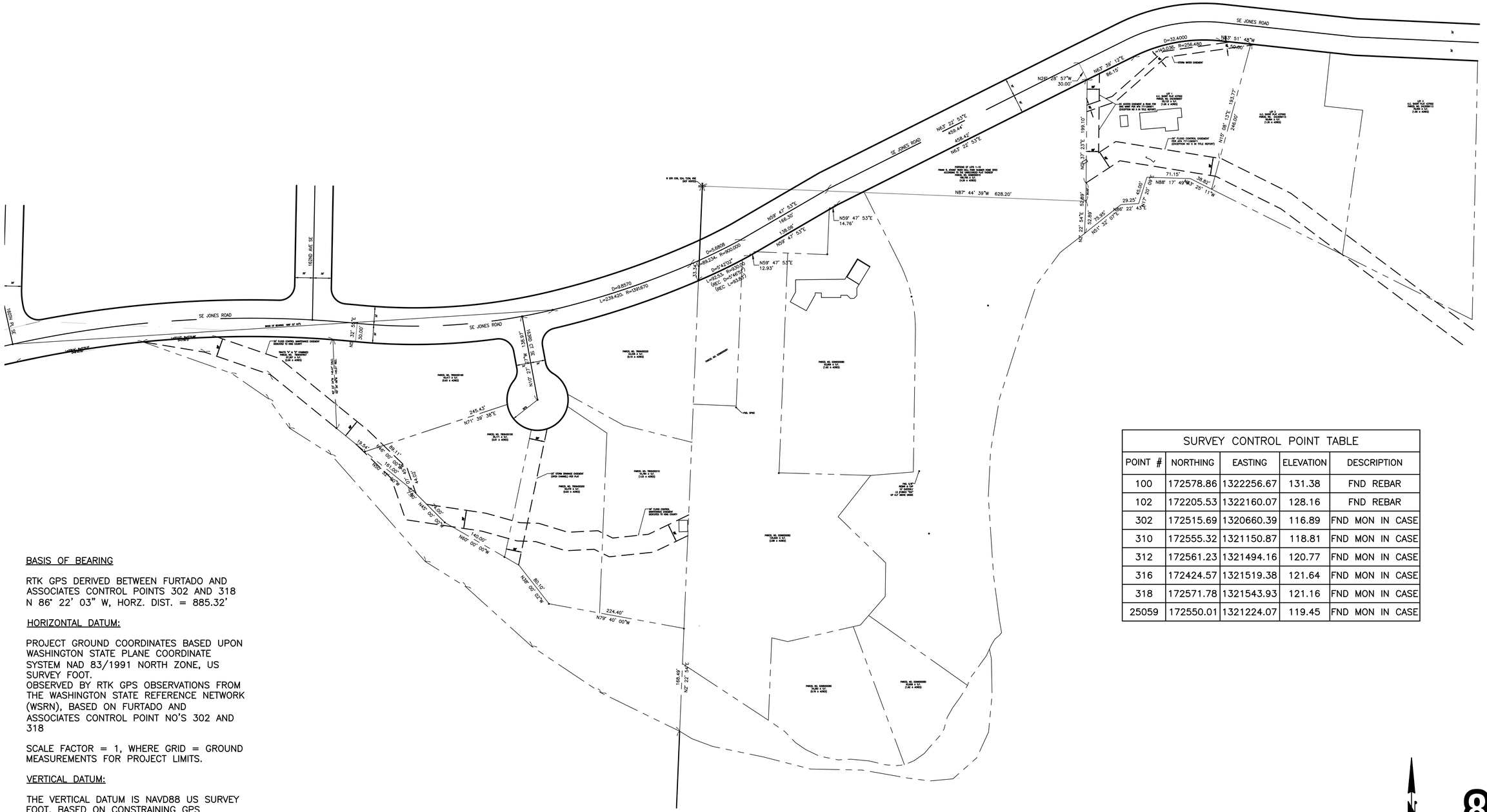

SURVEY CONTROL POINT TABLE				
POINT #	NORTHING	EASTING	ELEVATION	DESCRIPTION
100	172578.86	1322256.67	131.38	FND REBAR
102	172205.53	1322160.07	128.16	FND REBAR
302	172515.69	1320660.39	116.89	FND MON IN CASE
310	172555.32	1321150.87	118.81	FND MON IN CASE
312	172561.23	1321494.16	120.77	FND MON IN CASE
316	172424.57	1321519.38	121.64	FND MON IN CASE
318	172571.78	1321543.93	121.16	FND MON IN CASE
25059	172550.01	1321224.07	119.45	FND MON IN CASE

BASIS OF BEARING

RTK GPS DERIVED BETWEEN FURTADO AND ASSOCIATES CONTROL POINTS 302 AND 318 N 86° 22' 03" W, HORZ. DIST. = 885.32'

HORIZONTAL DATUM:

PROJECT GROUND COORDINATES BASED UPON WASHINGTON STATE PLANE COORDINATE SYSTEM NAD 83/1991 NORTH ZONE, US SURVEY FOOT.
OBSERVED BY RTK GPS OBSERVATIONS FROM THE WASHINGTON STATE REFERENCE NETWORK (WSRN), BASED ON FURTADO AND ASSOCIATES CONTROL POINT NO'S 302 AND 318

SCALE FACTOR = 1, WHERE GRID = GROUND MEASUREMENTS FOR PROJECT LIMITS.

VERTICAL DATUM:

THE VERTICAL DATUM IS NAVD88 US SURVEY FOOT, BASED ON CONSTRAINING GPS OBSERVATIONS FROM STATION "HAFF" WHICH IS A NGS BRASS DISK SET IN THE TOP OF A CONCRETE MONUMENT LOCATED IN A KING COUNTY MAINTENANCE FACILITY IN RENTON WASHINGTON. "HAFF" ELEVATION = 340.95 US SURVEY FOOT.

80 0 80
SCALE IN FEET

Know what's below.
Call before you dig.
(UNDERGROUND UTILITY LOCATIONS ARE APPROX.)

FIELD BOOK:
SURVEYED:
SURVEY BASE MAP:
CHECKED:

NUM.	REVISION	BY	DATE

30% SUBMITTAL 2/2022

NUM.	RECORD CHANGES PROVIDED	BY	DATE

APPROVED: M. EWBANK
PROJECT MANAGER: E. MCCLURE
DESIGNED: C. WEST
CAD DESIGN: P. ONSTOTT

PROJECT No.
CONTRACT No.

HERRERA

King County
Department of Natural Resources and Parks
Water and Land Resources Division
River and Floodplain Management Section
Christie True, Director

HERZMAN TO CAMP FREEMAN PROJECT

SURVEY CONTROL

SHEET **5** OF **30** SHEETS

XXXX-XX

Filename: KCDNRPxTB.dwt | Layout: Model | Last Edited: 2018/FEB/7
Location: I:\0-ACAD MASTER\TitleBlock

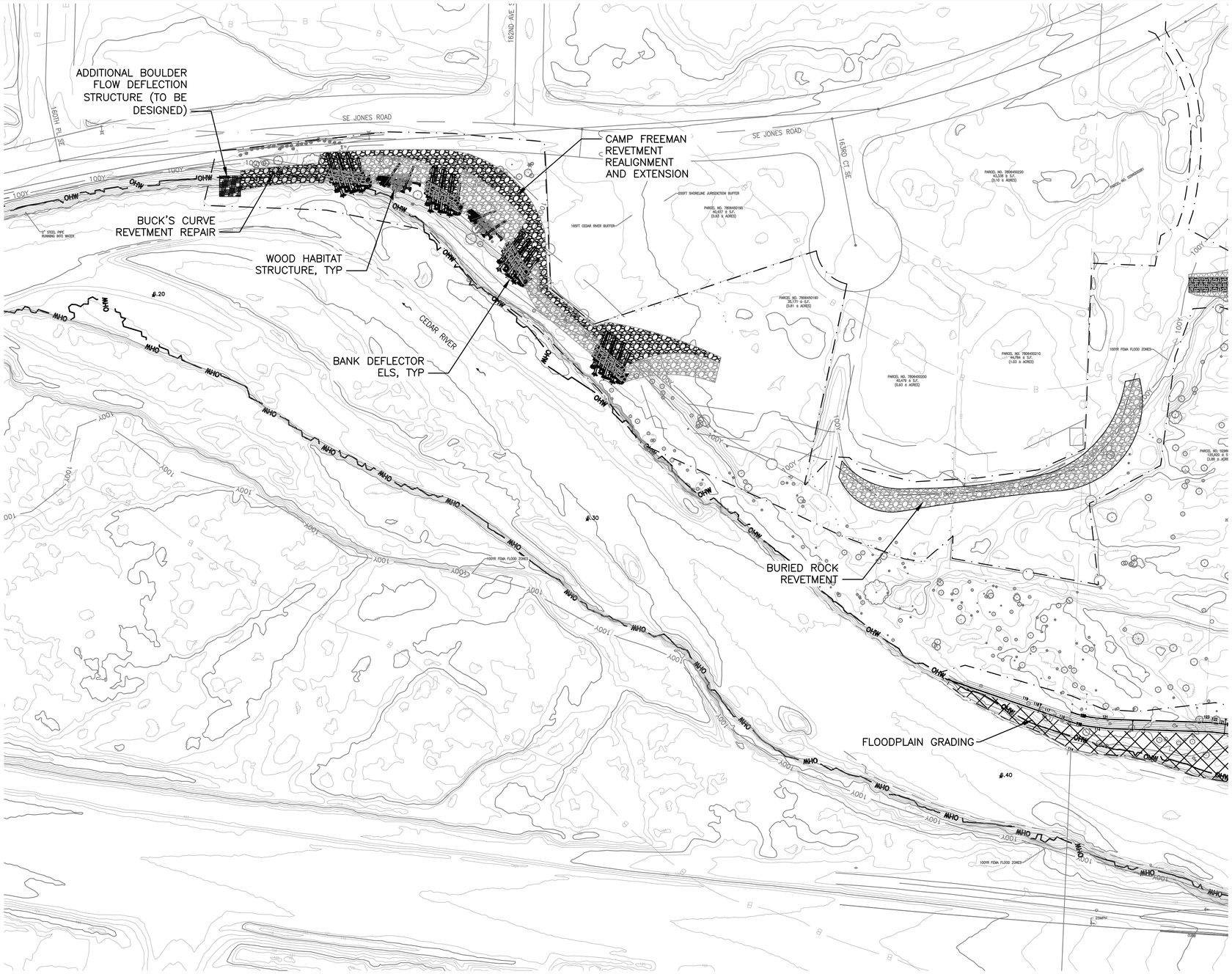

NOTES:

1. ALL TREES WITHIN THE LIMITS OF DISTURBANCE ARE APPROVED FOR REMOVAL UNLESS OTHERWISE INDICATED. PROTECT ALL TRESS IDENTIFIED TO REMAIN.
2. TREES SMALLER THAN 12" DBH AND OTHER WOODY, NON-INVASIVE VEGETATION THAT IS REMOVED AS A RESULT OF CLEARING ACTIVITIES SHALL BE SALVAGED AND USED AS SLASH.
3. SALVAGE ROCK FROM EXISTING CAMP FREEMAN REVETMENT FOR REUSE. SEE SECTION xx OF THE SPECIFICATIONS.

811
Know what's below.
Call before you dig.
(UNDERGROUND UTILITY LOCATIONS ARE APPROX.)

FIELD BOOK:
SURVEYED:
SURVEY BASE MAP:
CHECKED:

NUM.	REVISION	BY	DATE

30% SUBMITTAL 2/2022

NUM.	RECORD CHANGES PROVIDED	BY	DATE

APPROVED: M. EWBANK
PROJECT MANAGER: E. MCCLURE
DESIGNED: C. WEST
CAD DESIGN: P. ONSTOTT

PROJECT No.
CONTRACT No.

HERRERA

King County
Department of Natural Resources and Parks
Water and Land Resources Division
River and Floodplain Management Section
Christie True, Director

HERZMAN TO CAMP FREEMAN PROJECT

SITE PLAN - WEST

SHEET **6** OF **30** SHEETS

XXXX-XX

Filename: KCDNRPxTB.dwt | Layout: Model | Last Edited: 2018/FEB/7
Location: I:\0-ACAD MASTER\TitleBlock

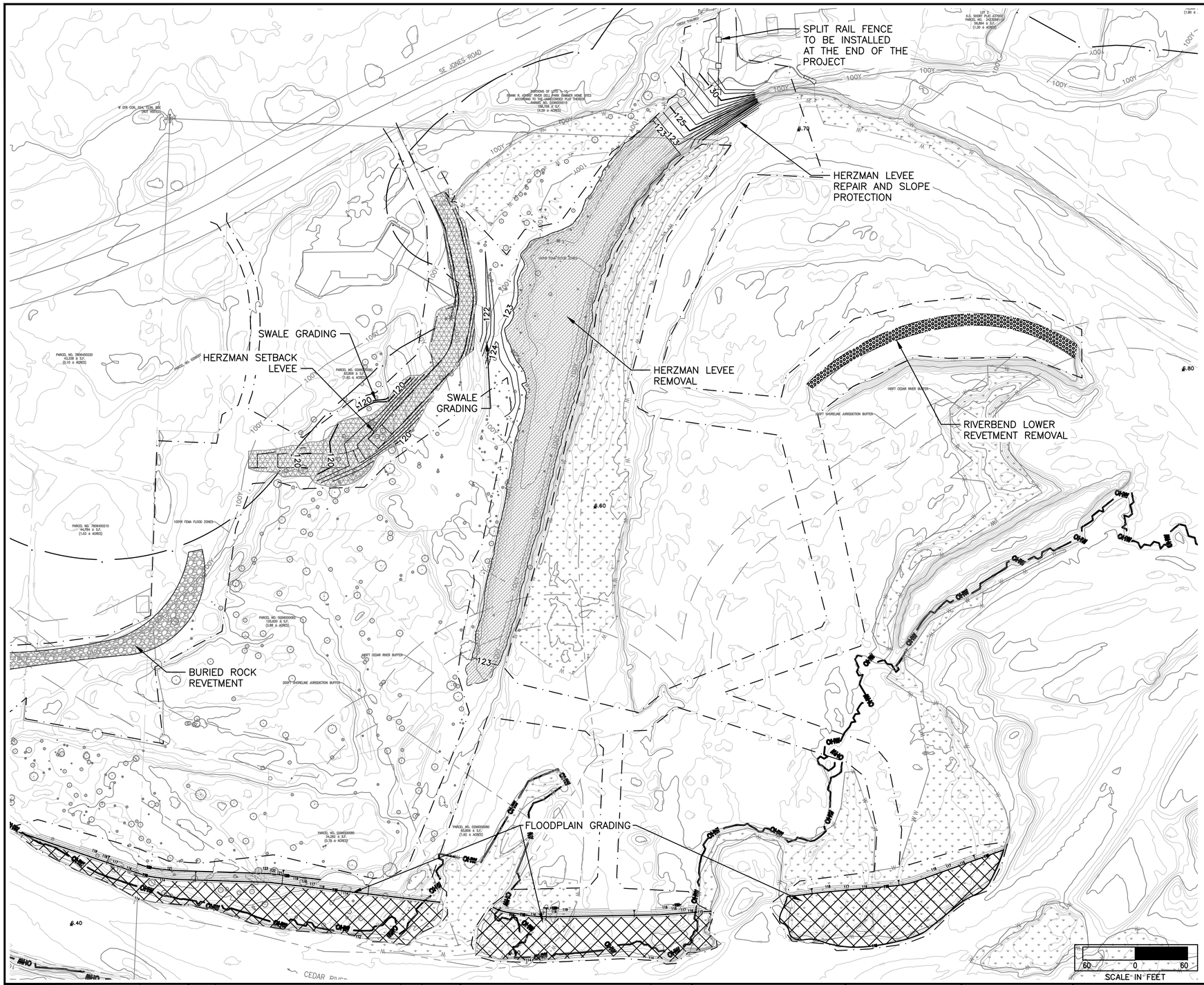

NOTES:

1. ALL TREES WITHIN THE LIMITS OF DISTURBANCE ARE APPROVED FOR REMOVAL UNLESS OTHERWISE INDICATED. PROTECT ALL TRESS IDENTIFIED TO REMAIN.
2. TREES SMALLER THAN 12" DBH AND OTHER WOODY, NON-INVASIVE VEGETATION THAT IS REMOVED AS A RESULT OF CLEARING ACTIVITIES SHALL BE SALVAGED AND USED AS SLASH.
3. SALVAGE ROCK FROM LEVEE AND REVETMENT FOR REUSE. SEE SECTION xx OF THE SPECIFICATIONS.

811
Know what's below.
Call before you dig.
(UNDERGROUND UTILITY LOCATIONS ARE APPROX.)

FIELD BOOK:
SURVEYED:
SURVEY BASE MAP:
CHECKED:

NUM.	REVISION	BY	DATE

30% SUBMITTAL 2/2022

NUM.	RECORD CHANGES MADE	BY	DATE

APPROVED: M. EWBANK
PROJECT MANAGER: E. MCCLURE
DESIGNED: C. WEST
CAD DESIGN: P. ONSTOTT

PROJECT No.
CONTRACT No.

HERRERA

King County
Department of Natural Resources and Parks
Water and Land Resources Division
River and Floodplain Management Section
Christie True, Director

HERZMAN TO CAMP FREEMAN PROJECT

SITE PLAN - EAST

SHEET **7** OF **30** SHEETS

XXXX-XX

Filename: KCDNRPxTB.dwt | Layout: Model | Last Edited: 2018/FEB/7
Location: I:\0-ACAD MASTER\TitleBlock

ENTRANCE ONLY, NO EQUIPMENT EGRESS

SE JONES ROAD

CEDAR RIVER

SCALE IN FEET

80 0 80

Know what's below.
Call before you dig.

(UNDERGROUND UTILITY LOCATIONS ARE APPROX.)

FIELD BOOK:
SURVEYED:
SURVEY BASE MAP:
CHECKED:

NUM.	REVISION	BY	DATE

30% SUBMITTAL 2/2022

NUM.	RECORD CHANGES PROVIDED	BY	DATE

APPROVED: M. EWBANK
PROJECT MANAGER: E. MCCLURE
DESIGNED: C. WEST
CAD DESIGN: P. ONSTOTT

PROJECT No.
CONTRACT No.

HERRERA

King County
Department of Natural Resources and Parks
Water and Land Resources Division
River and Floodplain Management Section
Christie True, Director

HERZMAN TO CAMP FREEMAN PROJECT

ACCESS, STAGING, AND TESC PLAN

SHEET **8** OF **30** SHEETS

XXXX-XX

Filename: KCDNRPxTB.dwt | Layout: Model | Last Edited: 2018/FEB/7
Location: I:\0-ACAD MASTER\TitleBlock

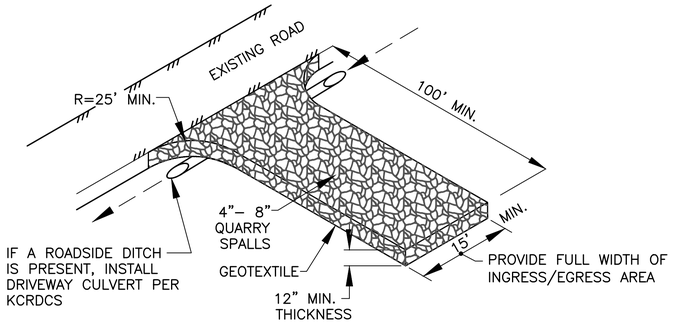

NOTES:

- PER KING COUNTY ROAD DESIGN AND CONSTRUCTION STANDARDS (KCRDCS), DRIVEWAYS SHALL BE PAVED TO EDGE OF R–O–W PRIOR TO INSTALLATION OF THE CONSTRUCTION ENTRANCE TO AVOID DAMAGING OF THE ROADWAY.
- IT IS RECOMMENDED THAT THE ENTRANCE BE CROWNED SO THAT RUNOFF DRAINS OFF THE PAD.

STABILIZED CONSTRUCTION ENTRANCE DETAIL (1)

NTS

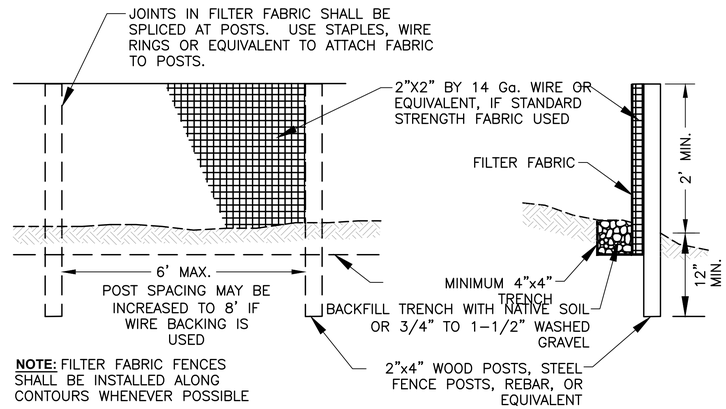

NOTE: FILTER FABRIC FENCES SHALL BE INSTALLED ALONG CONTOURS WHENEVER POSSIBLE

SILT FENCE DETAIL (2)

nts

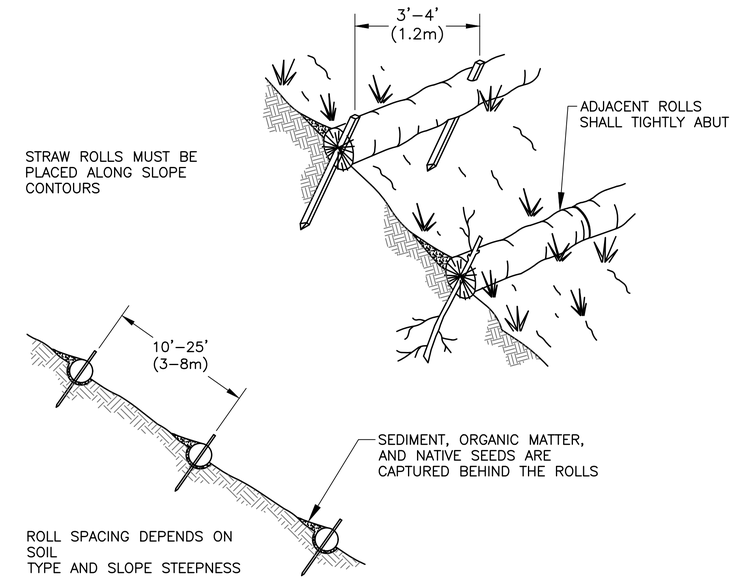

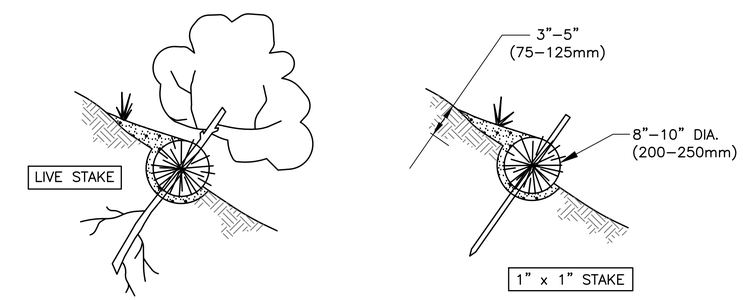

NOTES:

1. STRAW ROLL INSTALLATION REQUIRES THE PLACEMENT AND SECURE STAKING OF THE ROLL IN A TRENCH, 3" x 5" (75–125mm) DEEP, DUG ON CONTOUR.
2. RUNOFF MUST NOT BE ALLOWED TO RUN UNDER OR AROUND ROLL.

STRAW WATTLES DETAIL (3)

nts

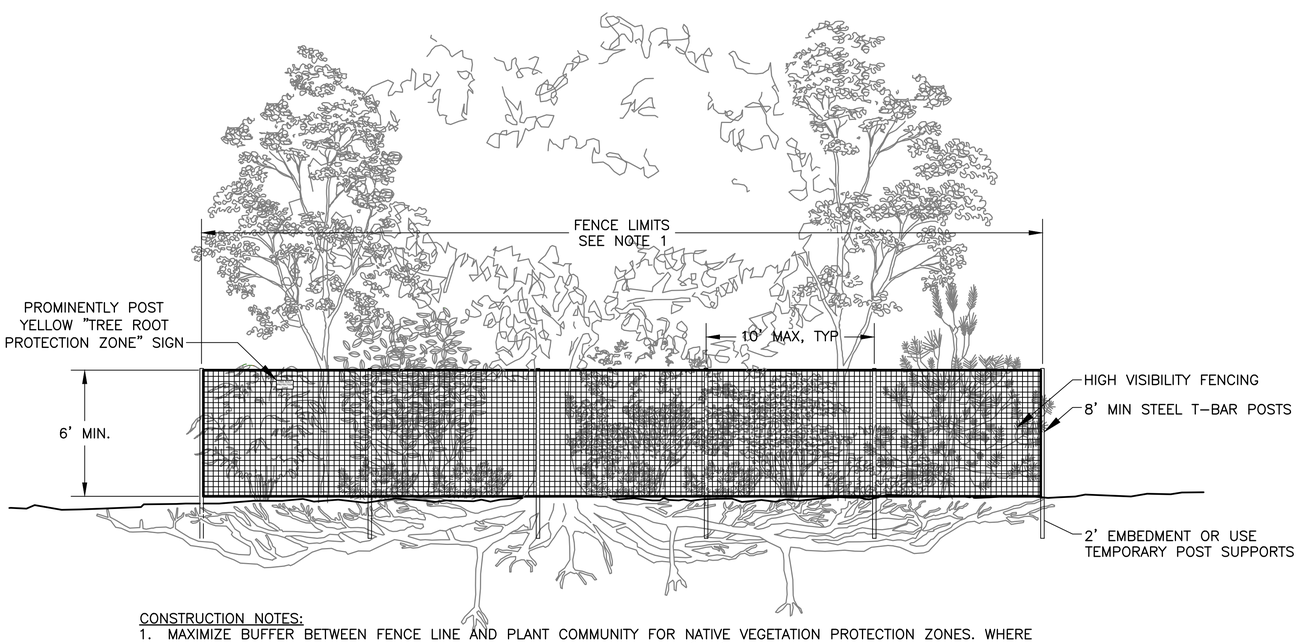

CONSTRUCTION NOTES:

1. MAXIMIZE BUFFER BETWEEN FENCE LINE AND PLANT COMMUNITY FOR NATIVE VEGETATION PROTECTION ZONES. WHERE POSSIBLE, PLACE FENCING OUTSIDE OF THE ROOT PROTECTION ZONE (RPZ) FOR TREES. RPZ IS DEFINED AS AREA EQUAL TO A 1–FOOT RADIUS FROM THE BASE OF THE TREE'S TRUNK FOR EACH 1–INCH OF THE TREE'S DIAMETER AT 4.5 FEET ABOVE GRADE (DIAMETER AT BREAST HEIGHT: DBH).

DETAIL – NATIVE VEGETATION PROTECTION FENCING (4)

SCALE: NTS

Know what's below.
Call before you dig.
(UNDERGROUND UTILITY LOCATIONS ARE APPROX.)

FIELD BOOK:
SURVEYED:
SURVEY BASE MAP:
CHECKED:

NUM.	REVISION	BY	DATE

30% SUBMITTAL 2/2022

NUM.	RECORD CHANGES PROVIDED	BY	DATE

APPROVED: M. EWBANK
PROJECT MANAGER: E. MCCLURE
DESIGNED: C. WEST
CAD DESIGN: P. ONSTOTT

PROJECT No.
CONTRACT No.

HERRERA

King County
Department of Natural Resources and Parks
Water and Land Resources Division
River and Floodplain Management Section
Christie True, Director

HERZMAN TO CAMP FREEMAN PROJECT

TESC DETAILS

SHEET **9** OF **30** SHEETS

XXXX-XX

Filename: KCDNRPxTB.dwt | Layout: Model | Last Edited: 2018/FEB/7
Location: I:\0-ACAD MASTER\TitleBlock

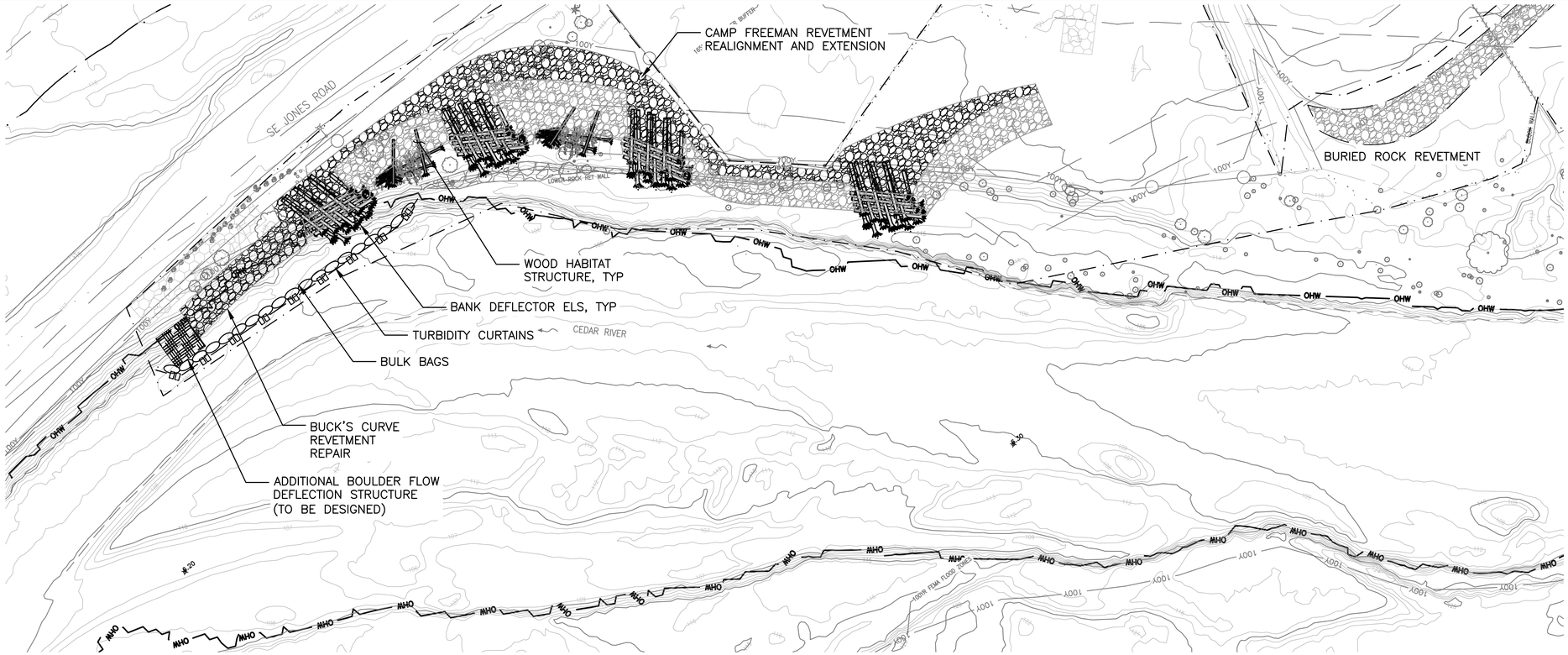

NOTES

1.

40 0 40
SCALE IN FEET

WATER MANAGEMENT NOTES:

1. WATER MANAGEMENT METHODS SHALL BE USED TO DIVERT FLOW AND ISOLATE WORK AREAS AS NECESSARY TO COMPLETE CONSTRUCTION OF NEW CHANNELS AND ELSs AND TO AVOID IMPACTS TO WATER QUALITY. THE CONTRACTOR SHALL SUBMIT A WATER MANAGEMENT AND WORK AREA ISOLATION PLAN FOR APPROVAL BY THE ENGINEER 15 WORKING DAYS BEFORE INITIATING ANY ONSITE CONSTRUCTION ACTIVITIES. THIS PLAN SHALL ADDRESS SITE SPECIFIC TECHNIQUES AND METHODS FOR TEMPORARILY DIVERTING RIVER FLOW AND OTHER FLOW THAT MAY BE OCCURRING IN SMALL TRIBUTARY STREAMS, AND ISOLATING WORK AREAS, AND FOR DEWATERING DURING EXCAVATIONS.
2. DIVERSION AND ISOLATION MEANS SHALL CONSIST OF TURBIDITY FENCE, BULK BAGS, BLADDER DAMS OR APPROVED EQUAL AS NECESSARY TO ALLOW CONSTRUCTION WHILE PREVENTING IMPACTS TO WATER QUALITY. A COMBINATION OF ISOLATION MEASURES MAY BE USED AS NECESSARY.
3. CONTRACTOR SHALL CONSTRUCT TEMPORARY FLOW DIVERSION MEASURES STARTING AT UPSTREAM END OF WORK AREA TO DIRECT WATER AWAY FROM WORK AREA.
4. CONSTRUCTION WITHIN THE ISOLATED WORK AREA MAY NOT COMMENCE UNTIL THE OWNER HAS COMPLETED ALL FISH EXCLUSION ACTIVITIES.
5. GROUND WATER ENCOUNTERED DURING EXCAVATIONS MAY BE PUMPED AS NECESSARY TO INFILTRATION AREAS APPROVED BY THE ENGINEER TO ALLOW CONSTRUCTION AND INSPECTION OF REVETMENTS, THE SETBACK LEVEE, FLOODPLAIN EXCAVATIONS, AND ELS CONSTRUCTION, AND TO FACILITATE THE REMOVAL OF SEDIMENT AND TURBIDITY FROM THE WATER. ANY DISCHARGE OF WATER RETURNING TO ANY WATERS OF THE STATE SHALL NOT EXCEED THE WATER QUALITY REQUIREMENTS SET FORTH IN THE PROJECT PERMITS.
6. GROUND WATER MAY BE PUMPED TO INFILTRATION AREAS AND DISCHARGED THROUGH AN ENERGY DISSIPATOR, LEVEL SPREADER, SILT BAGS, OR OTHER MEANS AS APPROVED BY THE ENGINEER. WATER DISCHARGED OR INFILTRATED IN WATER MANAGEMENT AREAS SHALL NOT CAUSE EROSION OR RESULT IN TURBIDITY IMPACTS TO WATERS OF THE STATE.
7. GROUND WATER MAY NOT BE PUMPED DIRECTLY TO WETLANDS OR THE RIVER WITHOUT PRIOR APPROVAL FROM THE ENGINEER. WATER SHALL BE DISCHARGED IN ACCORDANCE WITH THE PLANS, SPECIFICATIONS AND PERMITS.
8. THE ENGINEER SHALL BE NOTIFIED 24 HOURS IN ADVANCE OF ANY WATER PUMPING ACTIVITIES.
9. CONSTRUCTION DEWATERING SHALL BE MAINTAINED 24 HOURS PER DAY DURING CONSTRUCTION AND MONITORED BY THE CONTRACTOR DURING NON–WORKING HOURS.
10. THE IMPLEMENTATION OF WATER MANAGEMENT PLANS AND THE CONSTRUCTION, MAINTENANCE, REPLACEMENT, AND UPGRADING OF WATER MANAGEMENT FACILITIES IS THE RESPONSIBILITY OF THE CONTRACTOR UNTIL ALL CONSTRUCTION IS APPROVED.
11. THE WATER MANAGEMENT MEASURES SHOWN ON THIS PLAN ARE THE MINIMUM REQUIREMENTS FOR ANTICIPATED SITE CONDITIONS. DURING THE CONSTRUCTION PERIOD, THE CONTRACTOR'S WATER MANAGEMENT MEASURES SHALL BE UPGRADED AS NEEDED FOR UNEXPECTED STORM EVENTS AND MODIFIED TO ACCOUNT FOR CHANGING SITE CONDITIONS (E.G., ADDITIONAL SUMP PUMPS, RELOCATION OF DITCHES AND SILT FENCES, ETC.).
12. IF DEWATERING ISOLATED WORK AREAS TO COMPLETE WORK THEN COORDINATE DEWATERING WITH THE OWNER TO ALLOW FISH EXCLUSION ACTIVITIES TO BE COMPLETED BY THE OWNER BEFORE THE ISOLATED AREA BECOMES DEWATERED AND FISH ARE STRANDED.
13. ENSURE WETTED CHANNELS LOCATED DOWNSTREAM OF ISOLATED WORK AREAS REMAIN WETTED DURING DEWATERING ACTIVITIES.
14. IF PUMPING WATER FROM NON–ISOLATED WETTED AREAS OF THE CHANNEL TO KEEP OTHER AREAS WETTED WHILE WORK IS COMPLETED THEN THE PUMP INTAKE HOSE SHALL BE FITTED WITH A WDFW APPROVED FISH SCREEN.
15. TURBIDITY CURTAINS TO BE USED WHERE WATER DETPH EXCEEDS 4 FEET.

811
Know what's below.
Call before you dig.
(UNDERGROUND UTILITY LOCATIONS ARE APPROX.)

FIELD BOOK:
SURVEYED:
SURVEY BASE MAP:
CHECKED:

NUM.	REVISION	BY	DATE

30% SUBMITTAL 2/2022

NUM.	RECORD CHANGES PLOTTED	BY	DATE

APPROVED: M. EWBANK
PROJECT MANAGER: E. MCCLURE
DESIGNED: C. WEST
CAD DESIGN: P. ONSTOTT

PROJECT No.
CONTRACT No.

HERRERA

King County
Department of Natural Resources and Parks
Water and Land Resources Division
River and Floodplain Management Section
Christie True, Director

HERZMAN TO CAMP FREEMAN PROJECT

WATER MANAGEMENT PLAN

SHEET **10** OF **30** SHEETS

XXXX-XX

Filename: KCDNRPxTB.dwt | Layout: Model | Last Edited: 2018/FEB/7
Location: I:\0-ACAD MASTER\TitleBlock

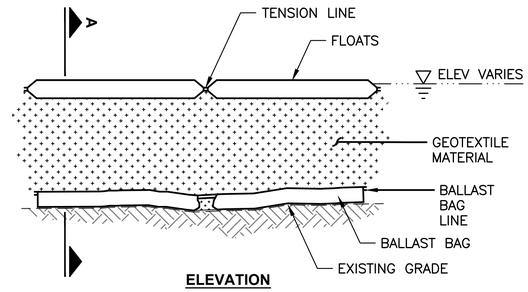

ELEVATION

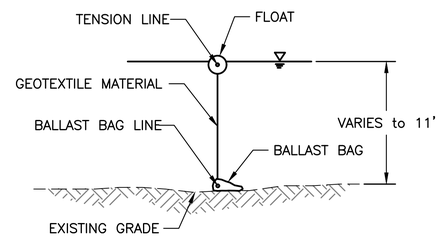

SECTION A

DETAIL - TURBIDITY CURTAIN

SCALE: NTS

1 / -

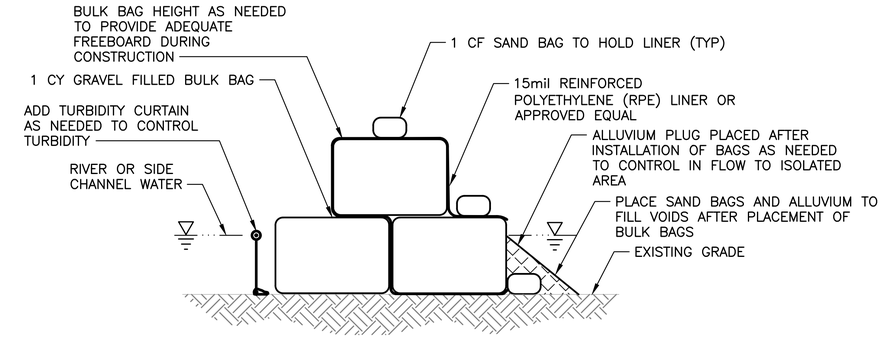

DETAIL - TYPICAL BULK BAG ISOLATION

SCALE: NTS

1 / -

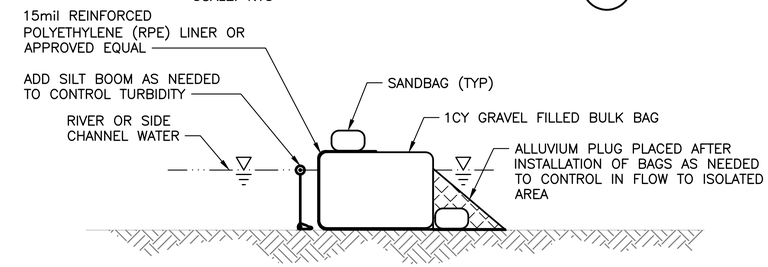

DETAIL - TYPICAL SINGLE BULK BAG ISOLATION

SCALE: NTS

2 / -

BULK BAG NOTES:

1. PLACE/REMOVE ALLUVIUM AS LAST/FIRST STEP OF BULK BAG ISOLATION SYSTEM INSTALLATION/REMOVAL.
2. ONLY INSTALL SINGLE BULK BAG ISOLATION WHERE WATER SURFACE EXPECTED TO BE LESS THAN 2 FT.
3. TRANSITION LINER FROM EXTERIOR (UPSTREAM END) OF ISOLATION TO INTERIOR OF ISOLATION APPROXIMATELY 1/2 THE LENGTH OF THE ISLOLATION WHERE RIVER WATER INFILTRATION INTO THE WORK AREA TRANSITIONS TO EXFILTRATION.
4. TRANSITION ISOLATION HEIGHT INTO BANKS USING SAND BAGS.

Know what's below.
Call before you dig.
(UNDERGROUND UTILITY LOCATIONS ARE APPROX.)

FIELD BOOK:
SURVEYED:
SURVEY BASE MAP:
CHECKED:

NUM.	REVISION	BY	DATE

30% SUBMITTAL 2/2022

NUM.	RECORD CHANGES - REVISED	BY	DATE

APPROVED: M. EWBANK
PROJECT MANAGER: E. MCCLURE
DESIGNED: C. WEST
CAD DESIGN: P. ONSTOTT

PROJECT No.
CONTRACT No.

HERRERA

King County
Department of Natural Resources and Parks
Water and Land Resources Division
River and Floodplain Management Section
Christie True, Director

HERZMAN TO CAMP FREEMAN PROJECT

WATER MANAGEMENT DETAILS

SHEET **11** OF **30** SHEETS

XXXX-XX

Filename: KCDNRPxTB.dwt | Layout: Model | Last Edited: 2018/FEB/7
Location: I:\0-ACAD MASTER\TitleBlock

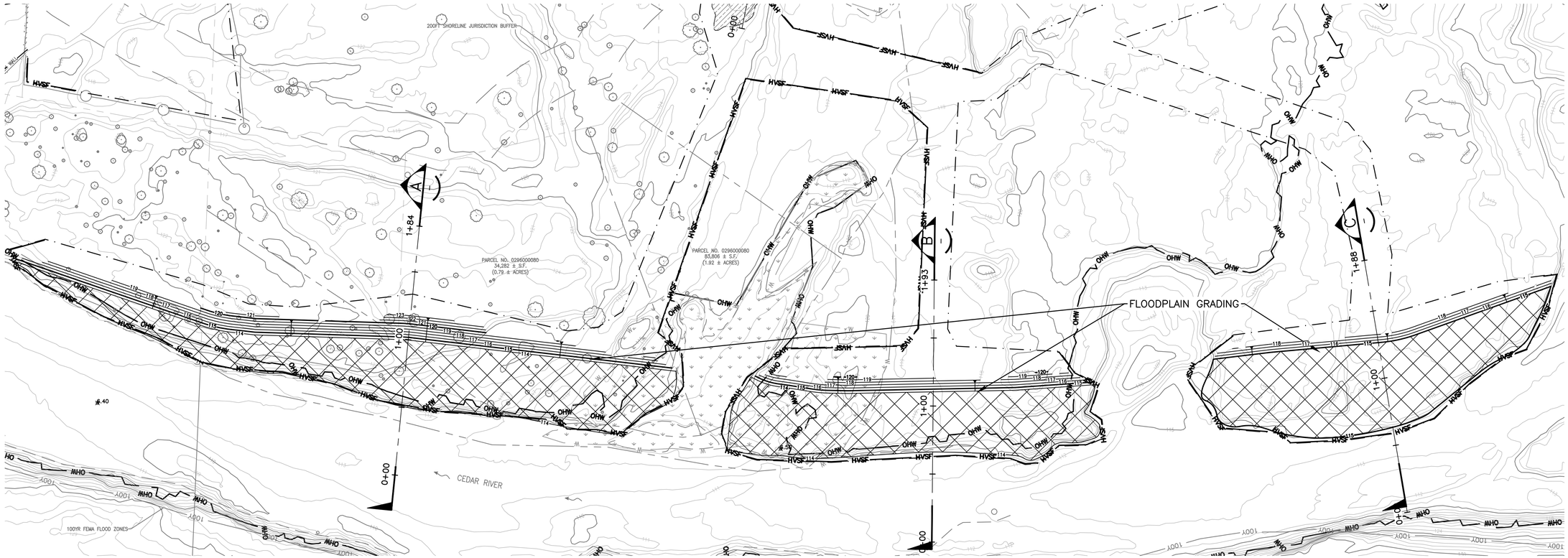

PLAN VIEW

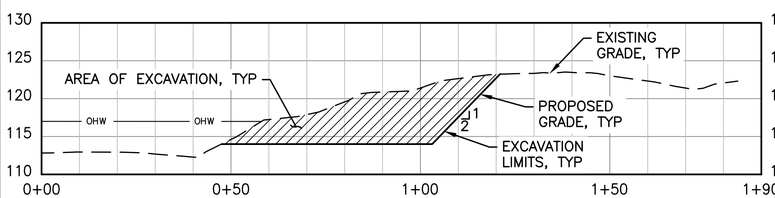

SECTION A
H. SCALE: 1"=20'
V. SCALE: 1"=10'

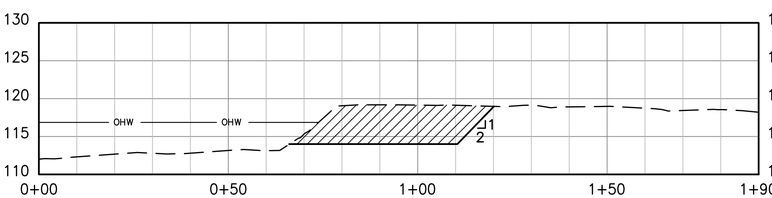

SECTION B
H. SCALE: 1"=10'
V. SCALE: 1"=10'

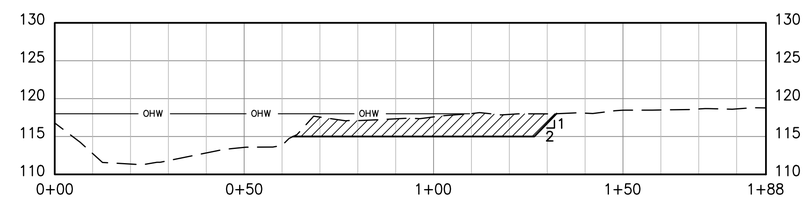

SECTION C
H. SCALE: 1"=10'
V. SCALE: 1"=10'

NOTES

1. WATER MANAGEMENT PLAN MAY BE REQUIRED FOR THE FLOODPLAIN GRADING DEPENDING ON RIVER LEVELS AND CONTRACTOR SEQUENCING AND MEANS AND METHODS.

Know what's below.
Call before you dig.
(UNDERGROUND UTILITY LOCATIONS ARE APPROX.)

FIELD BOOK:
SURVEYED:
SURVEY BASE MAP:
CHECKED:

NUM.	REVISION	BY	DATE

30% SUBMITTAL 2/2022

NUM.	RECORD CHANGES PLOTTED	BY	DATE

APPROVED: M. EWBANK
PROJECT MANAGER: E. MCCLURE
DESIGNED: C. WEST
CAD DESIGN: P. ONSTOTT

PROJECT No.
CONTRACT No.

HERRERA

King County
Department of Natural Resources and Parks
Water and Land Resources Division
River and Floodplain Management Section
Christie True, Director

HERZMAN TO CAMP FREEMAN PROJECT

FLOODPLAIN GRADING

SHEET **12** OF **30** SHEETS

XXXX-XX

Filename: KCDNRPxTB.dwt | Layout: Model | Last Edited: 2018/FEB/7
Location: I:\0-ACAD MASTER\TitleBlock

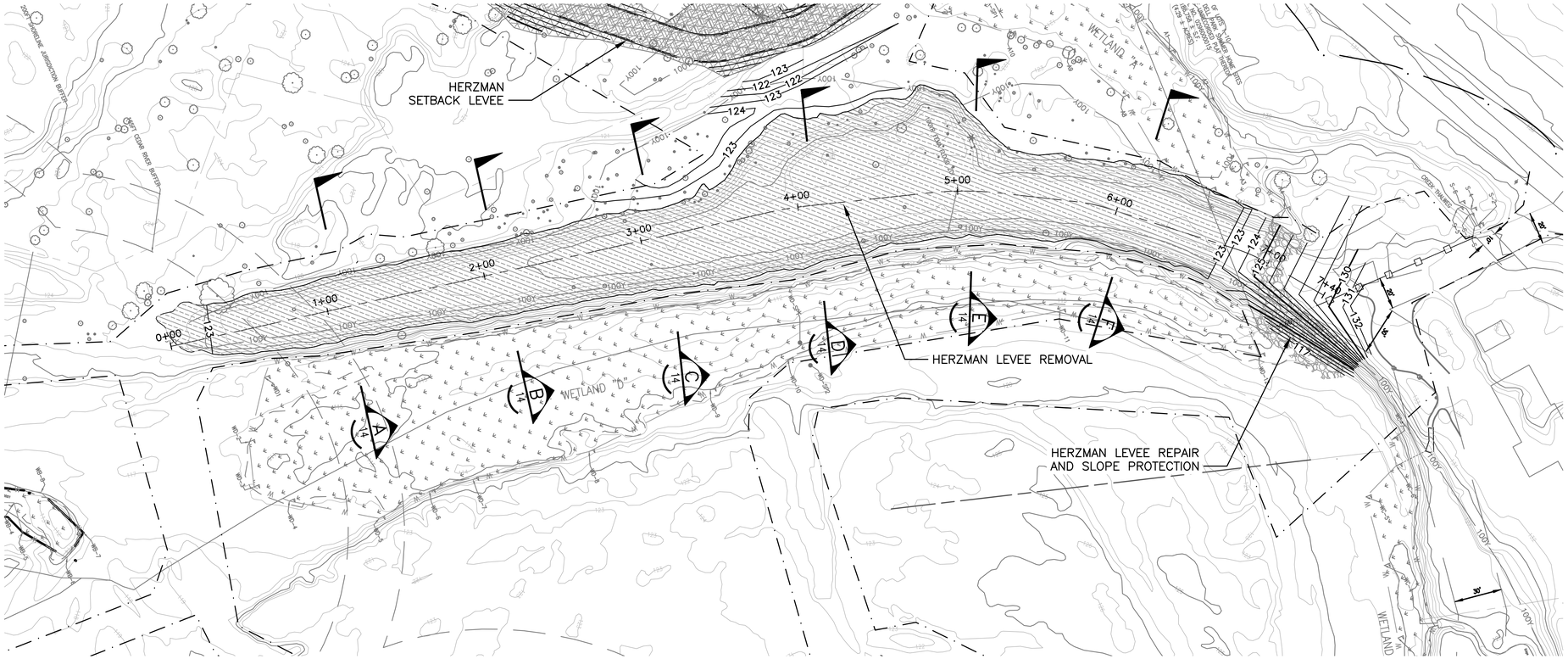

PLAN VIEW

40 0 40
SCALE IN FEET

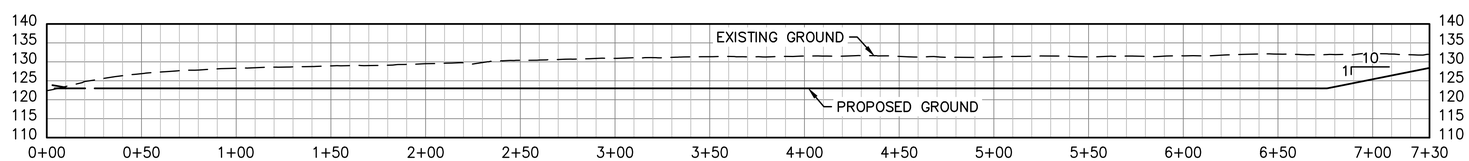

PROFILE VIEW

H. SCALE: 1"=40'
V. SCALE: 1"=20'

NOTES

1. ALL EXCAVATION WORK SHALL OCCUR FROM ATOP AND LANDWARD (WEST) OF THE LEVEE TO AVOID ANY EQUIPMENT OPERATIONS IN THE WETLAND ALONG THE TOE OF SLOPE ON THE EAST SIDE.

811
Know what's below.
Call before you dig.
(UNDERGROUND UTILITY LOCATIONS ARE APPROX.)

FIELD BOOK:
SURVEYED:
SURVEY BASE MAP:
CHECKED:

NUM.	REVISION	BY	DATE

30% SUBMITTAL 2/2022

NUM.	RECORD CHANGES APPROVED	BY	DATE

APPROVED: M. EWBANK
PROJECT MANAGER: E. MCCLURE
DESIGNED: C. WEST
CAD DESIGN: P. ONSTOTT

PROJECT No.
CONTRACT No.

HERRERA

King County
Department of Natural Resources and Parks
Water and Land Resources Division
River and Floodplain Management Section
Christie True, Director

HERZMAN TO CAMP FREEMAN PROJECT

HERZMAN LEVEE REMOVAL PLAN

SHEET **13** OF **30** SHEETS

XXXX-XX

Filename: KCDNRPxTB.dwt | Layout: Model | Last Edited: 2018/FEB/7
Location: I:\0-ACAD MASTER\TitleBlock

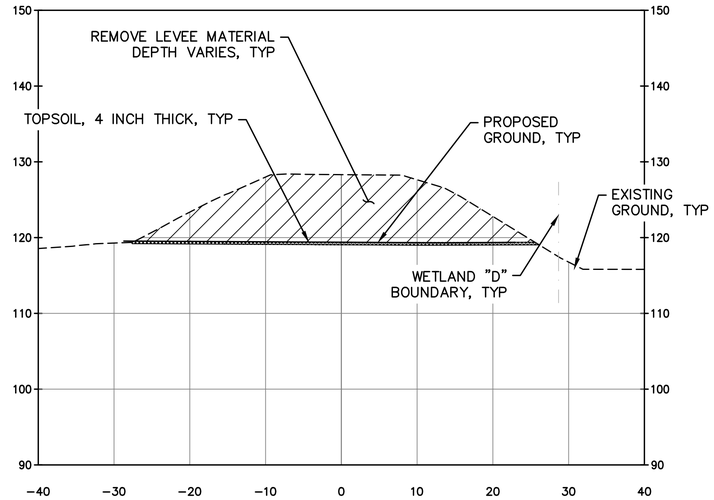

SECTION A
SCALE: 1"=10'
13

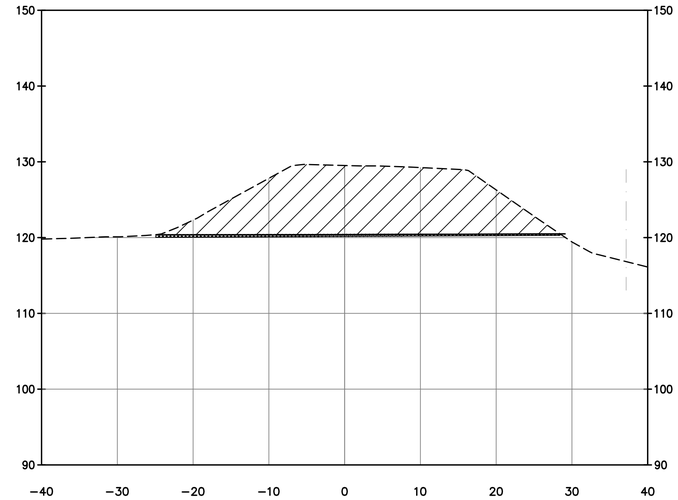

SECTION B
SCALE: 1"=10'
13

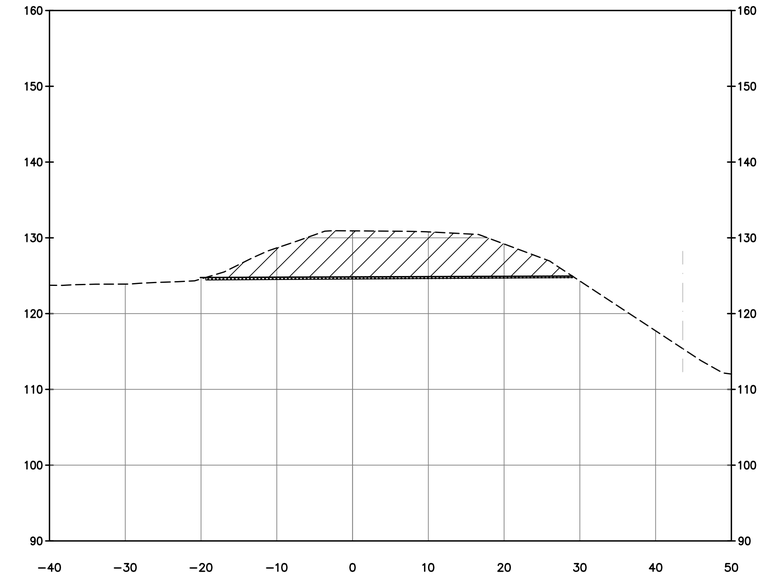

SECTION C
SCALE: 1"=10'
13

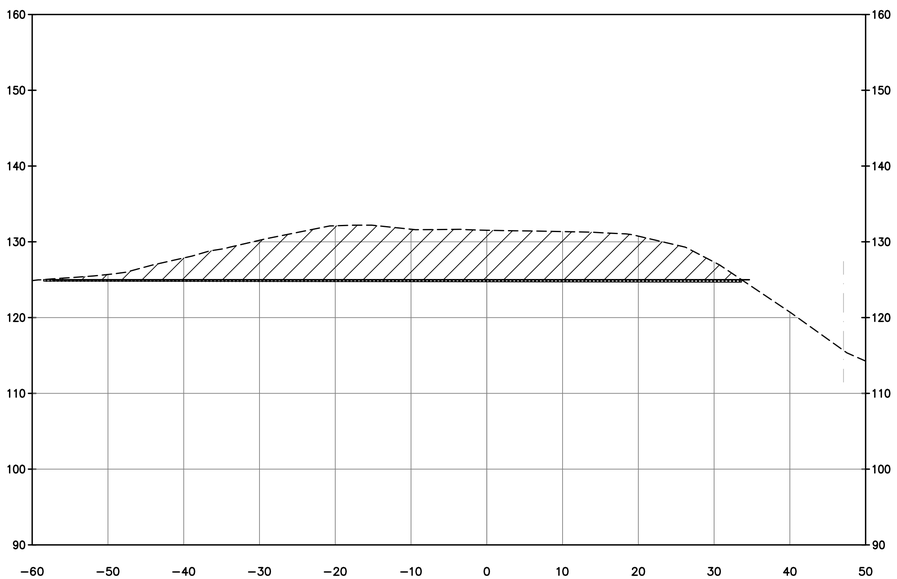

SECTION D
SCALE: 1"=10'
13

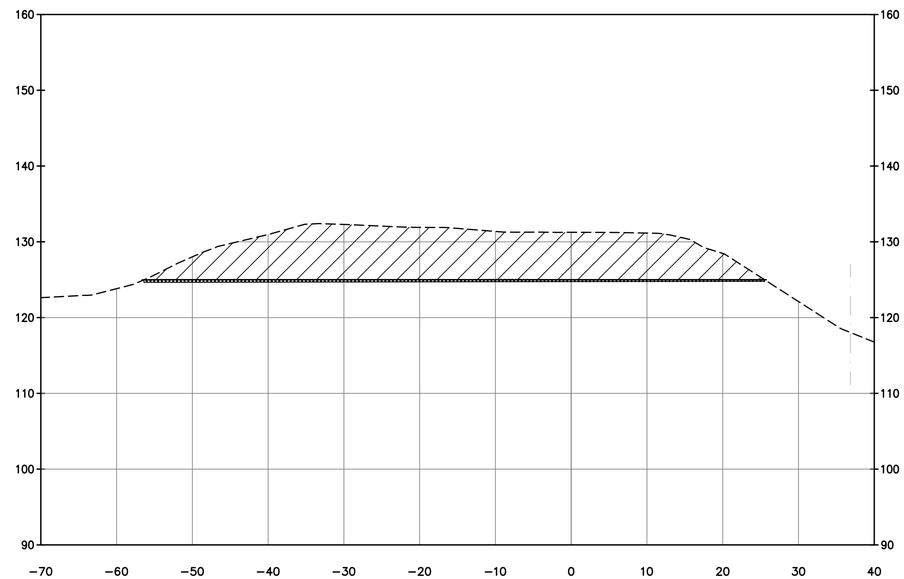

SECTION E
SCALE: 1"=10'
13

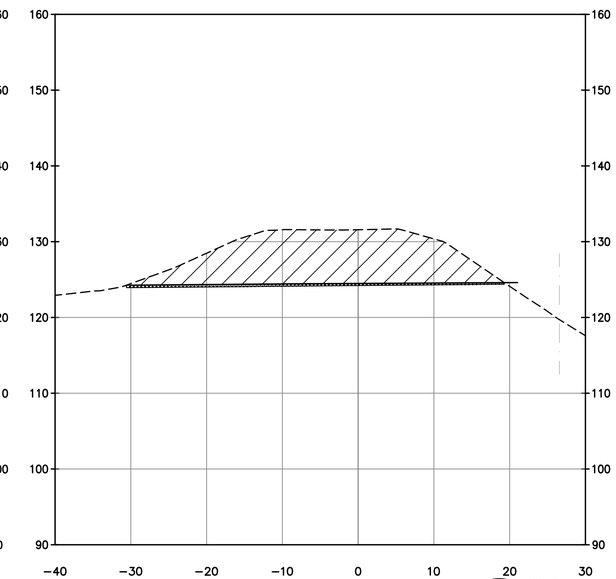

SECTION F
SCALE: 1"=10'
13

811
Know what's below.
Call before you dig.
(UNDERGROUND UTILITY LOCATIONS ARE APPROX.)

FIELD BOOK:
SURVEYED:
SURVEY BASE MAP:
CHECKED:

NUM.	REVISION	BY	DATE

30% SUBMITTAL
2/2022

NUM.	RECORD CHANGES PROVIDED	BY	DATE

APPROVED: M. EWBANK
PROJECT MANAGER: E. MCCLURE
DESIGNED: C. WEST
CAD DESIGN: P. ONSTOTT

PROJECT No.
CONTRACT No.

HERRERA

King County
Department of Natural Resources and Parks
Water and Land Resources Division
River and Floodplain Management Section
Christie True, Director

HERZMAN TO CAMP FREEMAN PROJECT

HERZMAN LEVEE REMOVAL SECTIONS

SHEET **14** OF **30** SHEETS

XXXX-XX

Filename: KCDNRPxTB.dwt | Layout: Model | Last Edited: 2018/FEB/7
Location: I:\0-ACAD MASTER\TitleBlock

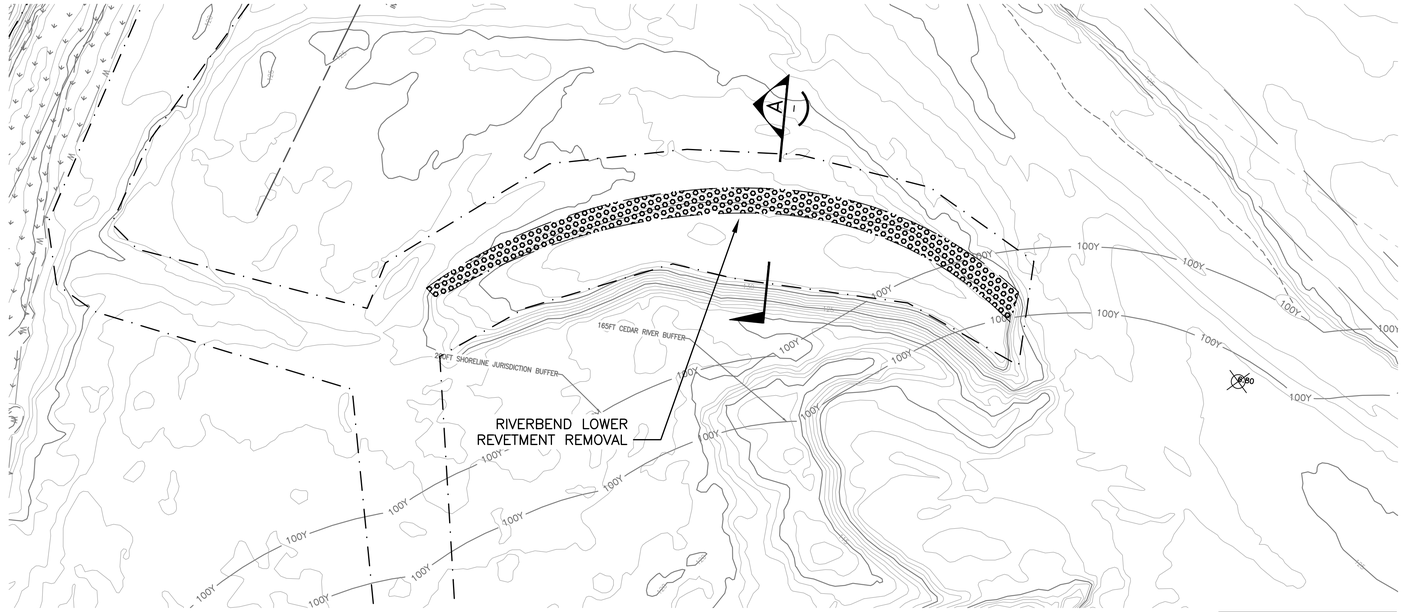

PLAN VIEW

40 0 40
SCALE IN FEET

N

NOTES

1. DEPTH OF RIPRAP ASSUMED 3 FEET. ACTUAL REMOVAL DEPTH UNKNOWN AND MAY VARY. CONTRACTOR SHALL REMOVE ALL VISIBLE RIPRAP IN THIS AREA. SEE SPECIFICATIONS FOR ADDITIONAL DETAIL.
2. BACKFILL TOE WITH NON-RIPRAP SPOILS TO MEET EXISTING GRADE.

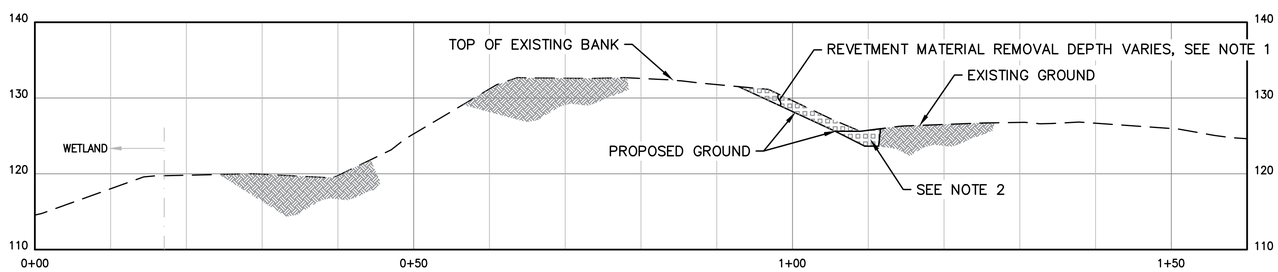

SECTION A
SCALE: 1"=10'

Know what's below.
Call before you dig.
(UNDERGROUND UTILITY LOCATIONS ARE APPROX.)

FIELD BOOK:
SURVEYED:
SURVEY BASE MAP:
CHECKED:

NUM.	REVISION	BY	DATE

30% SUBMITTAL 2/2022

NUM.	RECORD CHANGES PROVIDED	BY	DATE

APPROVED: M. EWBANK
PROJECT MANAGER: E. MCCLURE
DESIGNED: C. WEST
CAD DESIGN: P. ONSTOTT

PROJECT No.
CONTRACT No.

HERRERA

King County
Department of Natural Resources and Parks
Water and Land Resources Division
River and Floodplain Management Section
Christie True, Director

HERZMAN TO CAMP FREEMAN PROJECT

RIVERBEND REVETMENT REMOVAL PLAN AND SECTIONS

SHEET **15** OF **30** SHEETS

XXXX-XX

Filename: KCDNRPxTB.dwt | Layout: Model | Last Edited: 2018/FEB/7
Location: I:\0-ACAD MASTER\TitleBlock

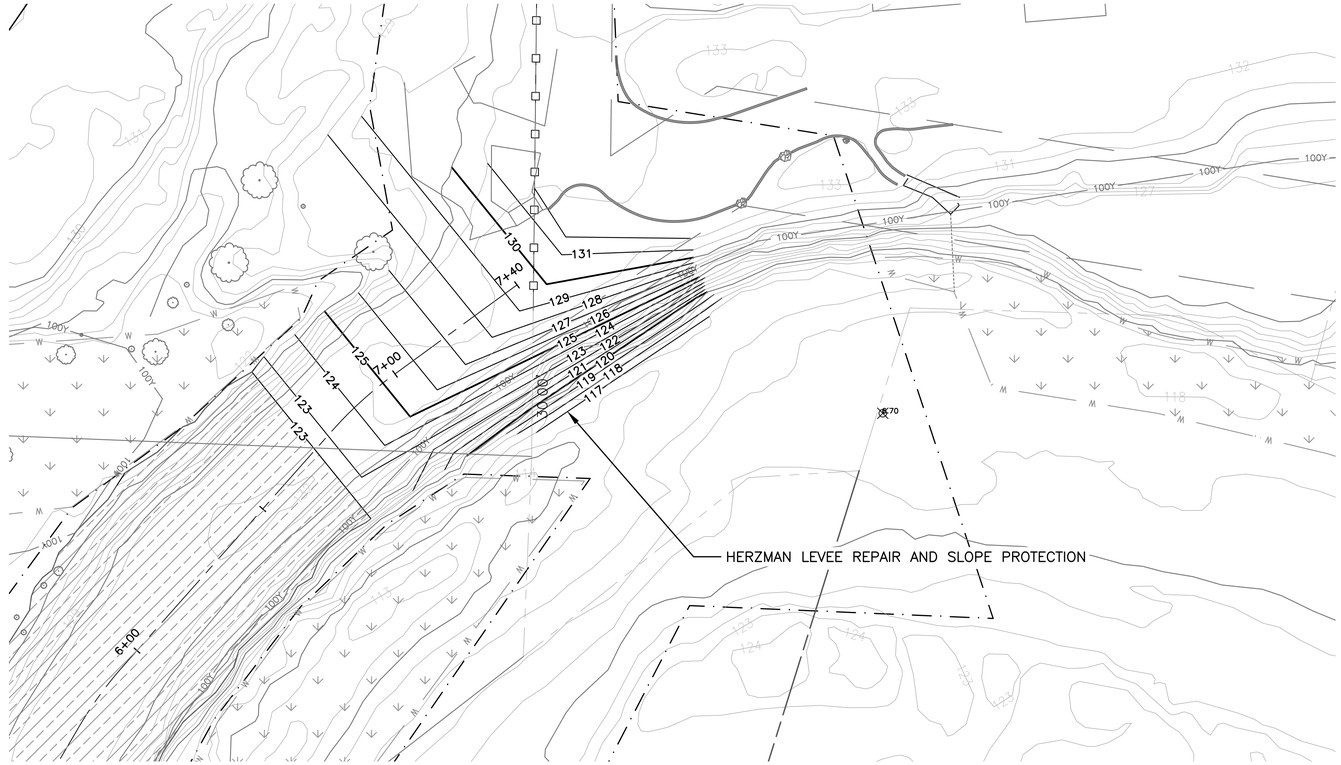

PLAN VIEW

20 0 20
SCALE IN FEET

NOTES

1. DO NOT REMOVE EXISTING ROCK AND SOIL ALONG FORMER RIVER BANK BEYOND THE NORTHEAST END OF HERZMAN LEVEE REMOVAL AREA.
2. SEE SECTION xx OF SPECIFICATIONS FOR REUSE OF SALVAGED ROCK AND REQUIRED ENGINEER INSPECTIONS DURING THE COURSE OF THIS WORK.
3. RIVER BED WILL BE DRY DURING CONSTRUCTION.
4. INSTALL 3 FEET OF ROCK FOR EROSION AND SCOUR PROTECTION CLASS B TOPPED WITH 1 FOOT OF TOPSOIL IN THE HERZMAN LEVEE REPAIR AND SLOPE PROTECTION AREA.
5. FINAL GRADES SHOWN ARE THE TOP OF TOPSOIL.

811
Know what's below.
Call before you dig.
(UNDERGROUND UTILITY LOCATIONS ARE APPROX.)

FIELD BOOK:
SURVEYED:
SURVEY BASE MAP:
CHECKED:

NUM.	REVISION	BY	DATE

30% SUBMITTAL 2/2022

NUM.	RECORD CHANGES PROVED	BY	DATE

APPROVED: M. EWBANK
PROJECT MANAGER: E. MCCLURE
DESIGNED: C. WEST
CAD DESIGN: P. ONSTOTT

PROJECT No.
CONTRACT No.

HERRERA

King County
Department of Natural Resources and Parks
Water and Land Resources Division
River and Floodplain Management Section
Christie True, Director

HERZMAN TO CAMP FREEMAN PROJECT

HERZMAN LEVEE REPAIR AND SLOPE STABILIZATION PLAN AND SECTIONS

SHEET **16** OF **30** SHEETS

XXXX-XX

Filename: KCDNRPxTB.dwt | Layout: Model | Last Edited: 2018/FEB/7
Location: I:\0-ACAD MASTER\TitleBlock

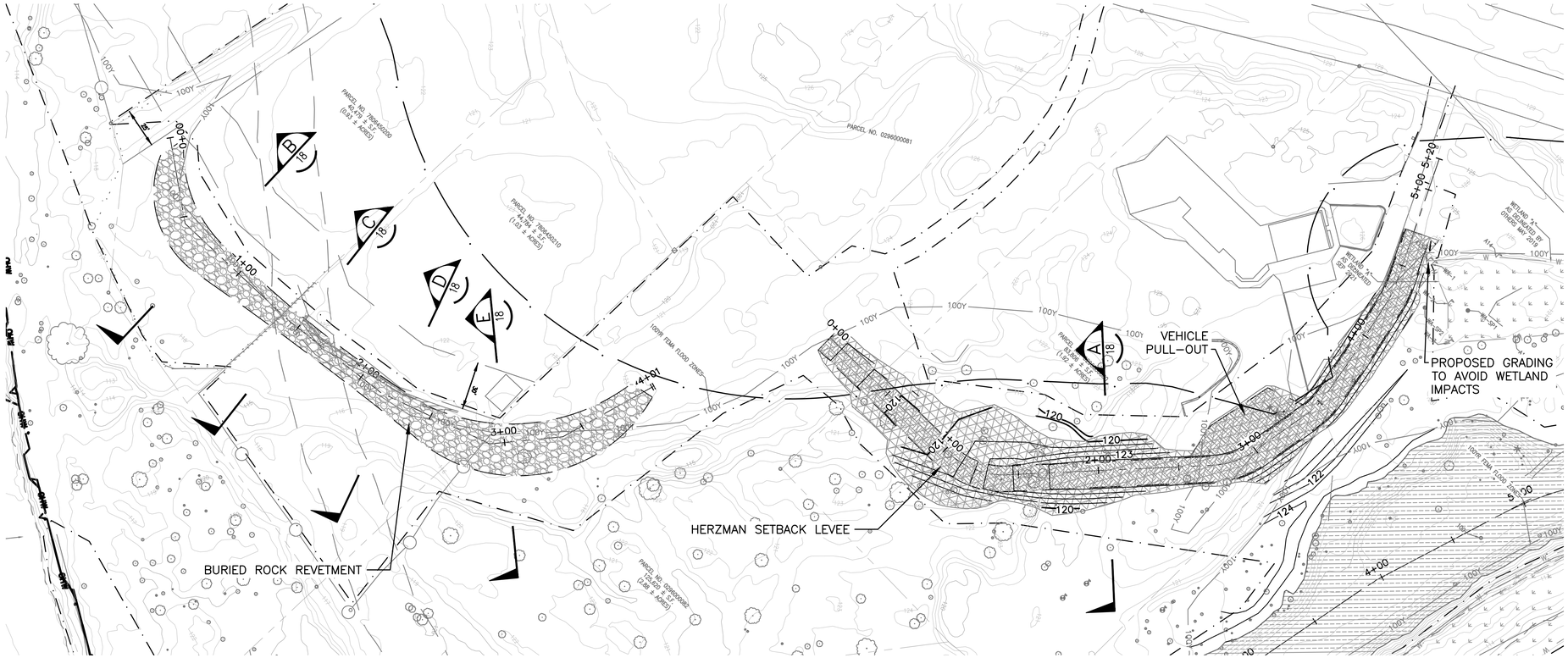

PLAN VIEW

40 0 40
SCALE IN FEET

NOTES

1. NO STAGING ALLOWED ON RESIDENT'S DRIVEWAY OR YARD AREAS.

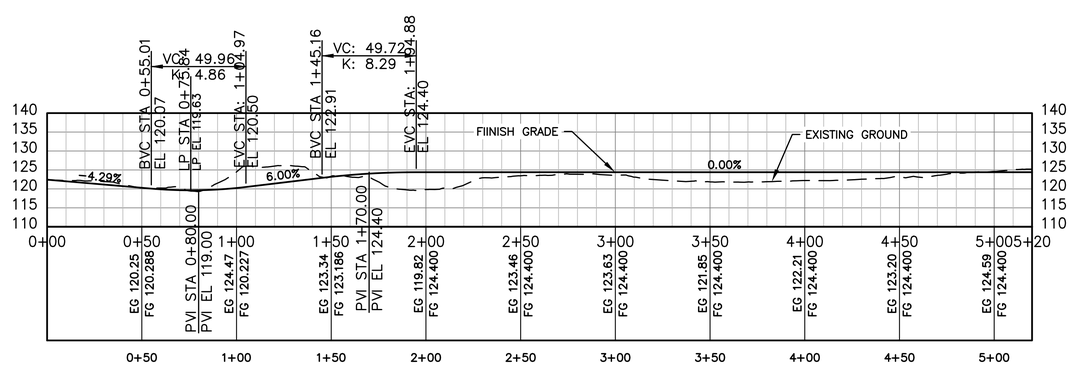

PROFILE VIEW - HERZMAN SETBACK LEVEE

H. SCALE: 1"=40'
V. SCALE: 1"=20'

811
Know what's below.
Call before you dig.
(UNDERGROUND UTILITY LOCATIONS ARE APPROX.)

FIELD BOOK:
SURVEYED:
SURVEY BASE MAP:
CHECKED:

NUM.	REVISION	BY	DATE

30% SUBMITTAL 2/2022

NUM.	RECORD CHANGES ON PLANS	BY	DATE

APPROVED: M. EWBANK
PROJECT MANAGER: E. MCCLURE
DESIGNED: C. WEST
CAD DESIGN: P. ONSTOTT

PROJECT No.
CONTRACT No.

HERRERA

King County
Department of Natural Resources and Parks
Water and Land Resources Division
River and Floodplain Management Section
Christie True, Director

HERZMAN TO CAMP FREEMAN PROJECT

HERZMAN SETBACK LEVEE AND BURIED ROCK REVETMENT PLAN

SHEET **17** OF **30** SHEETS

XXXX-XX

Filename: KCDNRPxTB.dwt | Layout: Model | Last Edited: 2018/FEB/7
Location: I:\0-ACAD MASTER\TitleBlock

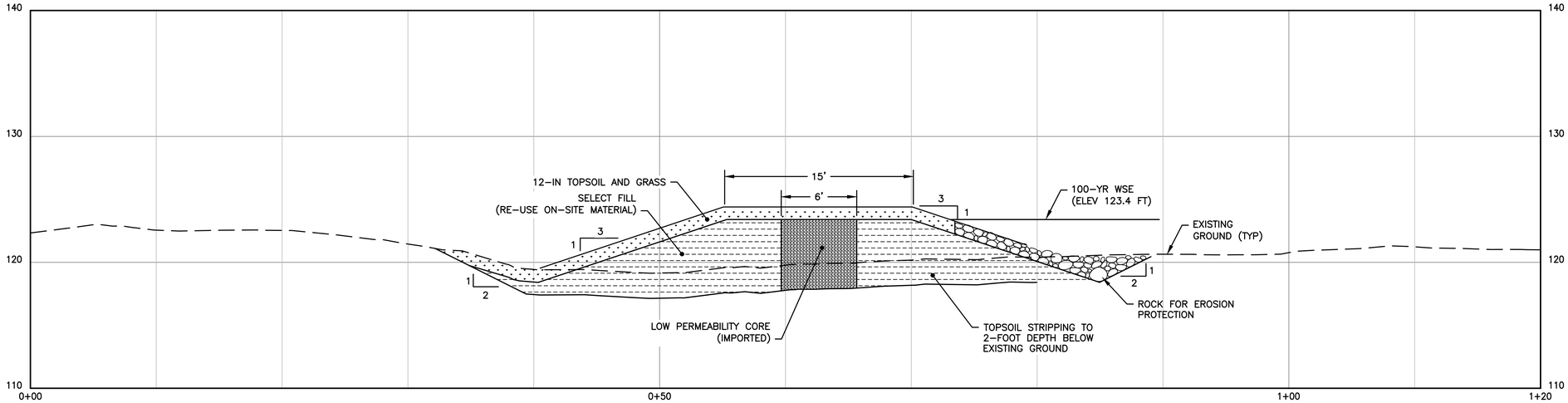

SECTION – HERZMAN SETBACK LEVEE (A / 17)

HORZ. SCALE: 1" = 5'
VERT. SCALE: 1" = 5'

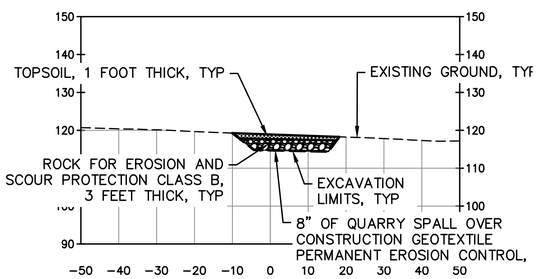

SECTION – BURIED ROCK REVETMENT (B / 17)

HORZ. SCALE: 1" = 20'
VERT. SCALE: 1" = 20'

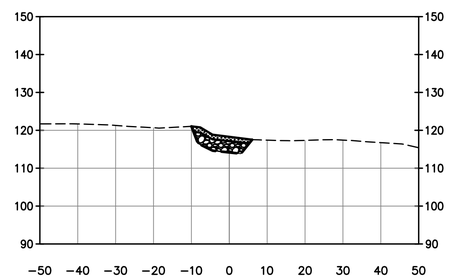

SECTION – BURIED ROCK REVETMENT (C / 17)

HORZ. SCALE: 1" = 20'
VERT. SCALE: 1" = 20'

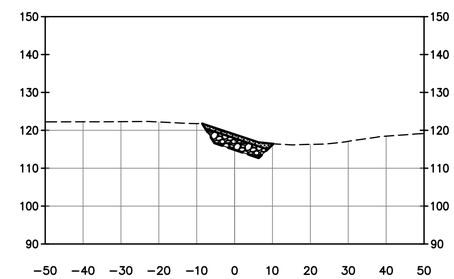

SECTION – BURIED ROCK REVETMENT (D / 17)

HORZ. SCALE: 1" = 20'
VERT. SCALE: 1" = 20'

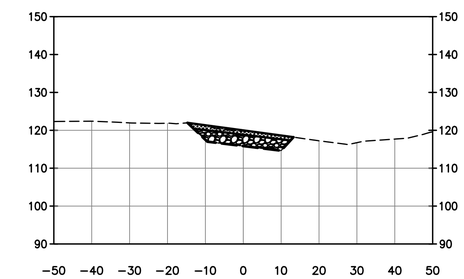

SECTION – BURIED ROCK REVETMENT (E / 17)

HORZ. SCALE: 1" = 20'
VERT. SCALE: 1" = 20'

NOTES:

1. TYPICAL SECTION IS PRELIMINARY AND BASED ON EXISTING GEOTECHNICAL INFORMATION. SECTION DETAILS SUBJECT TO CHANGE BASED ON GEOTECHNICAL EXPLORATIONS AND ANALYSIS AFTER 30% DESIGN.
2. SELECT FILL MAY CONSIST OF EXCAVATED MATERIAL FROM ON-SITE IF SOILS MEET SPECIFICATIONS AND APPROVED BY PROJECT REPRESENTATIVE.
3. LEVEE CORE FILL SHALL CONSIST OF IMPORTED CL, ML, SM, OR SC WITH MAXIMUM PARTICLE SIZE OF 2 INCHES MINIMUM 30% FINES, AND BE FREE OF ORGANICS AND OTHER DELETERIOUS MATERIAL.
4. SEE SECTION xx AND xx OF THE SPECIFICATIONS FOR COMPACTION REQUIREMENTS.

811
Know what's below.
Call before you dig.
(UNDERGROUND UTILITY LOCATIONS ARE APPROX.)

FIELD BOOK:
SURVEYED:
SURVEY BASE MAP:
CHECKED:

NUM.	REVISION	BY	DATE

30% SUBMITTAL 2/2022

NUM.	RECORD CHANGES PROVIDED	BY	DATE

APPROVED: M. EWBANK
PROJECT MANAGER: E. MCCLURE
DESIGNED: C. WEST
CAD DESIGN: P. ONSTOTT

PROJECT No.
CONTRACT No.

HERRERA

King County
Department of Natural Resources and Parks
Water and Land Resources Division
River and Floodplain Management Section
Christie True, Director

HERZMAN TO CAMP FREEMAN PROJECT

HERZMAN SETBACK LEVEE AND BURIED ROCK REVETMENT SECTIONS

SHEET **18** OF **30** SHEETS

XXXX-XX

Filename: KCDNRPxTB.dwt | Layout: Model | Last Edited: 2018/FEB/7
Location: I:\0-ACAD MASTER\TitleBlock

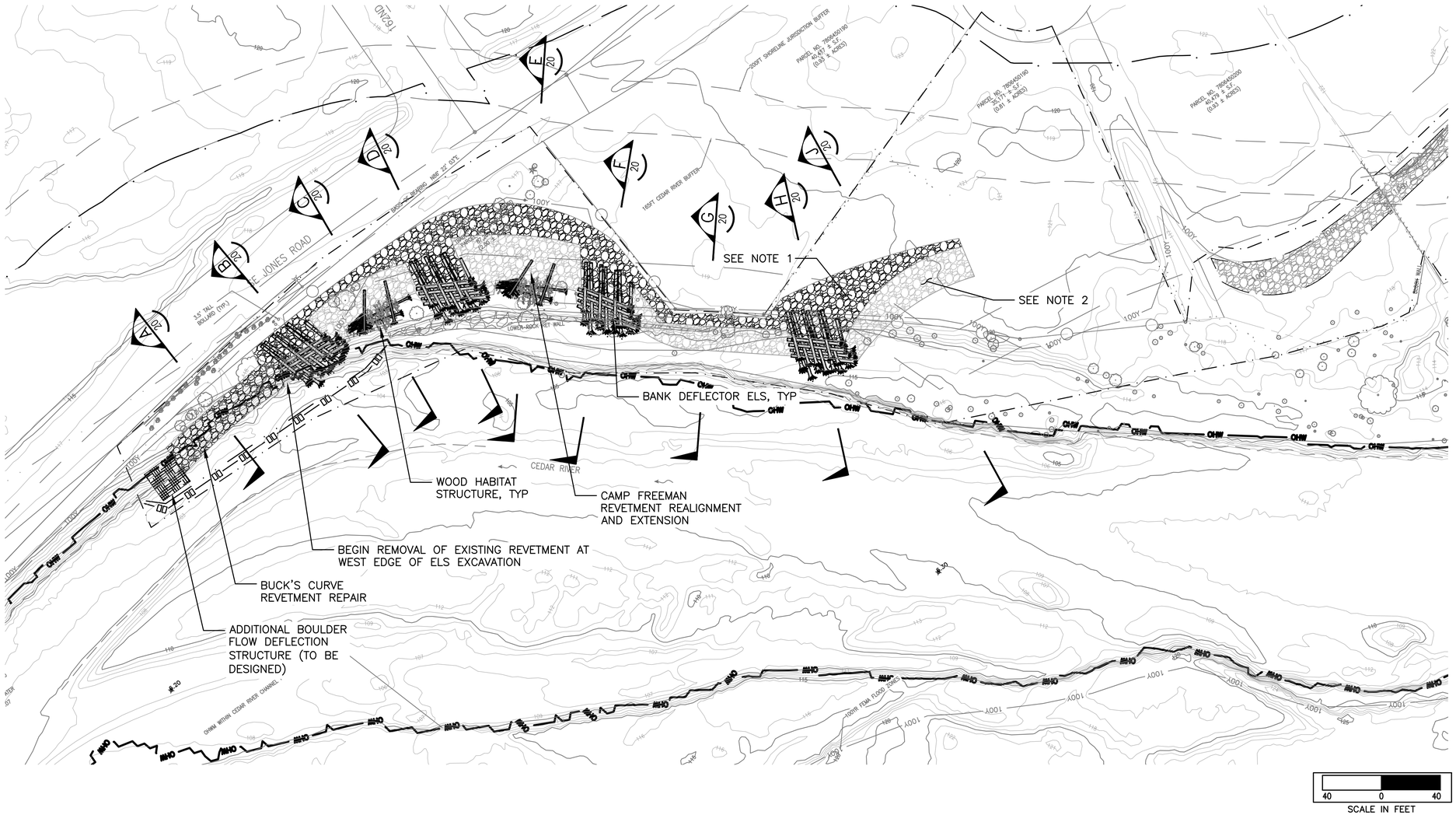

NOTES:

1. REVETMENT SHOWN IS NEAR PROPOSED GRADE.
2. REVETMENT SHOWN IS BELOW GRADE AT DESIGN SLOPE.

Know what's below.
Call before you dig.
(UNDERGROUND UTILITY LOCATIONS ARE APPROX.)

FIELD BOOK:
SURVEYED:
SURVEY BASE MAP:
CHECKED:

NUM.	REVISION	BY	DATE

30% SUBMITTAL 2/2022

NUM.	RECORD CHANGES	BY	DATE

APPROVED: M. EWBANK
PROJECT MANAGER: E. MCCLURE
DESIGNED: C. WEST
CAD DESIGN: P. ONSTOTT

PROJECT No.
CONTRACT No.

HERRERA

King County
Department of Natural Resources and Parks
Water and Land Resources Division
River and Floodplain Management Section
Christie True, Director

HERZMAN TO CAMP FREEMAN PROJECT

BUCK'S CURVE REVETMENT REPAIR AND CAMP FREEMAN REVETMENT PLAN

SHEET **19** OF **30** SHEETS

XXXX-XX

Filename: KCDNRPxTB.dwt | Layout: Model | Last Edited: 2018/FEB/7
Location: I:\0-ACAD MASTER\TitleBlock

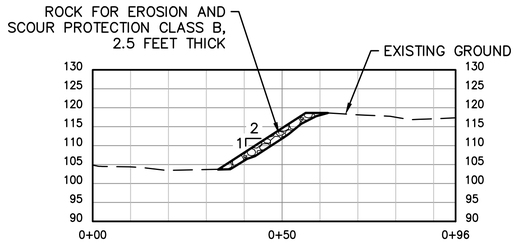

SECTION A
SCALE: 1"=20'
19

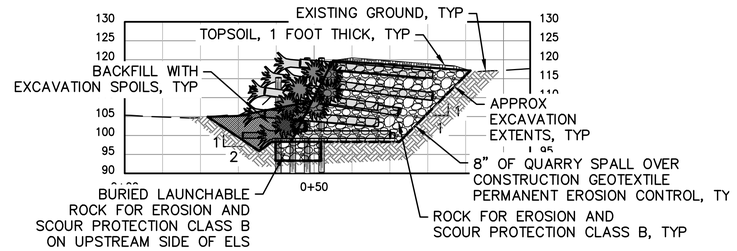

SECTION B
SCALE: 1"=20'
19

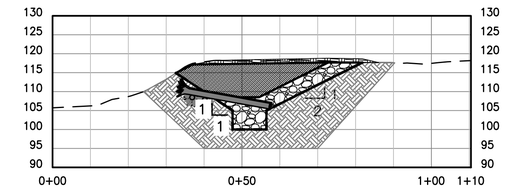

SECTION C
SCALE: 1"=20'
19

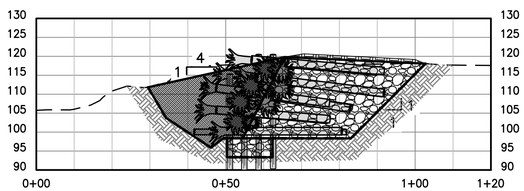

SECTION D
SCALE: 1"=20'
19

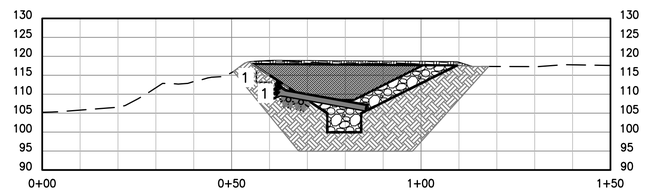

SECTION E
SCALE: 1"=20'
19

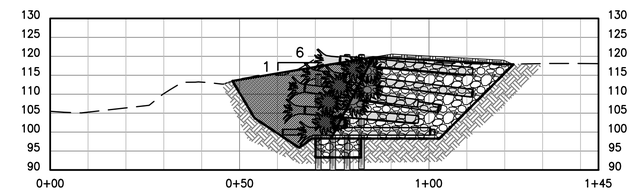

SECTION F
SCALE: 1"=20'
19

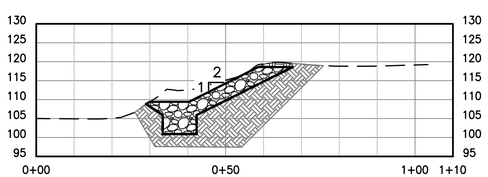

SECTION G
SCALE: 1"=20'
19

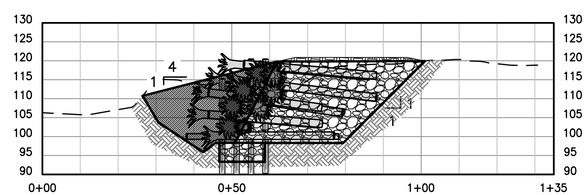

SECTION H
SCALE: 1"=20'
19

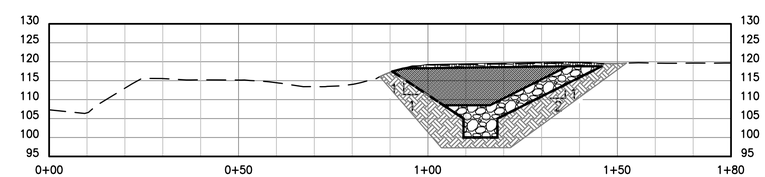

SECTION J
SCALE: 1"=20'
19

NOTES

1.

Know what's below.
Call before you dig.
(UNDERGROUND UTILITY LOCATIONS ARE APPROX.)

FIELD BOOK:
SURVEYED:
SURVEY BASE MAP:
CHECKED:

NUM.	REVISION	BY	DATE

30% SUBMITTAL 2/2022

NUM.	RECORD CHANGES	BY	DATE

APPROVED: M. EWBANK
PROJECT MANAGER: E. MCCLURE
DESIGNED: C. WEST
CAD DESIGN: P. ONSTOTT

PROJECT No.
CONTRACT No.

HERRERA

King County
Department of Natural Resources and Parks
Water and Land Resources Division
River and Floodplain Management Section
Christie True, Director

HERZMAN TO CAMP FREEMAN PROJECT

BUCK'S CURVE REVETMENT REPAIR AND CAMP FREEMAN REVETMENT SECTIONS

SHEET **20** OF **30** SHEETS

XXXX-XX

Filename: KCDNRPxTB.dwt | Layout: Model | Last Edited: 2018/FEB/7
Location: I:\Q-ACAD MASTER\TitleBlock

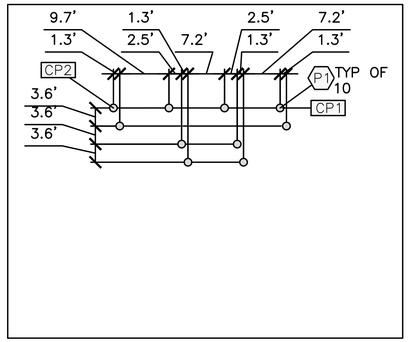

PILES

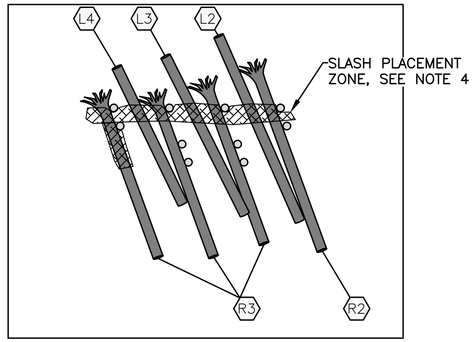

LAYER 1

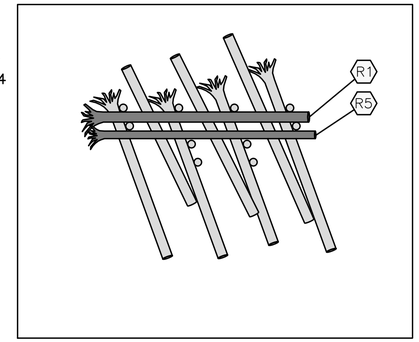

LAYER 2

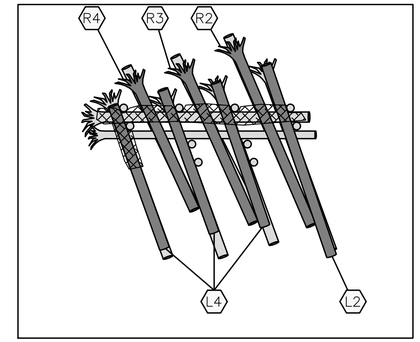

LAYER 3

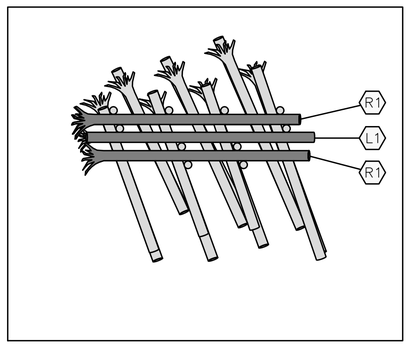

LAYER 4

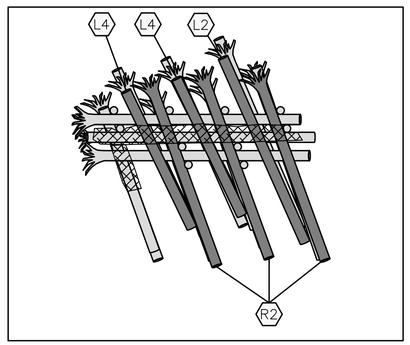

LAYER 5

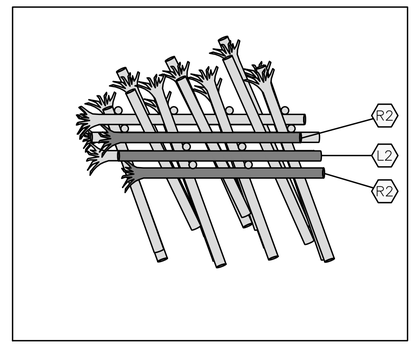

LAYER 6

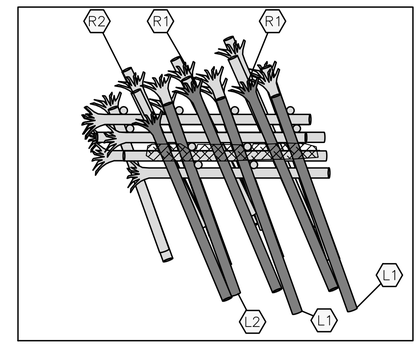

LAYER 7

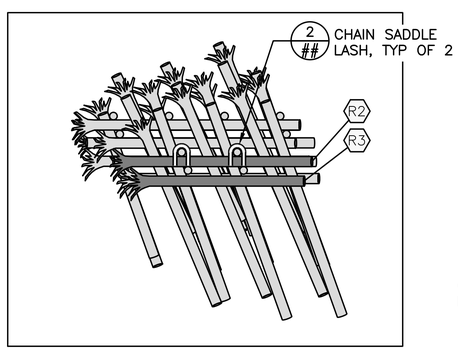

LAYER 8

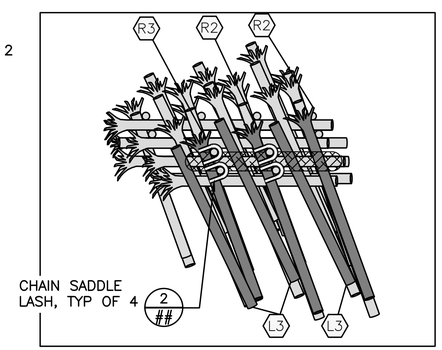

LAYER 9

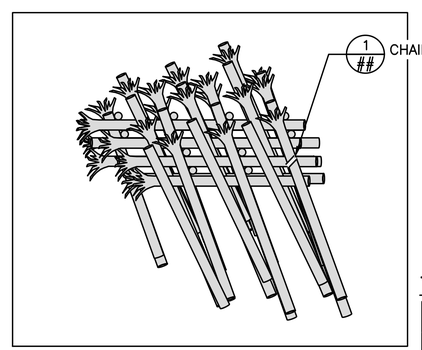

COMPLETE

LEGEND:

- CURRENT LAYER KEY LOG
- PREVIOUS LAYER KEY LOG (AFTER BACKFILLING)
- TIMBER PILE
- SLASH PLACEMENT ZONE
- L1 — KEY LOG TYPE ID (LOG TYPE L1)
- CP1 — STRUCTURE CONTROL POINT (1)

NOTES:

1. GENERAL STRUCTURE LOCATION AND ORIENTATION SHALL BE STAKED BY THE CONTRACTOR. FINAL STRUCTURE LOCATION AND ORIENTATION TO BE FIELD VERIFIED BY THE PROJECT REPRESENTATIVE FOLLOWING CONTRACTOR STAKING.
2. ALL PILE LOCATIONS SHALL BE STAKED BY THE CONTRACTOR AND APPROVED BY THE PROJECT REPRESENTATIVE PRIOR TO PILE INSTALLATION.
3. LOG MATERIALS SHALL BE PLACED AT THE LOCATIONS AND ORIENTATIONS SPECIFIED ON THE DRAWINGS OR AS DIRECTED BY THE PROJECT REPRESENTATIVE. TRIM CUT ENDS OF HORIZONTAL KEY LOGS TO FIT AS REQUIRED.
4. PLACE SLASH OVER AND BETWEEN KEY LOGS AND PILES AS SHOWN FOR EACH LAYER SPECIFIED FOLLOWING PLACEMENT OF KEY LOGS AND RACKING LOGS. PLACE APPROXIMATELY 2' TO 3' OF EXCAVATION SPOILS OVER 1/2 THE WIDTH OF SLASH TO SECURE IN PLACE SUCH THAT SLASH IS VISIBLE FOLLOWING CONSTRUCTION. COORDINATE WITH THE PROJECT REPRESENTATIVE PRIOR TO PLACING RACKING AND SLASH.
5. INDIVIDUAL RACKING LOGS NOT SHOWN FOR CLARITY. RACKING LOGS SHALL BE PLACED IN ZONES AND LAYERS SHOWN IN SLASH PLACEMENT ZONES. PLACE RACKING LOGS ALONG UPSTREAM FACES OF STRUCTURE. APPROXIMATELY 1/2 OF RACKING LOGS SHALL BE PLACED ACROSS PILE ROWS AND 1/2 OF THE LOGS EXTENDING INTO THE CORE OF THE STRUCTURE BETWEEN HORIZONTAL LOGS. RACKING SHALL BE PLACED WITH EACH LAYER OF LOGS, SHALL BE ANGLED UP AND DOWN FROM THE HORIZONTAL, AND SHALL BE PLACED TO CREATE AN INTERLOCKING MATRIX OF LOGS SECURED BETWEEN VERTICAL PILE LOGS AND HORIZONTAL LOGS. COORDINATE WITH PROJECT REPRESENTATIVE PRIOR TO PLACING RACKING LOGS, SLASH AND BACKFILLING.
6. BACKFILL EACH LAYER WITH RIPRAP PRIOR TO CONSTRUCTING SUBSEQUENT LAYER. USE EXCAVATION SPOILS OR SMALLER RIPRAP TO FILL VOIDS BEFORE SUBSEQUENT LAYERS ARE PLACED AND COMPACT BACKFILL WITH EXCAVATOR BUCKET TO ACHIEVE A WELL GRADED AND COMPACTED MASS.

TABLE – ELS CONTROL POINTS:

ELS NO.	CONTROL POINT NO.	NORTHING	EASTING
BD1	CP–1		
	CP–2		
BD2	CP–1		
	CP–2		
BD3	CP–1		
	CP–2		
BD4	CP–1		
	CP–2		

TABLE – ELS LOG SCHEDULE:

LOG TYPE	DIAMETER (IN)	LENGTH (FT)	ROOTWAD	TOTAL/ELS
P1	20 (BUTT), 16 (TIP)	55	NO	10
R1	24	45	YES	5
R2	24	40	YES	11
R3	24	35	YES	6
R4	24	30	YES	1
R5	18	45	YES	1
L1	24	45	NO	3
L2	24	40	NO	5
L3	24	35	NO	4
L4	24	30	NO	6
RACKING	4"–16"	15–30	OPTIONAL	100
SLASH				120 CY

811 Know what's below. Call before you dig.

(UNDERGROUND UTILITY LOCATIONS ARE APPROX.)

FIELD BOOK:
SURVEYED:
SURVEY BASE MAP:
CHECKED:

NUM.	REVISION	BY	DATE

30% SUBMITTAL 2/2022

NUM.	RECORD CHANGES PROVIDED	BY	DATE

APPROVED: M. EWBANK
PROJECT MANAGER: E. MCCLURE
DESIGNED: C. WEST
CAD DESIGN: P. ONSTOTT

PROJECT No.
CONTRACT No.

HERRERA

King County
Department of Natural Resources and Parks
Water and Land Resources Division
River and Floodplain Management Section
Christie True, Director

HERZMAN TO CAMP FREEMAN PROJECT

DEFLECTOR ELS LAYERING PLAN

SHEET **24** OF **30** SHEETS

XXXX-XX

Filename: KCDNRPxTB.dwt | Layout: Model | Last Edited: 2018/FEB/7
Location: I:\0-ACAD MASTER\TitleBlock

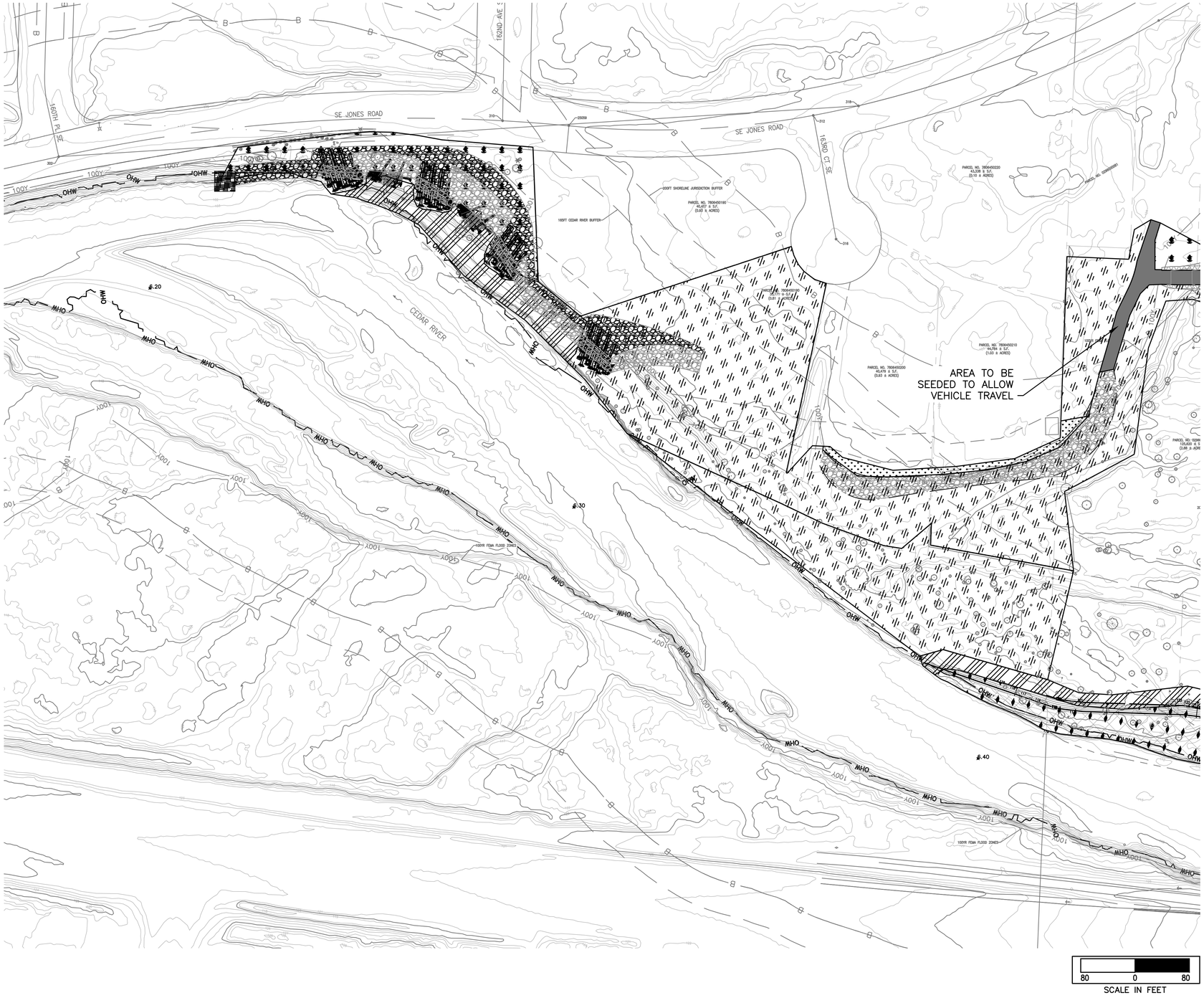

NOTES

1.

LEGEND

- UPLAND FOREST
- FLOODPLAIN FOREST
- LIVE STAKE PLANTING
- LOW DENSITY LIVE STAKE PLANTING
- LOW GROWING NATIVE PERENNIALS
- NATIVE EROSION CONTROL SEED MIX

811

Know what's below.
Call before you dig.
(UNDERGROUND UTILITY LOCATIONS ARE APPROX.)

FIELD BOOK:
SURVEYED:
SURVEY BASE MAP:
CHECKED:

NUM.	REVISION	BY	DATE

30% SUBMITTAL 2/2022

NUM.	RECORD CHANGES PROVIDED	BY	DATE

APPROVED: M. EWBANK
PROJECT MANAGER: E. MCCLURE
DESIGNED: C. WEST
CAD DESIGN: P. ONSTOTT

PROJECT No.
CONTRACT No.

HERRERA

King County
Department of Natural Resources and Parks
Water and Land Resources Division
River and Floodplain Management Section
Christie True, Director

HERZMAN TO CAMP FREEMAN PROJECT

PLANTING PLAN - WEST

SHEET **27** OF **30** SHEETS

XXXX-XX

Filename: KCDNRPXTB.dwt | Layout: Model | Last Edited: 2018/FEB/7
Location: I:\0-ACAD MASTER\TitleBlock

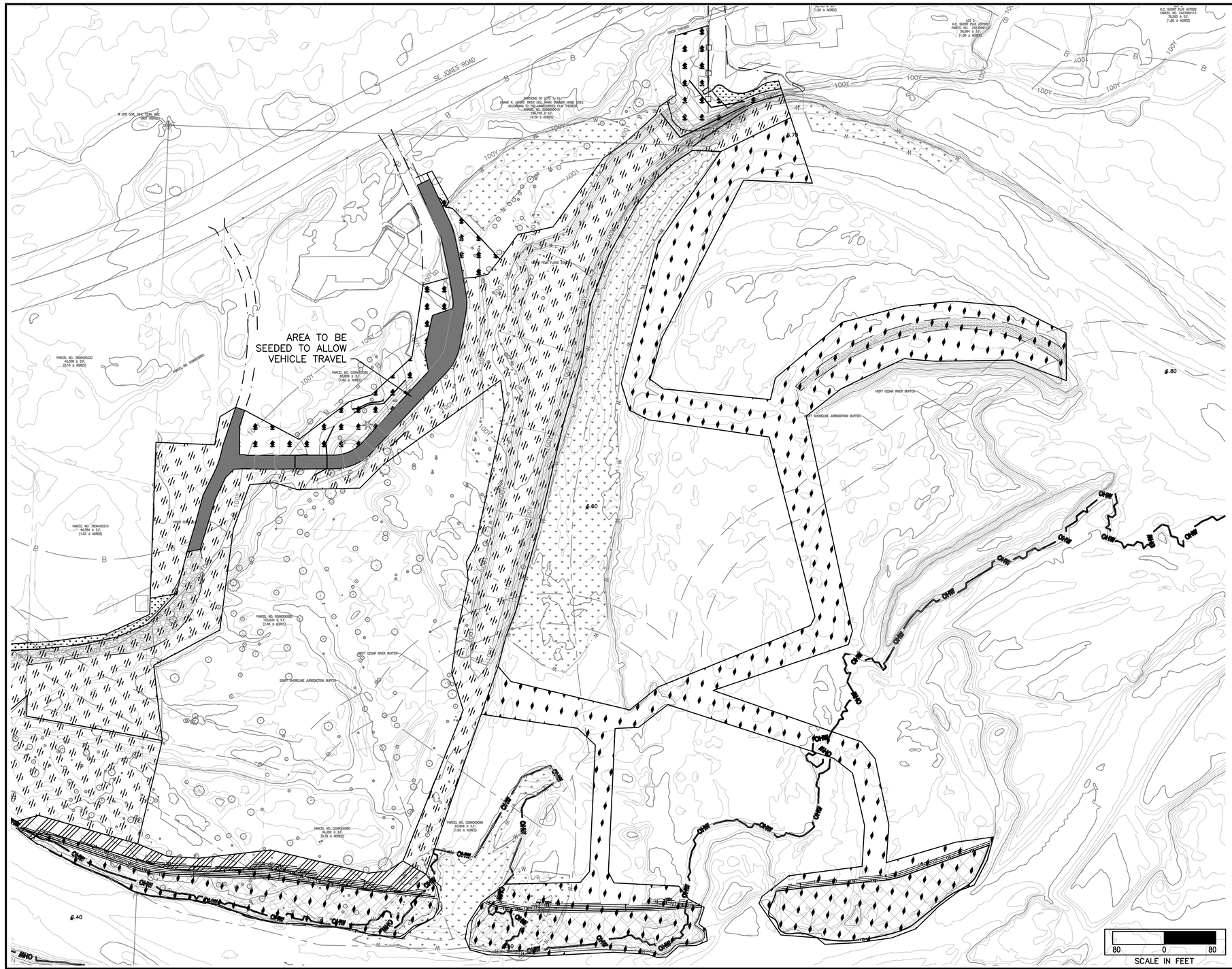

NOTES

1.

LEGEND

- UPLAND FOREST
- FLOODPLAIN FOREST
- LIVE STAKE PLANTING
- LOW DENSITY LIVE STAKE PLANTING
- LOW GROWING NATIVE PERENNIALS
- NATIVE EROSION CONTROL SEED MIX

811

Know what's below.
Call before you dig.
(UNDERGROUND UTILITY LOCATIONS ARE APPROX.)

FIELD BOOK:
SURVEYED:
SURVEY BASE MAP:
CHECKED:

NUM.	REVISION	BY	DATE

30% SUBMITTAL 2/2022

NUM.	RECORD CHANGES PROVIDED	BY	DATE

APPROVED: M. EWBANK
PROJECT MANAGER: E. MCCLURE
DESIGNED: C. WEST
CAD DESIGN: P. ONSTOTT

PROJECT No.
CONTRACT No.

HERRERA

King County
Department of Natural Resources and Parks
Water and Land Resources Division
River and Floodplain Management Section
Christie True, Director

HERZMAN TO CAMP FREEMAN PROJECT

PLANTING PLAN - EAST

SHEET **28** OF **30** SHEETS

XXXX-XX

Filename: KCDNRPxTB.dwt | Layout: Model | Last Edited: 2018/FEB/7
Location: I:\0-ACAD MASTER\TitleBlock

HERZMAN PLANT PALETTE - 30% DESIGN

SPECIES	COMMON NAME	MATURE HEIGHT	SPACING ON CENTER (FEET)	STOCK TYPE	WETLAND INDICATOR STATUS	UPLAND FOREST (36,985 SQ. FT.)	FLOODPLAIN FOREST (160,915 SQ. FT)	LIVE STAKE PLANTING (20,720 SQ. FT)	LOW DENSITY LIVE STAKE PLANTING (126,530 SQ. FT)	NATIVE LOW SHRUBS/ GROUNDCOVER (3,520 SQ. FT)	30% TOTALS
TREES											
ABIES GRANDIS	GRAND FIR	100'	25'	2 GAL	FACU	10	18				28
ACER CIRCINATUM	VINE MAPLE	25'	15'	BRS 36"+	FAC	19	83				102
ACER MACROPHYLLUM	BIGLEAF MAPLE	70'	25'	BRS 36"+	FACU	10	77				87
ALNUS RUBRA	RED ALDER	50'	15'	BRS 36"+	FAC		83				83
ARBUTUS MENZIESII	PACIFIC MADRONE	60'	20'	2 GAL	FACU	2					2
CORNUS NUTTALLII	PACIFIC DOGWOOD	65'	15'	2 GAL	FACU	10	18				28
FRAXINUS LATIFOLIA	OREGON ASH	60'	15'	BRS 36"+	FACW		83				83
POPULUS BALSAMIFERA SSP. TRICHOCARPA	BLACK COTTONWOOD	100'	4'	4' LIVE STAKE	FAC			597			597
	BLACK COTTONWOOD	100'	10'	4' LIVE STAKE	FAC	22	165		835		1022
PRUNUS EMARGINATA	BITTER CHERRY	50'	15'	BRS 36"+	FACU	15	41				56
PSEUDOTSUGA MENZIESII	DOUGLAS FIR	150'	20'	2 GAL	FACU	17	24				41
THUJA PLICATA	WESTERN REDCEDAR	150'	25'	2 GAL	FAC		15				15
TSUGA HETEROPHYLLA	WESTERN HEMLOCK	100'	25'	2 GAL	FACU	10	21				31
SHRUBS											
AMELANCHIER ALNIFOLIA	SASKATOON SERVICEBERRY	20'	10'	BRS 36"+	FACU	7	47			3	57
CORNUS SERICEA SSP. STOLONIFERA	REDOSIER DOGWOOD	10'	6'	4' LIVE STAKE	FACW		290				290
CRATAEGUS DOUGLASII	BLACK HAWTHORN	20'	10'	BRS 36"+	FAC		78				78
HOLODISCUS DISCOLOR	OCEANSPRAY	15'	8'	BRS 36"+	FACU	28	116				145
LONICERA INVOLUCRATA	TWINBERRY HONEYSUCKLE	6'	4'	BRS 36"+	FAC	50	207			17	274
MAHONIA NERVOSA	DULL OREGON GRAPE	4'	4'	4" PLUG	FACU	224	93			58	376
OEMLERIA CERASIFORMIS	OSOBERRY	15'	6'	BRS 36"+	FACU	100					100
PHYSOCARPUS CAPITATUS	PACIFIC NINEBARK	10'	8'	BRS 36"+	FACW		155				155
ROSA NUTKANA	NOOTKA ROSE	6'	4'	BRS 36"+	FACW	224	186			58	469
RUBUS PARVIFLORUS	THIMBLEBERRY	5'	4'	BRS 36"+	FAC	224	186			39	450
RUBUS SPECTABILIS	SALMONBERRY	6'	6'	BRS 36"+	FAC		331				331
SALIX LUCIDA SSP. LASIANDRA	PACIFIC WILLOW	20'	4'	4' LIVE STAKE	FACW			224			224
		20'	10'	4' LIVE STAKE	FACW		155		228		383
SALIX SCOULERIANA	SCOULERS' WILLOW	20'	4'	4' LIVE STAKE	FAC			224			224
		20'	10'	4' LIVE STAKE	FAC		155		228		383
SALIX SITCHENSIS	SITKA WILLOW	20'	4'	4' LIVE STAKE	FACW			224			224
		20'	10'	4' LIVE STAKE	FACW		155		228		383
SYMPHORICARPOS ALBUS	COMMON SNOWBERRY	5'	4'	BRS 36"+	FACU	224	373			39	636
VACCINIUM OVATUM	EVERGREEN HUCKLEBERRY	5'	4'	1 GAL	FACU	224	186			39	450
VACCINIUM PARVIFOLIUM	RED HUCKLEBERRY	5'	4'	1 GAL	FACU	112	186			16	314
GROUNDCOVER											
AQUILEGIA FORMOSA	WESTERN COLUMBINE	24"	24"	BRS	FAC	135	188			31	354
ATHYRIUM FILIX-FEMINA	LADY FERN	24"	24"	1 GAL	FAC		336			14	351
CAREX DENSA	DENSE SEDGE	24"	24"	9" DRP	OBL		375				375
CAREX OBNUPTA	SLOUGH SEDGE	4'	36"	9" DRP	OBL		168				168
CAREX STIPATA	AWL-FRUIT SEDGE	36"	24"	9" DRP	OBL		375				375
DELPHINIUM NUTTALLIANUM	TWOLOBE LARKSPUR	20"	12"	BRS	FAC		188			31	219
ELEOCHARIS PALUSTRIS	COMMON SPIKERUSH	36"	24"	9" DRP	OBL		375				375
JUNCUS ARCTICUS SSP. LITTORALIS	BALTIC RUSH	24"	24"	9" DRP	FACW		375				375
JUNCUS ENSIFOLIUS	SWORDLEAF RUSH	18"	24"	9" DRP	FACW		188				188
JUNCUS PATENS	COMMON RUSH	24"	24"	9" DRP	FACW		375				375
JUNCUS TENUIS	SLENDER RUSH	24"	24"	9" DRP	FAC		375				375
POLYSTICHUM MUNITUM	WESTERN SWORDFERN	4'	4'	1 GAL	FACU	247	186			27	460
SCHOENOPLECTUS ACUTUS	HARDSTEM BULRUSH	5'	36"	9" DRP	OBL			135			135
SCHOENOPLECTUS TABERNAEMONTANI	SOFT-STEM BULRUSH	9'	36"	9" DRP	OBL			135			135
SCIRPUS MICROCARPUS	SMALL-FRUITED BULRUSH	5'	36"	9" DRP	OBL			135			135
SIDALCEA HENDERSONII	HENDERSON'S CHECKERMALLOW	36"	24"	BRS	FACW	181	188			31	400
SOLIDAGO CANADENSIS	CANADA GOLDENROD	4'	24"	BRS	FACU	361				31	393
TELLIMA GRANDIFLORA	BIGFLOWER FRINGECUP	24"	24"	4" PLUG	FACU	181	188			31	400
TOLMIEA MENZIESII	YOUTH-ON-AGE	12"	12"	4" PLUG	FACW	181	188			31	400
										TOTAL PLANTS	**14107**

* DRP = DEEP ROOTED PLUG, BRS= BARE ROOT SEEDLING, GAL= GALLON

**ASSUMES 3% OF THE FLOODPLAIN FOREST PLANTING ZONE IS NATIVE GROUNDCOVER

NATIVE EROSION CONTROL SEED MIX (0.8 ACRES) - 2.6 PLS POUNDS PER ACRE

LATIN NAME	COMMON NAME	WETLAND INDICATOR STATUS	MATURE HEIGHT	% SPECIES COMPOSITION OF MIX
ACHILLEA MILLEFOLIUM	COMMON YARROW	FACU	12"	3
BROMUS CARINATUS	CALIFORNIA BROME	FAC	24"	10
DESCHAMPSIA CESPITOSA	TUFTED HAIRGRASS	FACW	24"	15
ELYMUS GLAUCUS	BLUE WILDRYE	FACU	5'	15
FESTUCA IDAHOENSIS SSP. IDAHOENSIS	IDAHO FESCUE	FAC	40"	15
FESTUCA IDAHOENSIS SSP. ROEMERI	ROEMER'S FESCUE	FAC	40"	15
FESTUCA RUBRA SSP. RUBRA	RED FESCUE	FAC	12"	15
KOELERIA MACRANTHA	PRAIRIE JUNEGRASS	FACU	24"	7
TRITICUM AESTIVUM	STERILE WHEATGRASS (REGREEN)	N/A	12"	5

PLANTING SCHEDULE

NOTES

1.

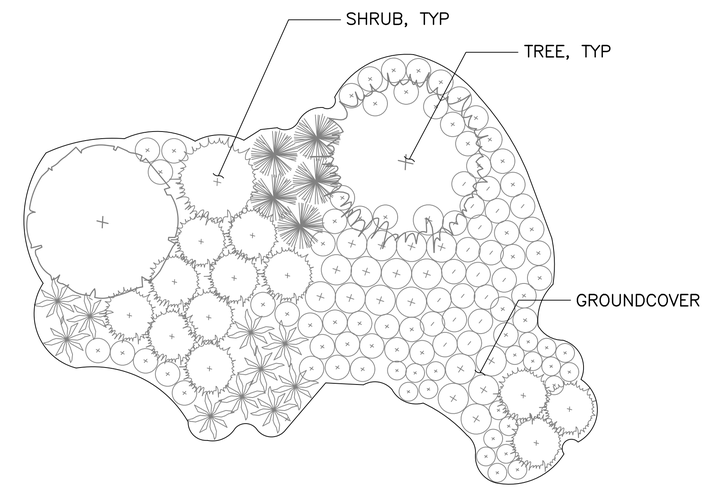

DETAIL – PLANTING LAYOUT DETAIL (TYP) 1

NTS

PLANTING LAYOUT NOTES:

1. PLANT GROUNDCOVERS, SHRUBS, AND TREES AS SHOWN ON PLAN. GROUNDCOVERS AND SHRUBS SHALL BE IN CLUSTERS OF UNEVEN NUMBERS (E.G. THREE, FIVE, SEVEN, ETC.)
2. PLANTS SHALL BE ARRANGED SO THAT AS THEY MATURE, THEY GROW IN TO MASSINGS AND FULLY COVER THE SOIL SURFACE.
3. PROVIDE A 3 FOOT RADIUS MULCH–ONLY AREA AROUND EACH TREE AND A 2 FOOT RADIUS MULCH–ONLY AREA AROUND EACH SHRUB.

811 Know what's below. Call before you dig.

(UNDERGROUND UTILITY LOCATIONS ARE APPROX.)

FIELD BOOK:
SURVEYED:
SURVEY BASE MAP:
CHECKED:

NUM.	REVISION	BY	DATE

30% SUBMITTAL 2/2022

NUM.	RECORD CHANGES PLOTTED	BY	DATE

APPROVED: M. EWBANK
PROJECT MANAGER: E. MCCLURE
DESIGNED: C. WEST
CAD DESIGN: P. ONSTOTT

PROJECT No.
CONTRACT No.

HERRERA

King County
Department of Natural Resources and Parks
Water and Land Resources Division
River and Floodplain Management Section
Christie True, Director

HERZMAN TO CAMP FREEMAN PROJECT

PLANTING SCHEDULE AND NOTES

SHEET **29** OF **30** SHEETS

XXXX-XX

Filename: KCDNRPxTB.dwt | Layout: Model | Last Edited: 2018/FEB/7
Location: I:\0-ACAD MASTER\TitleBlock

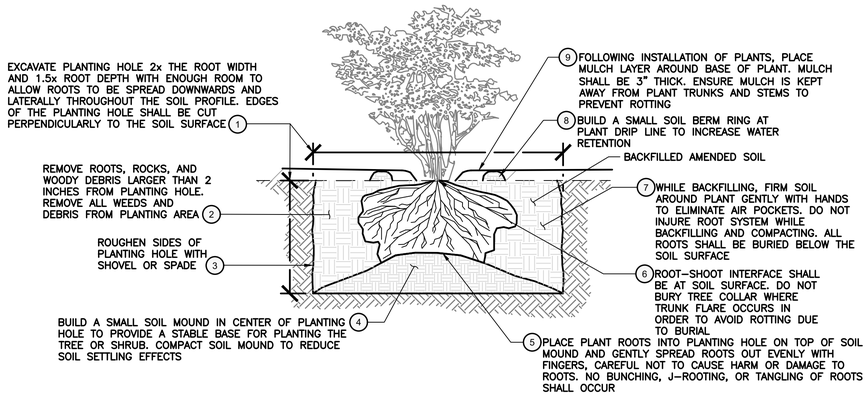

DETAIL – BARE ROOT TREE OR SHRUB PLANTING 1
NTS

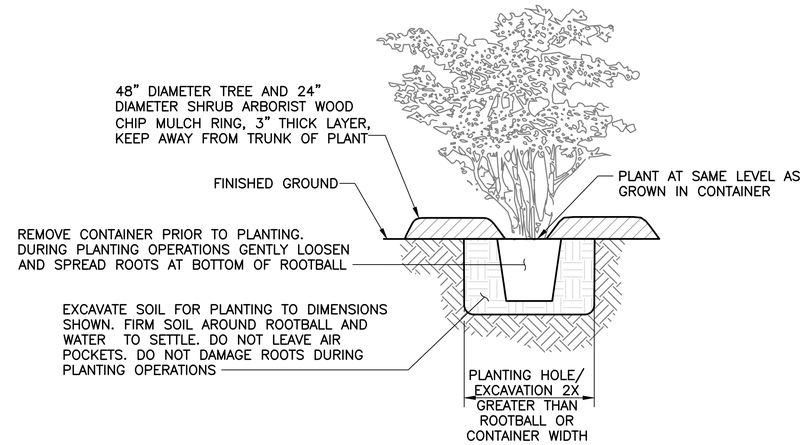

DETAIL – CONTAINER TREE AND SHRUB PLANTING 2
NTS

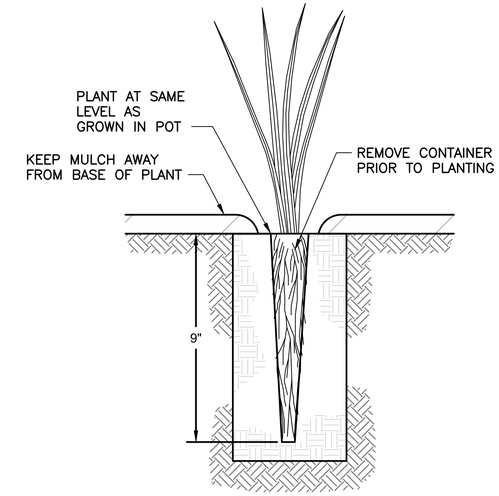

DETAIL – 9" DEEP ROOT PLUG PLANTING 3
NTS

LIVE STAKE PLANTING NOTES:

1. STAKES MUST BE 1/2" TO 1" DIAMETER AT BASE OF STAKE.
2. STAKES WILL HAVE MINIMAL WARPING OR BENDS, BEING MOSTLY STRAIGHT IN FORM, FOR EASE OF PLANTING.

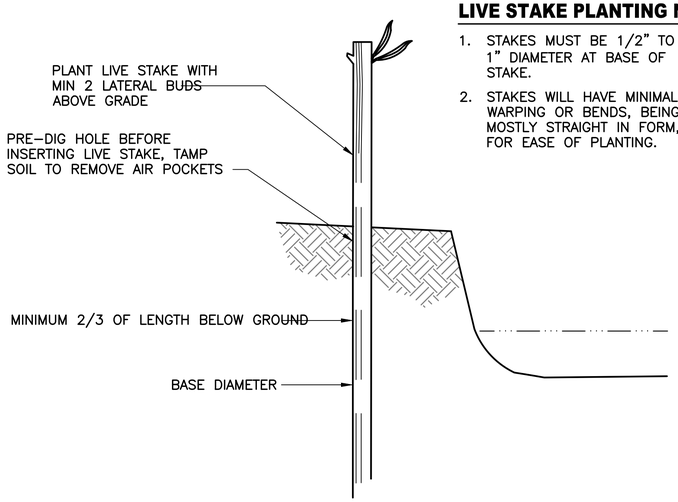

DETAIL – 4' LIVE STAKE PLANTING 4
NTS

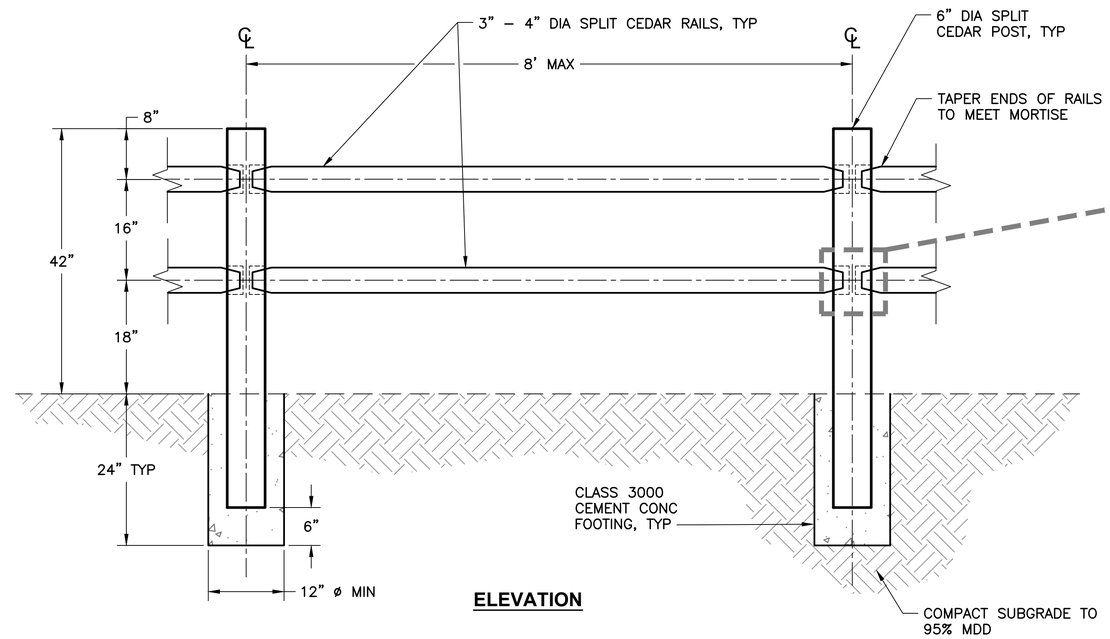

DETAIL – SPLIT RAIL FENCE 5
NTS

Know what's below.
Call before you dig.
(UNDERGROUND UTILITY LOCATIONS ARE APPROX.)

FIELD BOOK:
SURVEYED:
SURVEY BASE MAP:
CHECKED:

NUM.	REVISION	BY	DATE

30% SUBMITTAL 2/2022

NUM.	RECORD CHANGES APPROVED	BY	DATE

APPROVED: M. EWBANK
PROJECT MANAGER: E. MCCLURE
DESIGNED: C. WEST
CAD DESIGN: P. ONSTOTT

PROJECT No.
CONTRACT No.

HERRERA

King County
Department of Natural Resources and Parks
Water and Land Resources Division
River and Floodplain Management Section
Christie True, Director

HERZMAN TO CAMP FREEMAN PROJECT

PLANTING DETAILS

SHEET **30** OF **30** SHEETS

XXXX-XX

Filename: KCDNRPxTB.dwt | Layout: Model | Last Edited: 2018/FEB/7
Location: I:\0-ACAD MASTER\TitleBlock