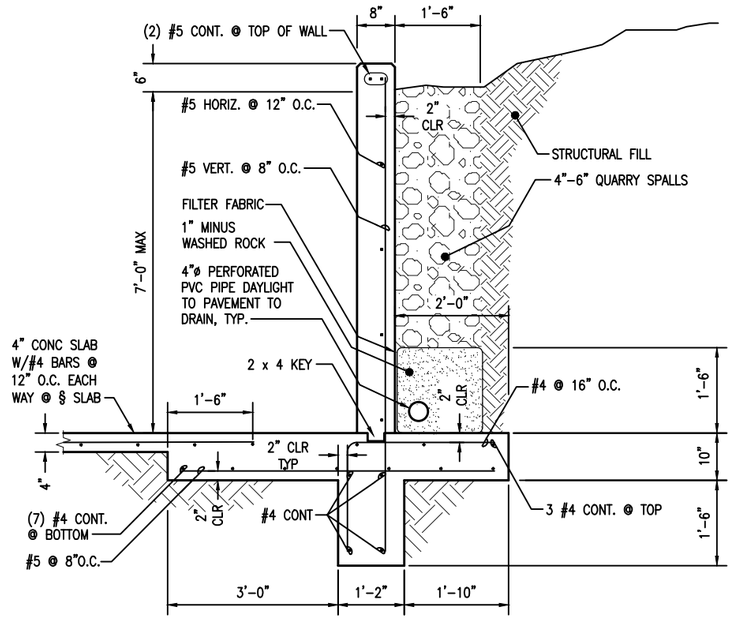

TYPICAL COUNTERFORT WALL TYPE I ELEVATION

DETAIL 1

SCALE: 3/4"=1'-0"

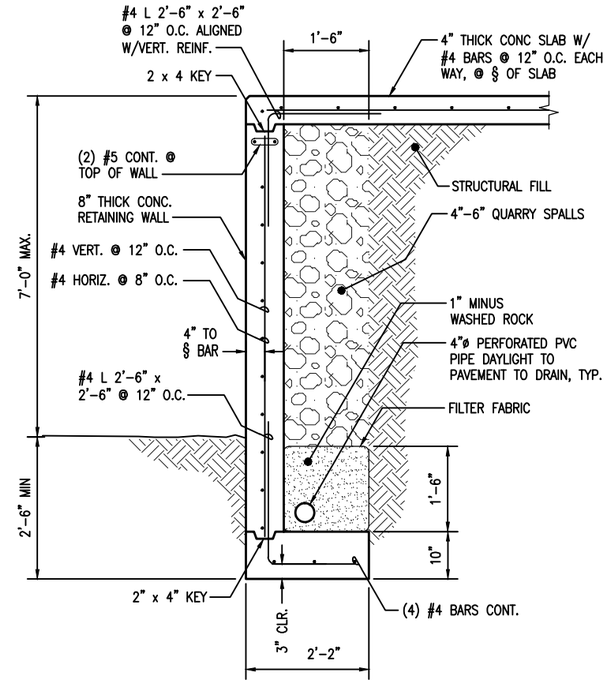

TYPICAL COUNTERFORT WALL II ELEVATION

DETAIL 2

SCALE: 3/4"=1'-0"

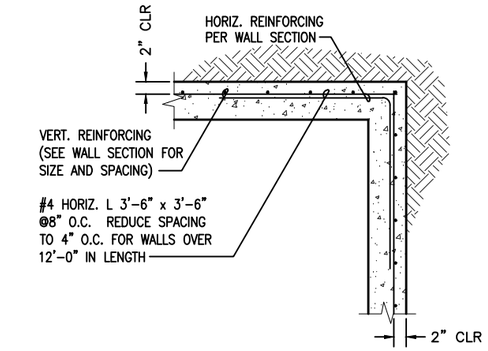

TYPICAL COUNTERFORT WALL CORNER

DETAIL 3

SCALE: 3/4"=1'-0"

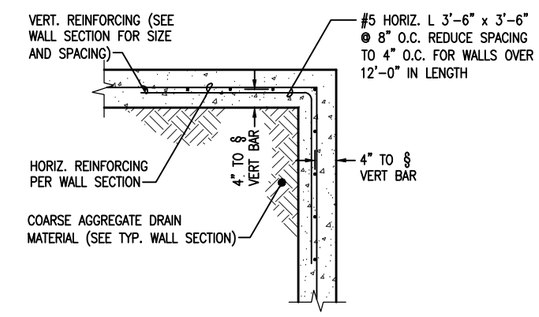

TYPICAL COUNTERFORT WALL CORNER

DETAIL 4

SCALE: 3/4"=1'-0"

Call before you Dig.

1-800-424-5555

UNDERGROUND SERVICE (USA)

No.	REVISION	BY	APP'D	DATE

AKB ENGINEERS, INC.
16205 NE 44th Court
REDMOND, WA 98052
Phone: 425 5038974

NOT FOR CONSTRUCTION

DESIGNED: C. ASQUITH	PROJECT MANAGER: L. KRENZEL	SCALE: AS NOTED
DRAWN:	APPROVED:	SITE LOCATION NO:
CHECKED: P ENG	IBIS NO: / WORK REQUEST:	ONE INCH AT FULL SIZE 1" IF NOT ONE INCH, SCALE ACCORDINGLY
RECOMMENDED: D CRIPPEN	CONTRACT NO: C00952C14	

King County Department of Transportation

METRO TRANSIT DIVISION

PASSENGER FACILITIES

COUNTERFORT WALL DETAILS

DATE: DEC 2014

DRAWING NO: D106

SHEET NO: 12 OF 19

V:\Projects\Passenger Facilities\Standard Details\Construction Set\C00952C14_12-2014\D106.dwg | Layout: D106
PLOTTED: Nov 17, 2014-11:25:13am By: lampaol
XREFS: Passenger Fac Border.dwg
IMAGES: AKB.jpg;