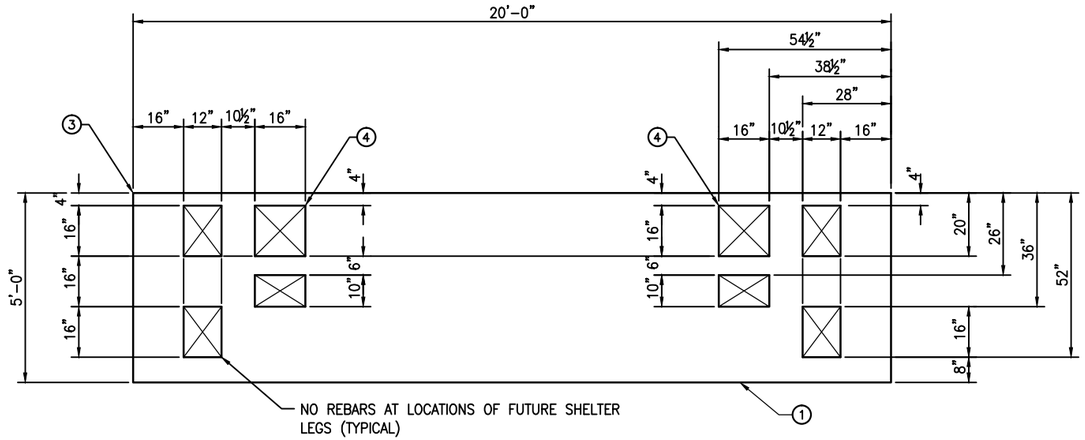

RAPIDRIDE RR-20 SHELTER FOOTING (FOR RR206/RR208/RR208B/F22)
REBAR BLOCKOUTS FOR SHELTER ANCHOR BOLTS

DETAIL 1
SCALE: NONE

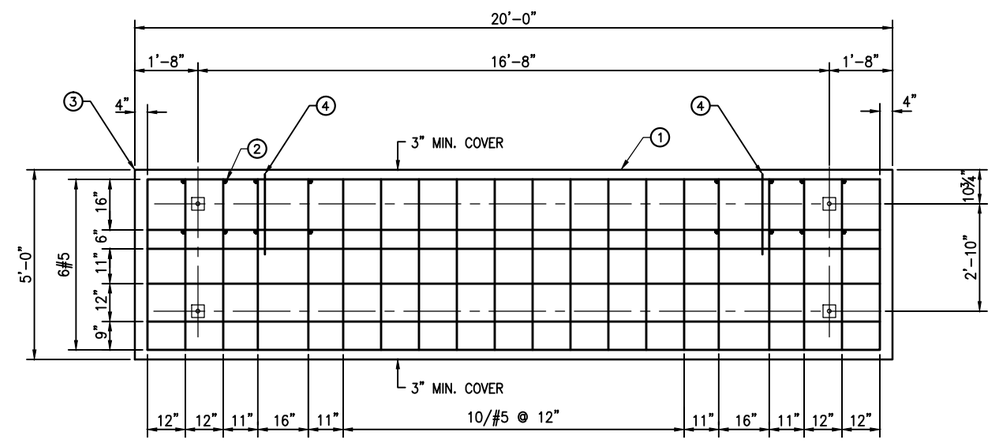

RAPIDRIDE RR-20 SHELTER FOOTING (FOR F-22)

DETAIL 2
SCALE: NONE

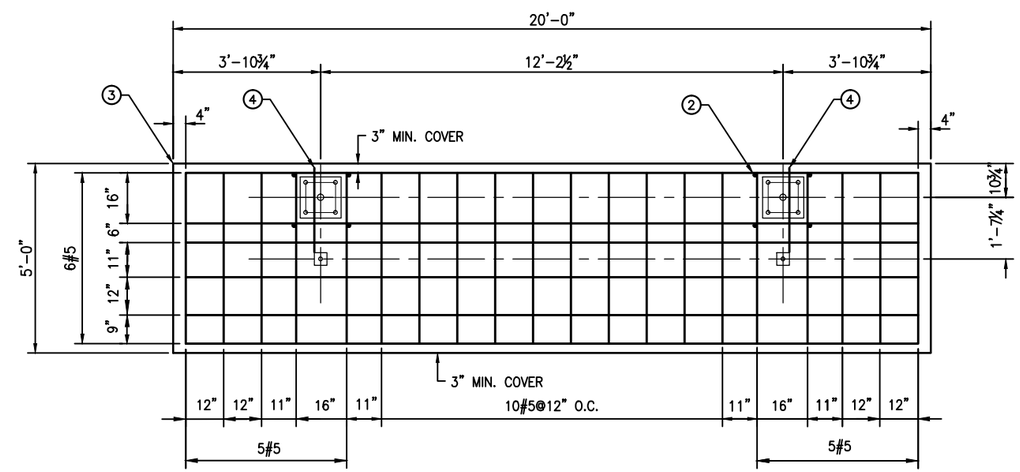

RAPIDRIDE RR-20 SHELTER FOOTING (FOR RR206/RR208/RR208B)

DETAIL 3
SCALE: NONE

CONSTRUCTION NOTES

1. JOINT PER DET 3/D101 TO ISOLATE EDGES FROM PAVEMENT, SIDEWALKS, OR OTHER STRUCTURES.
2. #4 VERTICAL EPOXY-COATED BARS 6" EMBEDMENT INTO SOIL FOR RESTRAINT (TYP).
3. POINT OF REFERENCE, (SEE NOTE 1/D101).
4. 20" LONG #5 REBAR @ 6" OFFSET FROM THE ADJACENT REBAR. BOTH TOP & BOTTOM LAYERS.

Call before you Dig.
1-800-424-5555
UNDERGROUND SERVICE (USA)

No.	REVISION	BY	APP'D	DATE

NOT FOR CONSTRUCTION

DESIGNED: C. ASQUITH	PROJECT MANAGER: L. KRENZEL	SCALE: AS NOTED	King County Department of Transportation
DRAWN:	APPROVED:	SITE LOCATION NO:	
CHECKED: P ENG	IBIS NO: / WORK REQUEST:	ONE INCH AT FULL SIZE 1" IF NOT ONE INCH, SCALE ACCORDINGLY	
RECOMMENDED: D CRIPPEN	CONTRACT NO: C00952C14		

METRO TRANSIT DIVISION
PASSENGER FACILITIES

RAPIDRIDE SHELTER FOOTING
REBAR LAYOUT DETAILS

DATE: DEC 2014
DRAWING NO: D101B
SHEET NO: 6 OF 19

W:\Projects\Passenger Facilities\Standard Details\Construction Set\C00952C14_12-2014\D101B.dwg | Layout: D10B
PLOTTED: Nov 17, 2014-11:24:41am By: lampadi
XREFS: Passenger Fac Border.dwg
IMAGES: