NUMBER	TITLE	SHEETS
SA–001	TROLLEY STANDARDS DRAWING INDEX	5
	SPECIAL PARTS AND DESIGNATIONS	
SA–097	SPECIALWORK MATERIAL LIST	2
SA–098	MASTER MATERIAL LIST USAGE REFERENCE	4
SA–099	MASTER MATERIAL LIST	4
SA–100	SYMBOLS AND ABBREVIATIONS	3
SA–101	STRAIN PLATE	1
SA–102	STEEL POLE COLLAR	1
SA–103	WOOD POLE EYEBOLT ASSEMBLY	1
SA–104	WOOD POLE DOWN GUY ASSEMBLY	1
SA–106	COMPRESSION POLE BRACKET POLE COLLAR	1
SA–107	STAINLESS STEEL EYEBOLT	1
SA–108	BRACKET ARM POLE END CAP	1
SA–109	BRACKET ARM ARM END CAP	1
SA–110	BRACKET ARM SPAN END CAP	1
SA–111	WOOD POLE MOUNTING BRACKET	1
SA–112	3 1/2" TUBE SOCKET PLATE	1
SA–113	3 1/2" TUBE TEE SLIPFIT & SOCKET	1
SA–114	BRACKET ARM POLE END CAP WITH BOTTOM TAB	1
	SPECIAL ASSEMBLIES AND SYSTEM CRITERIA	
SA–151	SPECIALWORK INSULATED JUMPER ASSEMBLY	1
SA–152	TROLLEY WIRE DEADEND ASSEMBLY	2
SA–153	STAGING DEADEND ASSEMBLY	1

DESIGNED A WOLAK	CHKD: D GREER	King County	METRO TRANSIT DIVISION TROLLEY OVERHEAD SYSTEM STANDARDS	DATE: APRIL 2008
DR: B FARISSB	SCALE: NONE			FILE
RECOM.	IBIS NO:		INDEX	DWG. NO. SA–001
APPROVED J DAVIS	CONTRACT NO:			SHT 1 OF 5

NUMBER	TITLE	SHEETS
SA–161	SPECIALWORK DEVICE REFERENCE POINT LOCATIONS	1
SA–163	SPECIALWORK SWITCH CONTACTOR CONFIGURATION	1
SA–164	TROLLEY WIRE SUPPORT SPAN ATTACHMENT CRITERIA	4
SA–165	FROG INDUCTION CONTROL SYSTEM	6
SA–166	ADJUSTMENT POINT	1
SA–167	INSULATION COVERED GUY WIRE REQUIREMENT CRITERIA	1
SA–170	TROLLEY COACH TRAVEL AREA IN CONSTRUCTION ZONE	1
SA–190	TEMPORARY INSULATION BOARD	1
	SUPPORTING STRUCTURES	
SA–201	STANDARD STEEL POLE	4
SA–202	WOOD POLE FRAMING DETAILS	1
SA–211	OFFSET FOUNDATION (ANCHOR BASE POLE)	7
SA–212	STANDARD FOUNDATION (EMBEDDED STEEL POLE)	4
SA–213	STANDARD FOUNDATION (ANCHOR BASE STEEL POLE)	7
SA–214	WOOD POLE SETTING STANDARD	3
SA–215	EMBEDDED STEEL POLE INSTALLATION	3
SA–216	ANCHOR BASE STEEL POLE INSTALLATION	4
SA–221	BUILDING EYEBOLT INSTALLATION	5
SA–231	DOWN GUY	1
SA–232	SIDEWALK GUY	2
SA–233	HEAD GUY	1
SA–234	BRACKET ARM GUY	2

DESIGNED: A WOLAK	CHKD: D GREER	King County	METRO TRANSIT DIVISION TROLLEY OVERHEAD SYSTEM STANDARDS	DATE: APRIL 2008
DR: B FARISSB	SCALE: NONE			FILE
RECOM.	IBIS NO:			DWG. NO. SA–001
APPROVED: J DAVIS	CONTRACT NO:		INDEX	SHT 2 OF 5

NUMBER	TITLE	SHEETS
	TROLLEY WIRE SUPPORT ASSEMBLIES	
SA–300	TANGENT SPAN TWO–WAY TRAFFIC W/ K& M HANGERS	1
SA–301	TANGENT SPAN TWO–WAY TRAFFIC	1
SA–302	HOLDUP TANGENT SPAN TWO–WAY TRAFFIC	1
SA–303	INVERTED TANGENT SPAN TWO–WAY TRAFFIC	1
SA–304	HOLDDOWN TANGENT SPAN TWO–WAY TRAFFIC	1
SA–305	BRIDLE TANGENT SPAN TWO–WAY TRAFFIC	2
SA–306	DOUBLE BRIDLE TANGENT SPAN TWO–WAY TRAFFIC	2
SA–307	1° TO 5° CURVE SPAN W/ 2' CURVE RAILS TWO–WAY TRAFFIC	2
SA–308	5.5° TO 7.5° CURVE SPAN W/ 4' CURVE RAILS TWO–WAY TRAFFIC	2
SA–309	TANGENT SPAN THREE TRACKS	1
SA–310	8° TO 30° CURVE SPAN W/ CURVE SEGMENTS TWO–WAY TRAFFIC	2
SA–311	TANGENT SPAN ONE–WAY TRAFFIC	1
SA–312	HOLDUP TANGENT SPAN ONE–WAY TRAFFIC	1
SA–313	INVERTED TANGENT SPAN ONE–WAY TRAFFIC	1
SA–314	HOLDDOWN TANGENT SPAN ONE–WAY TRAFFIC	1
SA–315	BRIDLE TANGENT SPAN ONE–WAY TRAFFIC	2
SA–316	DOUBLE BRIDLE TANGENT SPAN ONE–WAY TRAFFIC	2
SA–317	1° TO 5° CURVE SPAN W/ 2' CURVE RAILS ONE–WAY TRAFFIC	2
SA–318	5.5° TO 7.5° CURVE SPAN W/ 4' CURVE RAILS ONE–WAY TRAFFIC	1
SA–320	8° TO 30° CURVE SPAN W/ CURVE SEGMENT ONE–WAY TRAFFIC	2
SA–321	DOUBLE FEEDER SPAN TWO–WAY TRAFFIC	3

DESIGNED A WOLAK	CHKD: D GREER	King County	METRO TRANSIT DIVISION TROLLEY OVERHEAD SYSTEM STANDARDS	DATE: APRIL 2008
DR: B FARISSB	SCALE: NONE			FILE
RECOM.	IBIS NO:		INDEX	DWG. NO. SA–001
APPROVED J DAVIS	CONTRACT NO:			SHT 3 OF 5

NUMBER	TITLE	SHEETS
SA–322	SINGLE FEEDER SPAN TWO–WAY TRAFFIC	2
SA–325	EQUALIZER SPAN TWO–WAY TRAFFIC	1
SA–331	DOUBLE FEEDER SPAN ONE–WAY TRAFFIC	3
SA–332	SINGLE FEEDER SPAN ONE–WAY TRAFFIC	2
SA–333	SECTIONALIZING SPAN ONE–WAY TRAFFIC	1
SA–334	TROLLEY WIRE SPREADER BAR	1
SA–341	STEEL POLE BRACKET ASSEMBLY TANGENT CONSTRUCTION	2
SA–342	STEEL POLE BRACKET ASSEMBLY CURVE CONSTRUCTION	2
SA–343	STEEL POLE BRACKET ASSEMBLY COMPRESSION TYPE	4
SA–345	STEEL POLE BRACKET ASSEMBLY UNDERSLING CONSTRUCTION	2
SA–348	STEEL POLE HOLDDOWN BRACKET ASSEMBLY	2
SA–349	STEEL POLE TANGENT FEEDER BRACKET ASSEMBLY	3
SA–351	WOOD POLE BRACKET ASSEMBLY TANGENT CONSTRUCTION	2
SA–352	WOOD POLE BRACKET ASSEMBLY CURVE CONSTRUCTION	2
SA–355	WOOD POLE BRACKET ASSEMBLY UNDERSLING CONSTRUCTION	2
SA–358	WOOD POLE HOLDDOWN BRACKET ASSEMBLY TANGENT CONST	2
SA–361	TRAFFIC MAST ARM TROLLEY SUPPORT	1
SA–370	SPAN WIRES LIMITED SPACE TYPICAL VARIANCES	2
SA–371	SWITCH & CURVE SEGMENT PULLOFFS	9
SA–372	CROSSOVER HOLDUP SPAN	2
SA–373	CONVENTIONAL CURVE WITH CURVE RAILS	4

DESIGNED: A WOLAK	CHKD: D GREER	King County	METRO TRANSIT DIVISION TROLLEY OVERHEAD SYSTEM STANDARDS	DATE: APRIL 2008
DR: B FARISSB	SCALE: NONE			FILE
RECOM.	IBIS NO:		INDEX	DWG. NO. SA–001
APPROVED: J DAVIS	CONTRACT NO:			SHT 4 OF 5

NUMBER	TITLE	SHEETS
	SPECIAL DETAILS	
SA–401	LIGHTNING ARRESTERS AT FEEDER RISER POLES	6
SA–402	FEEDER RISER POLE	3
SA–403	STEEL POLE FEEDER RISER WITH STREETLIGHT	1
SA–411	DUCTBANK CONCRETE ENCASED	2
	PURCHASE REQUIREMENTS	
SP–201	STANDARD STEEL POLE PURCHASE REQUIREMENTS	13

DESIGNED A WOLAK	CHKD: D GREER	King County	METRO TRANSIT DIVISION TROLLEY OVERHEAD SYSTEM STANDARDS	DATE: APRIL 2008
DR: B FARISSB	SCALE: NONE			FILE
RECOM.	IBIS NO:		INDEX	DWG. NO. SA–001
APPROVED J DAVIS	CONTRACT NO:			SHT 5 OF 5

SPECIALWORK MATERIAL LIST

ITEM #	DESCRIPTION	WABCO CAT. NO.
1	15° WSE, RH, IC, RS	55964–3001
2	15° WSE, LH, IC, RS	55964–3002
3	15° WSE, RH, IC, RC	55964–3005
4	15° WSE, LH, IC, RC	55964–3006
5	15° WSE, RH, IS, RS	55973–3001
6	15° WSE, LH, IS, RS	55973–3002
7	15° WSE, RH, IS, RC	55973–3003
8	15° WSE, LH, IS, RC	55973–3004
9	15° WTR, RH, IC, RC	55979–3001
10	15° WTR, LH, IC, RC	55979–3002
11	15° WTR, RH, IC, RS	55979–3005
12	15° WTR, LH, IC, RS	55979–3006
13	15° WTR, RH, IS, RC	55981–3001
14	15° WTR, LH, IS, RC	55981–3002
15	15° WTR, RH, IS, RS	55981–3003
16	15° WTR, LH, IS, RS	55981–3004
17	30° WSE, RH, IC, RS	56425–3001
18	30° WSE, LH, IC, RS	56425–3002
19	30° WSE, RH, IC, RC	56425–3003
20	30° WSE, LH, IC, RC	56425–3004
21	30° WSE, RH, IS, RS	57143–3001
22	30° WSE, LH, IS, RS	57143–3002
23	30° WSE, RH, IS, RC	57143–3003
24	30° WSE, LH, IS, RC	57143–3004
25	30° WTR, RH, IS, RC	56596–3005
26	30° WTR, LH, IS, RC	56596–3006
27	30° WTR, RH, IS, RS	56596–3007
28	30° WTR, LH, IS, RS	56596–3008
29	30° WTR, RH, IC, RC	56597–3001
30	30° WTR, LH, IC, RC	56597–3002
31	30° WTR, RH, IC, RS	56597–3005
32	30° WTR, LH, IC, RS	56597–3006
33	17° RXO	17872 A OR B
34	27° RXO	17874 A OR B
35	30° RXO	55968–3003
36	37° RXO	17877 A OR B
37	45° RXO	55967–3003
38	50° RXO	57857–3007
39	60° RXO	55966–3001
40	90° RXO	55965–3001
41	30°– 60° XOCS, RH	57123–3001
42	30°– 60° XOCS, LH	57123–3002
43	30°– 45° XOCS, LH	55969–3001

DESIGNED: A WOLAK	CHKD: D GREER	King County	METRO TRANSIT DIVISION TROLLEY OVERHEAD SYSTEM STANDARDS	DATE: APRIL 2008
DR: B FARISSB	SCALE: NONE			FILE
RECOM.	IBIS NO:		SPECIAL WORK MATERIAL LIST	DWG. NO. SA–097
APPROVED: J DAVIS	CONTRACT NO:			SHT 1 OF 2

SPECIALWORK MATERIAL LIST		
ITEM #	DESCRIPTION	WABCO CAT. NO.
44	58° TO 65° AXO	18438
45	66° TO 90° AXO	18437
46	15° Y, IND, ILH, RST RH	59503–3004
47	23° WSE, RH, IC, RS	55961–3001
48	23° WSE, LH, IC, RS	55961–3002
49	23° WTR, RH, IC, RS	55978–3001
50	23° WTR, LH, IC, RS	55978–3002
51	45° WSE, RH, IC, RS	56593–3001
52	45° WSE, LH, IC, RS	56593–3002
53	45° WSE, RH, IC, RC	56593–3005
54	45° WSE, LH, IC, RC	56593–3006
55	45° WSE, RH, IS, RS	57904–3001
56	45° WSE, LH, IS, RS	57904–3002
57	45° WSE, RH, IS, RC	57904–3005
58	45° WSE, LH, IS, RC	57904–3006
59	45° WTR, RH, IC, RC	56595–3005
60	45° WTR, LH, IC, RC	56595–3006
61	45° WTR, RH, IC, RS	56595–3007
62	45° WTR, LH, IC, RS	56595–3008
63	45° WTR, RH, IS, RC	56592–3005
64	45° WTR, LH, IS, RC	56592–3006
65	45° WTR, RH, IS, RS	56592–3007
66	45° WTR, LH, IS, RS	56592–3008

LEGEND

RH = RIGHT HAND SWITCH
LH = LEFT HAND SWITCH
IC = INSULATION IN CURVE
IS = INSULATION IN STRAIGHT
WSE = ELECTRICALLY OPERATED INDUCTIVE SWITCH
WTR = TRAILING SWITCH
RXO = RIGID CROSSOVER
RC = RESET TO CURVE
RS = RESET TO STRAIGHT
XOCS = CROSSOVER CURVE SEGMENT
Y = Y SWITCH
IND = ELECTRICALLY OPERATED INDUCTIVE SWITCH
ILH = INSULATION IN LH OF Y
RST RH = RESET TO RH OF Y
AXO = ADJUSTABLE CROSSOVER

DESIGNED A WOLAK	CHKD: D GREER	King County	METRO TRANSIT DIVISION TROLLEY OVERHEAD SYSTEM STANDARDS	DATE: APRIL 2008
DR: B FARISSB	SCALE: NONE			FILE
RECOM.	IBIS NO:		SPECIAL WORK MATERIAL LIST	DWG. NO. SA–097
APPROVED J DAVIS	CONTRACT NO:			SHT 2 OF 2

MASTER MATERIAL LIST	
ITEM #	METRO STANDARD SA– WHICH USES THE ITEM
01	153,165,190,300,301,302,303,304,305,306,307,309,311,312,313,314,315, 316,317,321,322,325,331,332,334,345,348,355,358
02	190,301,302,305,306,309,311,312,315,316,355,345
03	152,166,167,233,300,301,302,303,304,305,306,307,308,309,310,311,312, 313,314,315,316,317,318,320,321,322,325,331,332,342,343,345,348,352, 370,371,372,373,355,358
04	152,233,300,301,302,303,304,305,306,307,308,309,310,311,312,313,314, 315,316,317,318,320,321,322,325,331,332,342,343,345,348,352,370,371, 372,373,355,358
05	152,166,233,300,301,302,303,304,305,306,307,308,309,310,311,312,313, 314,315,316,317,318,320,321,322,325,331,332,342,343,345,348,352,370, 371,372,373,355,358
06	152,166,233,300,301,302,303,304,305,306,307,308,309,310,311,312,313, 314,315,316,317,318,320,321,322,325,331,332,342,343,345,348,352,370, 371,372,373,355,358
07	152,233,300,301,302,303,304,305,306,307,308,309,310,311,312,313,314, 315,316,317,318,320,321,322,325,331,332,342,343,345,348,352,370,371, 372,373,355,358
08	152,166,167,233,300,301,302,303,304,305,306,307,308,309,310,311,312, 313,314,315,316,317,318,320,321,322,325,331,332,342,343,345,348,352, 370,371,372,373,355,358
09	152,305,306,310,315,316,331,371,372
10	153,303,304,307,308,313,314,317,318,334,342,345,348,352,370,373,358
11	152,310,342,343,345,348,352,371,372,355,358
12	310,320,322,325,332,342,343,345,352,370,371,373
13	152,166,167,231,232,233,305,306,315,316,371,373
14	152,153,231,232,233,305,306,315,316,371,373
15	166,233,305,306,315,316,341,342,345,348,349,351,352,371,373,355,358
16	152,166,167,231,232,233,305,306,315,316,371,373
17	152,153,233,234,305,306,315,316,341,342,345,348,349,351,352,371,373,355,358
18	167,310,372
19	167
20	343
21	321,322,331,332
22	321,322,325,331,332
23	153,321,331
24	361
25	310,320,342,352
26	321,322,331,332
27	321,322,331,332
28	341,348,349,351,361,358
29	333
30	341,349,351,361

DESIGNED A WOLAK	CHKD: D GREER	King County	METRO TRANSIT DIVISION TROLLEY OVERHEAD SYSTEM STANDARDS	DATE: APRIL 2008
DR: B FARISSB	SCALE: NONE			FILE
RECOM.	IBIS NO:		MASTER MATERIAL LIST USAGE REFERENCE	DWG. NO. SA–098
APPROVED J DAVIS	CONTRACT NO:			SHT 1 OF 4

MASTER MATERIAL LIST

ITEM #	METRO STANDARD SA— WHICH USES THE ITEM
31	341,349,351,361
32	325
33	325
34	152,153
35	163,165
36	361
37	333
38	152
39	152,308,348,358
40	321,331,342,345,352
41	321,322,325,331,332,349
42	349
43	*
44	WFSC ONLY
45	WFSC ONLY
46	WFSC ONLY
47	WFSC ONLY
48	*
49	349
50	349
51	349
52	349
53	307,317,342,352,373
54	308,318,342,352,373
55	234,341,342,345,348,349,351,352,355,358
56	234,341,342,345,348,349,351,352,355,358
57	341,342,345,348,349,351,352,358
58	300,345
59	402
60	321,322,331,332,349,402
61	231,232
62	231
63	232
64	232
65	232,351
66	232
67	401
68	402
69	402
70	321,331,372
71	402
72	165
73	WFSC ONLY

DESIGNED A WOLAK	CHKD: D GREER	King County	METRO TRANSIT DIVISION TROLLEY OVERHEAD SYSTEM STANDARDS	DATE: APRIL 2008
DR: B FARISSB	SCALE: NONE			FILE
RECOM.	IBIS NO:		MASTER MATERIAL LIST USAGE REFERENCE	DWG. NO. SA—098
APPROVED J DAVIS	CONTRACT NO:			SHT 2 OF 4

MASTER MATERIAL LIST	
ITEM #	METRO STANDARD SA– WHICH USES THE ITEM
74	190
75	190
76	325
77	401,411
78	401
79	341,349,351
80	321,331,341,343,349,351,361,401
81	401
82	232
83	401
84	343,361
85	401
86	402
87	361
88	361
89	361
90	234,341,342,345,348,349,351,352,355,358
91	401
92	373
93	401
94	103,351,352,355,358
95	103
96	103,351,352,355,358
97	104,351,352,355,358
98	104
99	103,104,351,352
100	321,331
101	152,321,331
102	152,164,233,234,300,301,302,303,304,305,306,307,308,309,310,311,312, 313,314,315,316,317,318,320,321,322,325,331,332,341,342,343,345,348, 349,371,372,373,355,358
103	152,164,233,234,300,301,302,303,304,305,306,307,308,309,310,311,312, 313,314,315,316,317,318,320,321,322,325,331,332,371,372,373
104	231,232
105	*
106	343
107	SEE PLANS FOR FREQUENCY OF USE (USED WITH SA–221)
108	341,349,351,352,348,355,345,342,358
109	341,349,351
110	342,345,348,352,355,358
111	351,352,355,358
112	ATL BASE TRACK SPREADER
113	ATL BASE TRACK SPREADER

DESIGNED A WOLAK	CHKD: D GREER	King County	METRO TRANSIT DIVISION TROLLEY OVERHEAD SYSTEM STANDARDS	DATE: APRIL 2008
DR: B FARISSB	SCALE: NONE			FILE
RECOM.	IBIS NO:		MASTER MATERIAL LIST USAGE REFERENCE	DWG. NO. SA–098
APPROVED J DAVIS	CONTRACT NO:			SHT 3 OF 4

MASTER MATERIAL LIST	
ITEM #	METRO STANDARD SA– WHICH USES THE ITEM
114	
115	401
116	349,401
117	401
118	401
119	401
120	401
121	401
122	WFSC ONLY
123	WFSC ONLY
124	WFSC ONLY

DESIGNED A WOLAK	CHKD: D GREER	King County	METRO TRANSIT DIVISION TROLLEY OVERHEAD SYSTEM STANDARDS	DATE: APRIL 2008
DR: B FARISSB	SCALE: NONE			FILE
RECOM.	IBIS NO:		MASTER MATERIAL LIST USAGE REFERENCE	DWG. NO. SA–098
APPROVED J DAVIS	CONTRACT NO:			SHT 4 OF 4

MASTER MATERIAL LIST

ITEM #	QTY	DESCRIPTION	MANUFACTURER	CAT. NO.
01		DETROIT CLAMP ASSY	WABCO	19293–3007
02		AGC TANGENT SPAN HANGER	WABCO	19360–2000
03		GUY STRAIN INSUL	PORCELAIN PRODUCTS CO.	504
04		GUY GRIP DEADEND	PREFORMED	CDE–3106
05		WIRE ROPE CLIP, 5/16"	CROSBY	G450
06		FRICTION TAPE, 3/4" (6 WRAPS)		
07		THIMBLE, 3/8" XHD, OPEN	CROSBY	G414
08		GUY STRAND	COPPERWELD	8M
09		BULL RING	WABCO	18567–2000
10		HI–LITE DOUBLE CURVE HANGER	WABCO	54962–3001
11		7/8 TRANSLITE STRAIN INSUL CL–CL	WABCO	54975–6120
12		7/8 TRANSLITE STRAIN INSUL CL–EYE	WABCO	55339–6120
13		GUY STRAIN INSUL	PORCELAIN PRODUCTS CO.	506
14		GUY GRIP DEADEND	PREFORMED	CDE–3115
15		WIRE ROPE CLIP, 3/8"	CROSBY	G450
16		GUY STRAND	COPPERWELD	16M
17		THIMBLE, 1/2" XHD, OPEN	CROSBY	G414
18		GUY STRAND, COVERED	COPPERWELD	8MI
19		GUY STRAND, COVERED	COPPERWELD	16MI
20		EYEBOLT	WABCO	11933–2000
21		7/8 TRANSLITE STRAIN INSUL CL–CL	WABCO	54975–6360
22		CLAMP STRAIN EYE	WABCO	10571–2000
23		7/8 TRANSLITE STRAIN INSUL CL–CL	WABCO	54975–6260
24		TROLLEY WIRE SUPPORT ASSY	WABCO	54962–3003
25		CURVE SEGMENT 8–12 DEG TYPE C CURVE SEGMENT 13–27 DEG TYPE C CURVE SEGMENT 28–47 DEG TYPE C	WABCO WABCO WABCO	22301–3014 22302–3005 22303–3005
26		TYPE PH–4 POS FEED SPAN HANGER	WABCO	54937–3002
27		TYPE PH–5 NEG FEED SPAN HANGER	WABCO	54936–3002
28		INSULATOR SPOOL	WABCO	16835–2000
29		TYPE TCL CLEVIS TIP 4/0	WABCO	54950–3002
30		TROLLEY SUPPORT–LARGE PIPE ARMS	WABCO	54940–4001
31		SPRING DETROIT CLAMP	WABCO	54959–3001
32		TYPE PH–5 NEG FEED SPAN HANGER	WABCO	54936–3001
33		TYPE PH–4 POS FEED SPAN HANGER	WABCO	54937–3001
34		TYPE T DOUBLE EAR STRAIN CLAMP	WABCO	17700–2000
35		CLAMP–INSUL LEAD WIRE	WABCO	19655–2000
36		7/8 TRANSLITE STRAIN INSUL W/ ADJUST END FITTINGS	WABCO	54980–6385
37		NO–BO SECTION INSUL	WABCO	55025–3001
38		7/8 TRANSLITE STRAIN INSUL CL–CL	WABCO	54975–6200

DESIGNED: A WOLAK	CHKD: D GREER	King County	METRO TRANSIT DIVISION TROLLEY OVERHEAD SYSTEM STANDARDS	DATE: APRIL 2008
DR: B FARISSB	SCALE: NONE			FILE
RECOM.	IBIS NO:		MASTER MATERIAL LIST	DWG. NO. SA–099
APPROVED: J DAVIS	CONTRACT NO:			SHT 1 OF 4

MASTER MATERIAL LIST

ITEM #	QTY	DESCRIPTION	MANUFACTURER	CAT. NO.
39		5/8" SHACKLE	WABCO	13722–2000
40		7/8 TRANSLITE STRAIN INSUL CL–90	WABCO	54995–6120
41		H.S.P. FEEDER CLAMP ASSY, BRONZE	WABCO	19879–2000
42		FEEDER CLAMP, BRONZE	WABCO	19790–4004
43				
44		RUNNER, 6 FT TYPE C, 8 TO 12 DEG	WABCO	21375–2000
45		PLATE–STRAIN 5 TO 12 DEG	WABCO	20290–2000
46		SINGLE CURVE HANGER, TYPE A–2	WABCO	14072–2000
47		DOUBLE CURVE HANGER, TYPE A–2	WABCO	14073–2000
48				
49		COMPRESSION CONNECTOR COPPER, LONG BARREL, TIN PLATED, FLARED	ANDERSON/ SQUARE D	VHCL–2/0–12BNF
50		COMPRESSION CONNECTOR COPPER, LONG BARREL, TIN PLATED, FLARED	ANDERSON/ SQUARE D	VHCL–500–12BNF
51		MULTI–LOK TIES (18") NYLON COATED	BAND–IT	AE714
52		TUF NEOPRENE AIR HOSE SLEEVE 1.5" ID x 2.0625" OD (BLACK)	McMASTER–CARR	3 BRAID
53		CURVE RAIL (1° TO 5°, 2' LG)	K & M	851 B412/0
54		CURVE RAIL (5.5° TO 7.5°, 4' LG)	K & M	851 B412/1
55		PHILLYSTRAN (3/8")	PHILLYSTRAN INC	HPTG 6700I
56		PHILLYSTRAN BIG GRIP	PHILLYSTRAN INC	PLP 2755
57		FIBERGLASS REINFORCED PLASTIC (FRP) TUBE 5" DIA x 1/4"	STRONGWELL	EXTREN SERIES 525
58		TANGENT SPAN HANGER	K & M	C–1728–01
59		CONDUIT CLAMP WITH 2" MTG SCREW		
60		FEED SPAN CABLE, 500 KNM CU UNSHIELDED, 5KV EPR WITH PVC JACKET		
61		GUY GUARD, 8 FT FOR USE ON 3/16" TO 1/2" STRAND	PREFORMED	PG 5518
62		POWER INSTALLED SCREW ANCHOR	CHANCE	E102–1219
63		POWER INSTALLED SCREW ANCHOR	CHANCE	C102–1260
64		POLE PLATE, 2 1/2" PIPE	JOSLYN	J0521
65		LAG SCREW, FETTER DRIVE, 1/2" x 4"	JOSLYN	J8754
66		END FITTING, 2 1/2" PIPE	COOPER POWER SYSTEM	DG5G1
67		CLOVERLEAF EPOXIROD STANDOFF	CHANCE	C653–1038
68		UNIVERSAL SERVICE CONNECTOR	BURNDY	KVSU34
69		SEALING BUSHING, TYPE KR WITH TYPE M CABLE SUPPORT, 2 1/2" CONDUIT	O–Z–GEDNEY	KR250 & RPLG–2001–1
70		EYEBOLT, 5/8" x 6" WITH 2 NUTS & LOCKWASHER		

DESIGNED A WOLAK	CHKD: D GREER	King County	METRO TRANSIT DIVISION TROLLEY OVERHEAD SYSTEM STANDARDS	DATE: APRIL 2008
DR: B FARISSB	SCALE: NONE			FILE
RECOM.	IBIS NO:		MASTER MATERIAL LIST	DWG. NO. SA–099
APPROVED J DAVIS	CONTRACT NO:			SHT 2 OF 4

MASTER MATERIAL LIST

ITEM #	QTY	DESCRIPTION	MANUFACTURER	CAT. NO.
71		WATERTIGHT STR STRAIN RELIEF CONN, 1 1/2" CONDUIT	O-Z-GEDNEY	SR 15012 H.D. GALV
72		INDUCTIVE CONTROL SYSTEM RECEIVER INDUCTIVE CONTROL SYSTEM ANTENNA	UNITRAC UNITRAC	320100-16X 320310-4X
73		ANCHOR SHACKLE	JOSLYN	J2742
74		4' x 8' x 1/2" EXTERIOR PLYWOOD		
75		U-BOLT TO FIT 4/0 TROLLEY WIRE		
76		4/0 STRANDED INSUL CABLE		
77		ELECT WARNING TAPE, 6" YELLOW	BRADY	UT 20-Y6
78		CONNECTOR, PARALLEL CLAMP	BURNDY	QPX342C
79		5/8"-11 UNC x 3/8" STUD		
80		3/4" x 0.03" SS BANDING TYPE 201	BAND-IT	C206
81		CONNECTOR, SERVICE, SPLIT BOLT	BURNDY	KS20
82		2 1/2" DIA ASTM A53 GRB STD WT GALV STEEL PIPE		
83		MOLDING, PLASTIC, GROUND WIRE, 1/2" X 1/16" X 8'	JOSLYN	PM128
84		SCHED 40 PVC, GREY, SPLIT		
85		1000 VOLT DC ARRESTER, 907 MCOV	IMPULSE	P/N 1057
86		GALV RIGID STEEL CONDUIT		
87		5/8"-11 UNC x 6" THREADED ROD, GALV ASTM A36	5/8"-11 UNC x 6" THREADED R GALV ASTM A36	
88		5/8"-11 UNC HVY HEX JAM NUT GALV ASTM A563 GRA		
89		11/16" LOCKWASHER		
90		HEAVY PIPE CLAMP, GALV	GRINNELL	FIG 216
91		STAPLES, ROLLED POINT, GALV, 2" x 1/2" x 0.162"	JOSLYN	J156
92		ANGLE CLAMP, DUCTILE IRON	ANDERSON/ SQUARE D	82860-2000
93		STAPLES, ROLLED POINT, GALV, 1 3/4" x 1/4" x 0.148"	JOSLYN	J1673
94		5/8" OVAL EYEBOLT WITH NUT	JOSLYN	J94XX
95		3/4" OVAL EYEBOLT WITH NUT	JOSLYN	J95XX
96		SQ CURVED WASHER 3" x 3" x 1/4", 11/16" DIA	JOSLYN	J113
97		3/4" MACHINE BOLT	JOSLYN	J89XX
98		GUY HOOK, 3/4"	STANLEY FLAGG	P133AX
99		SQ CURVED WASHER 3" x 3" x 1/4", 13/16" DIA	JOSLYN	J6823
100		EPPOXIROD DEADEND ARM	CHANCE	COEH36DP
101		STRAIN PLATE	METRO STD	SA-101

DESIGNED A WOLAK	CHKD: D GREER	King County	METRO TRANSIT DIVISION TROLLEY OVERHEAD SYSTEM STANDARDS	DATE: APRIL 2008
DR: B FARISSB	SCALE: NONE			FILE
RECOM.	IBIS NO:		MASTER MATERIAL LIST	DWG. NO. SA-099
APPROVED J DAVIS	CONTRACT NO:			SHT 3 OF 4

MASTER MATERIAL LIST

ITEM #	QTY	DESCRIPTION	MANUFACTURER	CAT. NO.
102		FORGED THREE–PIECE ADJUSTABLE POLE BAND, ANNEALED & GALVANIZED	KORTICK MFG CO	ITEM 1, 2, 3 4, 5, 8, 9
103		WOOD POLE EYEBOLT	METRO STD	SA–103
104		WOOD POLE DOWN GUY ASSEMBLY	METRO STD	SA–104
105				
106		COMPRESSION POLE BRACKET COLLAR	METRO STD	SA–106
107		STAINLESS STEEL EYEBOLT	METRO STD	SA–107
108		MAST ARM POLE END CAP	METRO STD	SA–108
109		MAST ARM ARM END CAP	METRO STD	SA–109
110		MAST ARM UNDERSLING END CAP	METRO STD	SA–110
111		WOOD POLE MOUNTING BRACKET	METRO STD	SA–111
112		3 1/2" TUBE SOCKET PLATE	METRO STD	SA–112
113		3 1/2" TUBE TEE SLIPFIT & SOCKET	METRO STD	SA–113
114		MAST ARM POLE END CAP WITH BOT TAB	METRO STD	SA–114
115		STAINLESS STEEL BOLT WITH WASHERS & LOCK WASHERS		
116		WIRE, 2 OR 5KV, #4 AWG CU, JACKETED, UNSHIELDED		
117		WIRE, #6 AWG CU, SOLID, SOFT, 0.031" POLYETHYLENE INSULATED		
118		GROUND ROD CLAMP	COPPERWELD	ABH58
119		CONDUCTIVE & ANTI–SEIZE COMPOUND (KOPR–SHIELD)	THOMAS & BETTS	CP–8 OR CP–16
120		GROUND ROD, 5/8" x 10'	COPPERWELD OR JOSLYN	GR5810 J8340
121		LAG SCREW, FETTER DRIVE, 5/8" x 5"	JOSLYN	J8765
122		7/8 TRANSLITE STRAIN INSUL CL–TB	WABCO	54982–3001
123		FEEDER, TYPE E, DEAD END	WABCO	21590–2000
124		CLAMP ASSEMBLY	WABCO	54936–3006

DESIGNED A WOLAK	CHKD: D GREER	King County	METRO TRANSIT DIVISION TROLLEY OVERHEAD SYSTEM STANDARDS	DATE: APRIL 2008
DR: B FARISSB	SCALE: NONE			FILE
RECOM.	IBIS NO:		MASTER MATERIAL LIST	DWG. NO. SA–099
APPROVED J DAVIS	CONTRACT NO:			SHT 4 OF 4

STANDARD #	SYMBOLS	DESCRIPTION
		EXISTING WOOD POLE
SA–202 & SA–214		INSTALL WOOD POLE
		REMOVE WOOD POLE
		EXISTING DIRECT EMBEDMENT STEEL POLE
SA–201,SA–212 & SA–215		INSTALL DIRECT EMBEDMENT STEEL POLE
		REMOVE DIRECT EMBEDMENT STEEL POLE
		EXISTING ANCHOR BASE STEEL POLE
SA–201,SA–213 & SA–216		INSTALL ANCHOR BASE STEEL POLE
		REMOVE ANCHOR BASE STEEL POLE
		EXISTING BUILDING EYEBOLT
SA–107 & SA–221		INSTALL NEW BUILDING EYEBOLT
		EXISTING DOWN GUY ON POLE
SA–231		INSTALL DOWN GUY ON POLE
		EXISTING SIDEWALK GUY ON POLE
SA–232	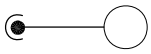	INSTALL SIDEWALK GUY ON POLE
	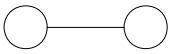	EXISTING HEAD GUY, POLE TO POLE
SA–233	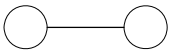	INSTALL HEAD GUY, POLE TO POLE
	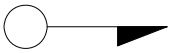	EXISTING POLE BRACKET
SA–351 & SA–352	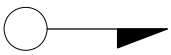	INSTALL WOOD POLE BRACKET
SA–341 & SA–342	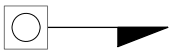	INSTALL STEEL POLE BRACKET
	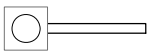	TRAFFIC SIGNAL MAST ARM

DESIGNED: A WOLAK	CHKD: D GREER	King County	METRO TRANSIT DIVISION TROLLEY OVERHEAD SYSTEM STANDARDS	DATE: APRIL 2008
DR: B FARISSB	SCALE: NONE			FILE
RECOM.	IBIS NO:		SYMBOLS AND ABBREVIATIONS	DWG. NO. SA–100
APPROVED: J DAVIS	CONTRACT NO:			SHT 1 OF 3

SYMBOLS	DESCRIPTION
⊗	PORCELAIN STRAIN INSULATOR
⊗	ADJUSTMENT POINT (AT INSULATOR)
— —— —	TROLLEY WIRE, (DOUBLE LINE) — —— — NEGATIVE ———— POSITIVE
————	TROLLEY WIRES, NEGATIVE AND POSITIVE (SINGLE LINE)
2.0%	STREET GRADE (DOWNHILL SLOPE)
SA#	TROLLEY STANDARD DRAWING NUMBER
○	BULLRING
	INDUCTIVE CONTROL ENCLOSURE ON POLE
	INDUCTIVE CONTROL ENCLOSURE ON WALL

DESIGNED A WOLAK	CHKD: D GREER	King County	METRO TRANSIT DIVISION TROLLEY OVERHEAD SYSTEM STANDARDS	DATE: APRIL 2008
DR: B FARISSB	SCALE: NONE			FILE
RECOM.	IBIS NO:		SYMBOLS AND ABBREVIATIONS	DWG. NO. SA–100
APPROVED J DAVIS	CONTRACT NO:			SHT 2 OF 3

ABBREVIATIONS

	BEB	BUILDING EYEBOLT
	CS	CURVE SEGMENT
	DCH	DOUBLE CURVE HANGER
	LHI	LEFT HAND INDUCTIVE SWITCH
	RHI	RIGHT HAND INDUCTIVE SWITCH
	LHD	LEFT HAND DIRECTIONAL SWITCH
	RHD	RIGHT HAND DIRECTIONAL SWITCH
	LHT	LEFT HAND TRAILING SWITCH
	RHT	RIGHT HAND TRAILING SWITCH
	RXO	RIGID CROSSOVER
	XOCS	RIGID CROSSOVER AND CURVE SEGMENT ASSEMBLY
1	IS	INSULATION IN THE STRAIGHT
1	IC	INSULATION IN THE CURVE
1	RS	RESET TO STRAIGHT

C	SEATTLE CITY LIGHT	PRESENTED IN VARIOUS JOINT USE POLE COMBINATIONS
L	LUMINAIRE, SED	
M	METRO	
S	TRAFFIC SIGNAL, SED	
T	TELEPHONE	
V	CABLE TV	

8M, 16M	COPPERWELD GUY WIRE
8MI, 16MI	COPPERWELD GUY WIRE, COVERED

No.	REVISION	BY	APP'D	DATE
1	REVISED AS CONSTRUCTED	CMS	DPG	06/05

DESIGNED: A WOLAK	CHKD: D GREER	King County	METRO TRANSIT DIVISION TROLLEY OVERHEAD SYSTEM STANDARDS	DATE: APRIL 2008
DR: B FARISSB	SCALE: NONE			FILE
RECOM.	IBIS NO:		SYMBOLS AND ABBREVIATIONS	DWG. NO. SA-100
APPROVED: J DAVIS	CONTRACT NO:			SHT 3 OF 3

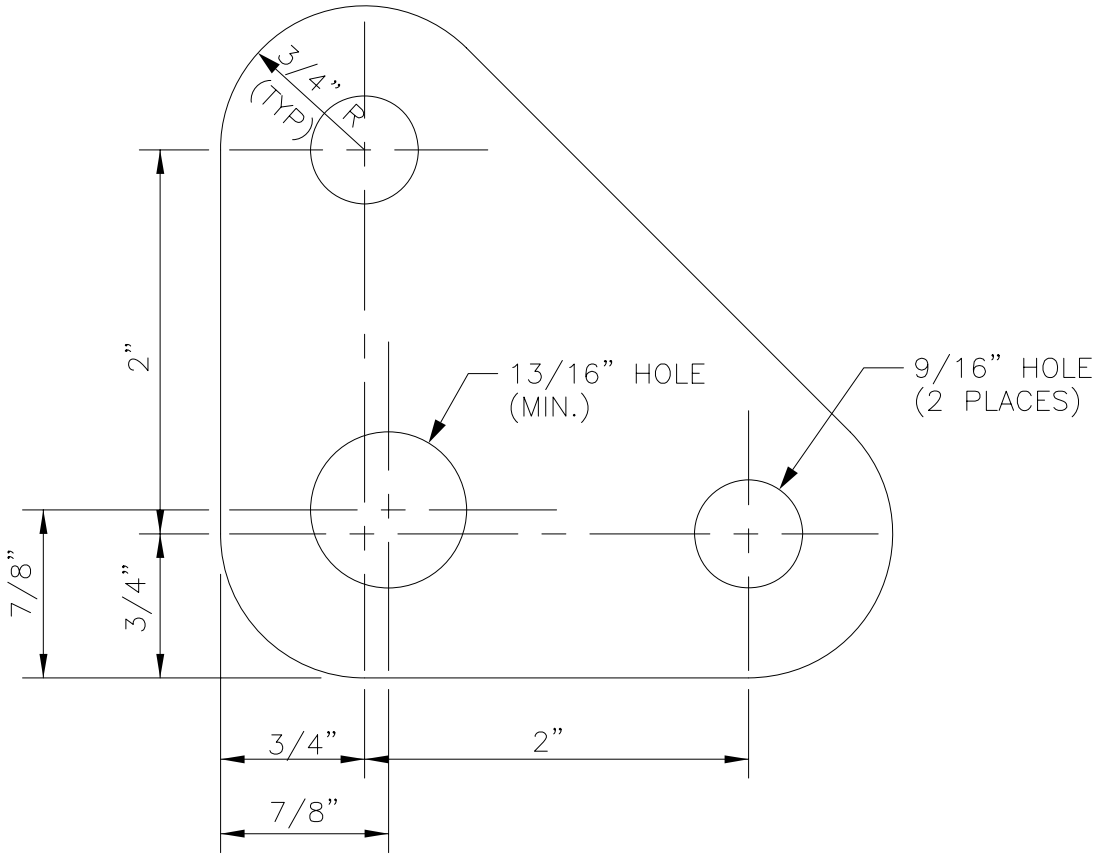

MATERIAL: ASTM A36 1/2" STEEL PLATE
HOT DIP GALVANIZE AFTER
FABRICATION.

NOTE: USED ON DOUBLE FEEDER SPANS
AND DEADENDS.

DESIGNED A WOLAK	CHKD: D GREER	King County	METRO TRANSIT DIVISION TROLLEY OVERHEAD SYSTEM STANDARDS	DATE: APRIL 2008
DR: B FARISSB	SCALE: NONE			FILE
RECOM.	IBIS NO:			DWG. NO. SA-101
APPROVED J DAVIS	CONTRACT NO:		STRAIN PLATE	SHT 1 OF 1

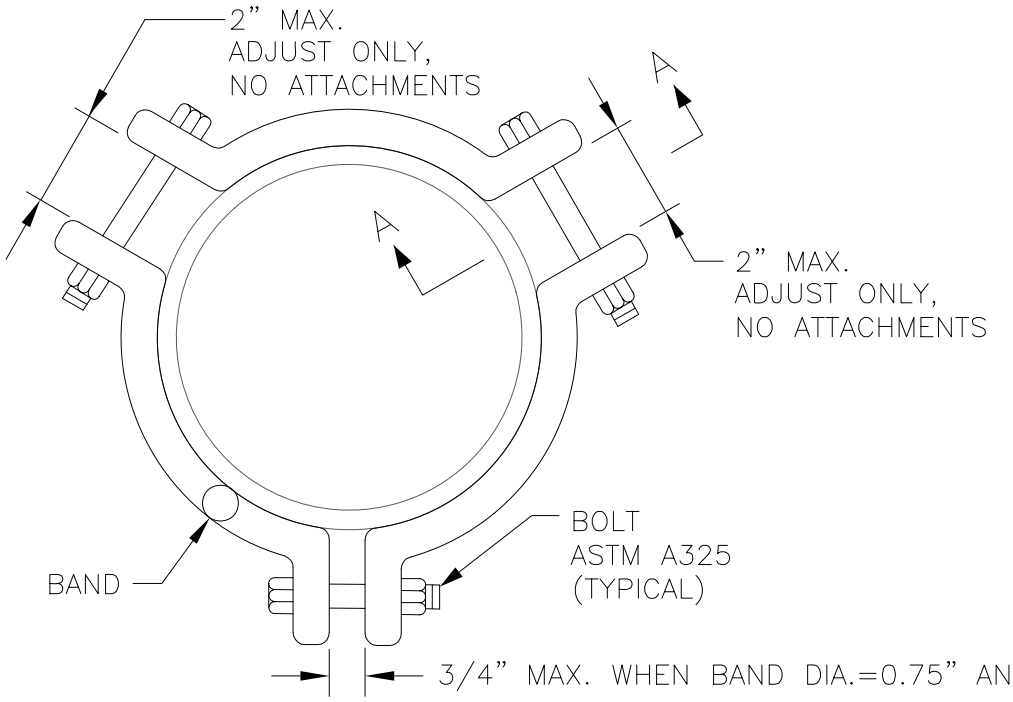

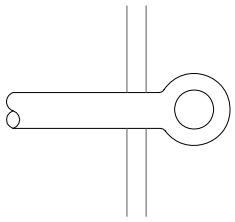

VIEW A–A

PLAN VIEW

COLLAR MAX LOAD=2500 LB			
DIAMETER RANGE	POLE SIZE		BAND & BOLT DIA.
	BUTT ø	ATT HT	
4.25" – 5.5"	8"	19' – 24'	.75"
6" – 7.25"	10"	19' – 29'	.75"
7" – 8.25"	11"	19' – 29'	.75"
8" – 9.25"	12"	19' – 29'	.75"
9" – 10.25"	13"	19' – 29'	.75"
10" – 11.25"	14"	19' – 29'	.75"
11" – 12.25"	15"	19' – 29'	.75"

COLLAR MAX LOAD=5000 LB			
DIAMETER RANGE	POLE SIZE		BAND & BOLT DIA.
	BUTT ø	ATT HT	
9" – 10.25"	13"	19' – 29'	1"
10" – 11.25"	14"	19' – 29'	1"
11" – 12.25"	15"	19' – 29'	1"

NOTES

1. CONTACT KORTICK MFG CO AT: 5600 3RD ST, SAN FRANCISCO, CA (415) 822–6660
2. MAXIMUM NUMBER OF ATTACHMENTS PER COLLAR IS ONE, UNLESS APPROVED BY THE ENGINEER.

MATERIAL LIST

ITEM #	QTY	DESCRIPTION	MANUFACTURER	CAT. NO.
102	VARIES	FORGED THREE–PIECE ADJUSTABLE POLE BAND, ANNEALED & GALVANIZED	KORTICK MFG CO	

DESIGNED A WOLAK	CHKD: D GREER	King County	METRO TRANSIT DIVISION TROLLEY OVERHEAD SYSTEM STANDARDS	DATE: APRIL 2008
DR: B FARISSB	SCALE: NONE			FILE
RECOM.	IBIS NO:			DWG. NO. SA–102
APPROVED J DAVIS	CONTRACT NO:		STEEL POLE COLLAR	SHT 1 OF 1

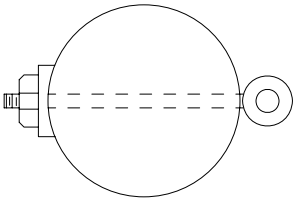

PLAN

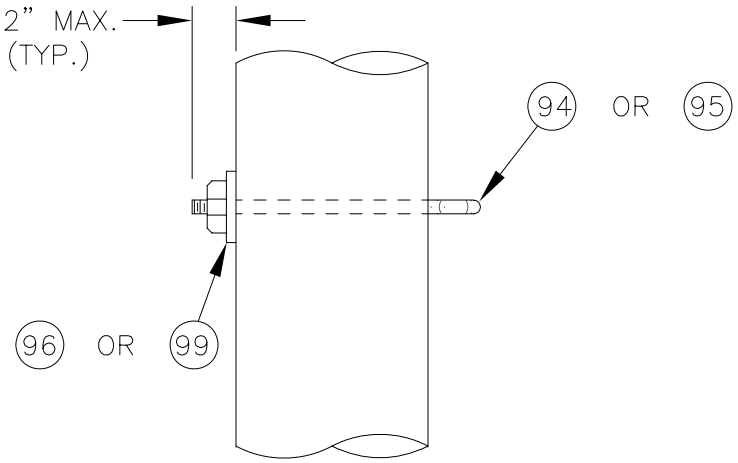

WOOD POLE EYEBOLT

NOTES:

1. WOOD POLE EYEBOLTS SHALL HAVE A MINIMUM DIAMETER OF 5/8". 5/8" DIAMETER EYEBOLTS SHALL BE USED FOR WOOD POLE ATTACHMENT OF ALL SINGLE 8M TANGENT WORK SPANS. 3/4" DIAMETER EYEBOLTS SHALL BE USED FOR ALL OTHER WOOD POLE ATTACHMENTS.

2. MULTIPLE CABLE ATTACHMENTS TO 3/4" DIAMETER EYEBOLTS SHALL BE LIMITED TO A RESOLVED (RESULTANT) DESIGN TENSION OF 5000 LBS @ 60 DEGREES F.

MATERIAL LIST

ITEM #	QTY	DESCRIPTION	MANUFACTURER	CAT. NO.
94	*	5/8" OVAL EYEBOLT W/ NUT	JOSLYN	J94XX
95	*	3/4" OVAL EYEBOLT W/ NUT	JOSLYN	J95XX
96	*	SQ CURVED WASHER 3"x3"x1/4", 1 1/16" DIA	JOSLYN	J113
99	*	SQ CURVED WASHER 3"x3"x1/4", 13/16" DIA	JOSLYN	J6823

DESIGNED A WOLAK	CHKD: D GREER	King County	METRO TRANSIT DIVISION TROLLEY OVERHEAD SYSTEM STANDARDS	DATE: APRIL 2008
DR: B FARISSB	SCALE: NONE			FILE
RECOM.	IBIS NO:		WOOD POLE EYEBOLT ASSEMBLY	DWG. NO. SA-103
APPROVED J DAVIS	CONTRACT NO:			SHT 1 OF 1

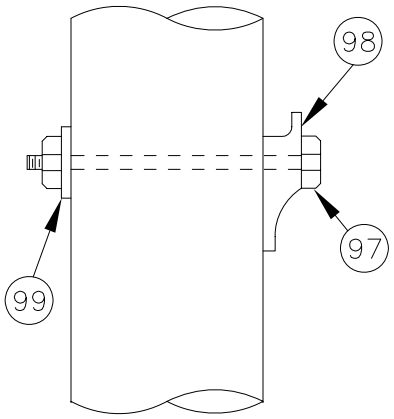

WOOD POLE
DOWN GUY ATTACHMENT

MATERIAL LIST

ITEM #	QTY	DESCRIPTION	MANUFACTURER	CAT. NO.
97	1	¾" MACHINE BOLT	JOSLYN	J89XX
98	1	GUY HOOK, ¾"	STANLEY	P133AX
99	1	SQ CURVED WASHER 3"x3"x¼",1 3/16" DIA	JOSLYN	J6823

DESIGNED: A WOLAK	CHKD: D GREER	King County	METRO TRANSIT DIVISION TROLLEY OVERHEAD SYSTEM STANDARDS WOOD POLE DOWN GUY ASSEMBLY	DATE: APRIL 2008
DR: B FARISSB	SCALE: NONE			FILE
RECOM.	IBIS NO:			DWG. NO. SA–104
APPROVED: J DAVIS	CONTRACT NO:			SHT 1 OF 1

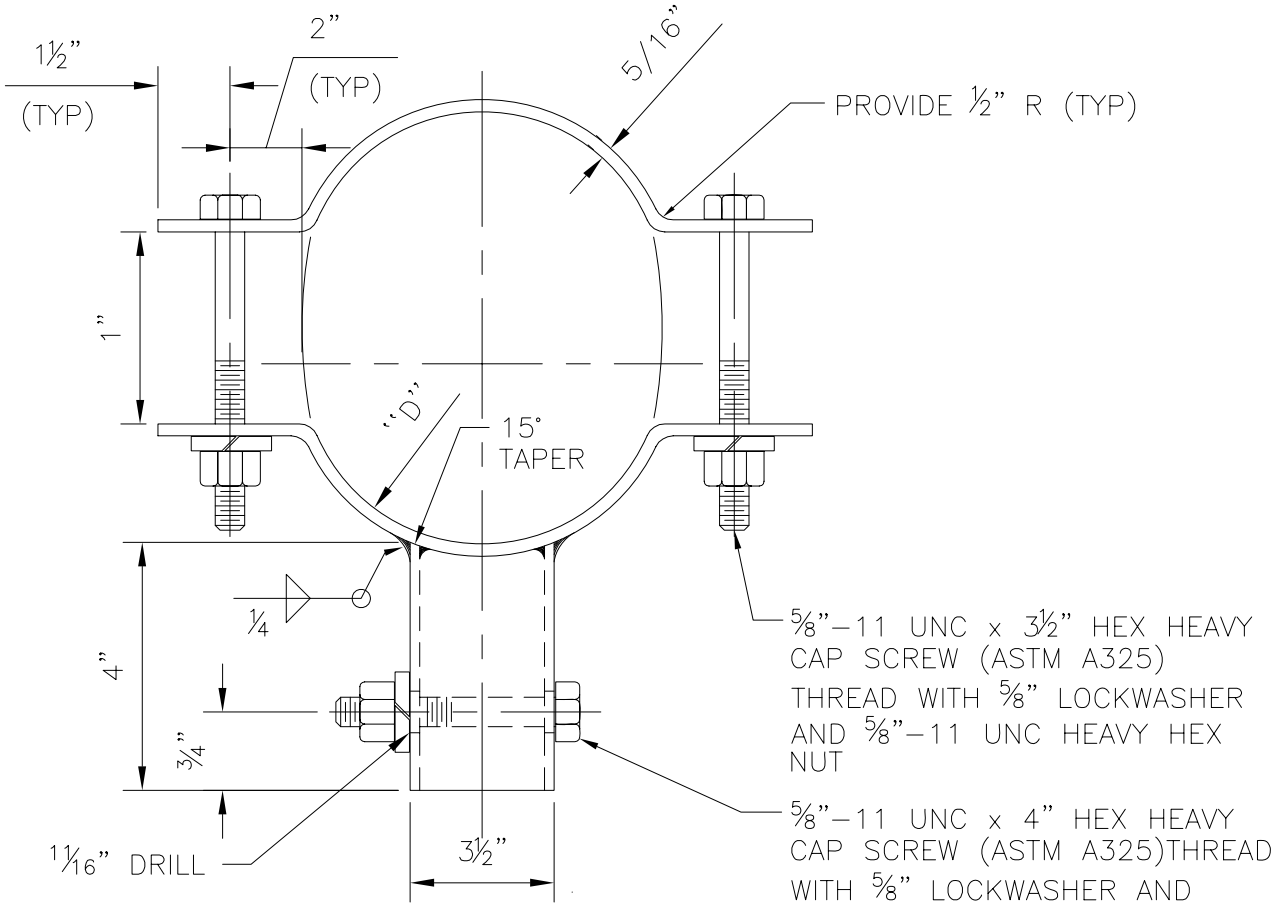

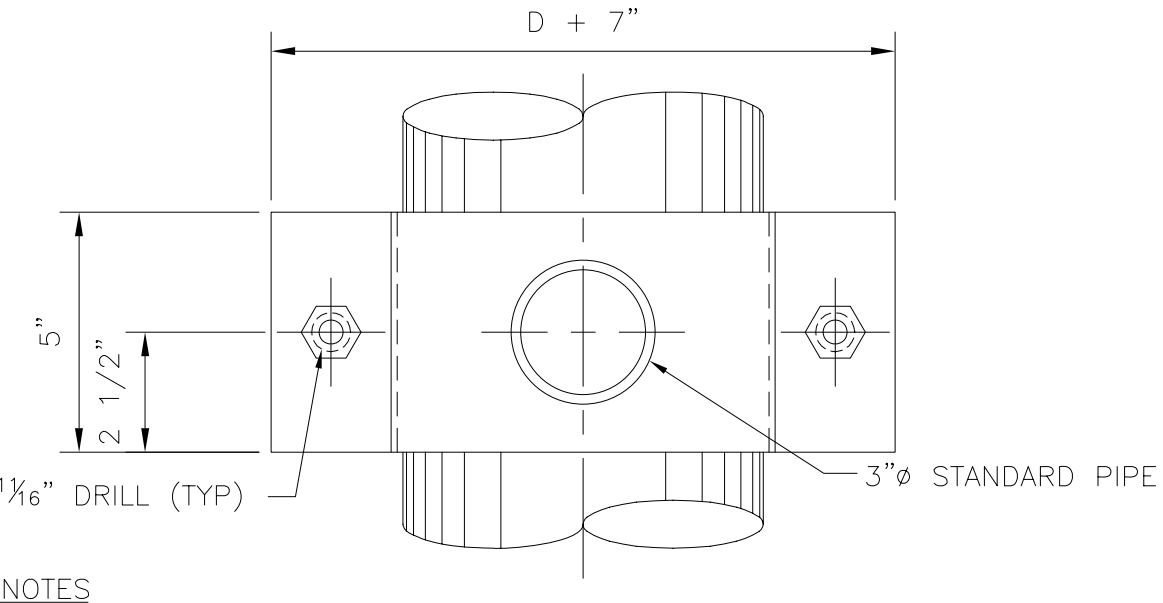

NOTES

1. DIMENSION "D" TO BE FIELD MEASURED AT DESIGN ATTACHMENT HEIGHT.
2. MATERIAL FOR COLLARS SHALL BE ASTM A–36 STEEL. HOT DIP GALVANIZE METAL AFTER FABRICATION.

DESIGNED: A WOLAK	CHKD: D GREER	King County	METRO TRANSIT DIVISION TROLLEY OVERHEAD SYSTEM STANDARDS	DATE: APRIL 2008
DR: B FARISSB	SCALE: NONE			FILE
RECOM.	IBIS NO:		COMPRESSION POLE BRACKET POLE COLLAR	DWG. NO. SA–106
APPROVED: J DAVIS	CONTRACT NO:			SHT 1 OF 1

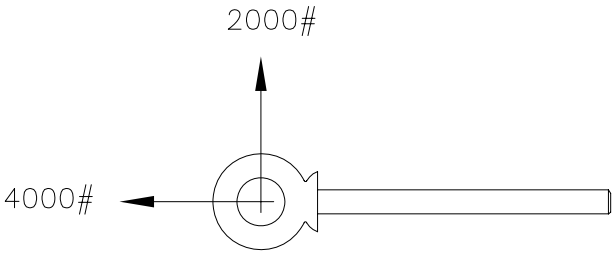

ALLOWABLE DEAD LOAD AT 60°.

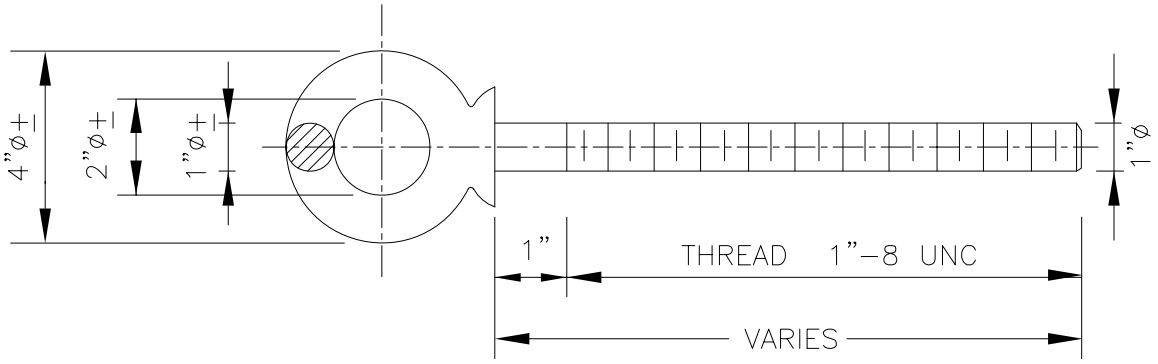

NOTES:

1. EYEBOLT SHALL BE 1" DROP FORGED, STAINLESS STEEL, SHOULDER PATTERN; MADE FROM TYPE 316 STAINLESS STEEL, UNC–2 THREADS, ELECTRO–POLISHED FINISH.

2. EYEBOLT SHALL BE MCGRAW–EDISON, CAMPBELL CHAIN M–29–ST 640–5015, MCMASTER–CARR 3032T49. NUMBERS ARE FOR 6" LENGTH; OTHER LENGTHS ARE SPECIAL.

3. MATERIAL YIELD STRESS SHALL BE 30,000 PSI MIN. TENSILE STRESS SHALL BE 75,000 PSI MIN.

DESIGN NOTES:

1. THE DEAD LOAD + LIVE LOAD IS 2 TIMES THE ALLOWABLE DEAD LOAD AT 60°. THE BREAKING LOAD IS 4 TIMES THE ALLOWABLE DEAD LOAD AT 60°.

DESIGNED A WOLAK	CHKD: D GREER	King County	METRO TRANSIT DIVISION TROLLEY OVERHEAD SYSTEM STANDARDS	DATE: APRIL 2008
DR: B FARISSB	SCALE: NONE			FILE
RECOM.	IBIS NO:		STAINLESS STEEL EYEBOLT	DWG. NO. SA–107
APPROVED J DAVIS	CONTRACT NO:			SHT 1 OF 1

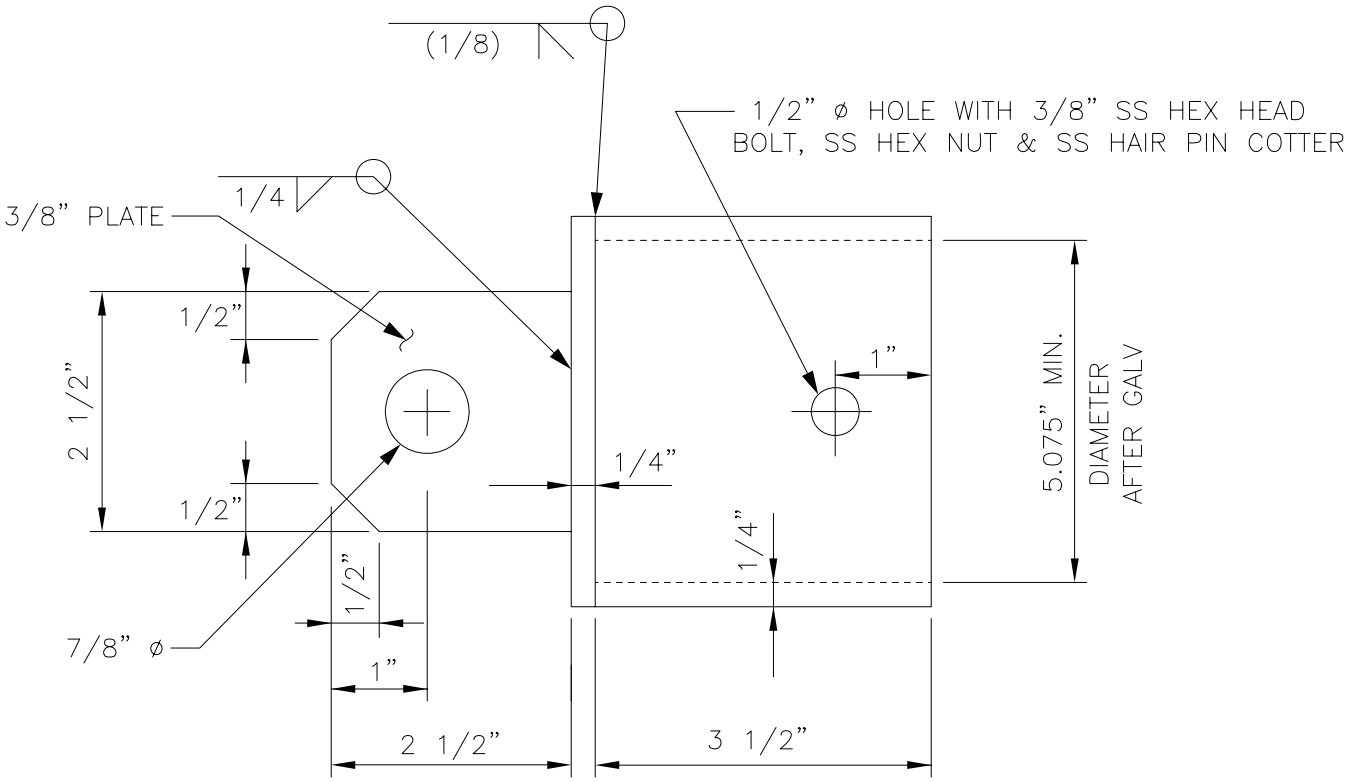

POLE END CAP DETAIL

NOTES:

1. GALVANIZE AFTER FABRICATION.

DESIGNED A WOLAK	CHKD: D GREER	King County	METRO TRANSIT DIVISION TROLLEY OVERHEAD SYSTEM STANDARDS	DATE: APRIL 2008
DR: B FARISSB	SCALE: NONE			FILE
RECOM.	IBIS NO:		BRACKET ARM POLE END CAP	DWG. NO. SA–108
APPROVED J DAVIS	CONTRACT NO:			SHT 1 OF 1

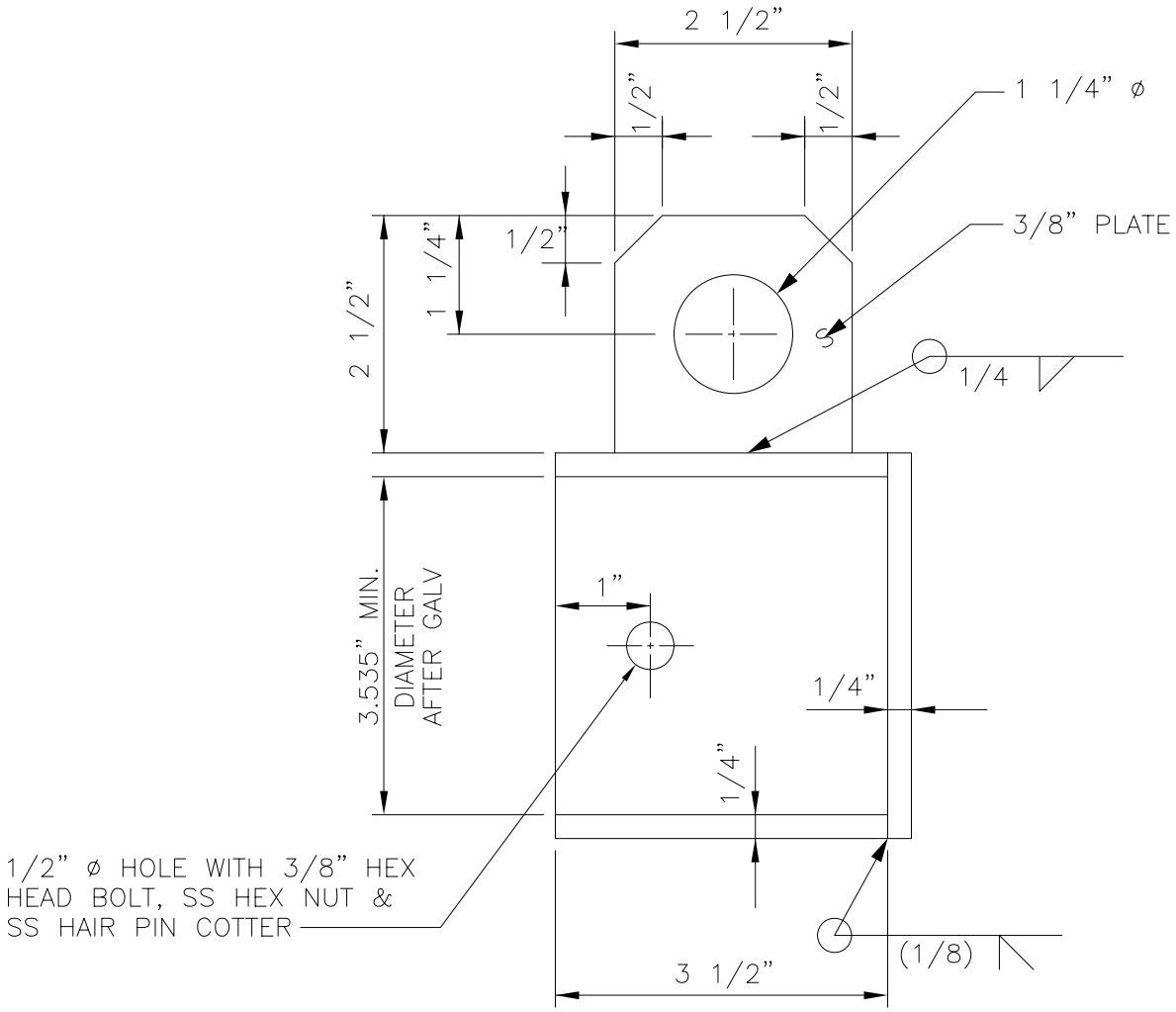

ARM END CAP DETAIL

NOTES:

1. GALVANIZE AFTER FABRICATION.

DESIGNED A WOLAK	CHKD: D GREER	King County	METRO TRANSIT DIVISION TROLLEY OVERHEAD SYSTEM STANDARDS	DATE: APRIL 2008
DR: B FARISSB	SCALE: NONE			FILE
RECOM.	IBIS NO:		BRACKET ARM END CAP	DWG. NO. SA–109
APPROVED J DAVIS	CONTRACT NO:			SHT 1 OF 1

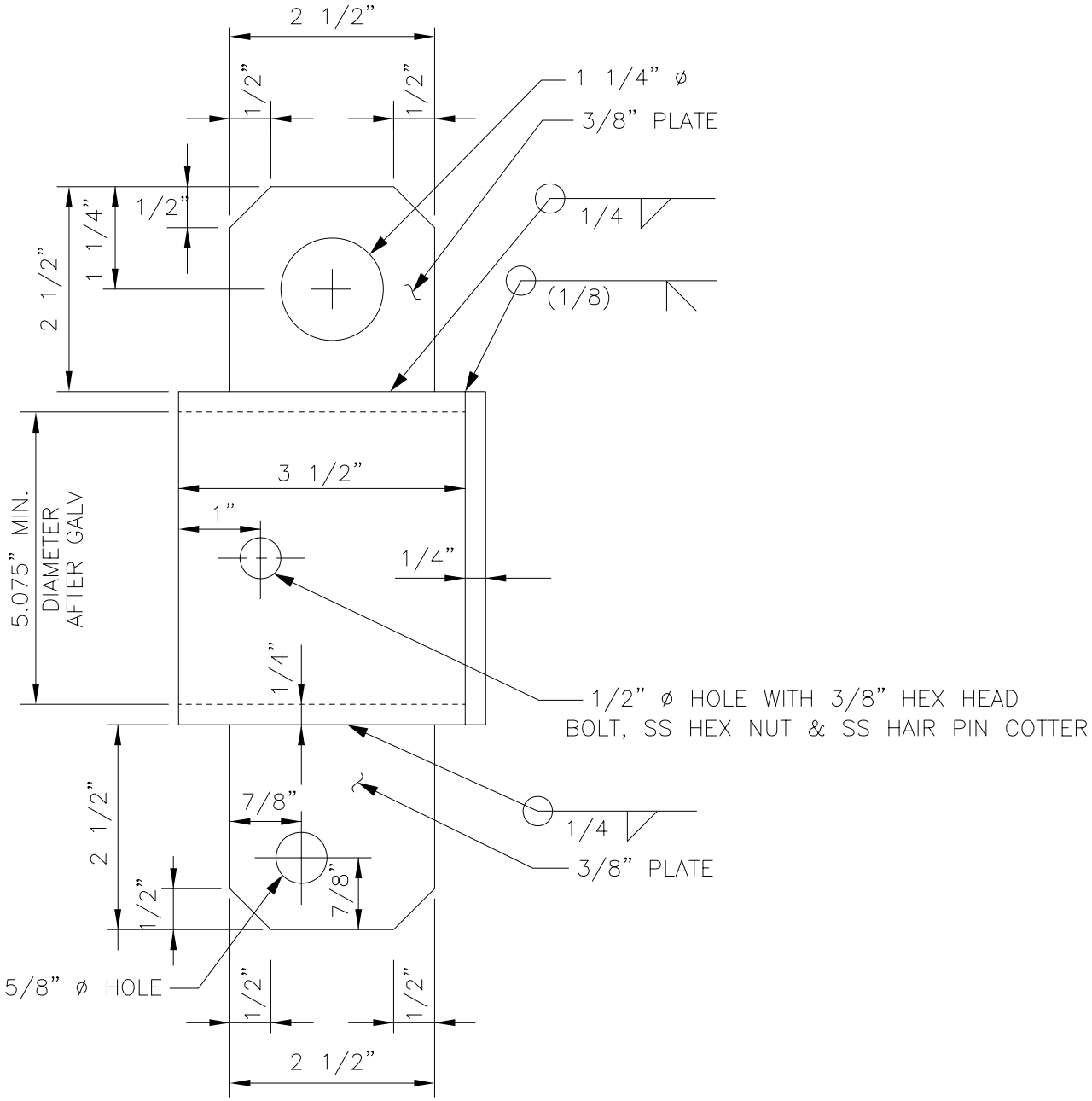

UNDERSLING END CAP DETAIL

NOTES:

1. GALVANIZE AFTER FABRICATION.

DESIGNED A WOLAK	CHKD: D GREER	King County	METRO TRANSIT DIVISION TROLLEY OVERHEAD SYSTEM STANDARDS	DATE: APRIL 2008
DR: B FARISSB	SCALE: NONE			FILE
RECOM.	IBIS NO:		BRACKET ARM SPAN END CAP	DWG. NO. SA–110
APPROVED J DAVIS	CONTRACT NO:			SHT 1 OF 1

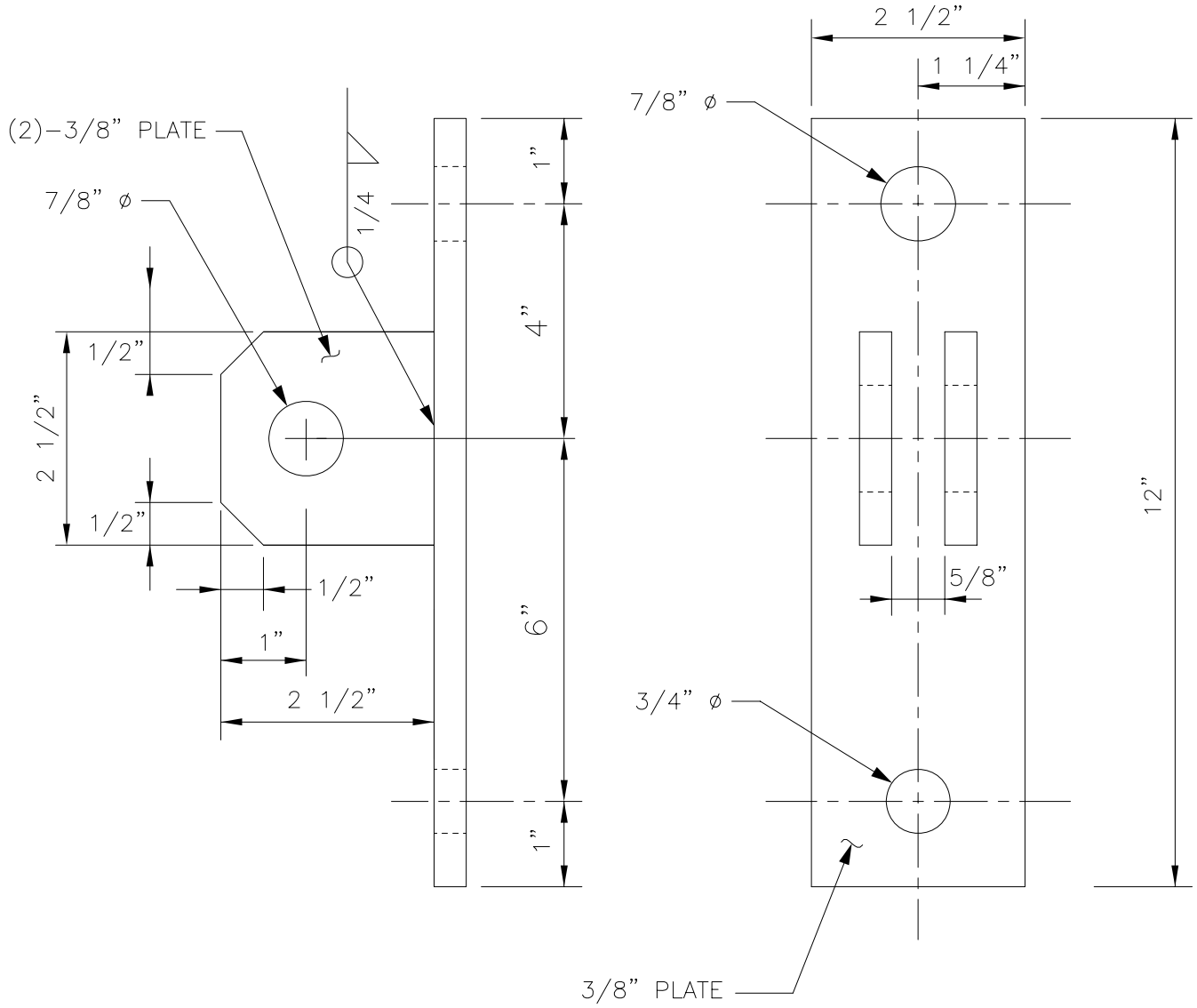

WOOD POLE

MOUNTING BRACKET DETAIL

NOTES:

1. GALVANIZE AFTER FABRICATION.

DESIGNED A WOLAK	CHKD: D GREER	King County	METRO TRANSIT DIVISION TROLLEY OVERHEAD SYSTEM STANDARDS	DATE: APRIL 2008
DR: B FARISSB	SCALE: NONE			FILE
RECOM.	IBIS NO:		WOOD POLE MOUNTING BRACKET	DWG. NO. SA–111
APPROVED J DAVIS	CONTRACT NO:			SHT 1 OF 1

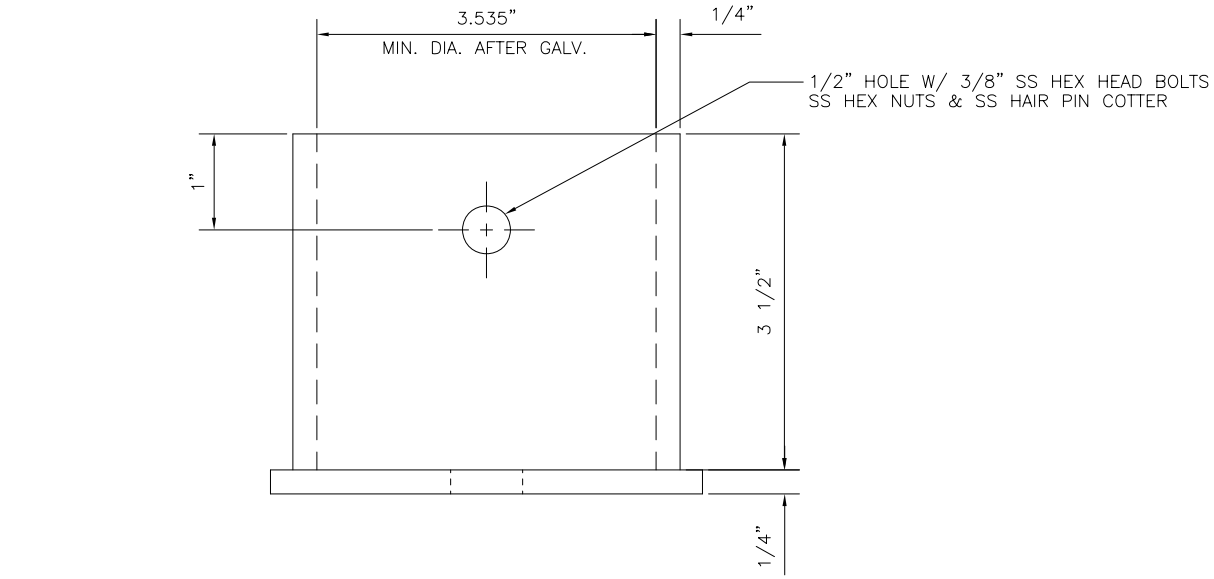

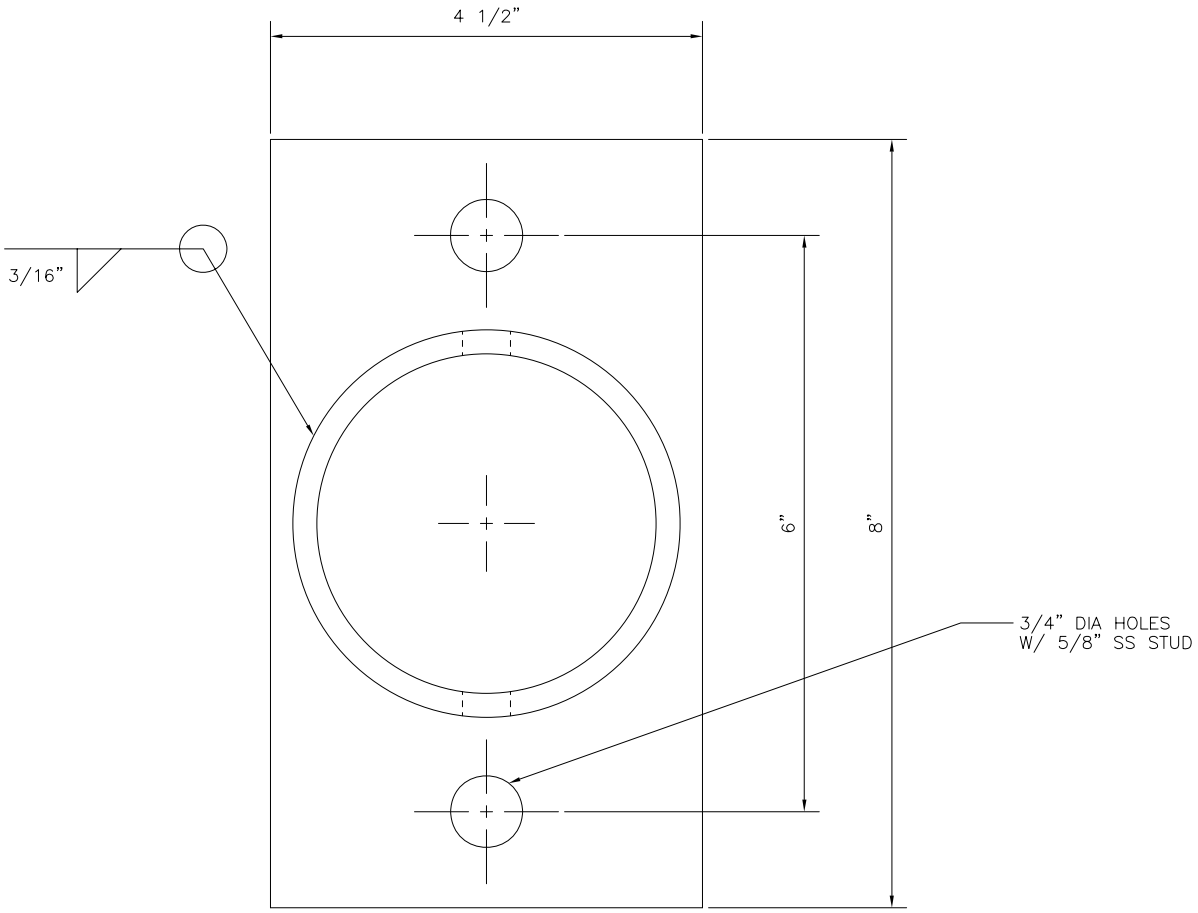

NOTE: HOT DIP GALVANIZE AFTER FABRICATION

3.5" TUBE SOCKET PLATE

DESIGNED A WOLAK	CHKD: D GREER	King County	METRO TRANSIT DIVISION TROLLEY OVERHEAD SYSTEM STANDARDS	DATE: APRIL 2008
DR: B FARISSB	SCALE: NONE			FILE
RECOM.	IBIS NO:		3.5" TUBE SOCKET PLATE	DWG. NO. SA–112
APPROVED J DAVIS	CONTRACT NO:			SHT 1 OF 1

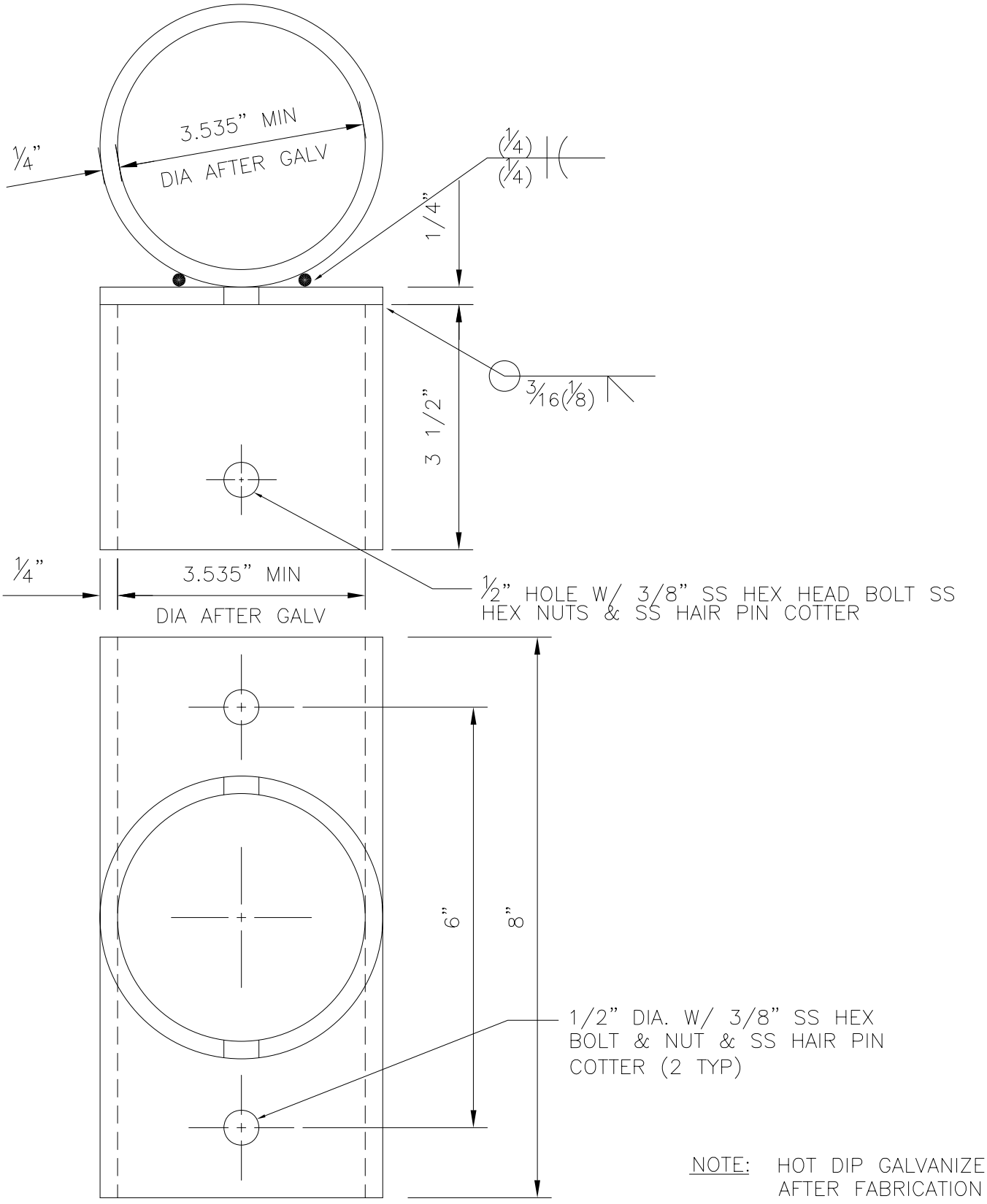

NOTE: HOT DIP GALVANIZE AFTER FABRICATION

3.5" TUBE TEE SLIPFIT & SOCKET

DESIGNED A WOLAK	CHKD: D GREER	King County	METRO TRANSIT DIVISION TROLLEY OVERHEAD SYSTEM STANDARDS	DATE: APRIL 2008
DR: B FARISSB	SCALE: NONE			FILE
RECOM.	IBIS NO:		3.5" TUBE TEE SLIPFIT & SOCKET	DWG. NO. SA–113
APPROVED J DAVIS	CONTRACT NO:			SHT 1 OF 1

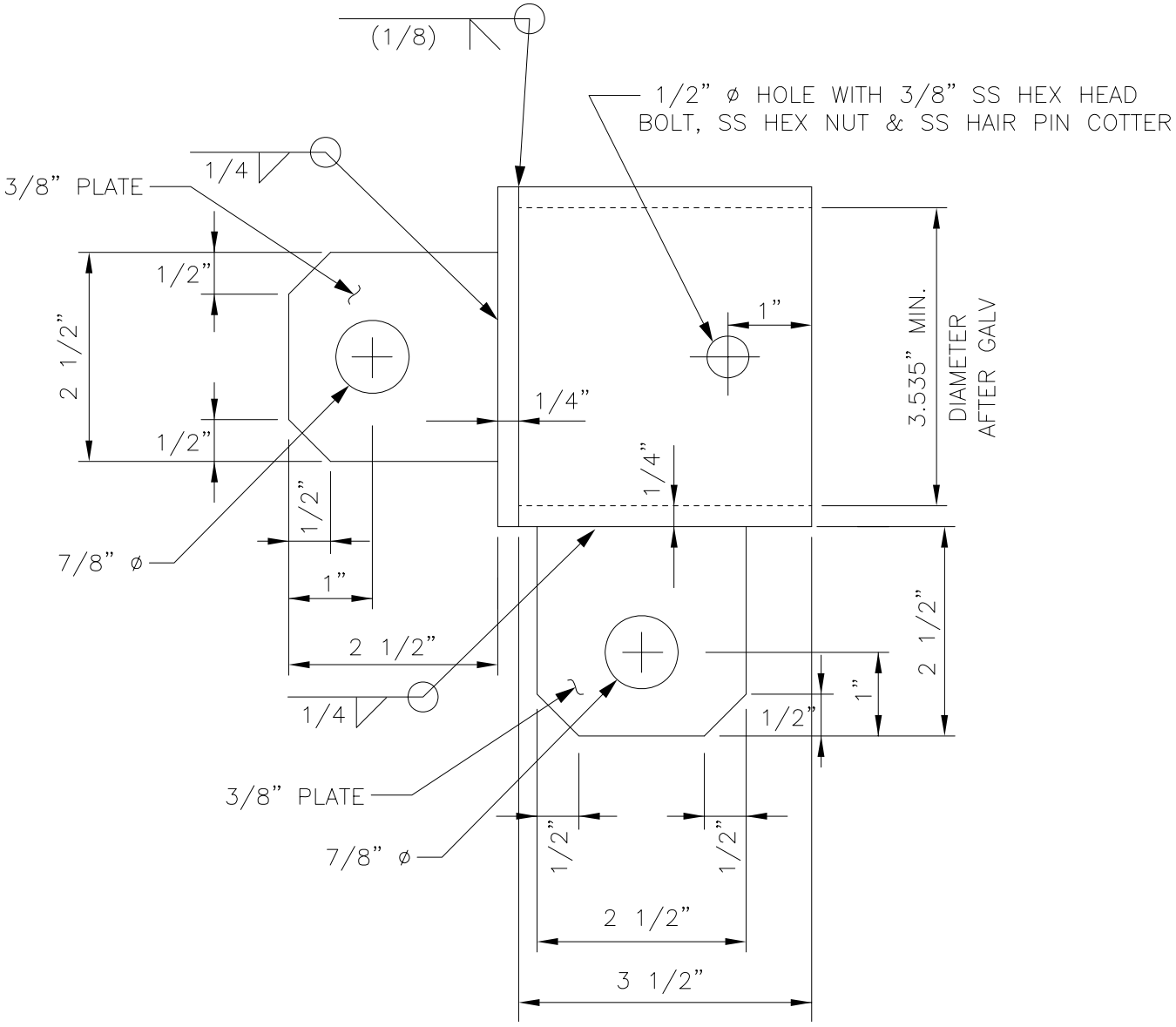

POLE END CAP WITH BOTTOM TAB DETAIL

NOTES:

1. GALVANIZE AFTER FABRICATION.

DESIGNED A WOLAK	CHKD: D GREER	King County	METRO TRANSIT DIVISION TROLLEY OVERHEAD SYSTEM STANDARDS BRACKET ARM POLE END CAP WITH BOTTOM TAB	DATE: APRIL 2008
DR: B FARISSB	SCALE: NONE			FILE
RECOM.	IBIS NO:			DWG. NO. SA–114
APPROVED J DAVIS	CONTRACT NO:			SHT 1 OF 1

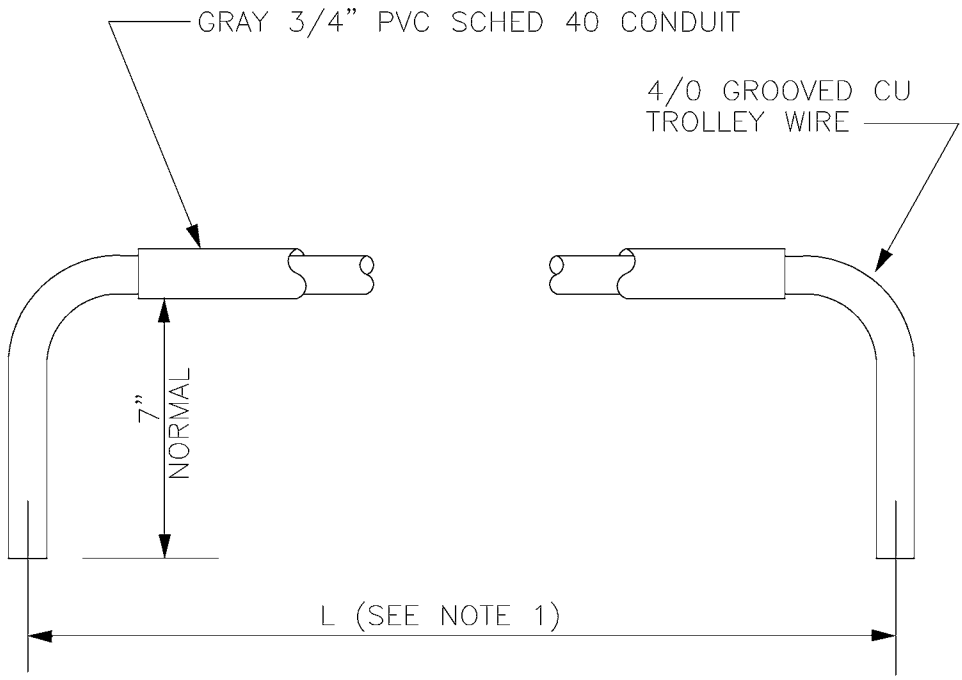

NOTES:

1. JUMPER WIRE AND ASSOCIATED INSULATING SLEEVE SHALL BE FIELD CUT TO LENGTH AS REQUIRED FOR EACH SPECIAL WORK DEVICE.

DESIGNED DPG	CHKD: DOW	King County	DEPARTMENT OF TRANSPORTATION TROLLEY STANDARDS	DATE: JUN 95
DR: CMS	SCALE: NONE			FILE
RECOM.	CONTRACT:		SPECIAL WORK INSULATED JUMPER ASSEMBLY	DWG. NO. SA-151
APPROVED				SHT 1 OF 1

V:\Library & Standards\Standards\Trolley\Details\SA-151-153.dwg, SA-151, 1/5/2007 12:18:24 PM

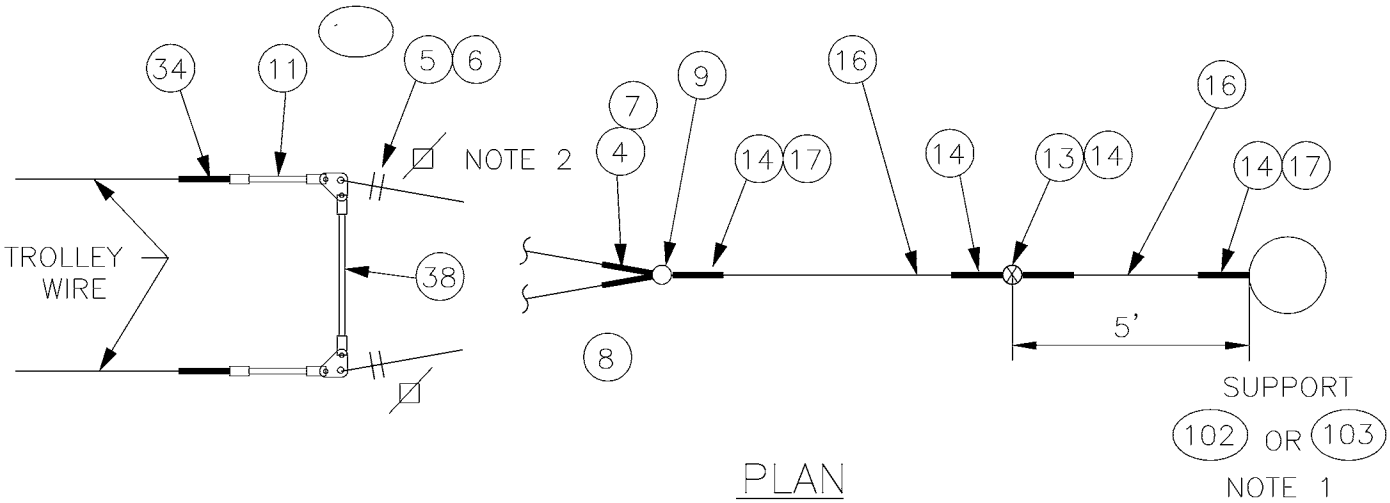

PLAN

DEAD END ASSEMBLY (A)

NOTES

1. A POLE COLLAR OR POLE EYEBOLT IS REQUIRED PER SA-102 OR SA-103 UNLESS A BUILDING EYEBOLT ATTACHMENT IS USED. INSTALLATION HEIGHT IS SHOWN ON THE OVERHEAD DRAWINGS.
2. PROVIDE TENSION ADJUSTMENT POINTS AT LOCATIONS INDICATED BY "⊠". PROVIDE WIRE ROPE CLIPS AT THESE LOCATIONS. SEE SA-166.

MATERIAL LIST

ITEM #	QTY	DESCRIPTION	MANUFACTURER	CAT. NO.
	2	GUY STRAIN INSUL	PORCELAIN PRODUCTS CO.	504
	6	GUY GRIP DEADEND	PREFORMED	CDE-3106
	4	WIRE ROPE CLIP, 5/16"	CROSBY	G450
	AS REQD	FRICTION TAPE, 3/4" (6 WRAPS)		
	2	THIMBLE, 3/8" XHD, OPEN	CROSBY	G414
	VARIES	GUY STRAND	COPPERWELD	8M
	1	BULL RING	WABCO	18567-2000
	2	7/8 TRANSLITE STRAIN INSUL CL-CL	WABCO	54975-6120
	1		PORCELAIN PRODUCTS CO.	506
	4	GUY GRIP DEADEND	PREFORMED	CDE-3115
	VARIES	GUY STRAND	COPPERWELD	16M
	2	THIMBLE, 1/2" XHD, OPEN	CROSBY	G414
	2		WABCO	17700-2000
	1	SLITE STRAIN INSUL CL-CL	WABCO	54975-6200
	2		WABCO	13722-2000
	2		METRO STD	SA-101
	VARIES VARIES		KORTICK MFG CO METRO STD	 SA-103

DESIGNED DPG	CHKD: DOW	King County	DEPARTMENT OF TRANSPORTATION TROLLEY STANDARDS	DATE: OCT 95
DR: TMB	SCALE: NONE			FILE
RECOM.	CONTRACT:		TROLLEY WIRE DEADEND ASSEMBLY	DWG. NO. SA-152
APPROVED				SHT 1 OF 2

V:\Library & Standards\Standards\Trolley\Details\SA-151-153.dwg, SA-152.1, 1/5/2007 12:18:30 PM

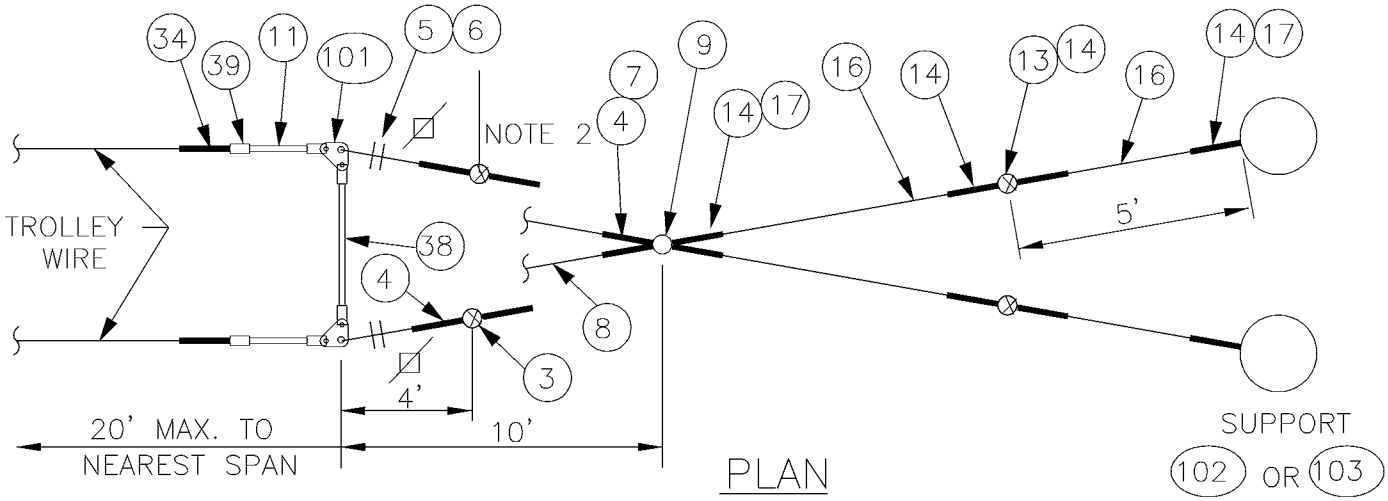

PLAN

DEAD END ASSEMBLY (B)

NOTES

1. A POLE COLLAR OR POLE EYEBOLT IS REQUIRED PER SA-102 OR SA-103 UNLESS A BUILDING EYEBOLT ATTACHMENT IS USED. INSTALLATION HEIGHT IS SHOWN ON THE OVERHEAD DRAWINGS.
2. PROVIDE TENSION ADJUSTMENT POINTS AT LOCATIONS INDICATED BY "⊠". PROVIDE WIRE ROPE CLIPS AT THESE LOCATIONS. SEE SA-166.

MATERIAL LIST

ITEM #	QTY	DESCRIPTION	MANUFACTURER	CAT. NO.
03	2	GUY STRAIN INSUL	PORCELAIN PRODUCTS CO.	504
04	6	GUY GRIP DEADEND	PREFORMED	CDE-3106
05	4	WIRE ROPE CLIP, 5/16"	CROSBY	G450
06	AS REQD	FRICTION TAPE, 3/4" (6 WRAPS)		
07	2	THIMBLE, 3/8" XHD, OPEN	CROSBY	G414
08	VARIES	GUY STRAND	COPPERWELD	8M
09	1	BULL RING	WABCO	18567-2000
11	2	7/8 TRANSLITE STRAIN INSUL CL-CL	WABCO	54975-6120
13	1	GUY STRAIN INSUL	PORCELAIN PRODUCTS CO.	506
14	4	GUY GRIP DEADEND	PREFORMED	CDE-3115
16	VARIES	GUY STRAND	COPPERWELD	16M
17	2	THIMBLE, 1/2" XHD, OPEN	CROSBY	G414
34	2	TYPE T DOUBLE EAR STRAIN CLAMP	WABCO	17700-2000
38	1	7/8 TRANSLITE STRAIN INSUL CL-CL	WABCO	54975-6200
39	2	5/8" SHACKLE	WABCO	13722-2000
101	2	STRAIN PLATE	METRO STD	SA-101
102	VARIES	FORGED THREE-PIECE ADJUSTABLE POLE BAND, ANNEALED & GALVANIZED	KORTICK MFG CO	
103	VARIES	WOOD POLE EYEBOLT	METRO STD	SA-103

DESIGNED DPG	CHKD: DOW	King County	DEPARTMENT OF TRANSPORTATION TROLLEY STANDARDS	DATE: OCT 95
DR: TMB	SCALE: NONE			FILE
RECOM.	CONTRACT:		TROLLEY WIRE DEADEND ASSEMBLY	DWG. NO. SA-152
APPROVED				SHT 2 OF 2

V:\Library & Standards\Standards\Trolley\Details\SA-151-153.dwg, SA-152.2, 1/5/2007 12:18:39 PM

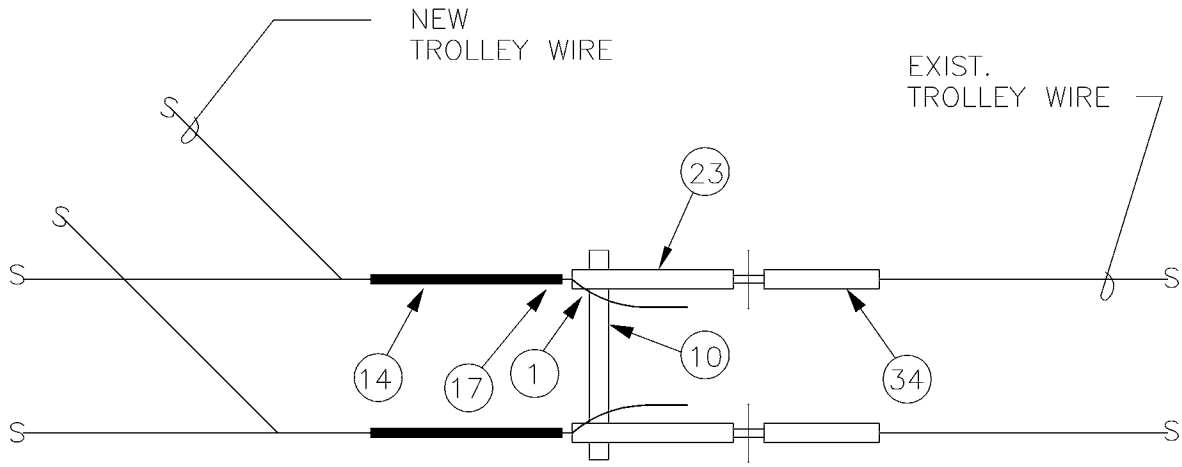

PLAN

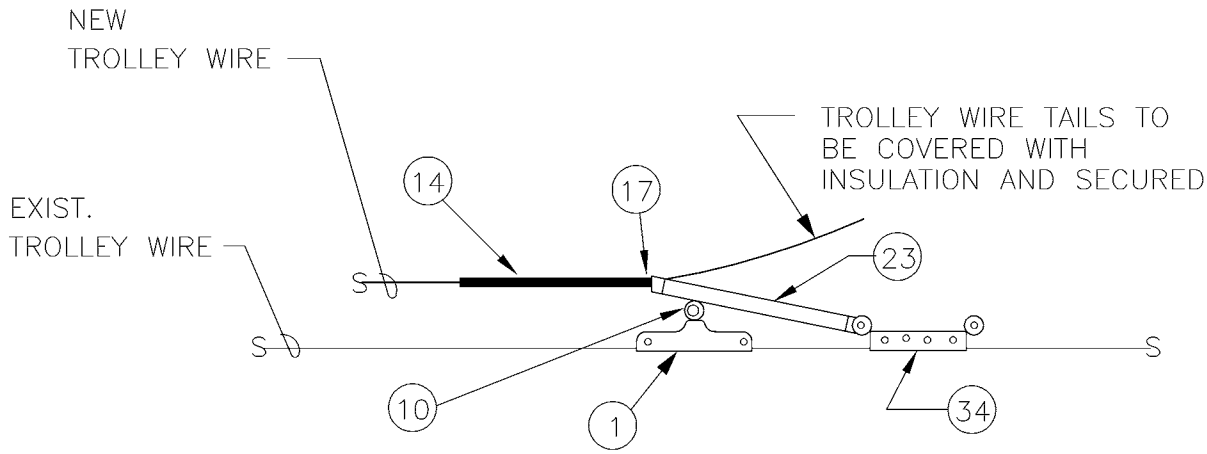

ELEVATION

SCALE: NONE

MATERIAL LIST

ITEM #	QTY	DESCRIPTION	MANUFACTURER	CAT. NO.
01	2	DETROIT CLAMP ASSY	WABCO	19293-3007
10	1	HI-LITE DOUBLE CURVE HANGER	WABCO	54962-3001
14	2	GUY GRIP DEADEND	PREFORMED	CDE-3115
17	2	THIMBLE, 1/2" XHD, OPEN	CROSBY	G414
23	2	7/8 TRANSLITE STRAIN INSUL CL-CL	WABCO	54975-6260
34	2	TYPE T DOUBLE EAR STRAIN CLAMP	WABCO	17700-2000

DESIGNED: DPG	CHKD: DOW	King County	DEPARTMENT OF TRANSPORTATION TROLLEY STANDARDS	DATE: JUN 95
DR: TMB	SCALE: NONE			FILE
RECOM.	CONTRACT:		STAGING DEADEND ASSEMBLY	DWG. NO. SA-153
APPROVED				SHT 1 OF 1

V:\Library & Standards\Standards\Trolley\Details\SA-151-153.dwg, SA-153, 1/5/2007 12:18:46 PM

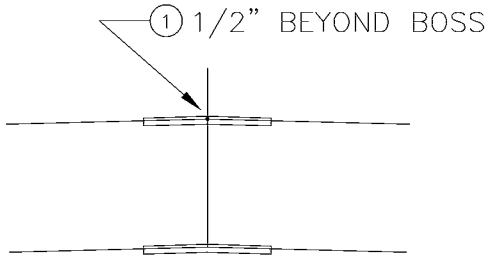

1°–5° CURVE RAIL

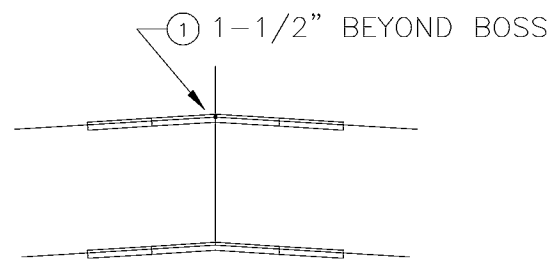

5.5°–7.5° CURVE RAIL

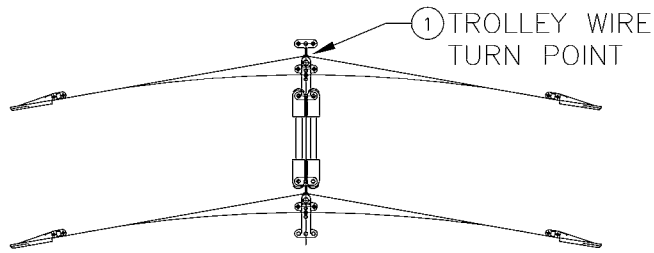

8°–12° & 13°–27° CURVE SEGMENT

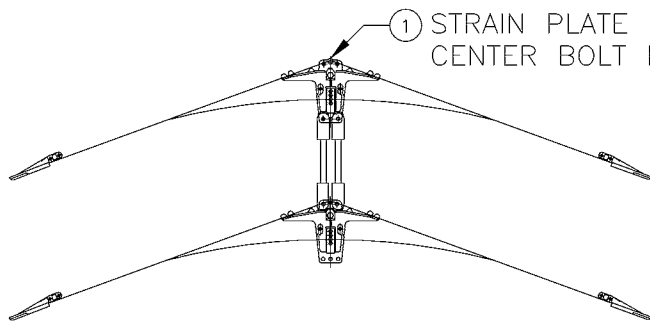

28°–47° CURVE SEGMENT

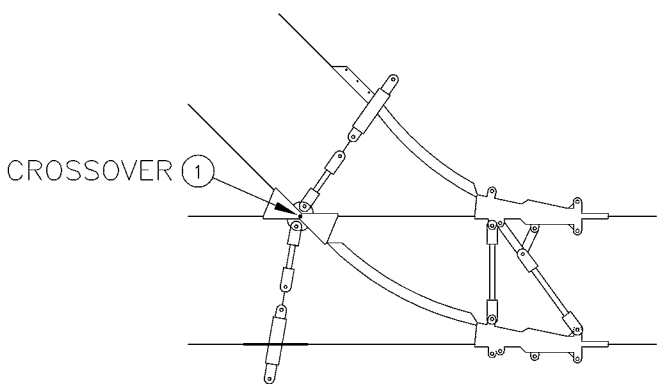

SWITCH OR TRAILING FROG

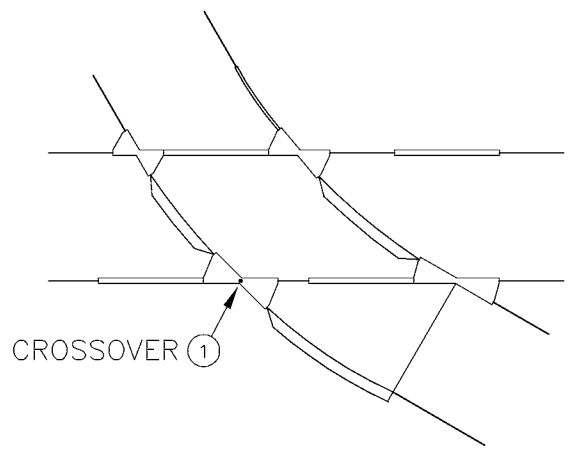

CROSSOVER/CURVE SEGMENT

1 DEVICE REFERENCE POINT

DESIGNED DPG	CHKD: DOW	King County	DEPARTMENT OF TRANSPORTATION TROLLEY STANDARDS	DATE: JUN 95
DR: CMS	SCALE: NONE			FILE
RECOM.	CONTRACT:		SPECIALWORK DEVICE REFERENCE POINT LOCATIONS	DWG. NO. SA–161
APPROVED				SHT 1 OF 1

V:\Library & Standards\Standards\Trolley\Details\SA-161&163.dwg, SA-161, 1/5/2007 12:18:54 PM

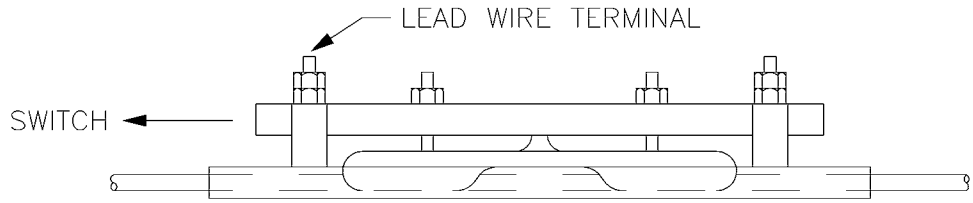

CONTACTOR ELEVATION A–A

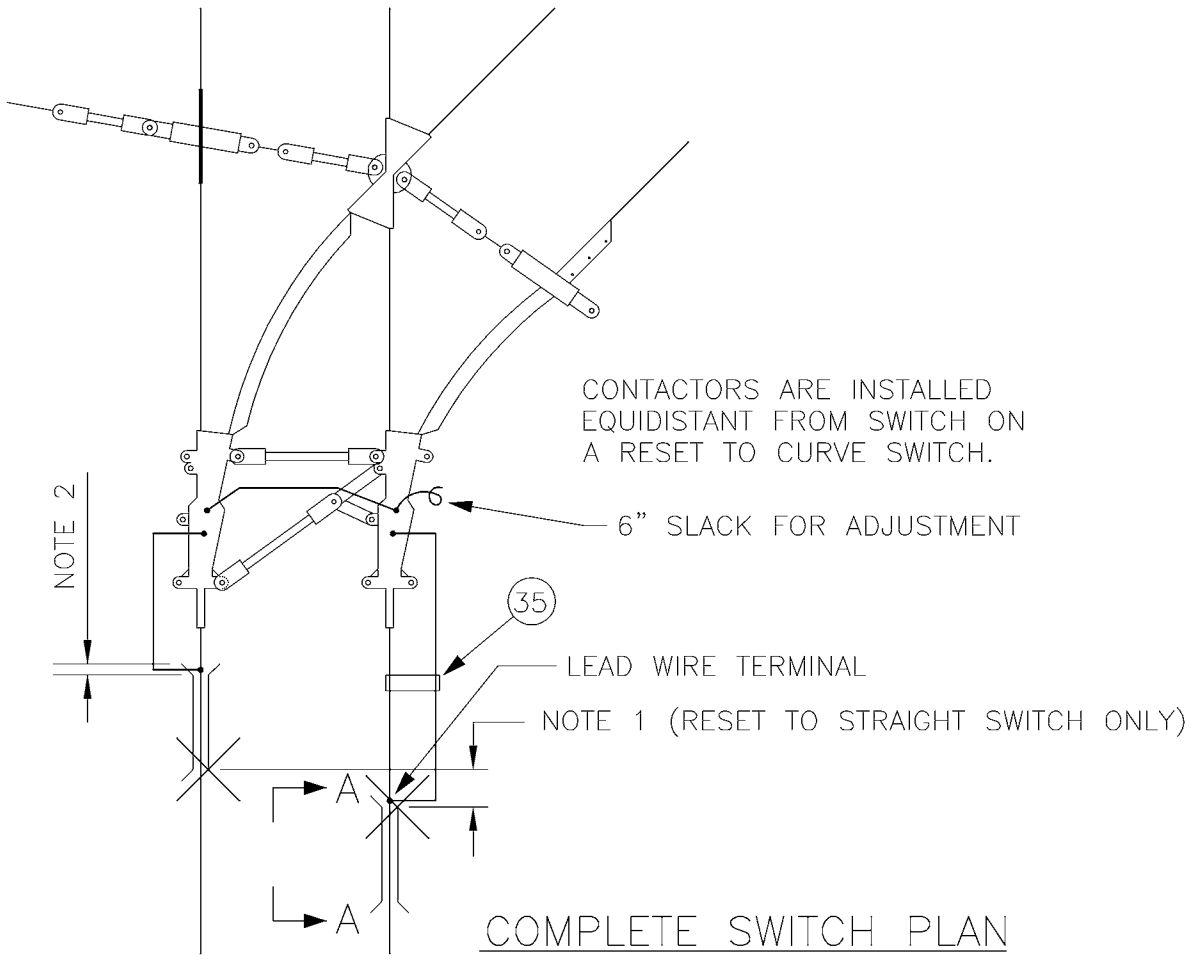

COMPLETE SWITCH PLAN

NOTES

1. PROVIDE A 4–1/2" INTERVAL BETWEEN OPPOSITE POLARITY CONTACTORS. MEASURE FROM POINT OF CONTACT WITH TROLLEY SHOE AND CONTACTOR.

2. PROVIDE A 1" OVERLAP BETWEEN CONTACTOR AND END OF SWITCH TROLLEY WIRE CLAMP.

MATERIAL LIST

ITEM #	QTY	DESCRIPTION	MANUFACTURER	CAT. NO.
35	AS REQD	CLAMP, INSUL LEAD WIRE	WABCO	19655–2000

DESIGNED DPG	CHKD: DOW	King County	DEPARTMENT OF TRANSPORTATION TROLLEY STANDARDS	DATE: JUN 95
DR: TMB	SCALE: NONE			FILE
RECOM.	CONTRACT:		OVERHEAD SPECIALWORK SWITCH CONTACTOR CONFIGURATION	DWG. NO. SA–163
APPROVED				SHT 1 OF 1

V:\Library & Standards\Standards\Trolley\Details\SA-161&163.dwg, SA-163, 1/5/2007 12:19:00 PM

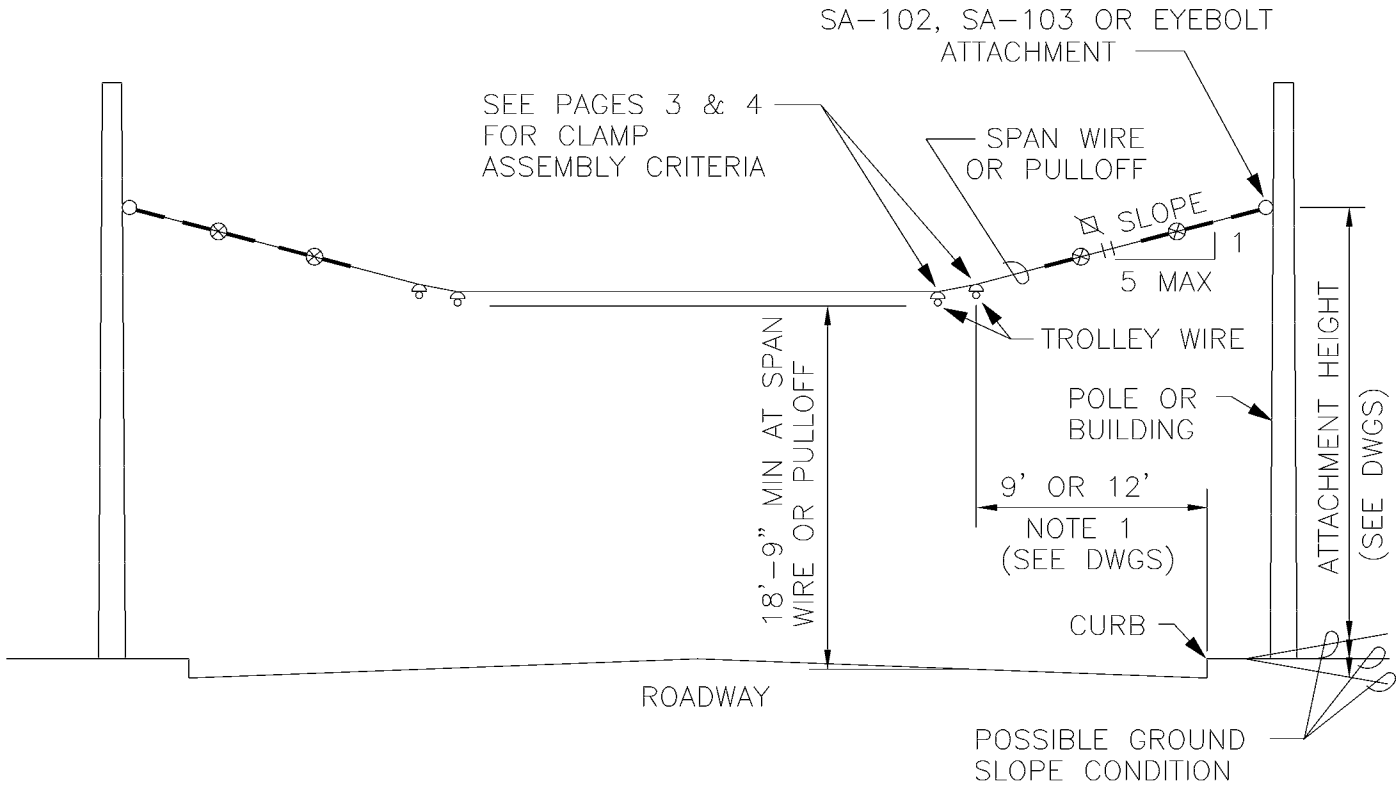

TWO–WAY TANGENT SPAN

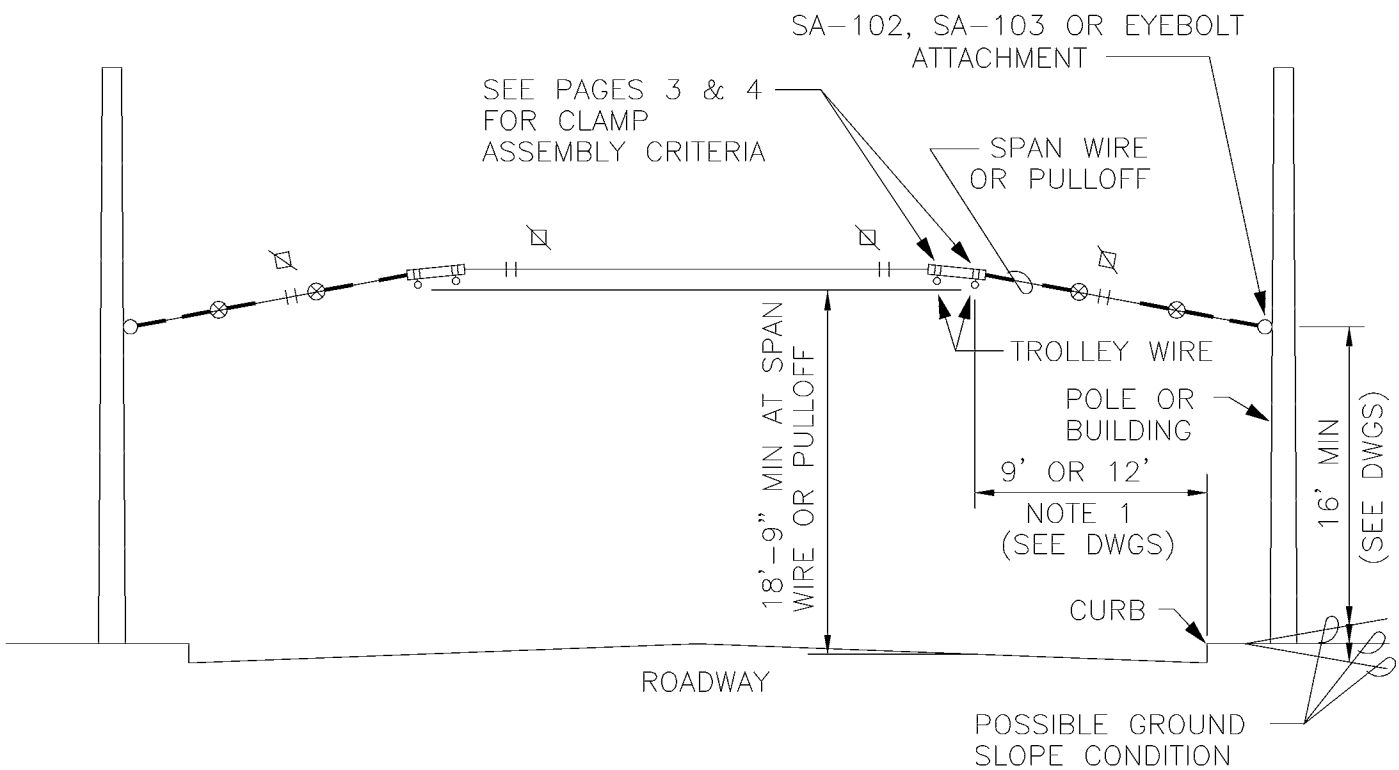

TWO–WAY INVERTED SPAN

DESIGNED DPG	CHKD: DPG	King County	DEPARTMENT OF TRANSPORTATION TROLLEY STANDARDS	DATE: MARCH 00
DR: DOW	SCALE: 1"=10'			FILE
RECOM.	CONTRACT:		TROLLEY WIRE SUPPORT SPAN ATTACHMENT CRITERIA	DWG. NO. SA–164
APPROVED				SHT 1 OF 4

V:\Library & Standards\Standards\Trolley\Details\SA-164.1-4.dwg, SA-164.1, 1/5/2007 12:19:08 PM

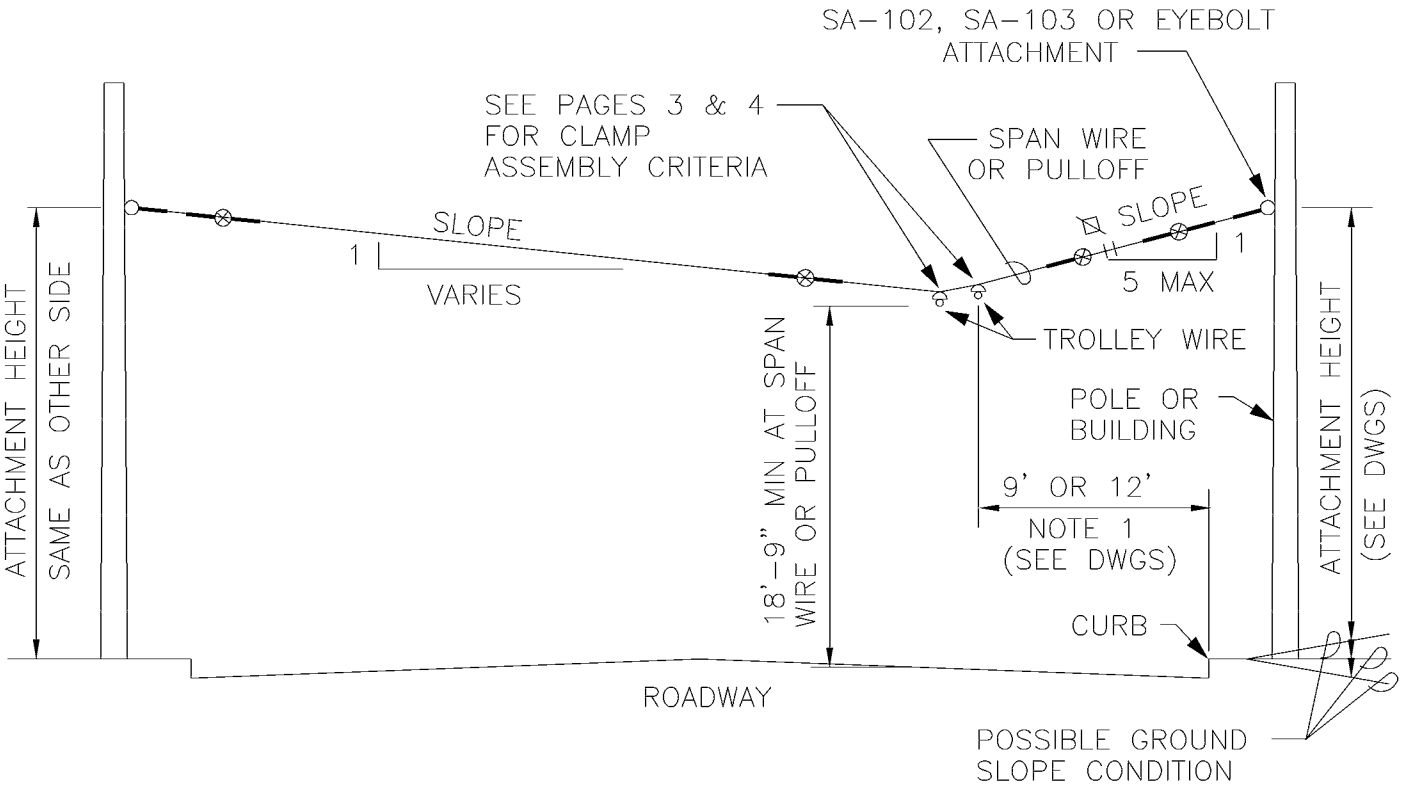

ONE–WAY TANGENT SPAN

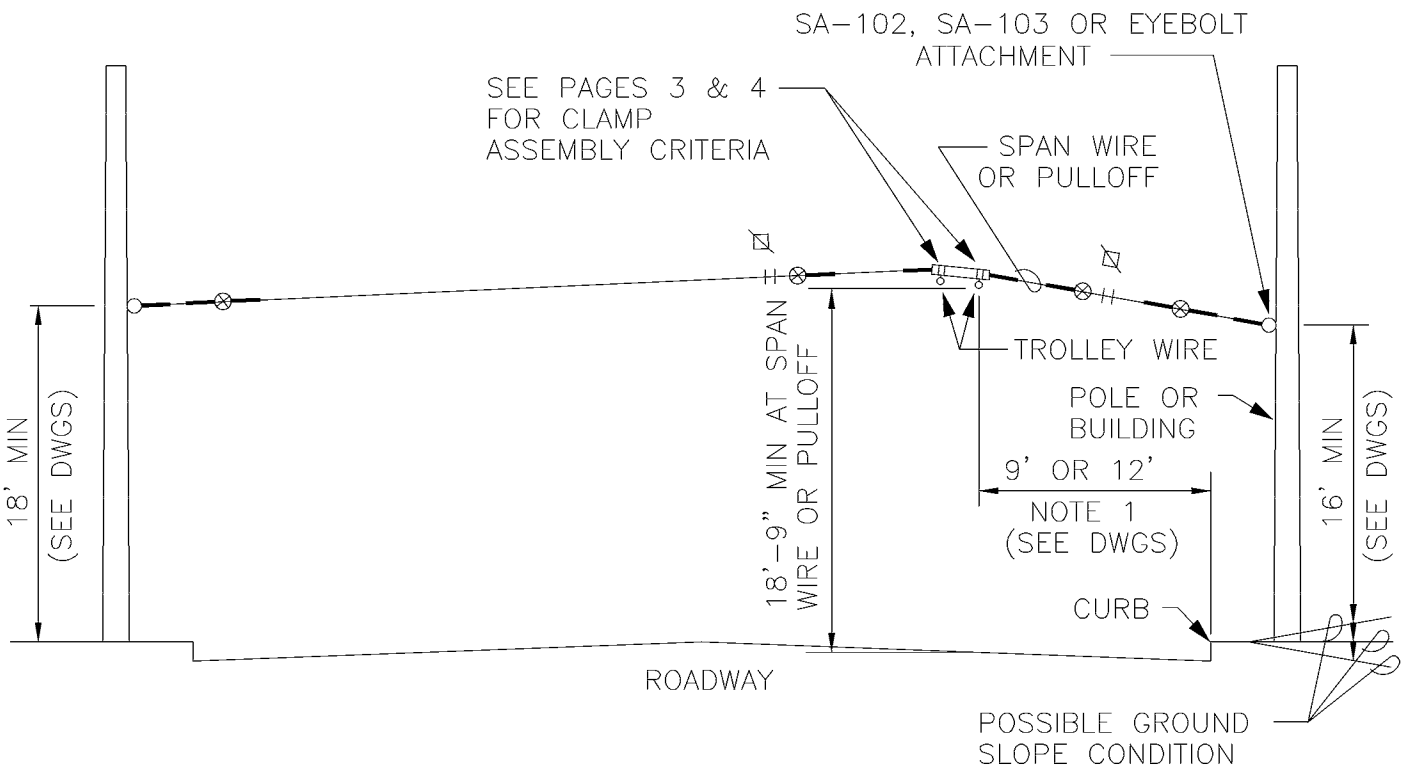

ONE–WAY INVERTED SPAN

DESIGNED DPG	CHKD: DPG	King County	DEPARTMENT OF TRANSPORTATION TROLLEY STANDARDS	DATE: MAR 00
DR: DOW	SCALE: 1"=10'			FILE
RECOM.	CONTRACT:		TROLLEY WIRE SUPPORT SPAN ATTACHMENT CRITERIA	DWG. NO. SA–164
APPROVED				SHT 2 OF 4

V:\Library & Standards\Standards\Trolley\Details\SA-164.1-4.dwg, SA-164.2, 1/5/2007 12:19:14 PM

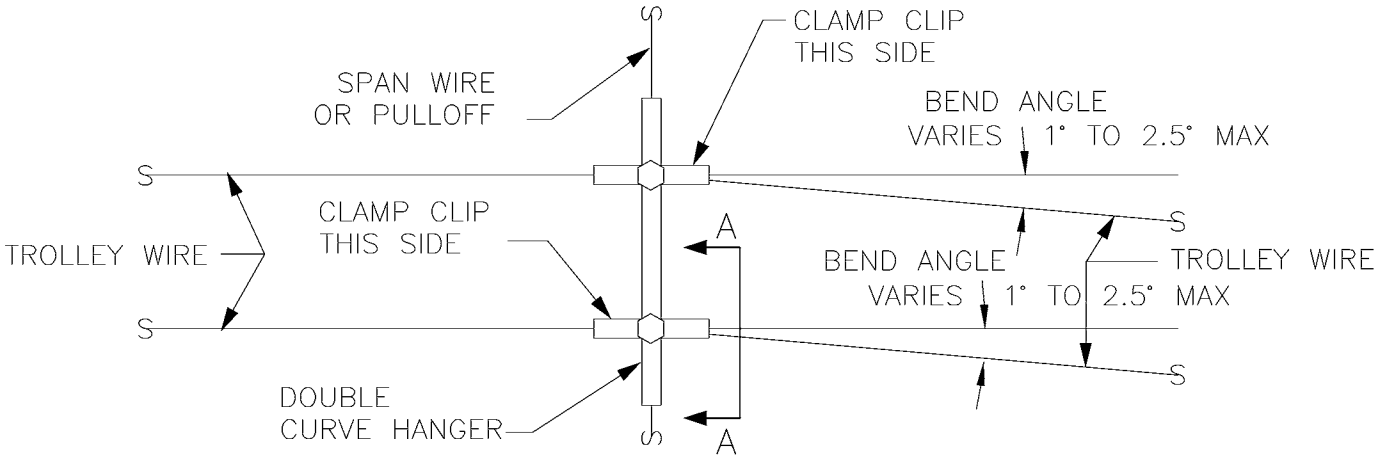

DOUBLE CURVE HANGER SPAN

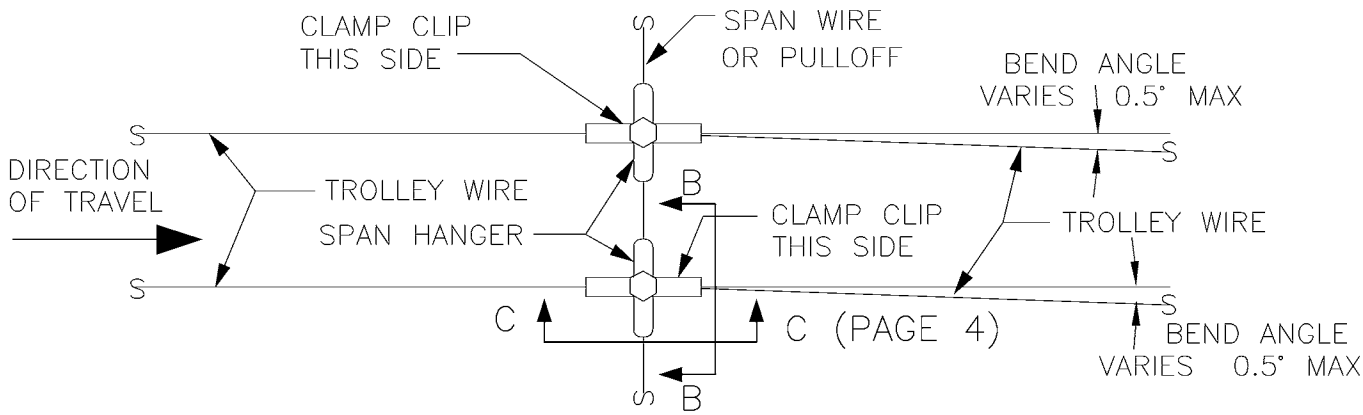

TANGENT SPAN WITH CURVATURE

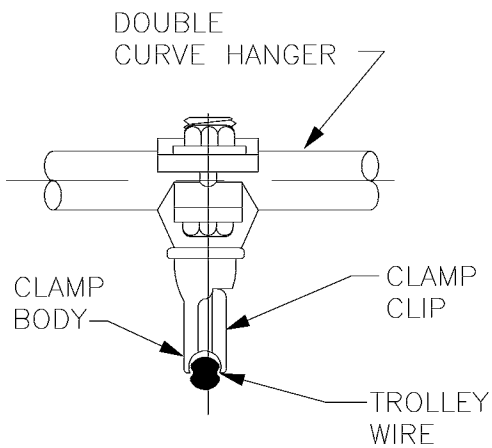

A–A

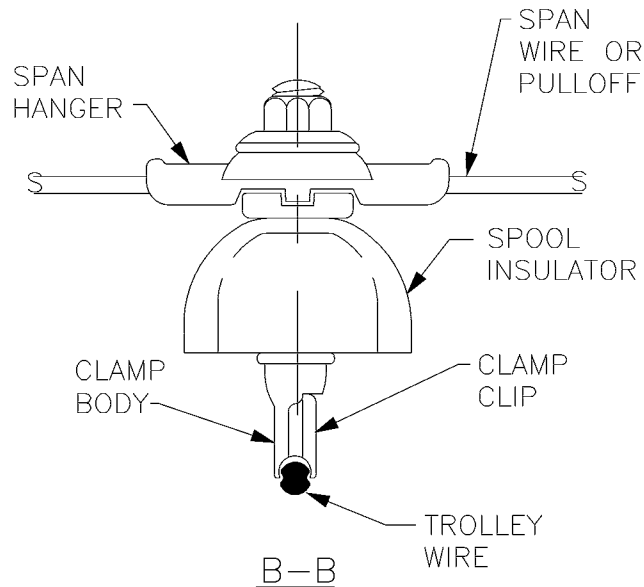

B–B

CLAMP ASSEMBLY CRITERIA

DESIGNED DPG	CHKD: DOW	King County	DEPARTMENT OF TRANSPORTATION TROLLEY STANDARDS	DATE: OCT 95
DR: TMB	SCALE: NONE			FILE
RECOM.	CONTRACT:		TROLLEY WIRE SUPPORT SPAN ATTACHMENT CRITERIA	DWG. NO. SA–164
APPROVED				SHT 3 OF 4

V:\Library & Standards\Standards\Trolley\Details\SA-164.1-4.dwg, SA-164.3, 1/5/2007 12:19:20 PM

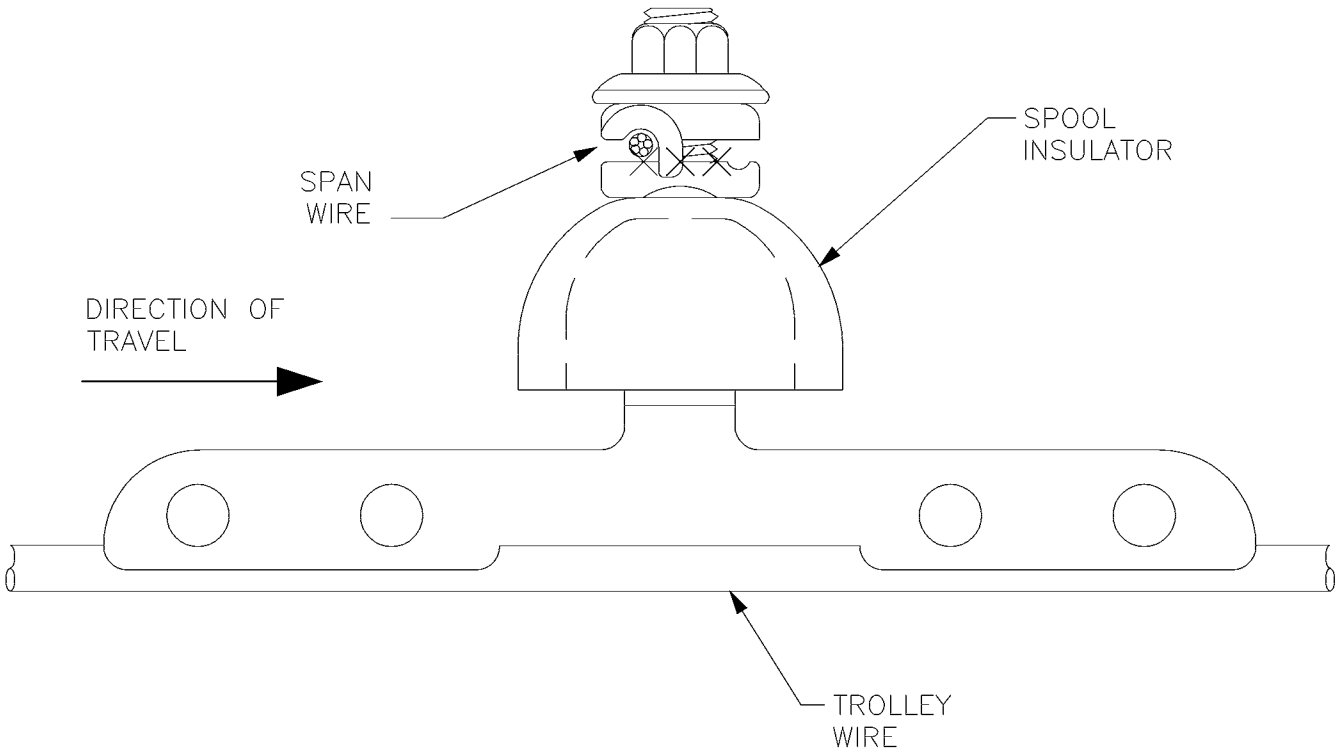

C—C

NOTES

1. 9' IS NORMAL FOR EXTENDED ZONES OF TANGENT SPANS WHERE NO PARKING IS ALLOWED. 12' IS NORMAL FOR EXTENDED ZONES OF TANGENT SPANS WHERE PARKING IS ALLOWED.

DESIGNED DPG	CHKD: DOW	King County	DEPARTMENT OF TRANSPORTATION TROLLEY STANDARDS	DATE: JUN 95
DR: TMB	SCALE: NONE			FILE
RECOM.	CONTRACT:		TROLLEY WIRE SUPPORT SPAN ATTACHMENT CRITERIA	DWG. NO. SA—164
APPROVED				SHT 4 OF 4

V:\Library & Standards\Standards\Trolley\Details\SA-164.1-4.dwg, SA-164.4, 1/5/2007 12:19:26 PM

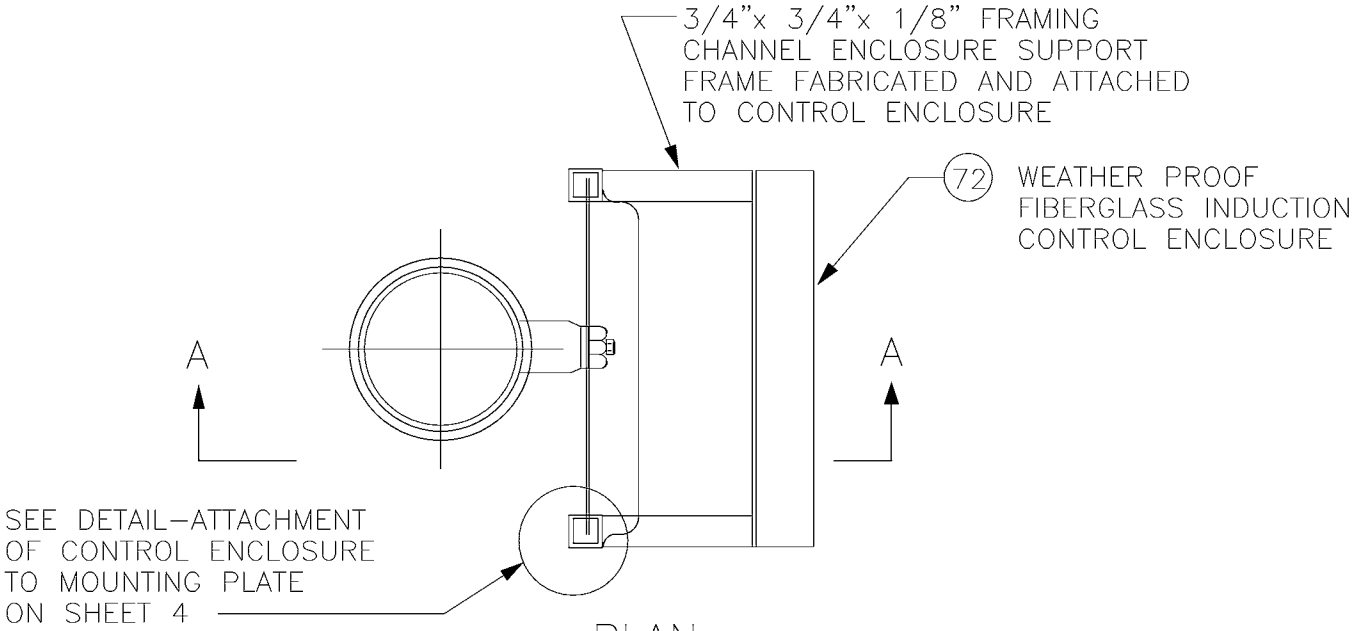

PLAN

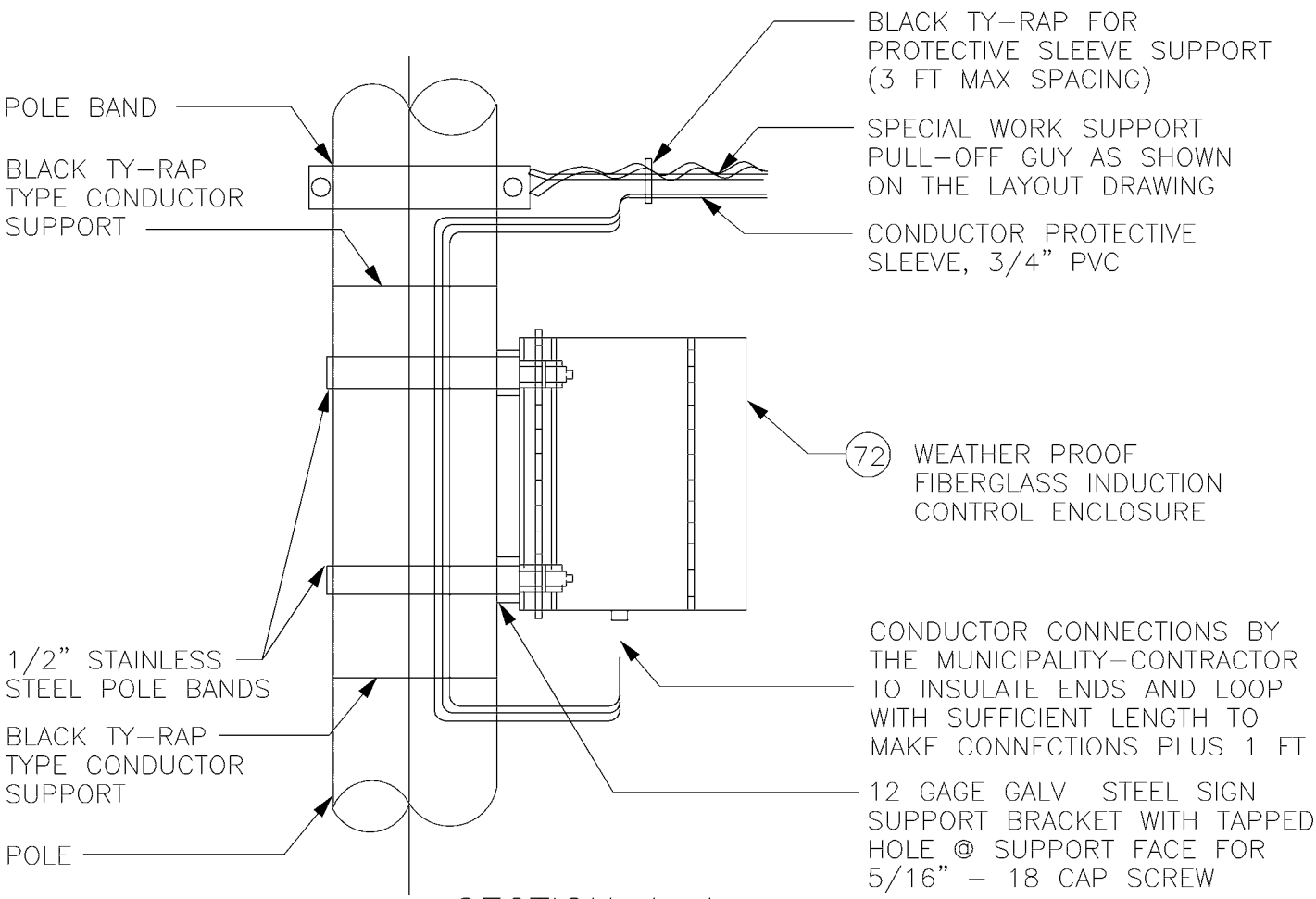

SECTION A–A

INDUCTION CONTROL ENCLOSURE POLE ASSEMBLY

DESIGNED DPG	CHKD: DOW	King County	DEPARTMENT OF TRANSPORTATION TROLLEY STANDARDS	DATE: OCT 95
DR: CMS	SCALE: NONE		FROG INDUCTION CONTROL SYSTEM	FILE
RECOM.	CONTRACT:			DWG. NO. SA–165
APPROVED				SHT 1 OF 6

V:\Library & Standards\Standards\Trolley\Details\SA-165.1-6.dwg, SA-165.1, 1/5/2007 12:19:35 PM

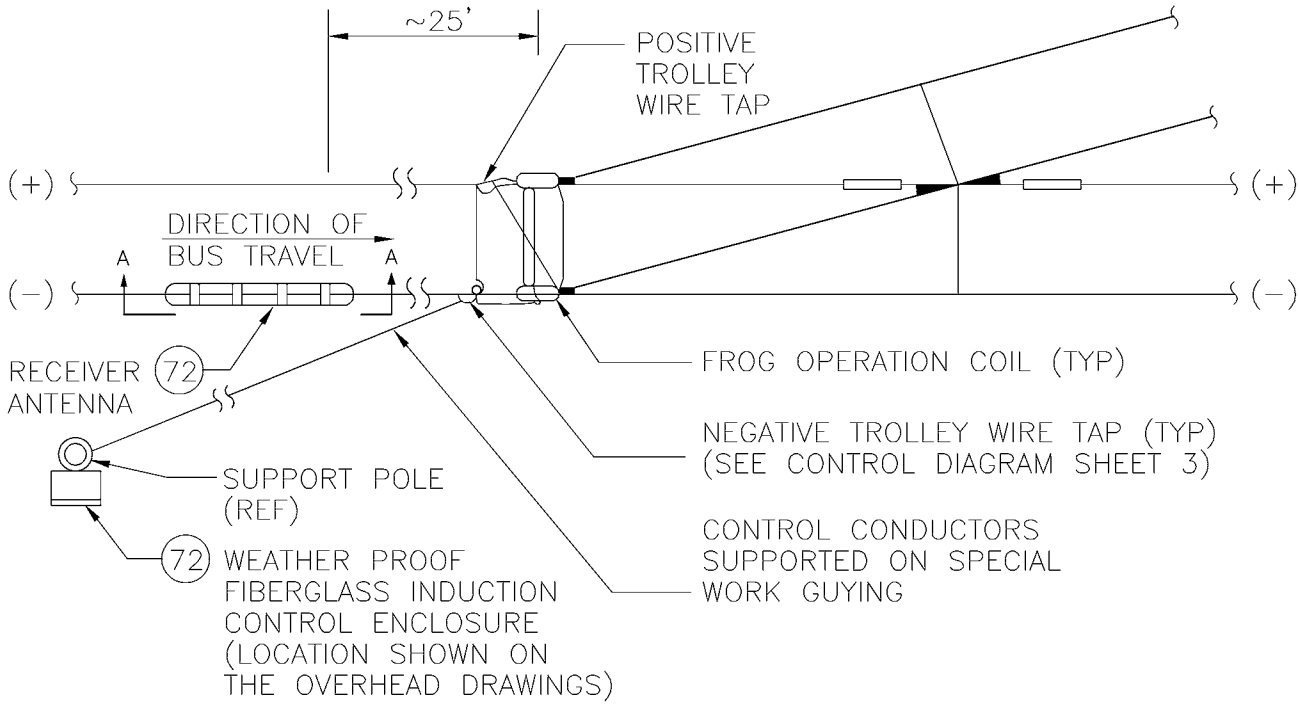

FROG INDUCTION CONTROL ASSEMBLY PLAN

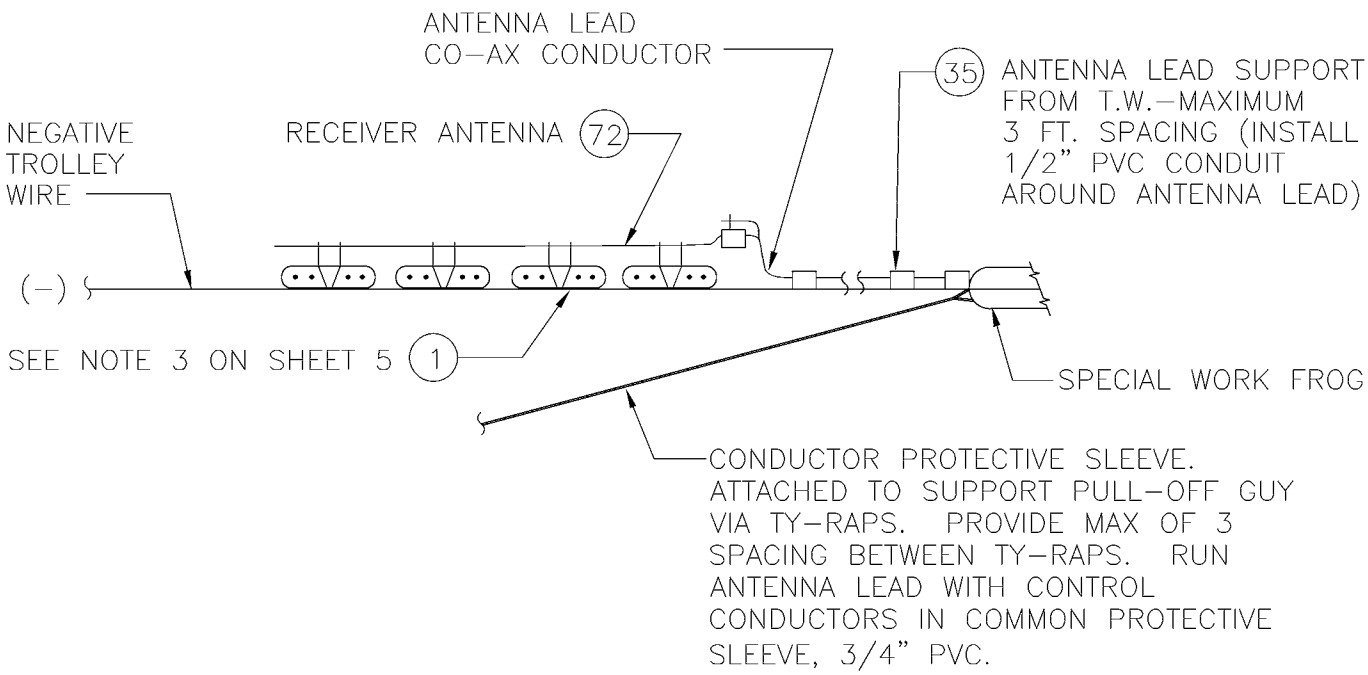

SECTION A−A

DESIGNED DPG	CHKD: DOW	King County	DEPARTMENT OF TRANSPORTATION TROLLEY STANDARDS	DATE: OCT 95
DR: CMS	SCALE: NONE			FILE
RECOM.	CONTRACT:		FROG INDUCTION CONTROL SYSTEM	DWG. NO. SA−165
APPROVED				SHT 2 OF 6

V:\Library & Standards\Standards\Trolley\Details\SA-165.1-6.dwg, SA-165.2, 1/5/2007 12:19:42 PM

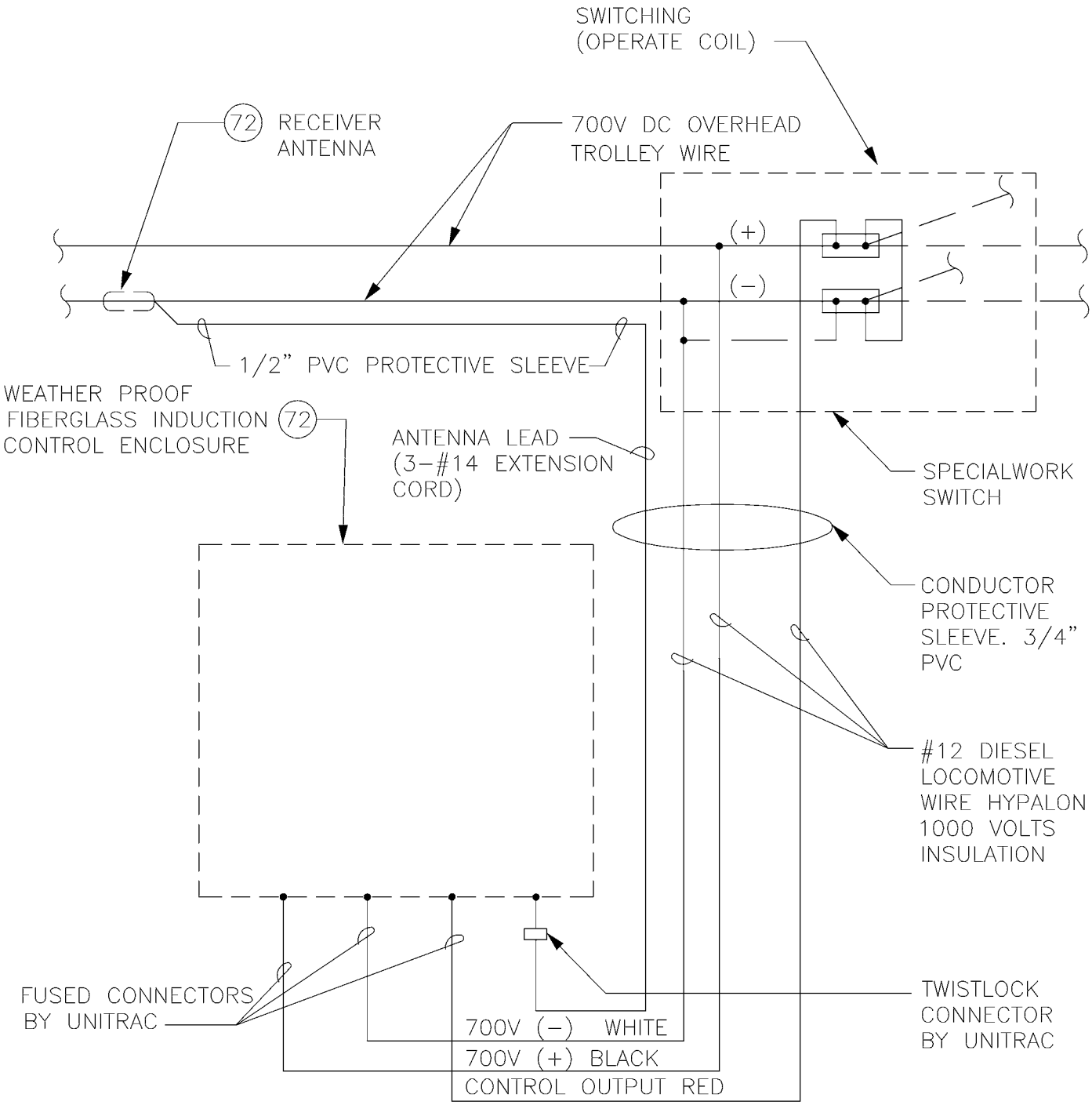

INDUCTION SYSTEM CONTROL DIAGRAM

NOTES:

ALL CONNECTIONS AT ANTENNA, SWITCH AND CONTROL BOX BY THE MUNICIPALITY.

DESIGNED DPG	CHKD: DOW	King County	DEPARTMENT OF TRANSPORTATION TROLLEY STANDARDS	DATE: OCT 95
DR: CMS	SCALE: NONE			FILE
RECOM.	CONTRACT:		FROG INDUCTION CONTROL SYSTEM	DWG. NO. SA−165
APPROVED				SHT 3 OF 6

V:\Library & Standards\Standards\Trolley\Details\SA-165.1-6.dwg, SA-165.3, 1/5/2007 12:19:47 PM

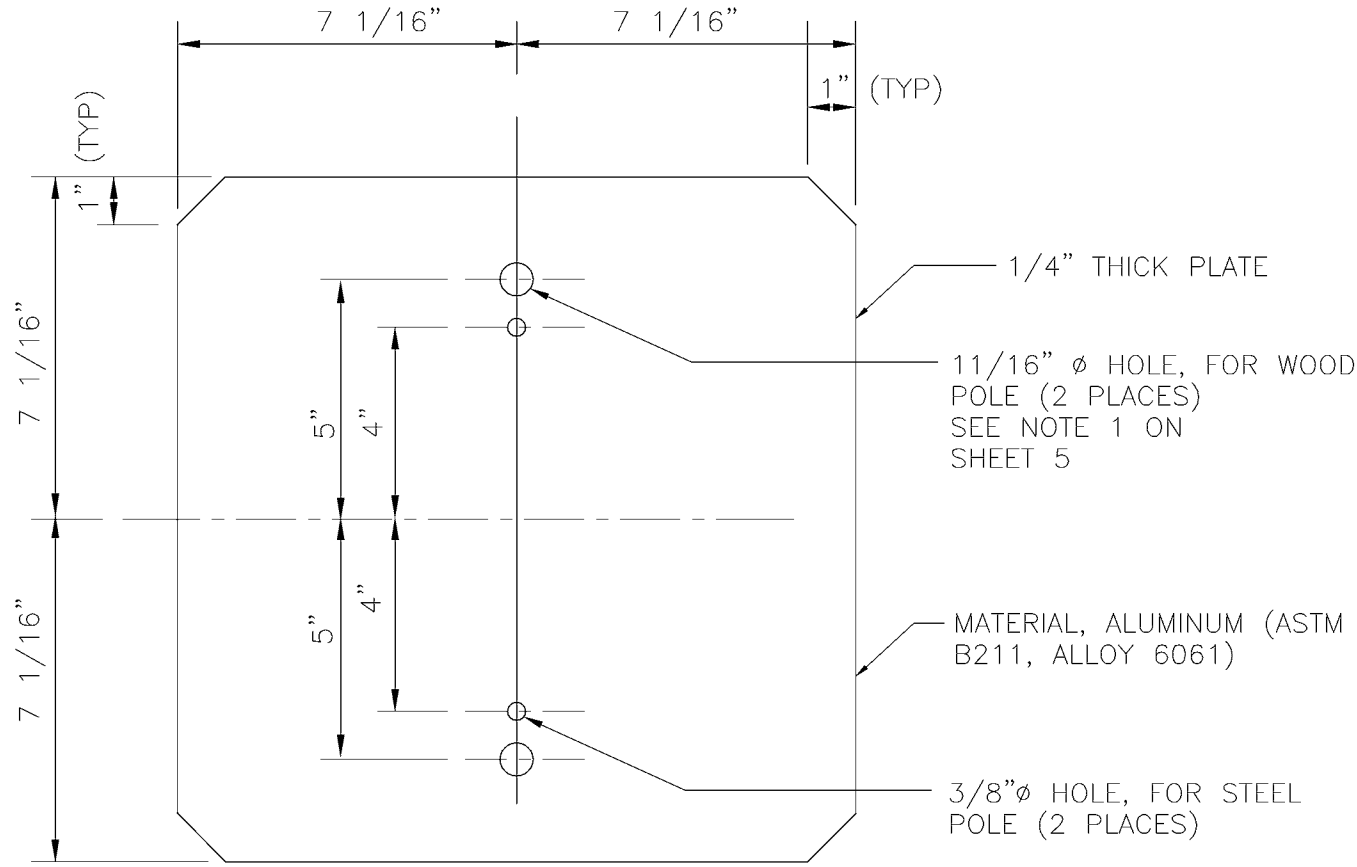

ALUMINUM MOUNTING PLATE DETAIL

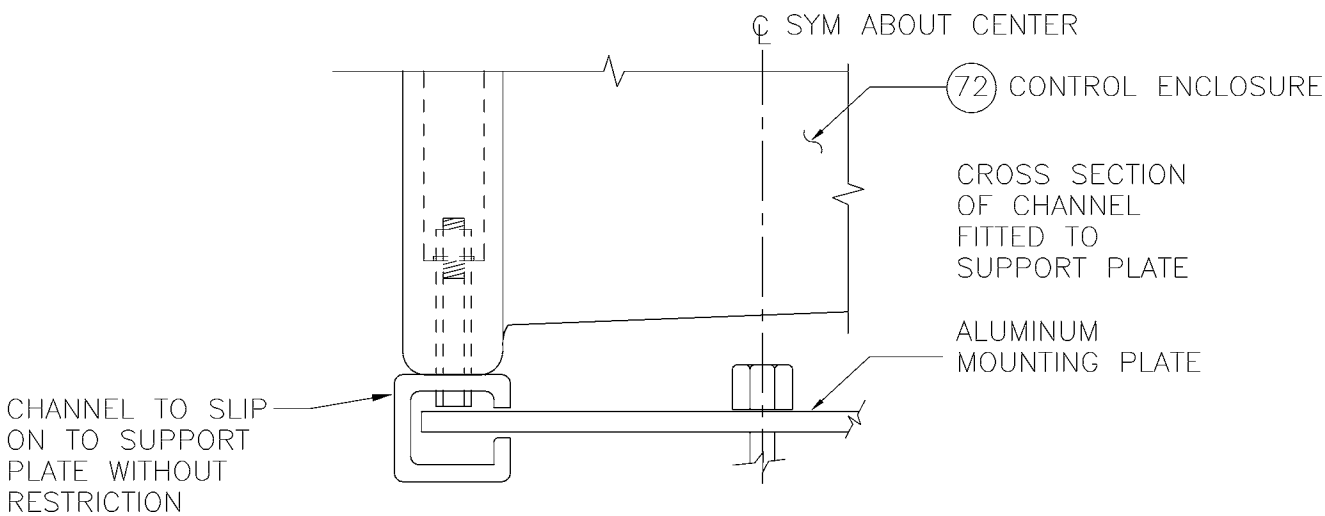

DETAIL—ATTACHMENT OF CONTROL ENCLOSURE TO MOUNTING PLATE

DESIGNED DPG	CHKD: DOW	King County	DEPARTMENT OF TRANSPORTATION TROLLEY STANDARDS	DATE: OCT 95
DR: CMS	SCALE: NONE			FILE
RECOM.	CONTRACT:		FROG INDUCTION CONTROL SYSTEM	DWG. NO. SA—165
APPROVED				SHT 4 OF 6

V:\Library & Standards\Standards\Trolley\Details\SA-165.1-6.dwg, SA-165.4, 1/5/2007 12:19:53 PM

GENERAL NOTES

1. WHERE THE SUPPORT POLE IS WOOD, THE CONTROL ENCLOSURE MOUNTING PLATE SHALL BE ATTACHED DIRECTLY TO THE POLE BY MEANS OF ONE HOT-DIP GALVANIZED 5/8-INCH DIAMETER HEX HEAD THROUGH BOLT WITH ATTACHMENT NUT AND WASHER MOUNTED THROUGH THE TOP HOLE OF THE SUPPORT PLATE AND ONE HOT-DIP GALVANIZED 5/8-INCH BY 6-INCH GIMLET POINT HEX HEAD LAG SCREW MOUNTED THROUGH THE BOTTOM HOLE OF THE SUPPORT PLATE.

2. THE CONTROL ENCLOSURE SHALL BE LOCATED IN PROXIMITY OF THE PULL-OFF CABLE ATTACHMENTS AT THE SUPPORT POLE. THE ENCLOSURE SHALL, AS PRACTICAL, BE LOCATED AT THE SIDE OF THE POLE FACING THE CURB. THE ENCLOSURE MAY BE INSTALLED EITHER ABOVE OR BELOW THE PULL-OFF GUY CABLE ATTACHMENT AT THE POLE, AS SUITABLE, TO PREVENT CONFLICT WITH OTHER ATTACHMENTS TO THE POLE. THE ENCLOSURE SHALL BE SO LOCATED ON THE POLE THAT CONFLICTS WILL NOT BE INTRODUCED TO ACCESSIBILITY OF EXISTING UTILITIES AND POLE CLIMBING SPACES. ON JOINT USE POLES HAVING A CROSS-ARM, THE ENCLOSURE SHALL BE MOUNTED ON THE CROSS-ARM TO PREVENT CONFLICT WITH CLIMBING SPACE. WHERE A JOINT USE POLE IS WITHOUT A CROSS-ARM, THE CONTRACTOR SHALL COORDINATE ENCLOSURE MOUNTING SPACE SITH THE JOINT USE OWNERS OF THE POLE.

3. THE HOLES FORMED IN THE ANTENNA WEB FOR MOUNTING OF THE ANTENNA MAY BE ENLARGED TO ACCOMMODATE THE 5/8-INCH DIAMETER BOLTS REQUIRED FOR ANTENNA ATTACHMENT TO THE SUPPORTING TROLLEY WIRE CLAMPS.

MATERIAL LIST

ITEM #	QTY	DESCRIPTION	MANUFACTURER	CAT. NO.
01	4	DETROIT CLAMP ASSY	WABCO	19293-3007
35	AS REQD	CLAMP, INSUL LEAD WIRE	WABCO	19655-2000
72	1	INDUCTIVE CONTROL SYSTEM RECEIVER	UNITRAC	320100-16X
07	1	INDUCTIVE CONTROL SYSTEM ANTENNA	UNITRAC	320310-4X

DESIGNED DPG	CHKD: DOW	King County	DEPARTMENT OF TRANSPORTATION TROLLEY STANDARDS	DATE: OCT 95
DR: CMS	SCALE: NONE			FILE
RECOM.	CONTRACT:		FROG INDUCTION CONTROL SYSTEM	DWG. NO. SA-165
APPROVED				SHT 5 OF 6

V:\Library & Standards\Standards\Trolley\Details\SA-165.1-6.dwg, SA-165.5, 1/5/2007 12:19:58 PM

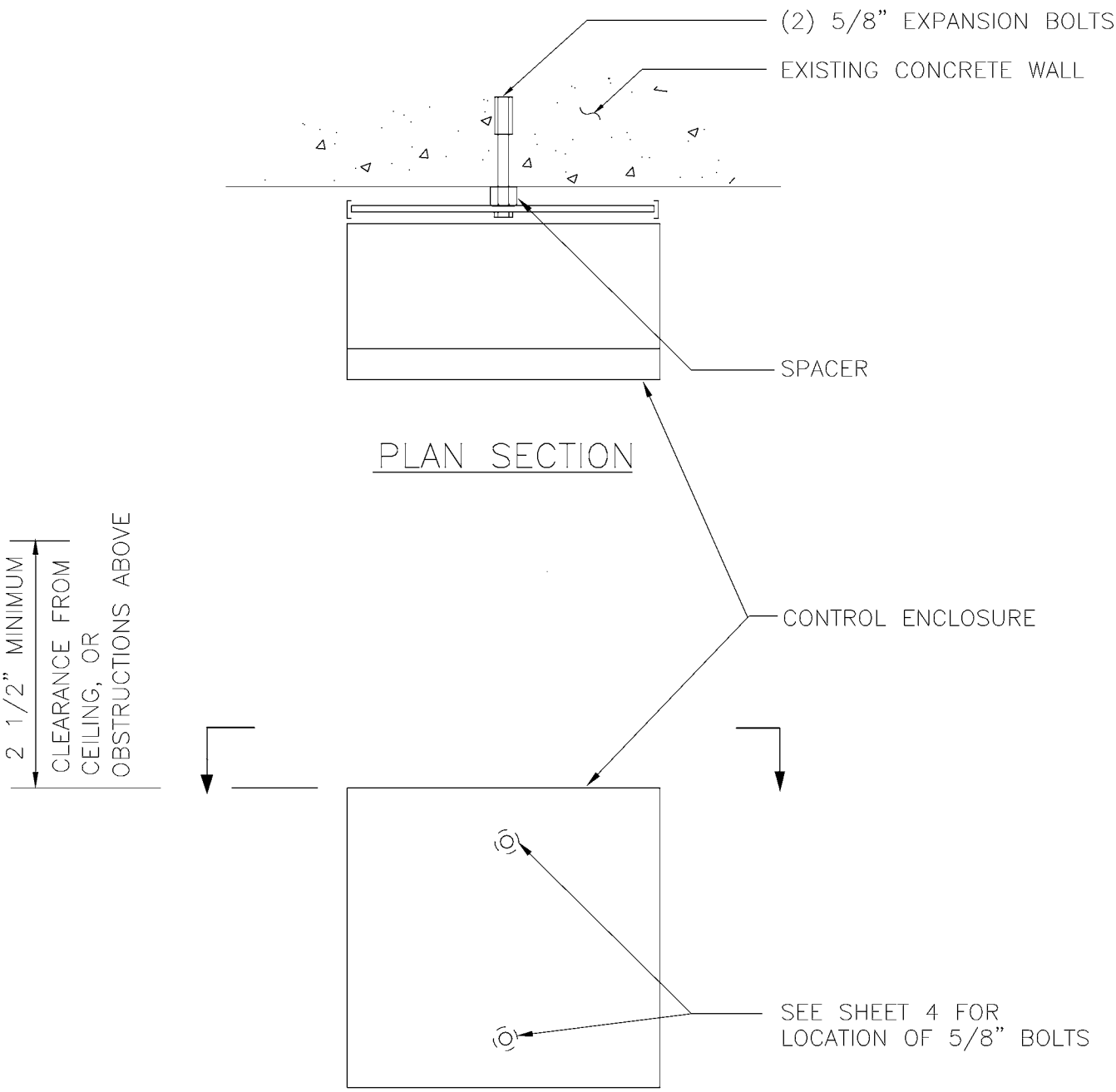

ELEVATION

INSTALLATION ON EXISTING CONCRETE OR MASONRY WALL

V:\Library & Standards\Standards\Trolley\Details\SA-165.1-6.dwg, SA-165.6, 1/5/2007 12:20:03 PM

DESIGNED DPG	CHKD: DOW	King County	DEPARTMENT OF TRANSPORTATION TROLLEY STANDARDS	DATE: OCT 95
DR: CMS	SCALE: NONE			FILE
RECOM.	CONTRACT:		FROG INDUCTION CONTROL SYSTEM	DWG. NO. SA–165
APPROVED				SHT 6 OF 6

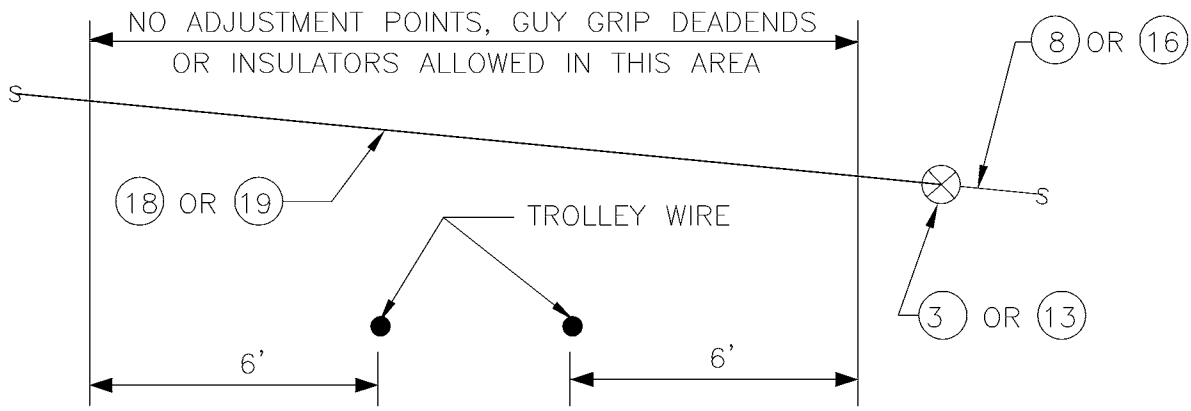

ELEVATION

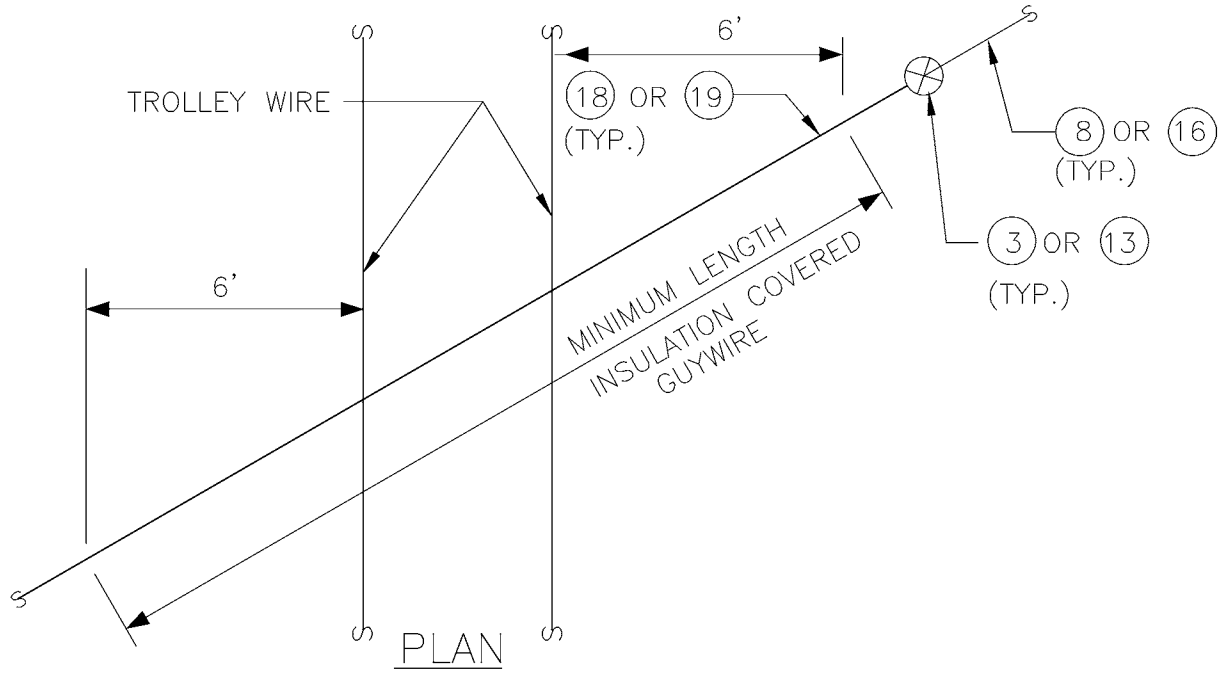

PLAN

NOTES:
1. THE ENGINEER SHALL CONCUR WITH ANY EXCEPTIONS TO THESE CRITERIA.

MATERIAL LIST

ITEM #	QTY	DESCRIPTION	MANUFACTURER	CAT. NO.
03	VARIES	GUY STRAIN INSUL	PORCELAIN PRODUCTS CO.	504
08	VARIES	GUY STRAND	COPPERWELD	8M
13	VARIES	GUY STRAIN INSUL	PORCELAIN PRODUCTS CO.	506
16	VARIES	GUY STRAND	COPPERWELD	16M
18	VARIES	GUY STRAND, COVERED	COPPERWELD	8MI
19	VARIES	GUY STRAND, COVERED	COPPERWELD	16MI

DESIGNED DPG	CHKD: DOW	King County	DEPARTMENT OF TRANSPORTATION TROLLEY STANDARDS	DATE: OCT 95
DR: TMB	SCALE: NONE			FILE
RECOM.	CONTRACT:		INSULATION COVERED GUY WIRE REQUIREMENT CRITERIA	DWG. NO. SA-167
APPROVED				SHT 1 OF 1

V:\Library & Standards\Standards\Trolley\Details\SA-167.dwg, SA-167, 1/5/2007 12:20:10 PM

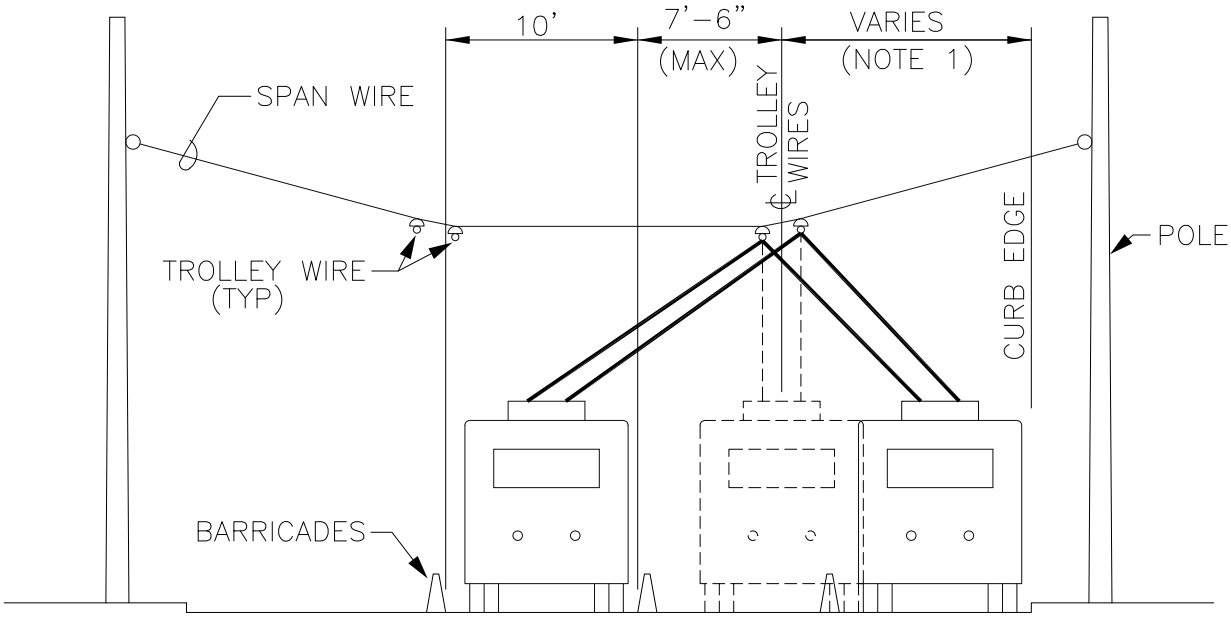

ELEVATION

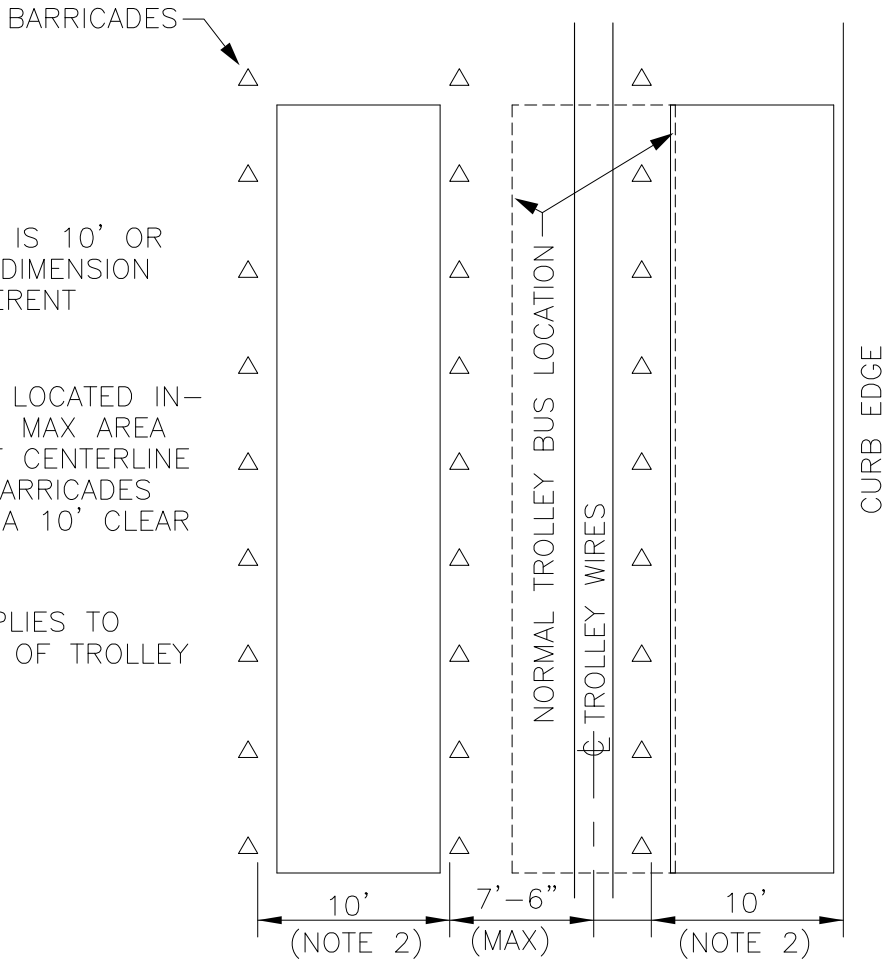

PLAN

NOTES:

1. NORMAL DIMENSION IS 10' OR 13', BUT EXISTING DIMENSION WILL VARY AT DIFFERENT LOCATIONS.
2. BARRICADES TO BE LOCATED INSIDE OF THE 7'-6" MAX AREA ON EITHER SIDE OF CENTERLINE TROLLEY WIRES. BARRICADES SHALL ALSO FORM A 10' CLEAR TRAVEL LANE.
3. THIS STANDARD APPLIES TO STRAIGHT SECTIONS OF TROLLEY WIRE ONLY.

DESIGNED: RR	CHKD: DPG	King County	DEPARTMENT OF TRANSPORTATION TROLLEY STANDARDS	DATE: NOV 93
DR: DOW	SCALE: 1"=10'			FILE
RECOM.	CONTRACT:		TROLLEY COACH TRAVEL AREA IN CONSTRUCTION ZONE	DWG. NO. SA-170
APPROVED				SHT 1 OF 1

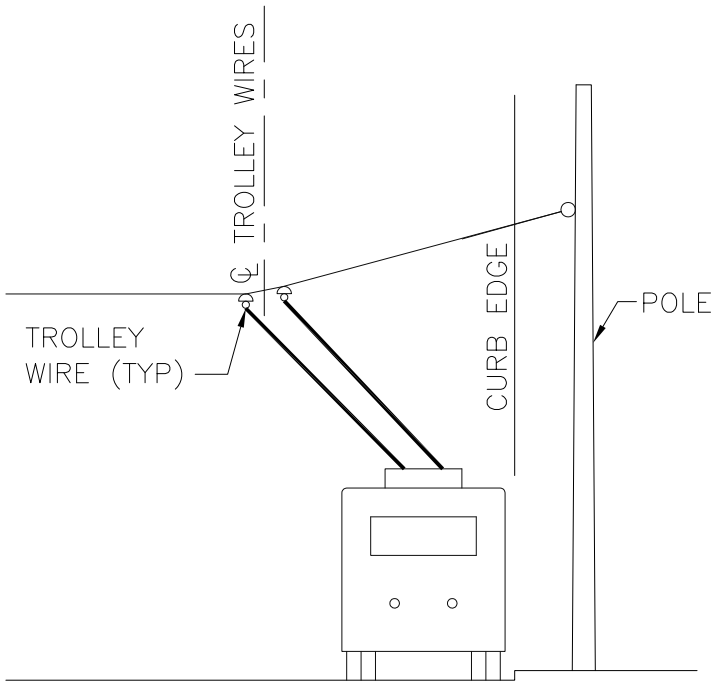

POLE SPAN SUPPORT

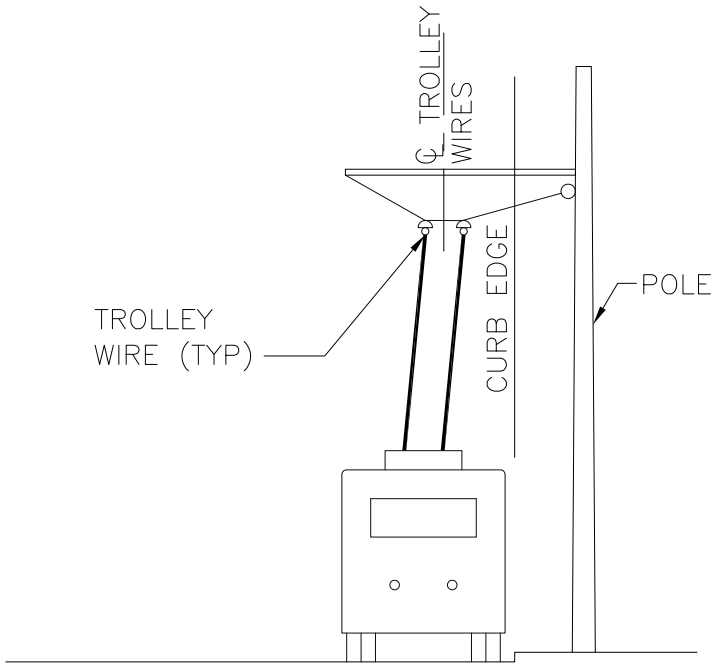

MAST ARM SUPPORT

DESIGNED AW	CHKD: AW	King County	DEPARTMENT OF TRANSPORTATION TROLLEY STANDARDS TROLLEY COACH ELEVATION VIEW WITH SPANS OR MAST ARM	DATE: FEB 08
DR: BFB	SCALE: 1"=10'			FILE
RECOM.	CONTRACT:			DWG. NO. SA-171
APPROVED				SHT 1 OF 1

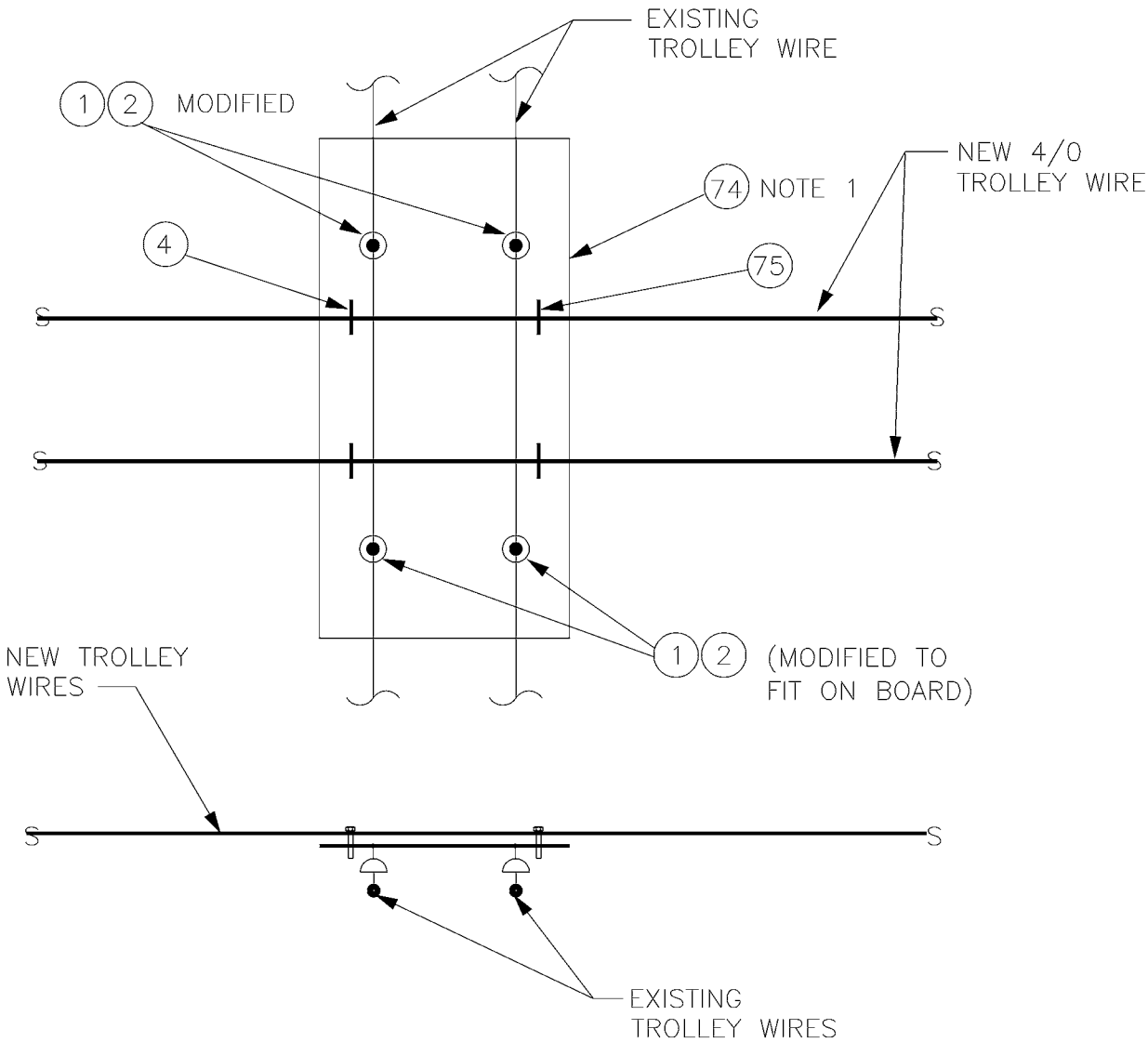

NOTES:

1. 4' x 8' SIZE IS A MINIMUM. USE 2 OR MORE WHEN REQUIRED.

MATERIAL LIST

ITEM #	QTY	DESCRIPTION	MANUFACTURER	CAT. NO.
01	4	DETROIT CLAMP ASSY	WABCO	19293-3007
02	4	AGC TANGENT SPAN HANGER	WABCO	19360-2000
74	1	4' X 8' X 1/2" EXTERIOR PLYWOOD		
75	4	U BOLT, FOR 4/0 TROLLEY WIRE		

DESIGNED DOW	CHKD: DPG	King County	DEPARTMENT OF TRANSPORTATION TROLLEY STANDARDS	DATE: JUN 95
DR: TMB	SCALE: NONE			FILE
RECOM.	CONTRACT:		TEMPORARY INSULATION BOARD	DWG. NO. SA-190
APPROVED				SHT 1 OF 1

V:\Library & Standards\Standards\Trolley\Details\SA-190.dwg, SA-190, 1/5/2007 12:20:23 PM

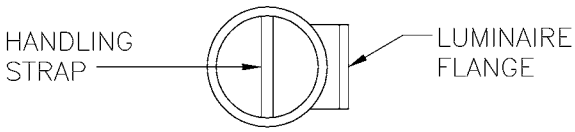

POLE TOP VIEW
(ENLARGED)

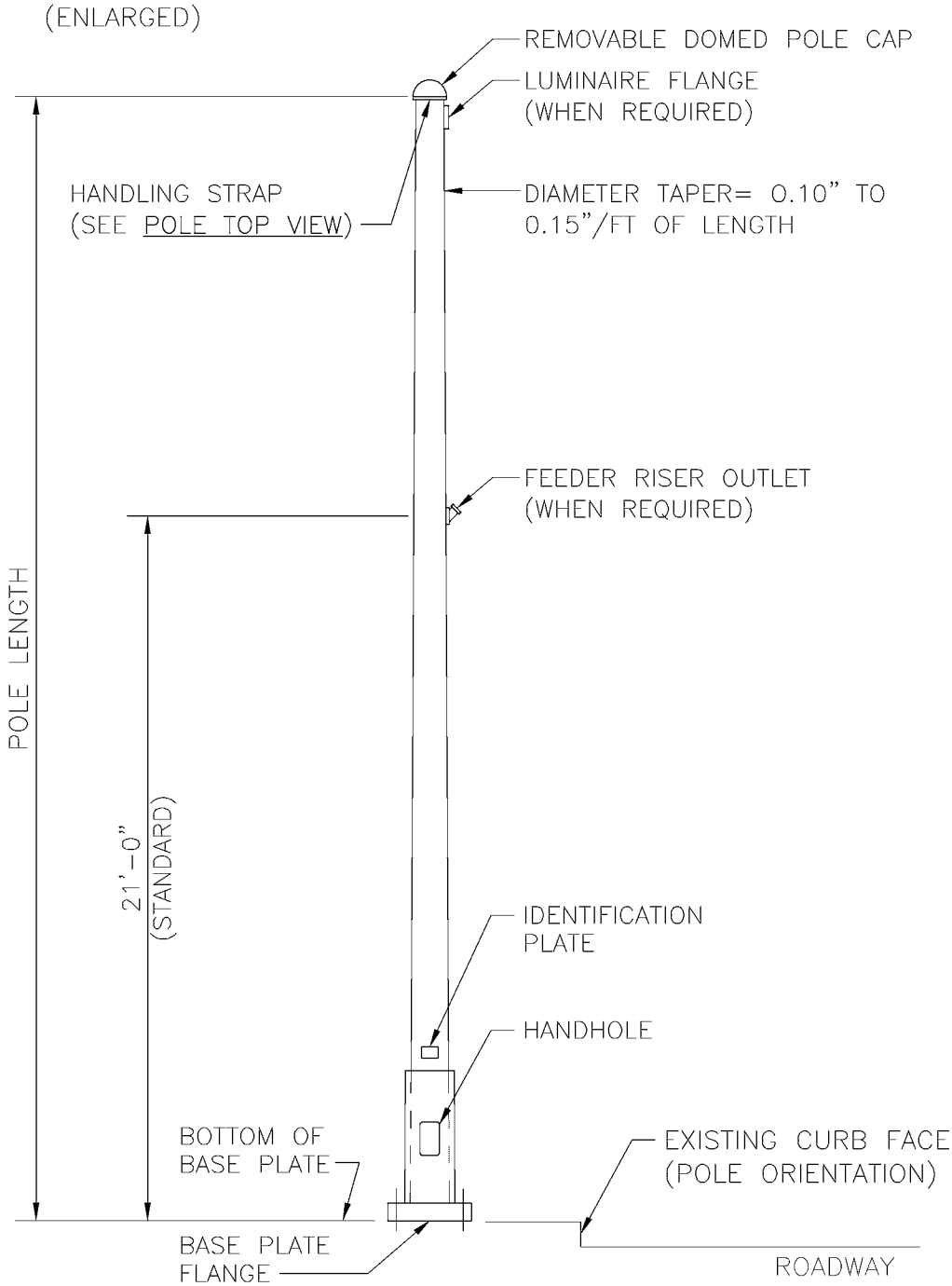

ANCHOR BASE STEEL POLE

DESIGNED DPG	CHKD: DOW	King County	DEPARTMENT OF TRANSPORTATION TROLLEY STANDARDS	DATE: JAN 97
DR: TMB	SCALE: NTS			FILE
RECOM.	CONTRACT:		STANDARD STEEL POLE	DWG. NO. SA-201
APPROVED				SHT 1 OF 4

V:\Library & Standards\Standards\Trolley\Details\SA-201.1-4.dwg, SA-201-1, 1/5/2007 12:20:29 PM

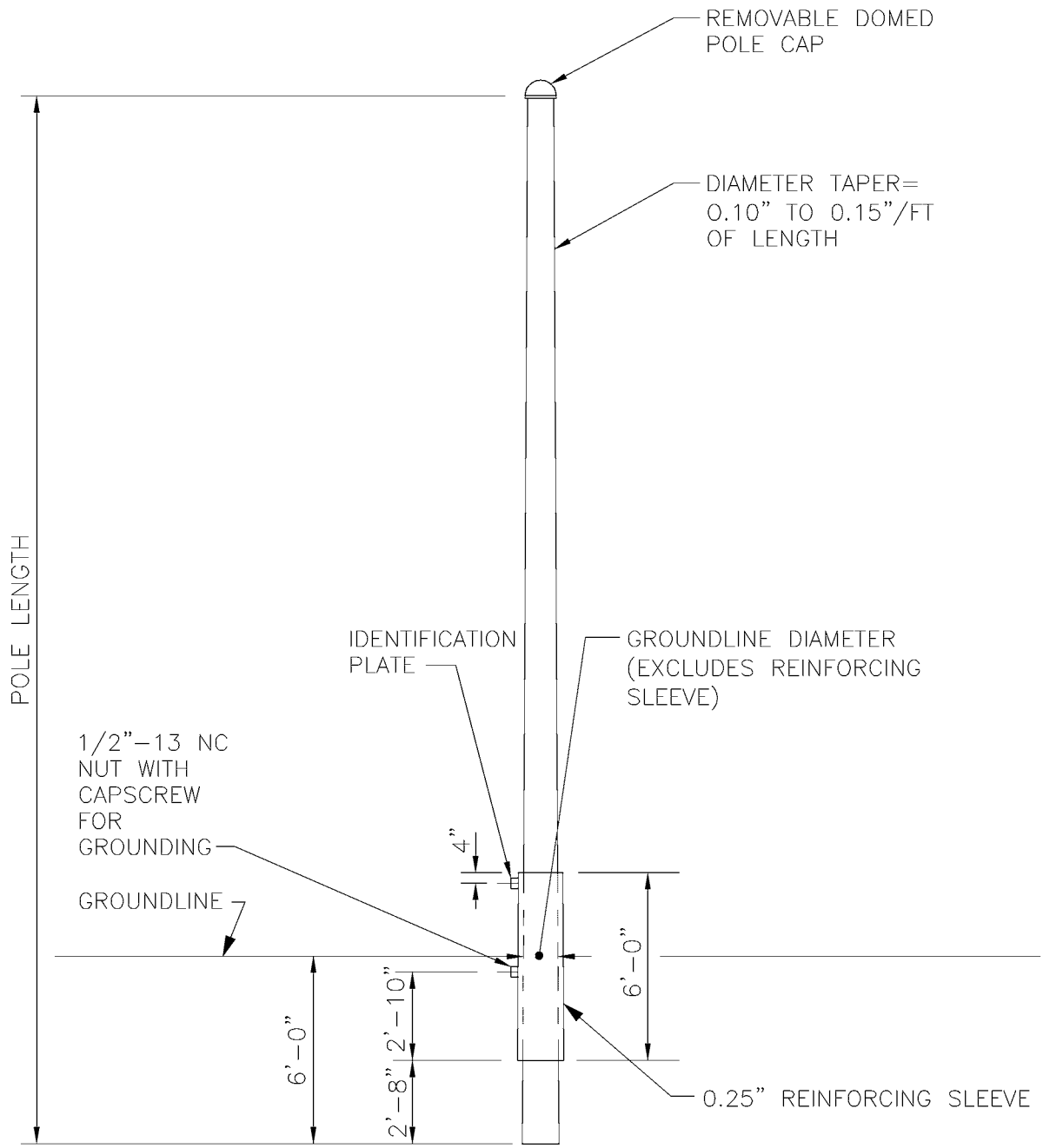

EMBEDDED STEEL POLE

DESIGNED DPG	CHKD: DOW	King County	DEPARTMENT OF TRANSPORTATION TROLLEY STANDARDS	DATE: JAN 97
DR: TMB	SCALE: NTS			FILE
RECOM.	CONTRACT:		STANDARD STEEL POLE	DWG. NO. SA-201
APPROVED				SHT 2 OF 4

V:\Library & Standards\Standards\Trolley\Details\SA-201.1-4.dwg, SA-201-2, 1/5/2007 12:20:34 PM

POLE SCHEDULE OF ALLOWABLE LOADS

ALLOWABLE TROLLEY OVERHEAD LOADS ON POLES AT 60° F WITH TROLLEY WIRE TENSION = 2000 LB. (EQUIVALENT HORIZONTAL LOAD IS APPLIED AT 25 FT)

	ALLOWABLE LOADS				REFERENCE DATA				
	POLE USERS: TOH/LIGHT		POLE USERS: TOH/LIGHT/TRAFFIC						
POLE TYPE	GROUND LINE MOMENT (LB–FT) (NOTE 1)	EQUIVALENT LOAD (LB)	GROUND LINE MOMENT (LB–FT) (NOTE 1,2)	EQUIVALENT LOAD (LB)	POLE STYLE	STANDARD LENGTH (FEET)	GRD LINE DIA (IN)	GROUND LINE YIELD MOMENT (LB–FT)	POLE FOUNDATION TYPE
SA–201H	40,000	1600	10,000	400	EMBEDDED	35	12	100,000	SA–212B
SA–201K	80,000	3200	50,000	2000			14	180,000	SA–212D
SA–201M	155,000	6200	125,000	5000			15	330,000	SA–212F
SA–201V	40,000	1600	10,000	400	ANCHOR BASE	33.5	12	100,000	SA–213B
SA–201X	80,000	3200	50,000	2000			14	180,000	SA–213D
SA–201Z	155,000	6200	125,000	5000			15	330,000	SA–213F
SA–201ZZ	185,000	7400	155,000	6200			15	390,000	SA–213F
SA–201V	40,000	1600	10,000	400	W/ CHIEF ANCHOR BASE SEATTLE BASE	28.5	12	100,000	SA–213B
SA–201X	80,000	3200	50,000	2000			12	180,000	SA–213D
SA–201Y	125,000	5000	95,000	3800			12	270,000	SA–213F
SA–201Z	155,000	6200	125,000	5000			12	330,000	SA–213F

NOTES

1. REDUCE ALLOWABLE LOADS FOR:
   - A. TROLLEY WIRE TENSION OF 1500# AT 60° F — 10%
   - B. FOR EACH ELECTRIC LINE, COMMUNICATION LINE, OR SERVICE DROP ATTACHED TO POLE EXCEPT AT DEAD ENDS AND ANGLES — 5000 LB–FT (200 LB)
   - C. DEAD ENDS, ANGLES, AND GUYS FOR ELECTRIC AND COMMUNICATION LINES AND SERVICE DROPS REQUIRE ADDITIONAL REDUCTIONS.
2. REDUCE ALLOWABLE LOADS FOR:
   - A. TRAFFIC SPAN WITH OVER 4 HEADS OR SIGNS FOR EACH ADDITIONAL HEAD OR SIGN — 6000 LB–FT (240 LB)
   - B. 2 TRAFFIC SPANS AT 90° ±10° W/ OVER 5 HEADS OR SIGNS TOTAL FOR EACH ADDITIONAL HEAD OR SIGN — 5000 LB–FT (200 LB)
   - C. TRAFFIC ARM WITH OVER 4 HEADS OR SIGNS FOR EACH ADDITIONAL HEAD OR SIGN — 15000 LB–FT (600 LB)

DESIGNED: DPG	CHKD: DOW	King County	DEPARTMENT OF TRANSPORTATION TROLLEY STANDARDS	DATE: JAN 97
DR: TMB	SCALE: NTS			FILE
RECOM.	CONTRACT:		STANDARD STEEL POLE	DWG. NO. SA–201
APPROVED				SHT 3 OF 4

V:\Library & Standards\Standards\Trolley\Details\SA-201.1-4.dwg, SA-201-3, 1/5/2007 12:20:41 PM

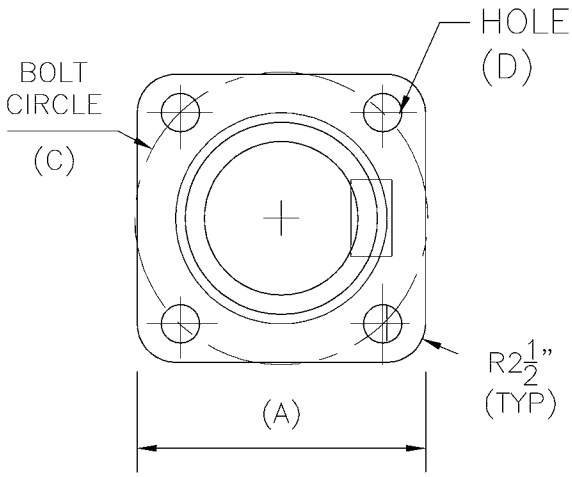

BASE PLATE FLANGE

BASE PLATE FLANGE DIMENSIONS (INCHES)				
POLE TYPE	PLATE WIDTH (A)	PLATE THICKNESS (B)	BOLT CIRCLE (C)	HOLE DIA (D)
BASE STYLE: STANDARD				
SA-201-V	18x18	1¾	18	2 1/16
SA-201-X	20x20	2	20	2 5/16
SA-201-Z	23x23	2½	22	2 13/16
SA-201-ZZ	23x23	2½	22	2 13/16
BASE STYLE: CHIEF SEATTLE				
SA-201-V	23x23	1¾	18	2 1/16
SA-201-X	23x23	2	20	2 5/16
SA-201-Y	23x23	2¼	22	2 13/16
SA-201-Z	23x23	2½	22	2 13/16

GENERAL NOTES

1. INSTALLATION:

   A. HANDLING OF POLES SHALL BE DONE ONLY BY THE ANCHOR BOLT HOLES IN THE BASE PLATE, THE HANDLING STRAP AT THE POLE TOP, OR A PAD-EYE BOLTED TO THE POLE TOP PLATE.

   B. POLES SHALL BE STORED AND TRANSPORTED HORIZONTALLY, SUPPORTED BY THE BASE PLATES, AND WITH A NEW SCRAP OF CARPETING WITHIN THE TOP FOOT OF THE POLE.

   C. ZINC REPAIR PAINT SHALL BE AS SPECIFIED IN SECTION 05121 OF THIS CONTRACT.

   D. GALVANIZING REPAIR COMPOUND SHALL BE AS SPECIFIED IN SECTION 05121 OF THIS CONTRACT.

DESIGNED DPG	CHKD: DOW	King County	DEPARTMENT OF TRANSPORTATION TROLLEY STANDARDS	DATE: JAN 97
DR: TMB	SCALE: NTS			FILE
RECOM.	CONTRACT:		STANDARD STEEL POLE	DWG. NO. SA-201
APPROVED				SHT 4 OF 4

V:\Library & Standards\Standards\Trolley\Details\SA-201.1-4.dwg, SA-201-4, 1/5/2007 12:20:46 PM

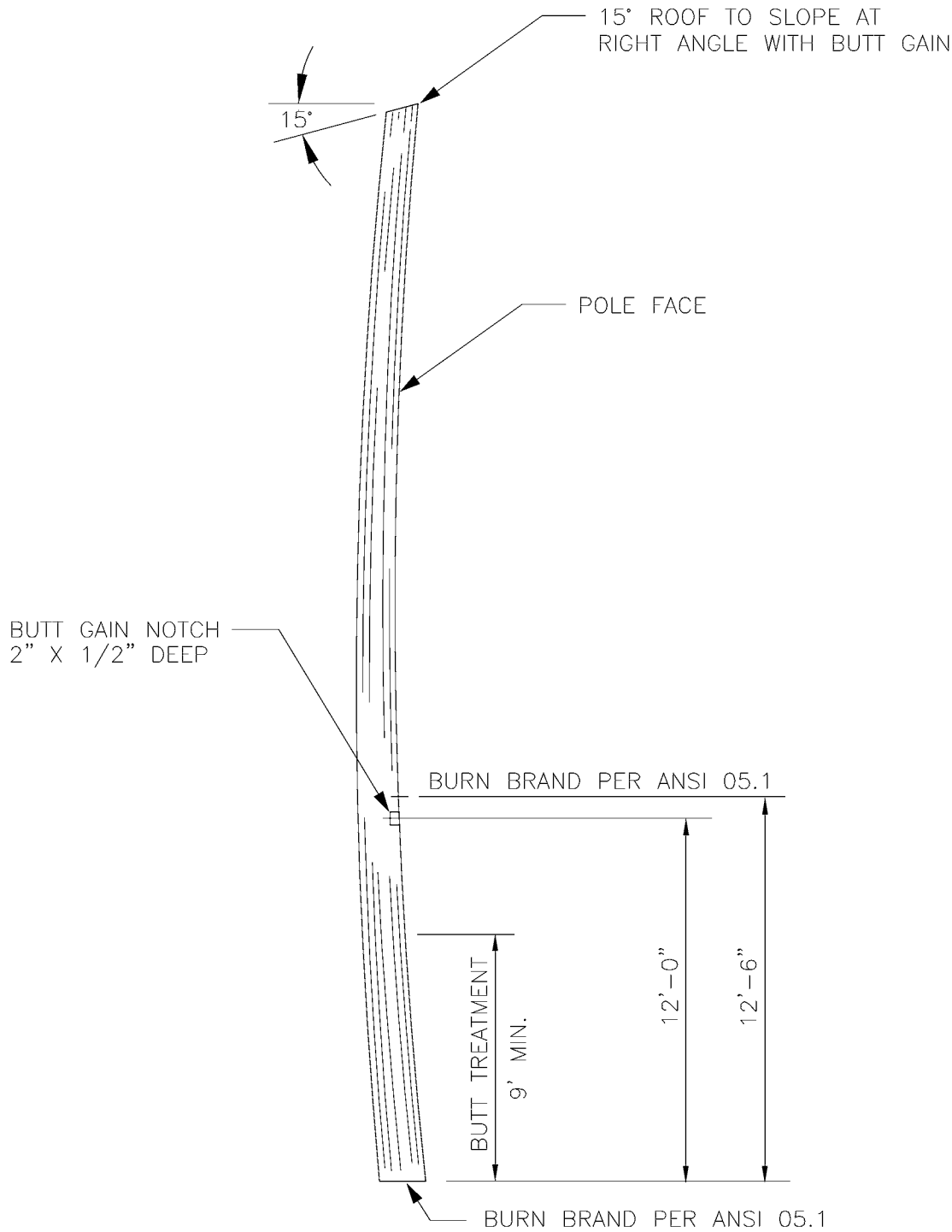

NOTES

1. POLE SHALL BE CLASS 1, WESTERN RED CEDAR, PER ANSI 05.1—LATEST EDITION.

2. METAL TAGS AND NAILS FOR BURN BRAND ARE NOT ALLOWED.

DESIGNED DPG	CHKD: DPG	King County	DEPARTMENT OF TRANSPORTATION TROLLEY STANDARDS	DATE: MAR 00
DR: DOW	SCALE: NONE			FILE
RECOM.	CONTRACT:		WOOD POLE FRAMING DETAILS	DWG. NO. SA-202
APPROVED				SHT 1 OF 1

V:\Library & Standards\Standards\Trolley\Details\SA-202-202A.dwg, SA-202, 1/5/2007 12:20:54 PM

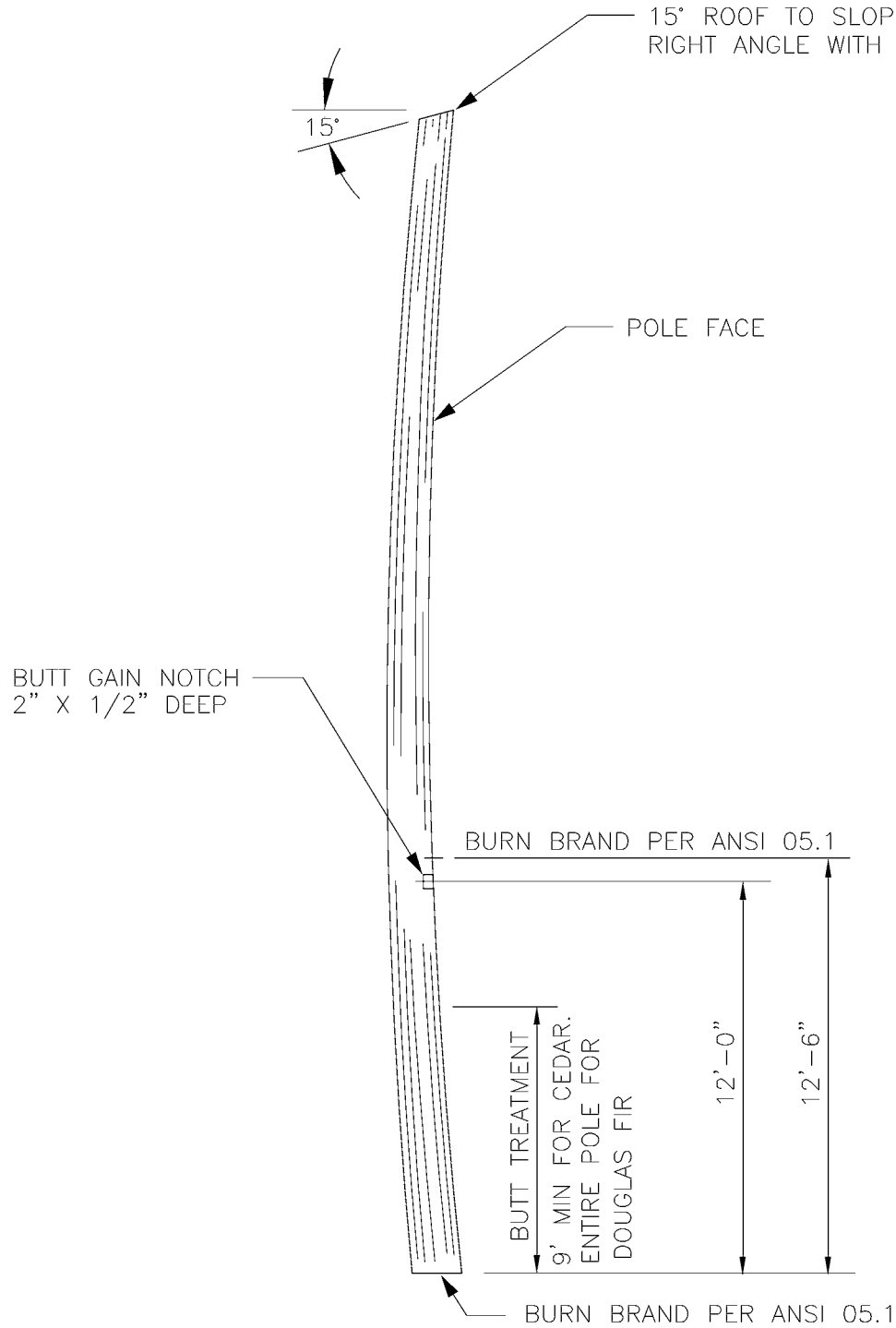

NOTES

1. POLE SHALL BE CLASS 1, WESTERN RED CEDAR OR DOUGLAS FIR, PER ANSI 05.1–LATEST EDITION.
2. METAL TAGS AND NAILS FOR BURN BRAND ARE NOT ALLOWED.

DESIGNED DPG	CHKD: DPG	King County	DEPARTMENT OF TRANSPORTATION TROLLEY STANDARDS	DATE: MAR 00
DR: DOW	SCALE: NONE			FILE
RECOM.	CONTRACT:		WOOD POLE FRAMING DETAILS	DWG. NO. SA–202A
APPROVED				SHT 1 OF 1

V:\Library & Standards\Standards\Trolley\Details\SA-202-202A.dwg, SA-202A, 1/5/2007 12:21:00 PM

DETAILS FOR SHTS 2,3 & 4

FOUNDATION TYPE	NORMAL WORKING MOMENT (LB–FT)	DIMENSIONS					REBAR QUANTITIES					
		A	P	G	B	D	R*	T	V	W	Y	Z
SA–211B	40,000	2'–4"	9"	6.5"	2.5"	8'–6"	8–#8	4–#7	6–#7	6–#7	#4@6"	4–#7
SA–211D	80,000	2'–8"	10"	7"	3"	10'–6"	12–#8	4–#8	6–#8	6–#8	#5@5"	4–#8
SA–211F	155,000	3'–0"	11.5"	8"	3.5"	13'–0"	12–#8	4–#8	6–#8	6–#8	#5@4"	4–#8

* ADD (1) #8 VERTICAL FOR GROUNDING

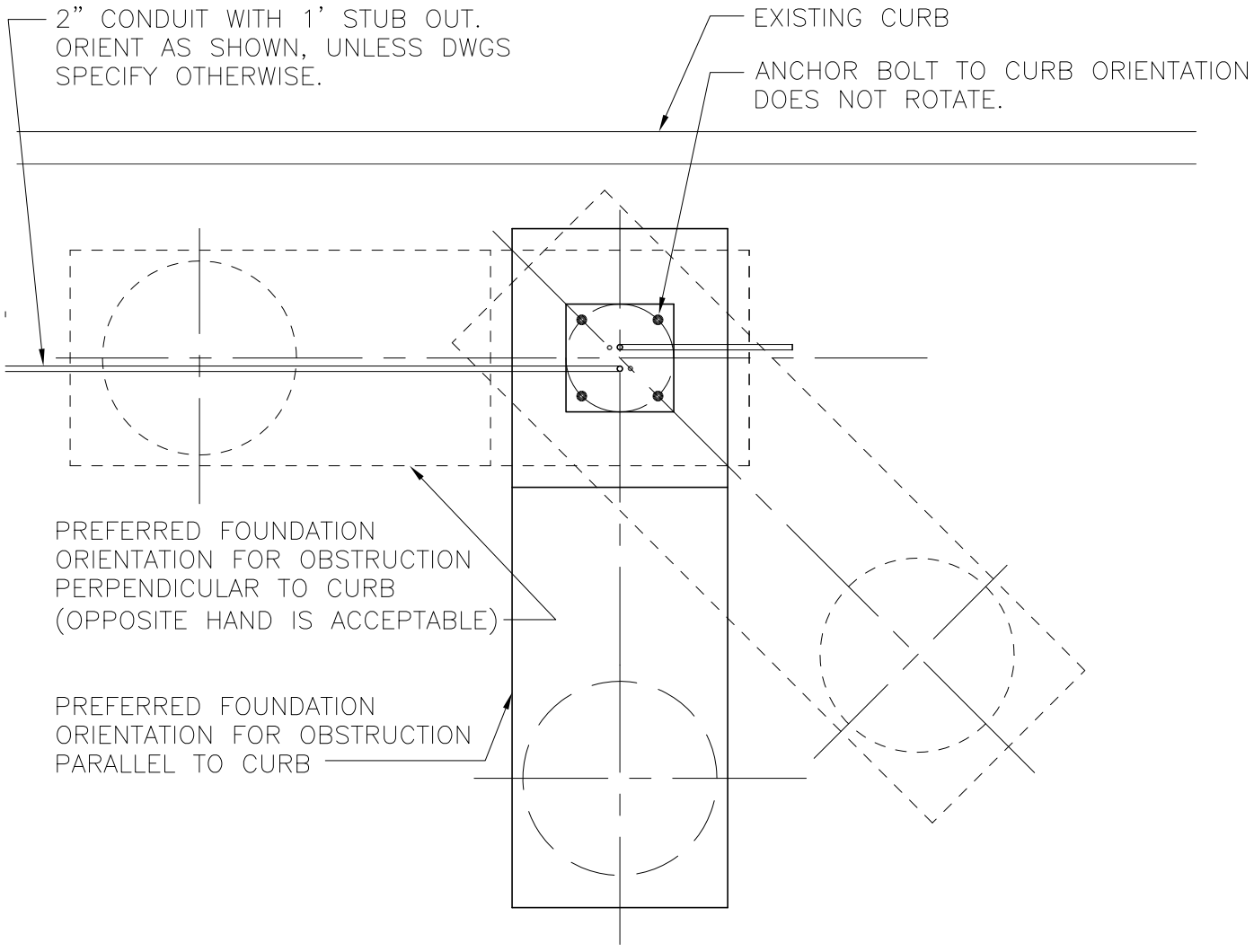

ORIENTATION PLAN

\\kcmpopeye\dc\CAD_Folders\Library & Standards\Standards\Trolley\Details\SA–211.1–7.dwg | Layout: SA–211.1
XREFS: | IMAGES:
PLOTTED: Feb 20, 2008–02:13:25pm By suterj

DESIGNED DPG	CHKD: DPG	King County	DEPARTMENT OF TRANSPORTATION TROLLEY STANDARDS	DATE: OCT 95	
DR: DOW	SCALE: NONE		OFFSET FOUNDATION ANCHOR BASE POLE	FILE	
RECOM.	CONTRACT:			DWG. NO. SA–211	
APPROVED				SHT 1 OF 7	

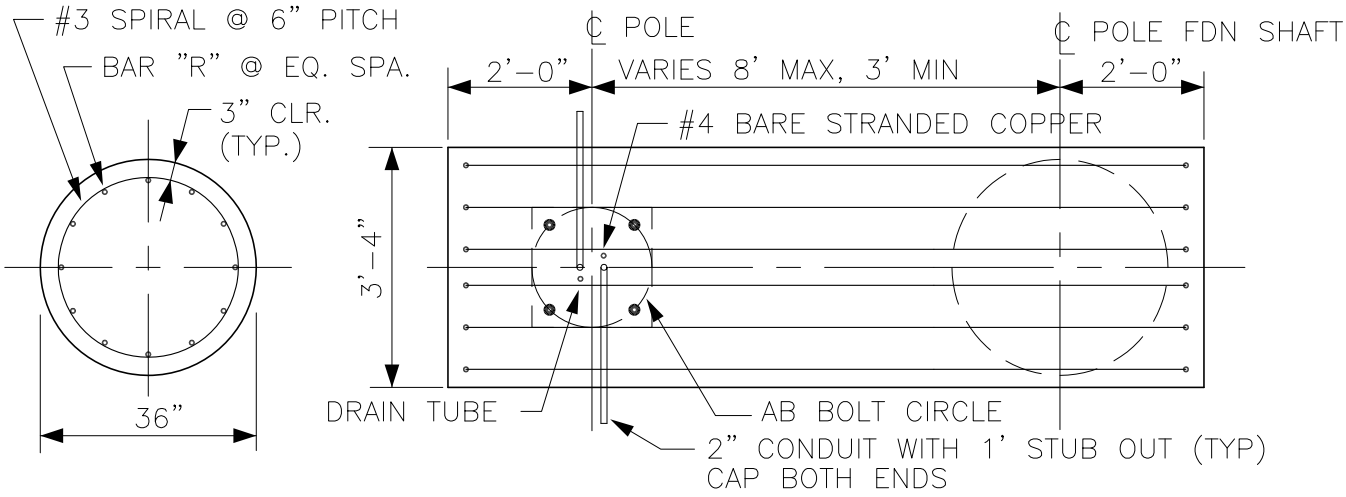

SECTION A-A

PLAN

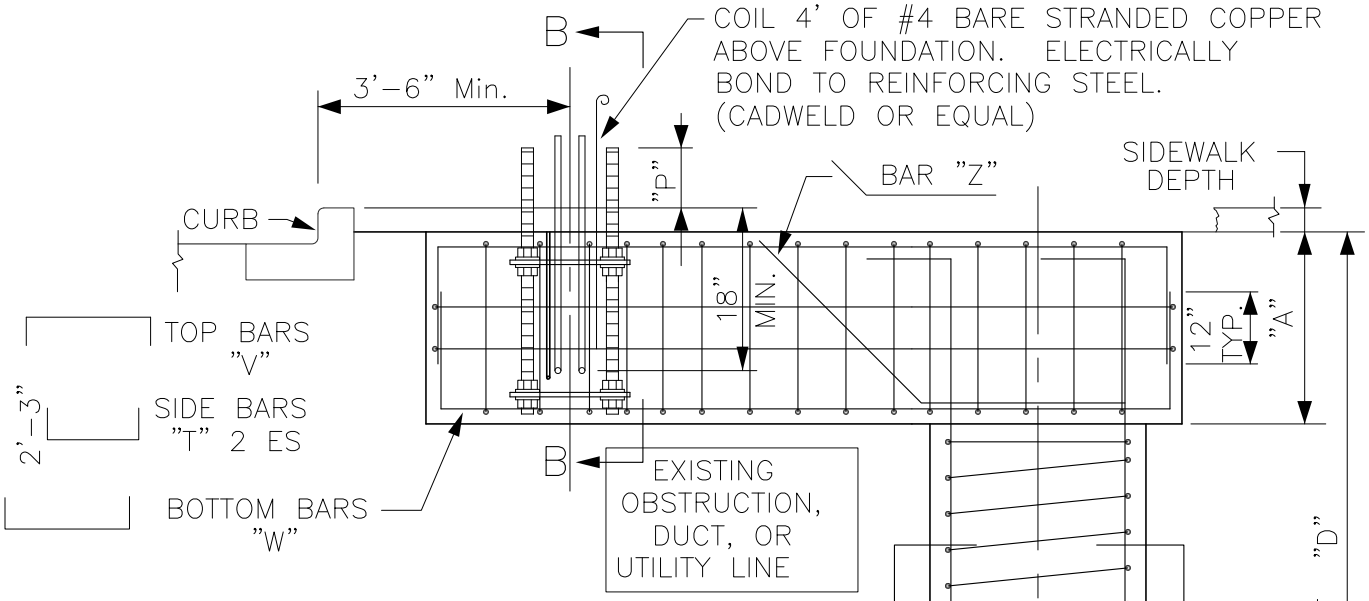

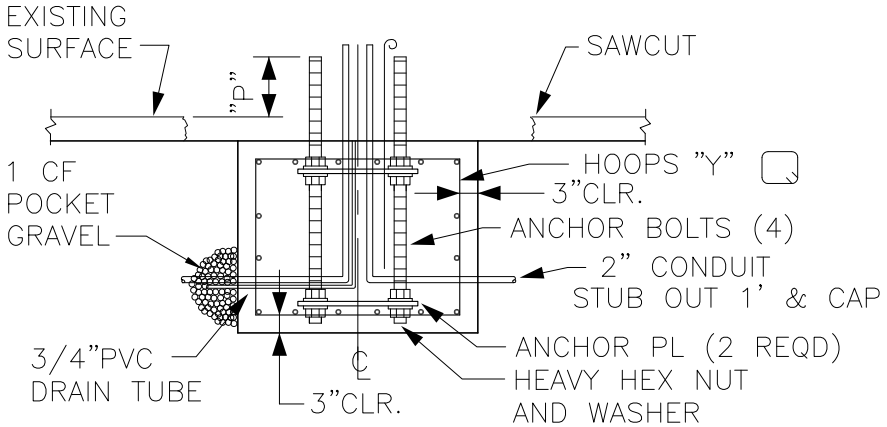

SECTION B-B

ELEVATION

DESIGNED DPG	CHKD: DPG	King County	DEPARTMENT OF TRANSPORTATION TROLLEY STANDARDS	DATE: OCT 95
DR: DOW	SCALE:		OFFSET FOUNDATION ANCHOR BASE POLE (WITH SIDEWALK)	FILE
RECOM.	CONTRACT:			DWG. NO. SA-211
APPROVED				SHT 2 OF 7

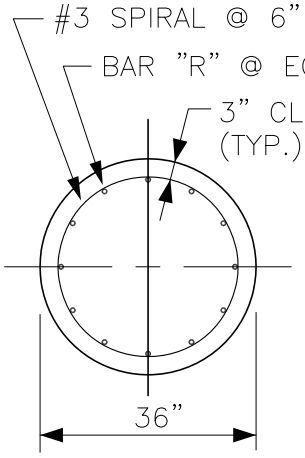

SECTION A–A

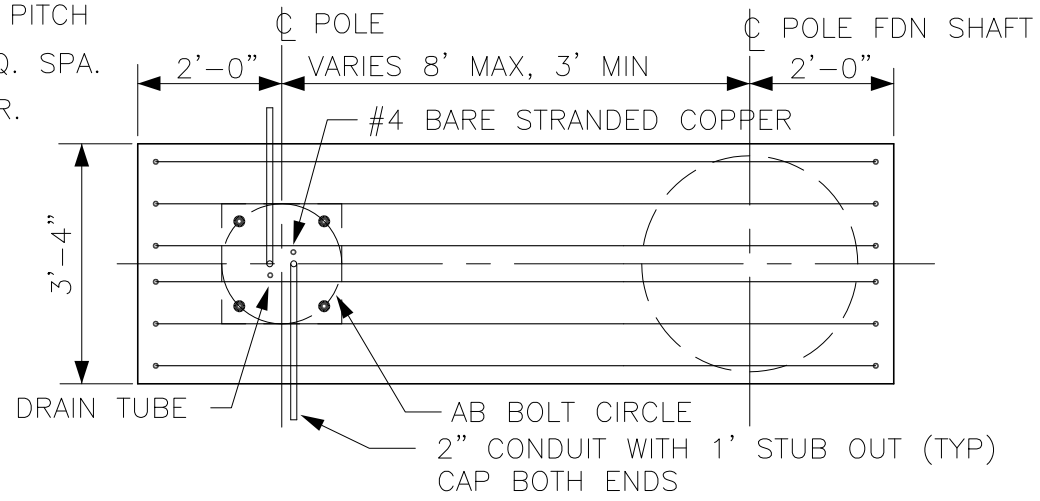

PLAN

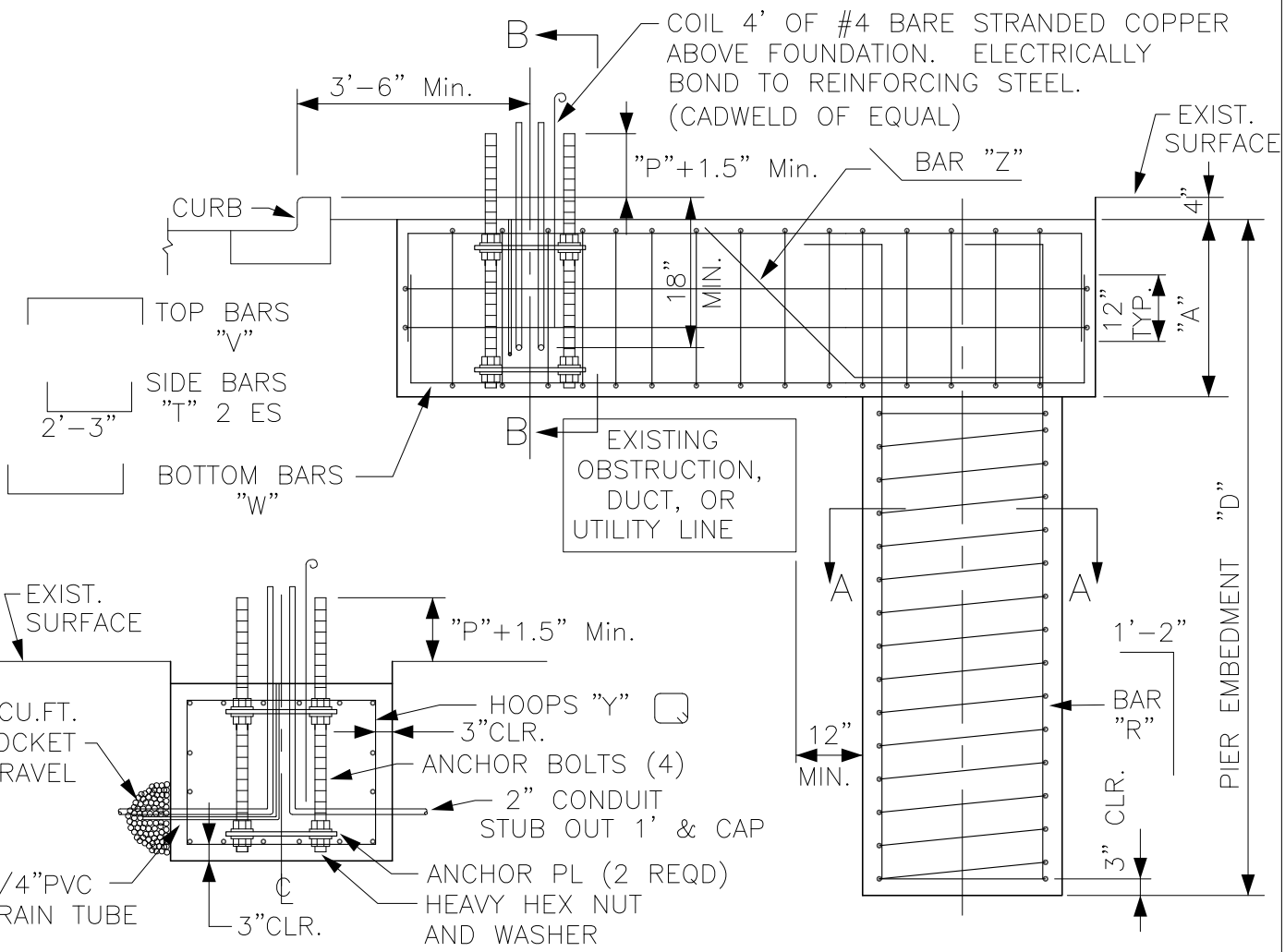

SECTION B–B

ELEVATION

DESIGNED DPG	CHKD: DPG	King County	DEPARTMENT OF TRANSPORTATION TROLLEY STANDARDS	DATE: OCT 95
DR: DOW	SCALE: NONE			FILE
RECOM.	CONTRACT:		OFFSET FOUNDATION ANCHOR BASE POLE (WITHOUT SIDEWALK)	DWG. NO. SA–211
APPROVED				SHT 3 OF 7

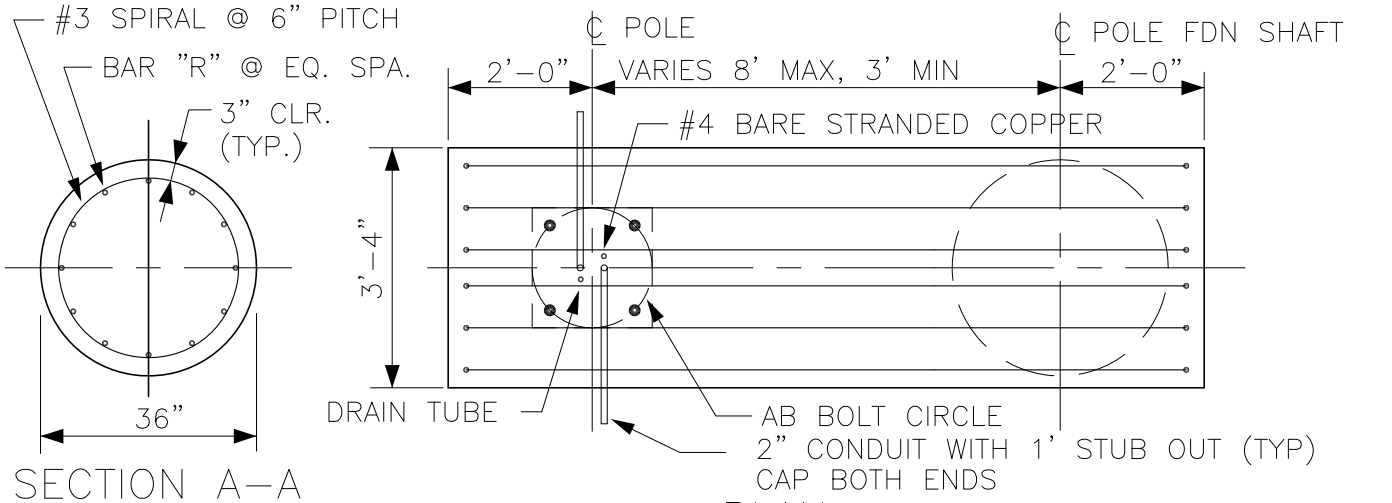

SECTION A-A

PLAN

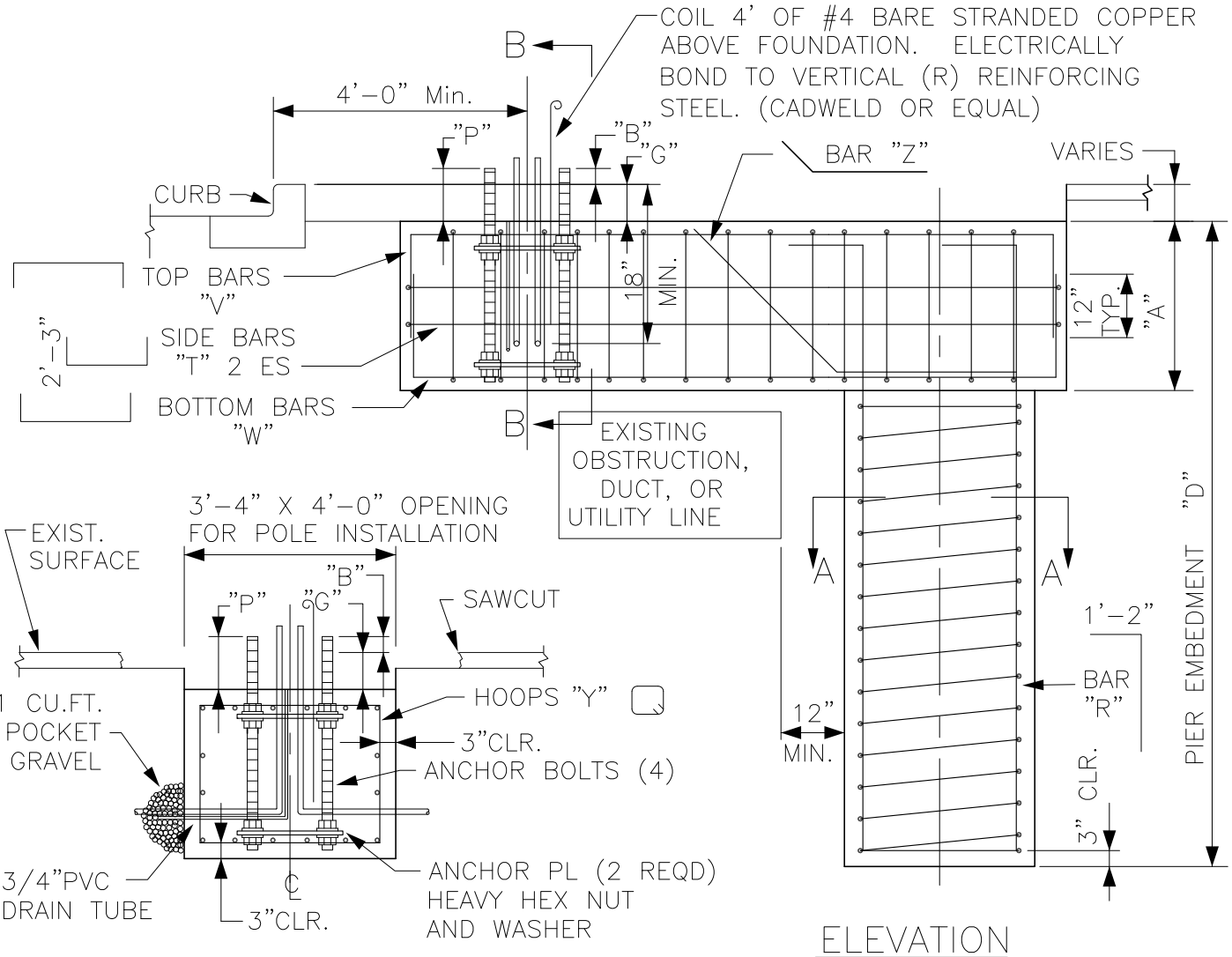

SECTION B-B

ELEVATION

DESIGNED DPG	CHKD: DPG	King County	DEPARTMENT OF TRANSPORTATION TROLLEY STANDARDS	DATE: OCT 95
DR: DOW	SCALE: NONE			FILE
RECOM.	CONTRACT:		OFFSET FOUNDATION ANCHOR BASE POLE (CHIEF SEATTLE BASE)	DWG. NO. SA-211
APPROVED				SHT 4 OF 7

\\kcmpopeye\dc\CAD_Folders\Library & Standards\Standards\Trolley\Details\SA-211.1-7.dwg | Layout: SA-211.4
XREFS: | IMAGES:
PLOTTED: Feb 20, 2008-02:15:17pm By suterj

FOUNDATION TYPE	ANCHOR BOLT DIAM. (INCHES) (A)	ANCHOR PLATE DIMENSIONS (INCHES)					
		PLATE THICK. (B)	PLATE WIDTH (C)	BOLT HOLE (D)	CENTER HOLE (E)	CORNER RADIUS (F)	BOLT CIRCLE (G)
SA-211B	1 3/4	3/8	16 X 16	1 7/8	12 1/2	1 5/8	18
SA-211D	2	3/8	18 X 18	2 1/8	14	2	20
SA-211F	2 1/2	1/2	20 X 20	2 5/8	15	2 1/4	22

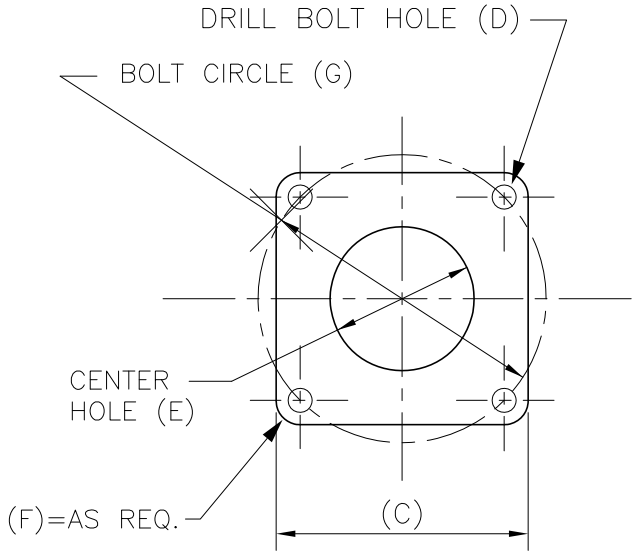

ANCHOR PLATE DETAIL

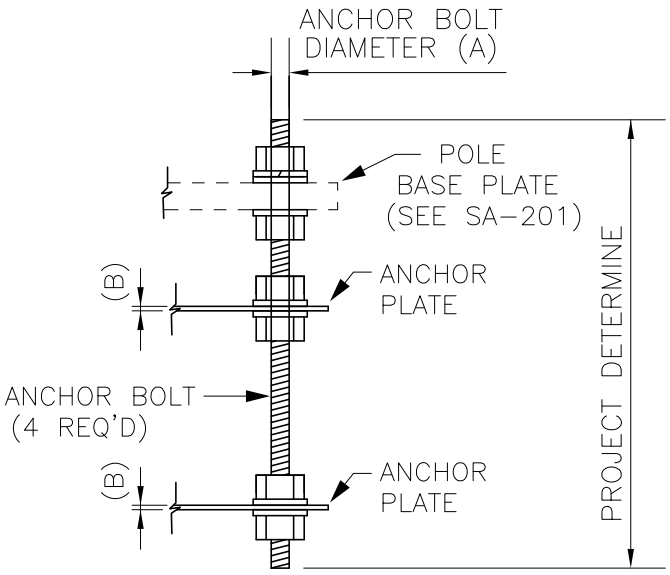

TYP. ANCHOR BOLT

COMPLETE WITH 6 NUTS
6 FLAT WASHERS & 1 LOCK WASHER

DESIGNED DPG	CHKD: DOW	King County	DEPARTMENT OF TRANSPORTATION TROLLEY STANDARDS	DATE: JUN 95
DR: TMB	SCALE: NONE		OFFSET FOUNDATION ANCHOR BASE POLE	FILE
RECOM.	CONTRACT:			DWG. NO. SA-211
APPROVED				SHT 5 OF 7

GENERAL NOTES

1. CONCRETE AND REINFORCING STEEL

1.1 All work shall be done per City of Seattle Board of Public Works Rules: Chapter 40.4 – Street and Sidewalk Pavement Opening and Restoration Rules if in Street Right Of Way.

1.2 Concrete shall be City of Seattle Class AX air entrained, 3/4" max aggregate, and with a minimum compressive strength of 4000 PSI at 28 days.

1.3 All reinforcing bars shall be deformed billet steel conforming to ASTM A615 Grade 60.

1.4 Minimum clear concrete cover shall be 3 inches.

1.5 Reinforcing details and fabrication shall be as recommended in ACI 315 "Details & Detailing of Concrete Reinforcement."

1.6 No construction joints shall be permitted.

2. ANCHOR PLATES, BOLTS, NUTS AND WASHERS

2.1 Anchor bolts including nuts and flat washers shall conform to ASTM F1554–99 Grade 105 class 2a including supplementary requirements S2, S3, and S5. Threads shall conform to the ANSI Standard B1.1 for UNC thread. Anchor bolts shall have 36 inches of thread on exposed end and 12 inches of thread on the embedded end, or shall be fully threaded.

2.2 Anchor plates shall conform to ASTM A36.

3. GALVANIZING

3.1 Anchor plates, anchor bolts, anchor bolt nuts and washers shall be hot–dip galvanized in conformance to ASTM A153 or ASTM A123.

4. SOIL

4.1 Embedment depth is adequate for three times the working moment in cohesive soils of c=1000PSF and ø=0° or better and cohesionless soils of c=0PSF and ø=26° or better.

DESIGNED DPG	CHKD: DPG	King County	DEPARTMENT OF TRANSPORTATION TROLLEY STANDARDS	DATE: FEB 08
DR: BFB	SCALE: NONE		OFFSET FOUNDATION ANCHOR BASE POLE	FILE
RECOM.	CONTRACT:			DWG. NO. SA–211
APPROVED				SHT 6 OF 7

4.2 Embedment depth is adequate for three times the working moment in cohesive soils of c=1000PSF and ø=0° or better and cohesionless soils of c=0PSF and ø=26° or better.

5. SUBMITTALS

5.1 Reinforcing steel shop drawings and certificate of compliance.

5.2 Concrete mix proportions, admixtures and slump.

5.3 Anchor plate, anchor bolt, anchor bolt nuts and washers certificates of compliance.

5.4 A test report shall be provided in accordance with ASTM F1554–99 and supplementary requirements.

6. INSPECTION

6.1 Concrete shall not be placed until the Engineer has inspected the excavation, the grounding, the anchor bolts, and the placement of the reinforcing bar cage.

7. ANCHOR BOLT SETTING

7.1 Cover exposed anchor bolt threads and nuts with at least 3 layers of plastic tape before placing concrete.

7.2 Anchor bolt template shall by used temporarily at the top of anchor bolts for accurate positioning and aligning.

8. CONDUIT

8.1 Conduit from foundation shall be schedule 80 PVC. Conduit bends shall have a minimum radius of 12".

DESIGNED DPG	CHKD: DPG	King County	DEPARTMENT OF TRANSPORTATION TROLLEY STANDARDS	DATE: FEB 99
DR: DOW	SCALE: NONE		OFFSET FOUNDATION ANCHOR BASE POLE	FILE
RECOM.	CONTRACT:			DWG. NO. SA–211
APPROVED				SHT 7 OF 7

EMBEDDED FOUNDATION SCHEDULE				
FOUNDATION TYPE	NORMAL WORKING MOMENT (LB-FT)	PIER EMBEDMENT DEPTH (D) (FEET)	REBAR REQUIREMENTS	
			VERTICAL	SPIRAL TIES
SA-212-B	40,000	8.5	8-#8	#3 @ 6"
SA-212-D	80,000	10.5	12-#8	#3 @ 6"
SA-212-F	155,000	13	12-#8	#3 @ 6"

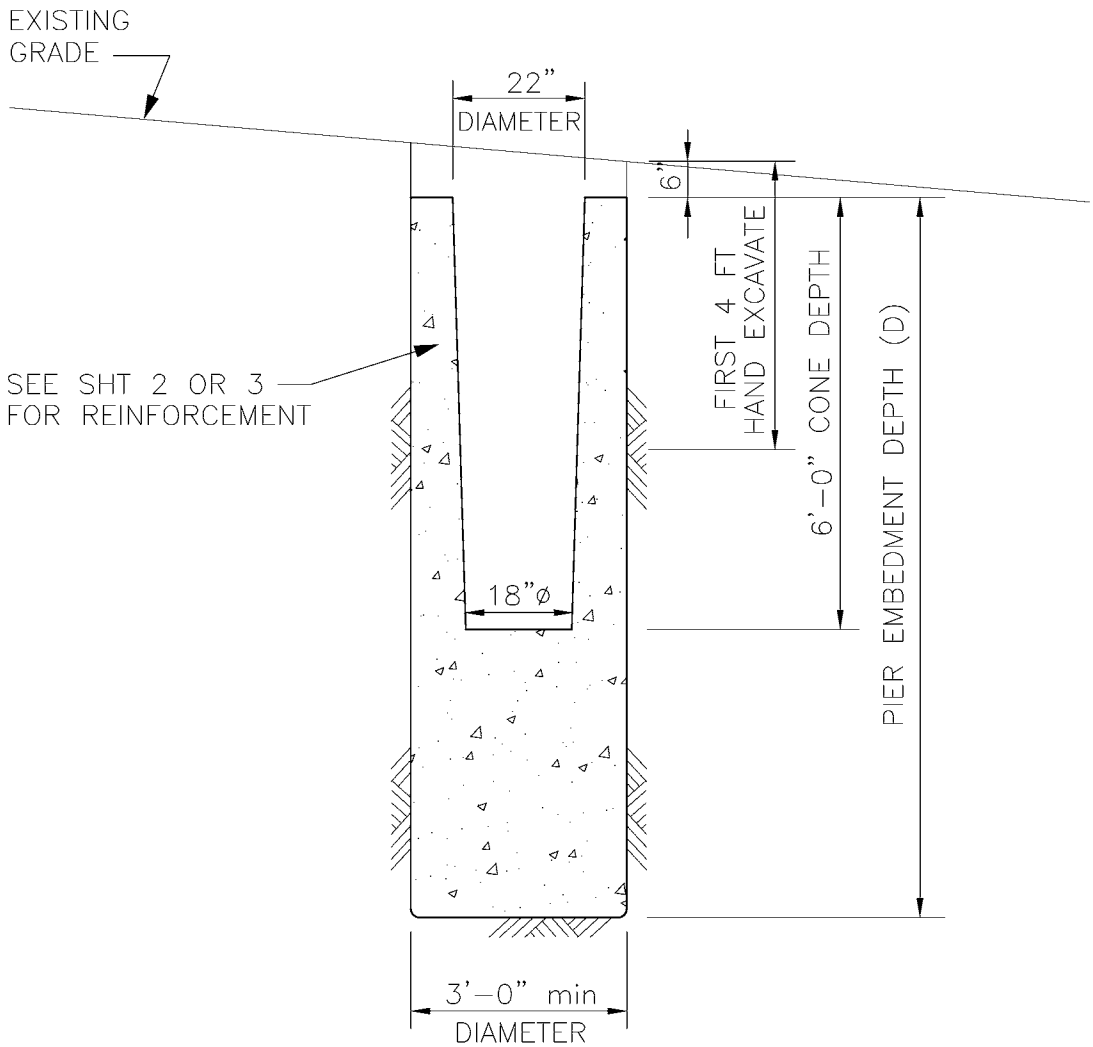

INCLINED CONDITION & CONE DETAIL

REBAR NOT SHOWN FOR CLARITY

NOTES

1. SEE SHEET 4 FOR GENERAL NOTES.

DESIGNED D GREER	CHKD: A WOLAK	King County	METRO TRANSIT DIVISION TROLLEY STANDARDS EMBEDDED STEEL POLE FOUNDATION	DATE: JULY 2006
DR: BFB	SCALE: NONE			FILE
RECOM.	IBIS NO:		STANDARD FOUNDATION	DWG. NO. SA-212
APPROVED J DAVIS	CONTRACT NO:			SHT 1 OF 6

V:\Library & Standards\Standards\Trolley\Details\SA-212.1-6.dwg | Layout: SA-212.1
XREFS: | IMAGES:
PLOTTED: Jan 03, 2007 12:21:49 pm By: satej
V:\Library & Standards\Standards\Trolley\Details\SA-212.1-6.dwg, SA-212.1, 1/5/2007 12:21:44 PM

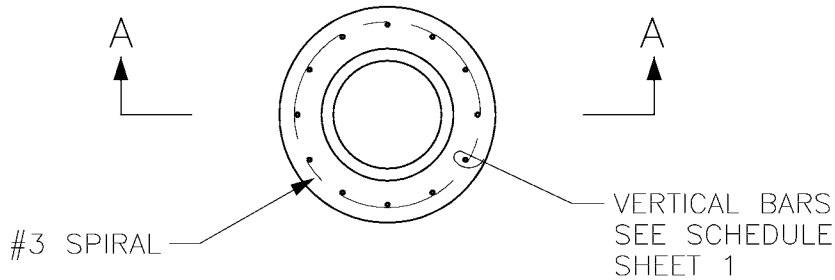

PLAN VIEW

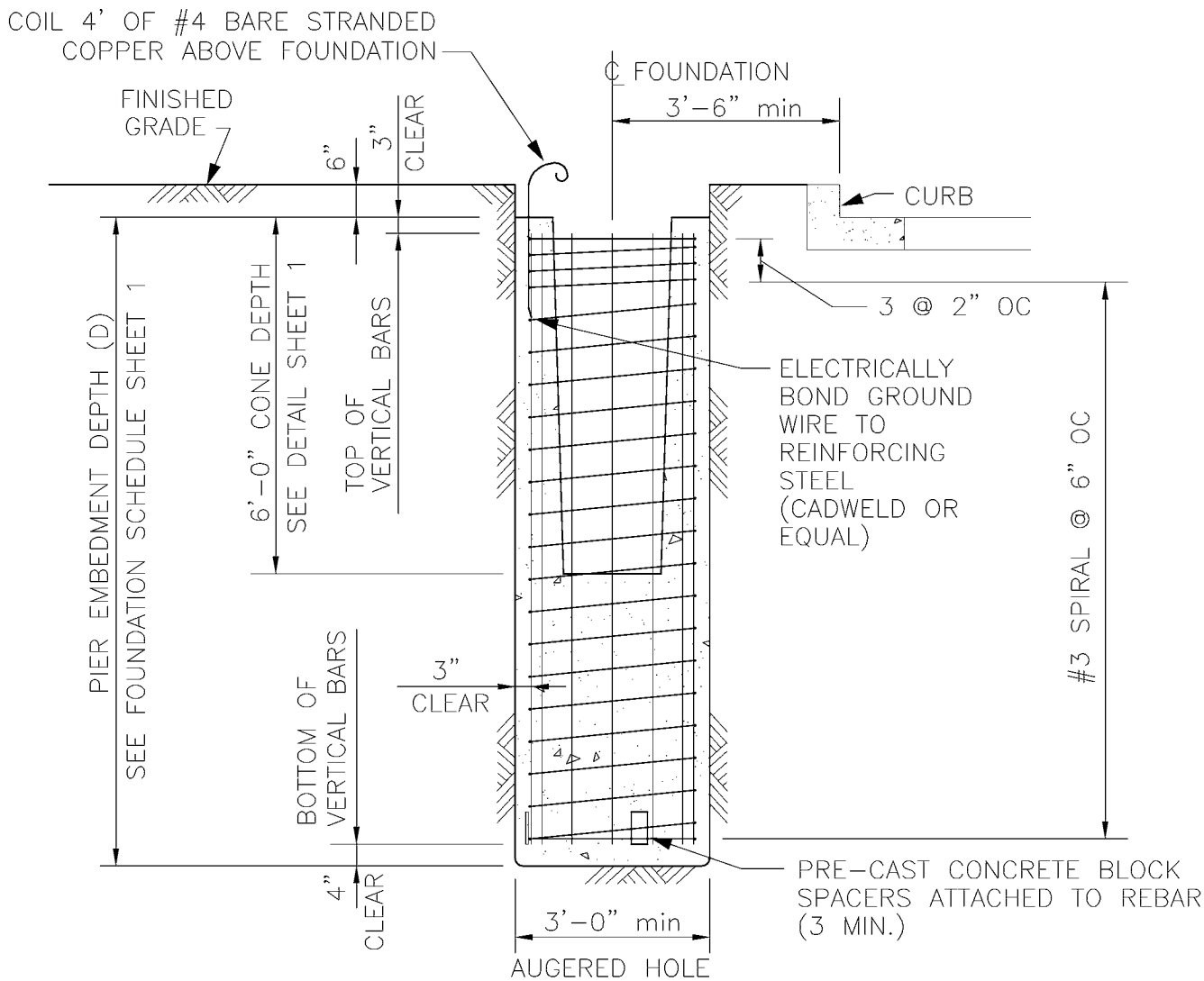

SECTION A-A
WITHOUT SIDEWALK

NOTES

1. SEE SHEET 4 FOR GENERAL NOTES.

DESIGNED D GREER	CHKD: A WOLAK	King County	METRO TRANSIT DIVISION TROLLEY STANDARDS EMBEDDED STEEL POLE FOUNDATION	DATE: JULY 2006
DR: BFB	SCALE: NONE			FILE
RECOM.	IBIS NO:		STANDARD FOUNDATION	DWG. NO. SA-212
APPROVED J DAVIS	CONTRACT NO:			SHT 2 OF 6

V:\Library & Standards\Standards\Trolley\Details\SA-212.1-6.dwg | Layout: SA-212.2
XREFS: | IMAGES:
PLOTTED: Jan 03, 2007 12:21:53pm By: sdeej

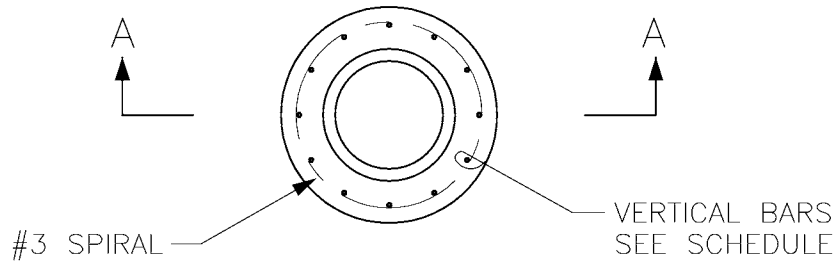

PLAN VIEW

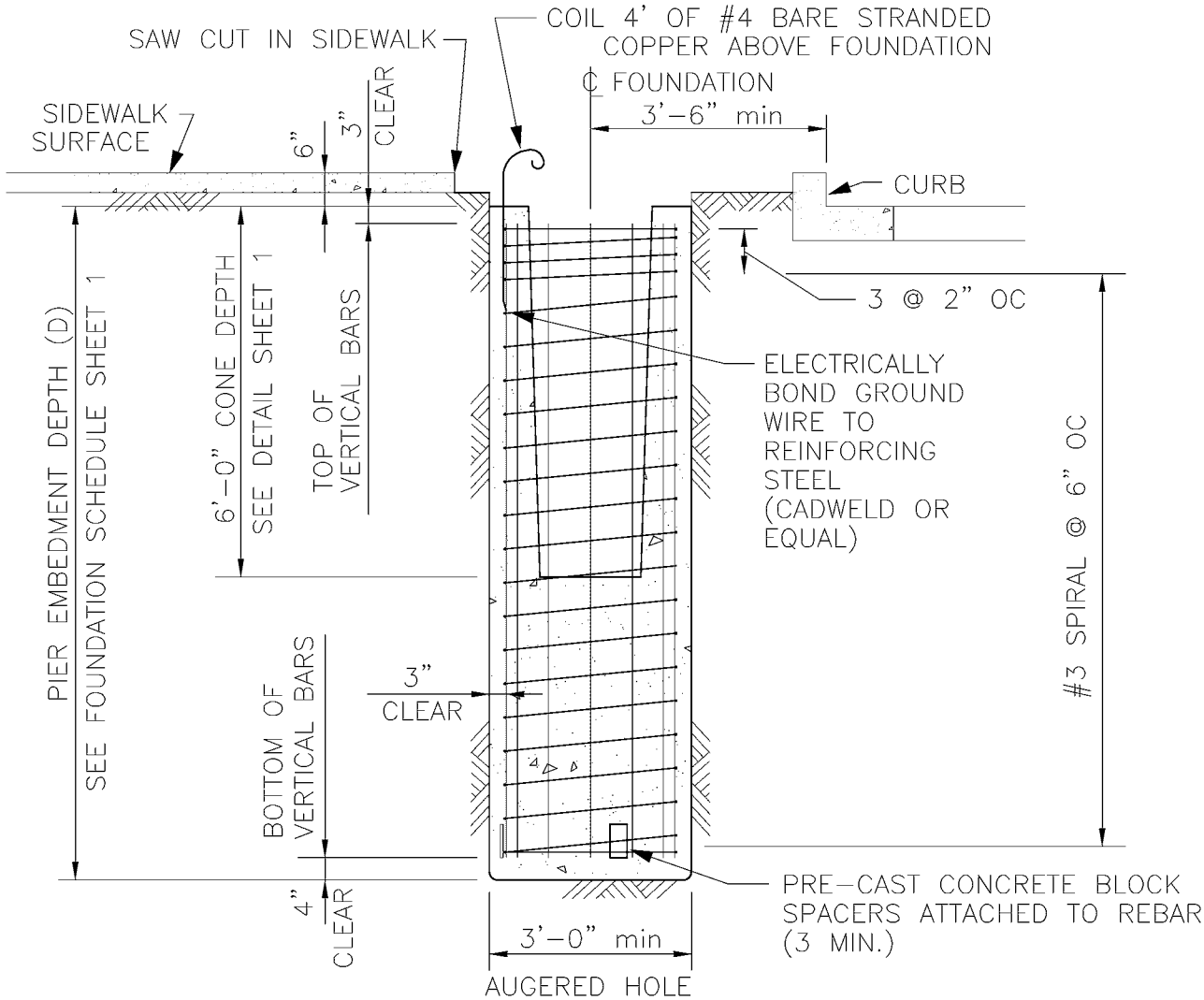

SECTION A-A
WITH SIDEWALK

NOTES

1. SEE SHEET 4 FOR GENERAL NOTES.

DESIGNED D GREER	CHKD: A WOLAK	King County	METRO TRANSIT DIVISION TROLLEY STANDARDS EMBEDDED STEEL POLE FOUNDATION	DATE: JULY 2006
DR: BFB	SCALE: NONE			FILE
RECOM.	IBIS NO:		STANDARD FOUNDATION	DWG. NO. SA-212
APPROVED J DAVIS	CONTRACT NO:			SHT 3 OF 6

V:\Library & Standards\Standards\Trolley\Details\SA-212.1-6.dwg | Layout: SA-212.3
XREFS: | IMAGES:
PLOTTED: Jan 03, 2007 12:21:58pm By: sater
V:\Library & Standards\Standards\Trolley\Details\SA-212.1-6.dwg, SA-212.3, 1/5/2007 12:21:55 PM

GENERAL NOTES

1. CONCRETE

1.1 All work shall be done per City of Seattle Board of Public Works Rules: Chapter 40.4 – Street and Sidewalk Pavement Opening and Restoration Rules if in Street Right Of Way.

1.2 Concrete shall be City of Seattle Class AX air entrained, 3/4" max aggregate, and with a minimum compressive strength of 4000 PSI at 28 days.

1.3 All reinforcing bars shall be deformed billet steel conforming to ASTM A615 Grade 60.

1.4 Minimum clear concrete cover shall be 3 inches.

1.5 Reinforcing details and fabrication shall be as recommended in ACI 315 "Details & Detailing of Concrete Reinforcement."

1.6 No construction joints shall be permitted.

2. SOIL

2.1 Embedment depth is based upon research report numbers 105–1, 105–2 Resistance of a drilled shaft footing to overturning loads by Texas Transportation Institute, 1968.

2.2 Embedment depth is adequate for three times the working moment in cohesive soils of c=1000PSF and ø=0° or better and cohesionless soils of c=0PSF and ø=26° or better.

3. SUBMITTALS

3.1 Reinforcing steel shop drawings and certificate of compliance.

3.2 Concrete mix proportions, admixtures and slump.

4. INSPECTION

4.1 Concrete shall not be placed until the Engineer has inspected the excavation, the grounding, the cone, and the placement of the reinforcing bar cage.

DESIGNED D GREER	CHKD: A WOLAK	King County	METRO TRANSIT DIVISION TROLLEY STANDARDS EMBEDDED STEEL POLE FOUNDATION	DATE: JULY 2006
DR: BFB	SCALE: NONE			FILE
RECOM.	IBIS NO:		STANDARD FOUNDATION	DWG. NO. SA–212
APPROVED J DAVIS	CONTRACT NO:			SHT 4 OF 6

V:\Library & Standards\Standards\Trolley\Details\SA-212.1-6.dwg | Layout: SA-212.4
XREFS: | IMAGES:
PLOTTED: Jan 03, 2007 12:22:03pm By: saterj

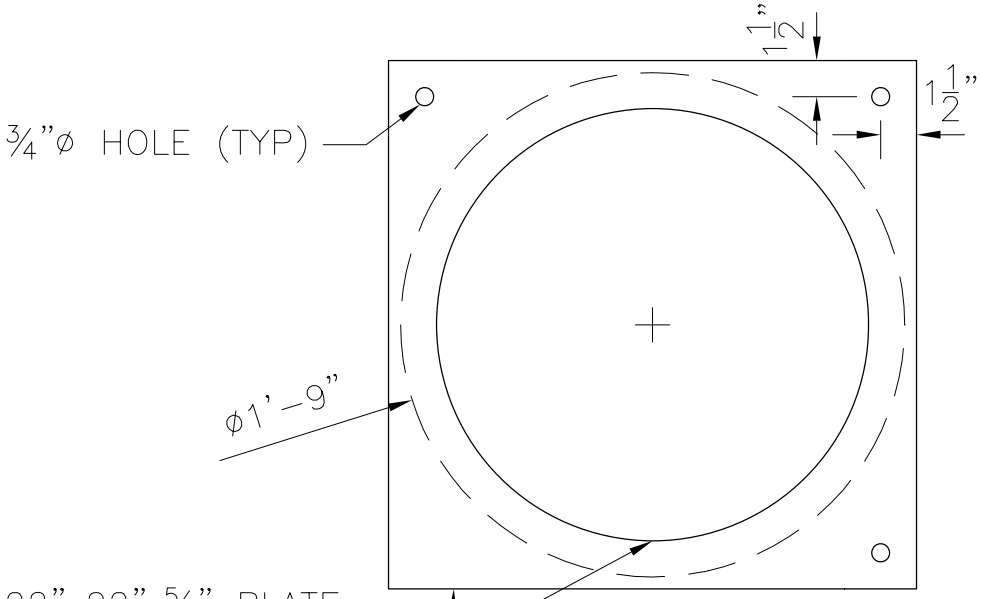

PLAN VIEW

NOTE:

ALL MATERIAL SHALL BE ASTM A36.

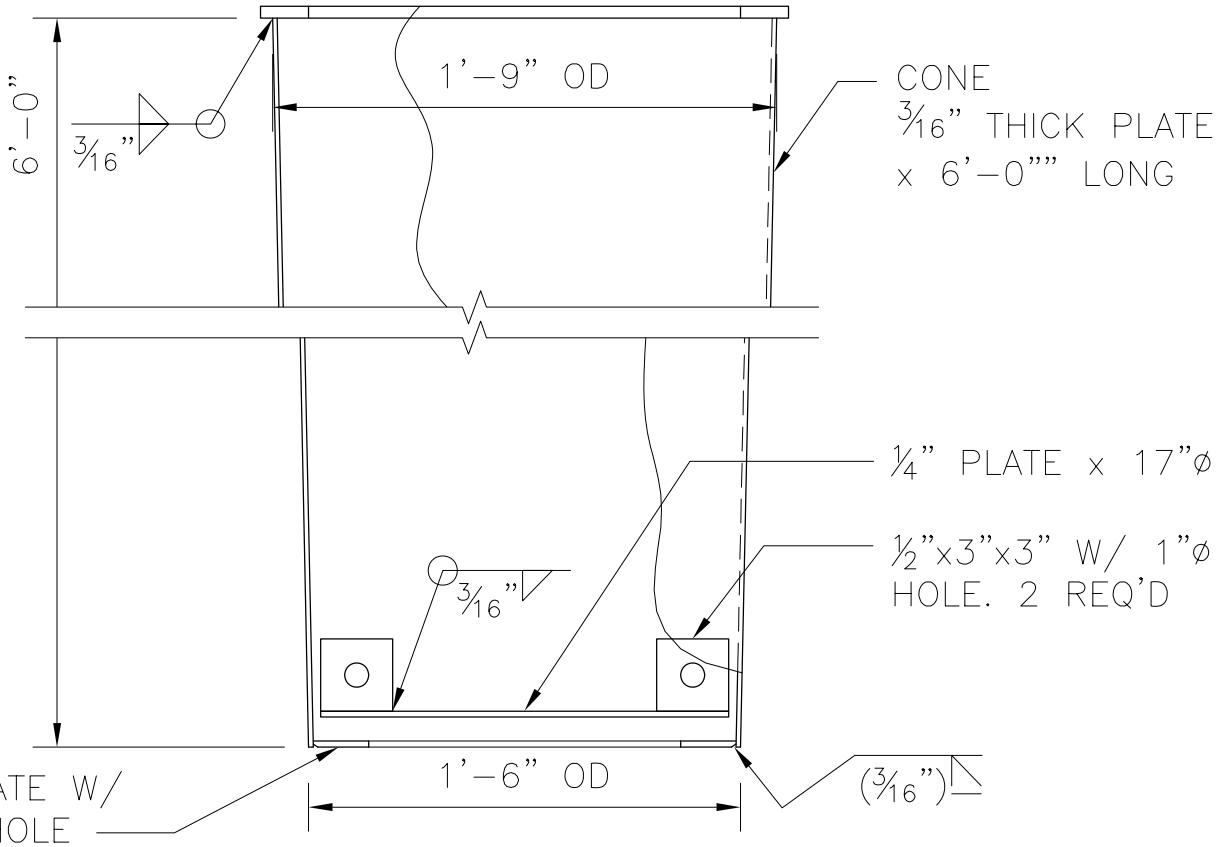

ELEVATION VIEW

DESIGNED: D GREER	CHKD: J DAVIS	King County	METRO TRANSIT DIVISION TROLLEY STANDARDS EMBEDDED STEEL POLE FOUNDATION	DATE: JANUARY 07
DR: B FARISS-B	SCALE: 1.5" = 1'			FILE
RECOM.	IBIS NO:		INTERIOR CONE FORM FOR SA-212	DWG. NO. SA-212
APPROVED	CONTRACT NO:			SHT 5 OF 6

V:\Library & Standards\Working Documents\Trolley\Details\Completed Detail Drawing Files\SA-212.1-6.dwg | Layout: SA-212.5
XREFS: | IMAGES:
PLOTTED: Jan 23, 2007-01:36:16pm By Farissb

NOTE:

MATERIAL SHALL BE ASTM A36.

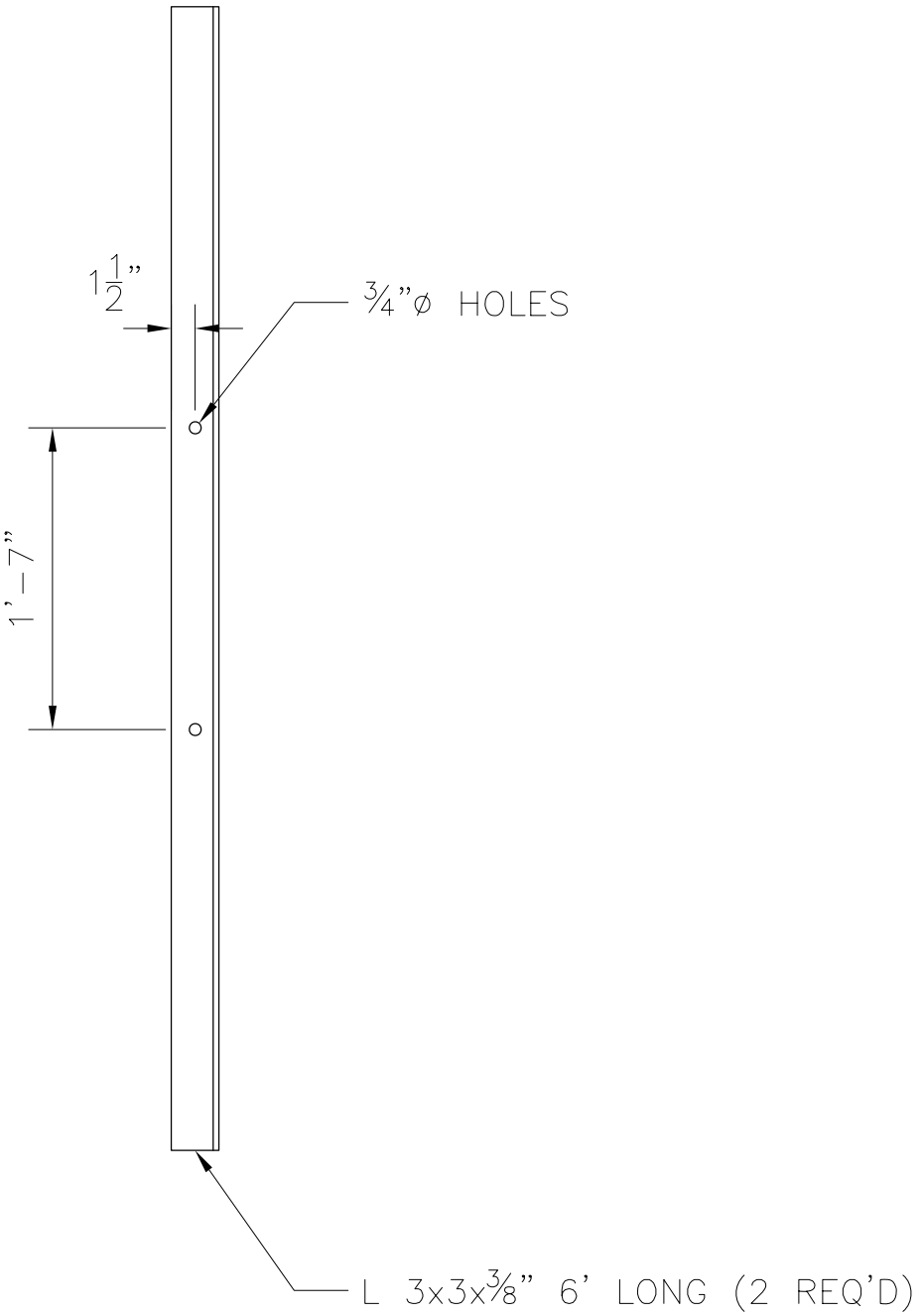

DESIGNED D GREER	CHKD: J DAVIS	King County	METRO TRANSIT DIVISION TROLLEY STANDARDS EMBEDDED STEEL POLE FOUNDATION	DATE: JANUARY 07
DR: B FARISS-B	SCALE: 1" = 1'			FILE
RECOM.	IBIS NO:		INTERIOR CONE FORM FOR SA-212	DWG. NO. SA-212
APPROVED	CONTRACT NO:			SHT 6 OF 6

V:\Library & Standards\Working Documents\Trolley\Details\Completed Detail Drawing Files\SA-212.1-6.dwg | Layout: SA-212.6
XREFS: | IMAGES:
PLOTTED: Jan 23, 2007-01:19:20pm By Farissb

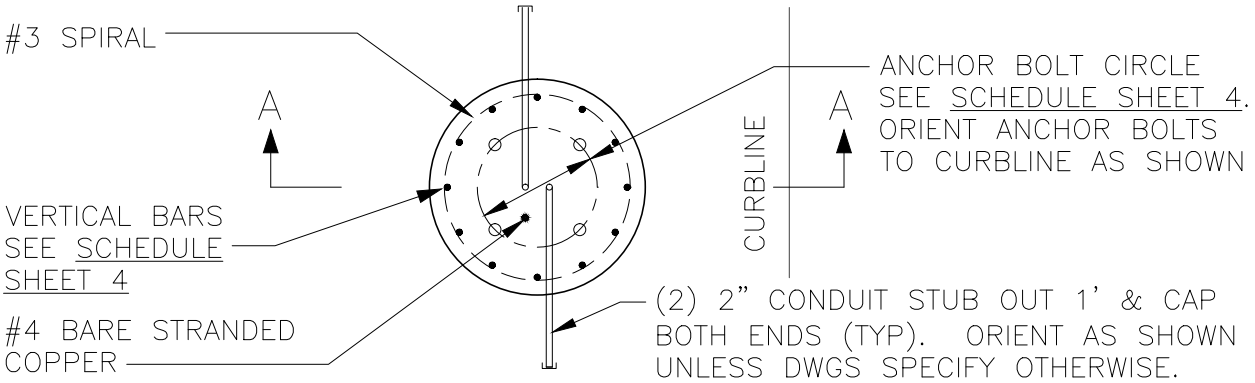

PLAN VIEW

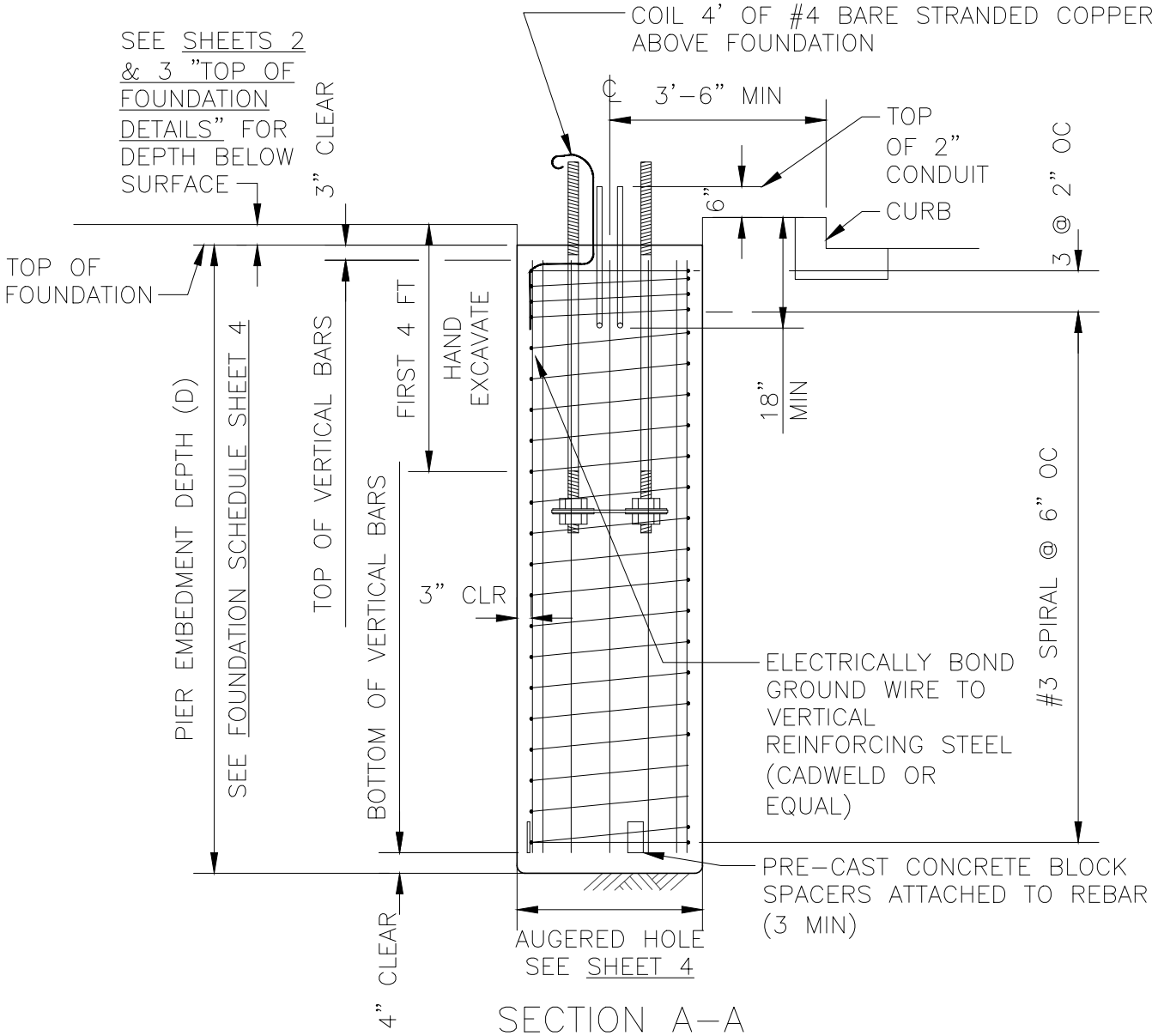

SECTION A-A

NOTES

1. SEE SHEETS 6 & 7 FOR GENERAL NOTES.

DESIGNED: DPG	CHKD: DPG	King County	DEPARTMENT OF TRANSPORTATION TROLLEY STANDARDS	DATE: JULY 2008
DRAWN: TMB	SCALE: NONE			FILE
RECOMMENDED:	CONTRACT:		STANDARD FOUNDATION (ANCHOR BASE STEEL POLE)	DWG. NO. SA-213
APPROVED:				SHT 1 OF 7

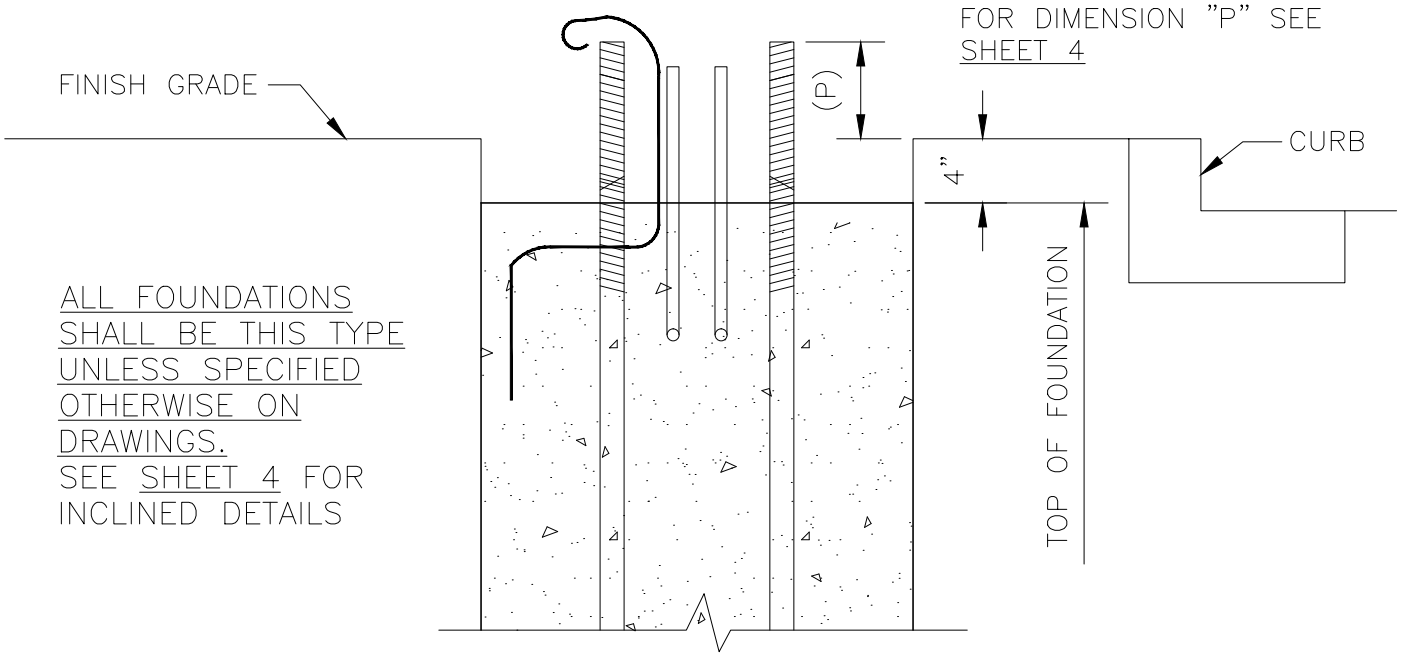

STANDARD CONDITION
TOP OF FOUNDATION DETAILS

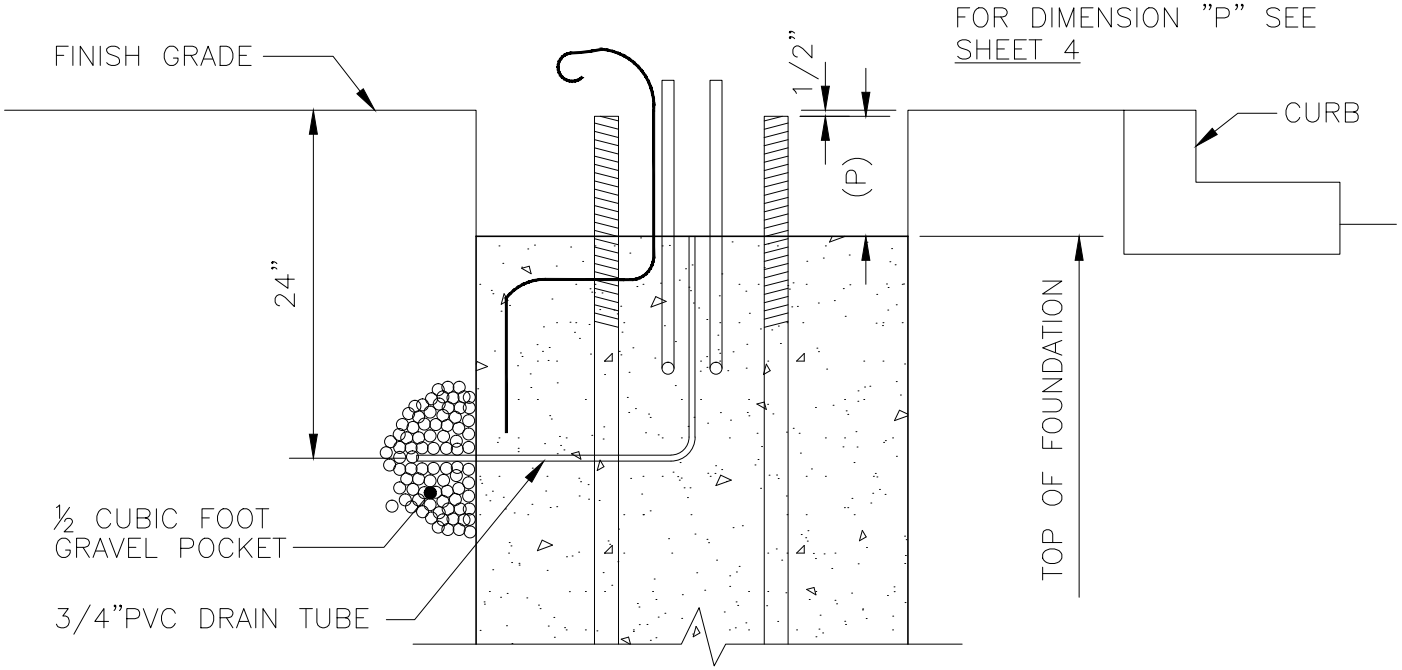

BURIED CONDITION
TOP OF FOUNDATION DETAILS
SEE SHEET 4 FOR INCLINED DETAILS

DESIGNED: DPG	CHKD: DPG	King County	DEPARTMENT OF TRANSPORTATION TROLLEY STANDARDS STANDARD FOUNDATION (ANCHOR BASE STEEL POLE)	DATE: JULY 2008
DRAWN: TMB	SCALE: NONE			FILE
RECOMMENDED:	CONTRACT:			DWG. NO. SA–213
APPROVED:				SHT 2 OF 7

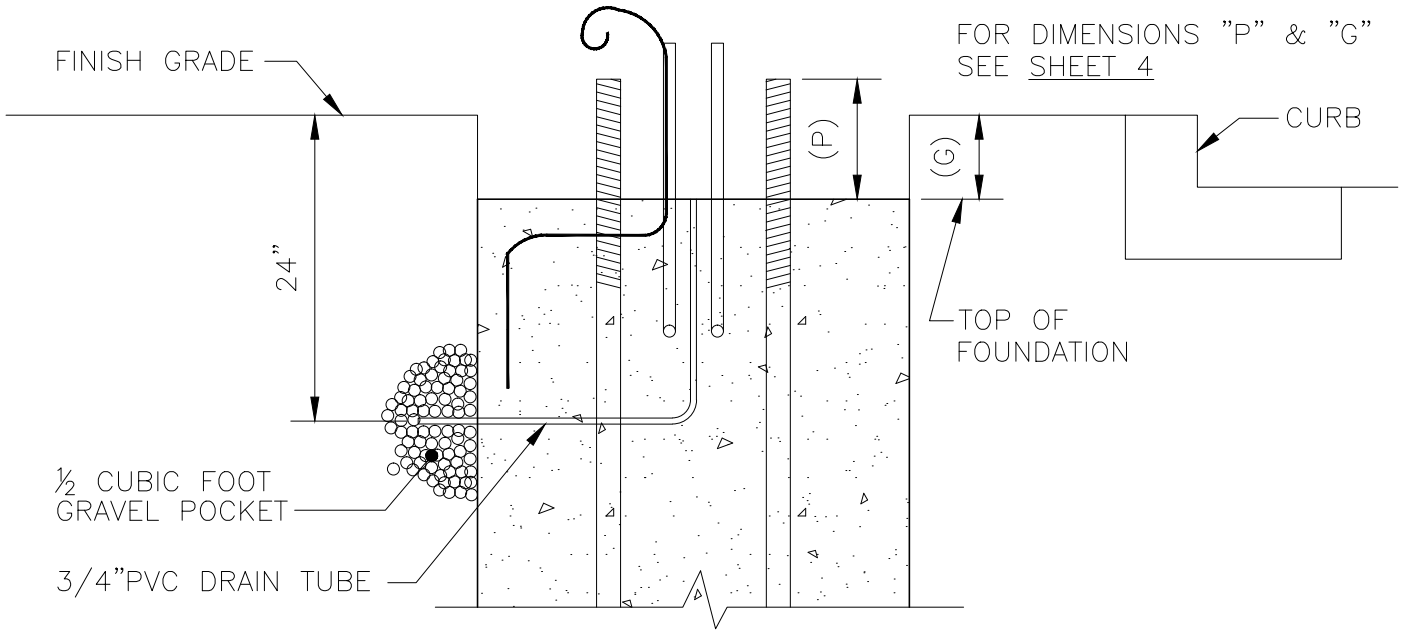

CHIEF SEATTLE CONDITION
TOP OF FOUNDATION DETAILS
USE ONLY WHERE NOTED ON DRAWINGS

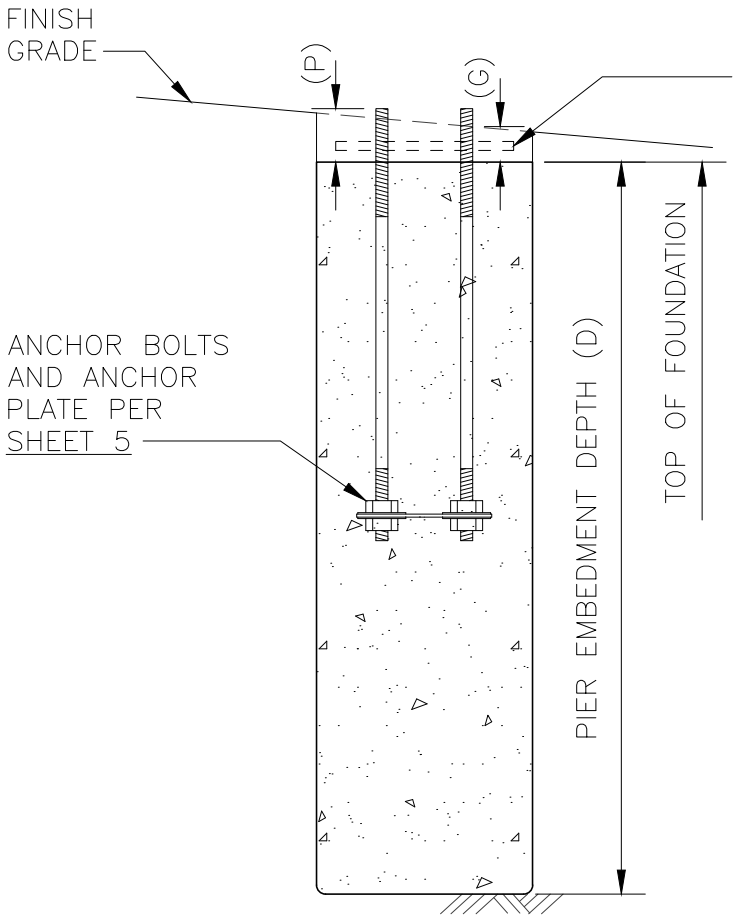

CHIEF SEATTLE CONDITION
INCLINED DETAILS
REBAR NOT SHOWN FOR CLARITY

DESIGNED: DPG	CHKD: DPG	King County	DEPARTMENT OF TRANSPORTATION TROLLEY STANDARDS STANDARD FOUNDATION (ANCHOR BASE STEEL POLE)	DATE: JULY 2008
DRAWN: TMB	SCALE: NONE			FILE
RECOMMENDED: DOW	CONTRACT:			DWG. NO. SA-213
APPROVED:				SHT 3 OF 7

ANCHOR BASE FOUNDATION SCHEDULE

FOUNDATION TYPE	POLE My STANDARD/ MAXIMUM (KIP–FT)	PIER EMBEDMENT DEPTH (D)		PIER DIAMETER (FEET)	REBAR REQUIREMENTS		BOLT ℄ CIRCLE ANCHOR	BOLT PROJ ANCHOR ONLY CHIEF SEATTLE	
		4 BLOWS PER FT	2 BLOWS PER FT		VERTICAL*	CONTINUOUS TIES		"P"	"G"
SA–213–B	110/180	9	14	3'–0"	8–#8	#3	18"	9"	6.5"
SA–213–D	180/270	10.5	16	3'–0"	12–#8	#3	20"	10"	7"
SA–213–F	330/400	13	19	3'–0"	12–#9	#3	22"	11.5"	8"
SA–213–H	600/600	15.5	21	3'–6"	14–#9	#3	24"	12"	8½"

*ADD (1) #8 VERTICAL FOR GROUNDING

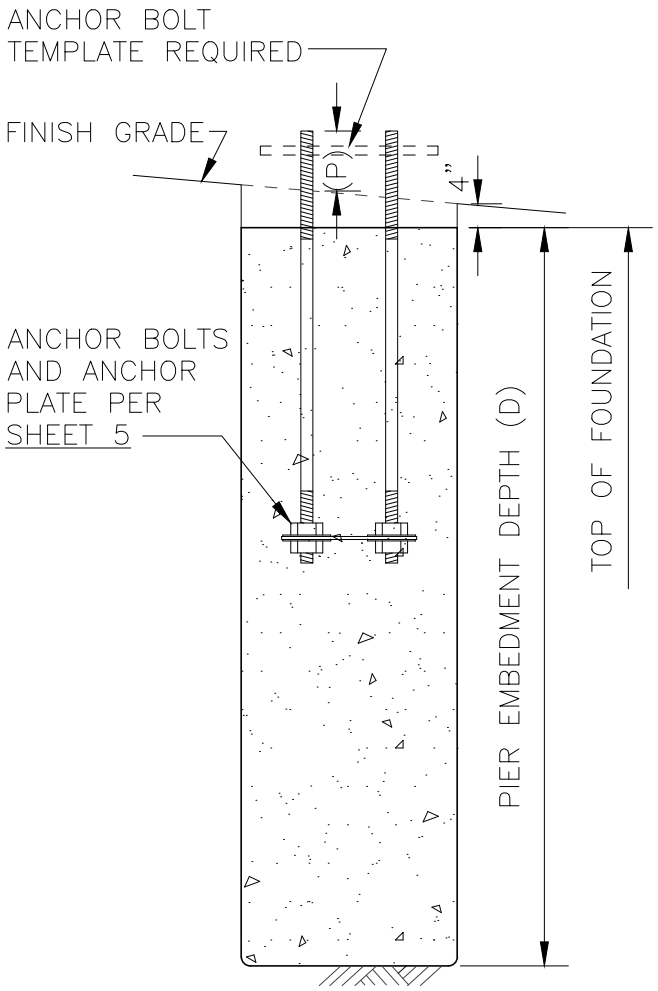

STANDARD CONDITION
INCLINED DETAILS
REBAR NOT SHOWN FOR CLARITY

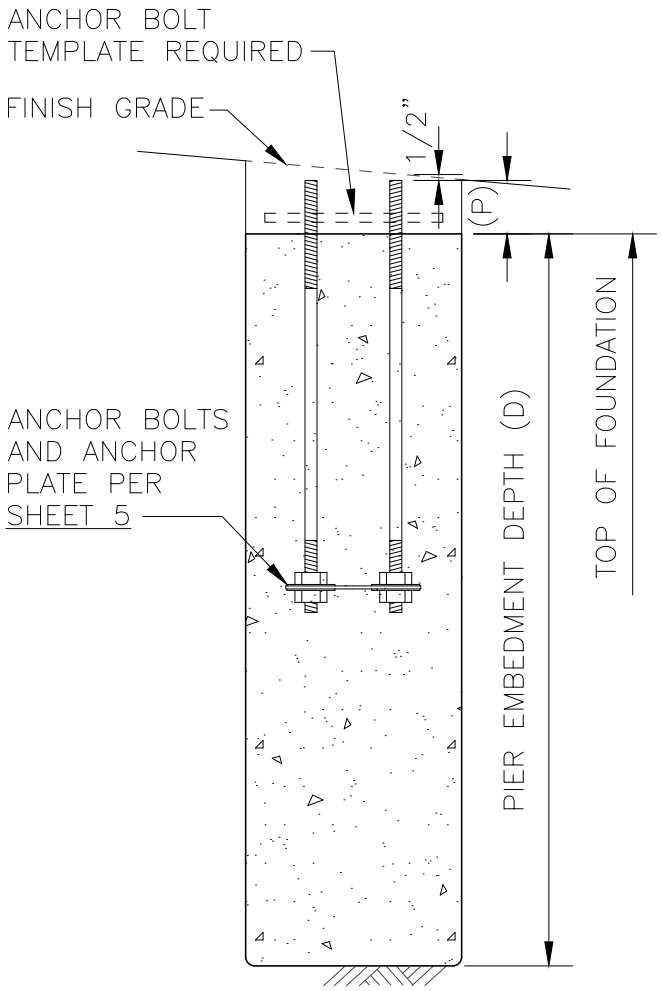

BURIED CONDITION
INCLINED DETAILS
REBAR NOT SHOWN FOR CLARITY

DESIGNED: DPG	CHKD: DPG	King County	DEPARTMENT OF TRANSPORTATION TROLLEY STANDARDS STANDARD FOUNDATION (ANCHOR BASE STEEL POLE)	DATE: DEC 2008
DRAWN: BFB	SCALE: NONE			FILE
RECOMMENDED:	CONTRACT:			DWG. NO. SA–213
APPROVED:				SHT 4 OF 7

FOUNDATION TYPE	ANCHOR BOLT DIAMETER (INCHES) (A)	ANCHOR PLATE DIMENSIONS (INCHES)					
		PLATE THICKNESS (B)	PLATE WIDTH (C)	BOLT HOLE (D)	CENTER HOLE (E)	CORNER RADIUS (F)	BOLT CIRCLE (G)
SA–213–B	1 3/4	3/8	16 X 16	1 7/8	12 1/2	1 5/8	18
SA–213–D	2	3/8	18 X 18	2 1/8	14	2	20
SA–213–F	2 1/2	3/8	20 X 20	2 5/8	15	2 1/4	22
SA–213–H	2 3/4	1/2	22 X 22	2 7/8	16.5	2 1/2	24

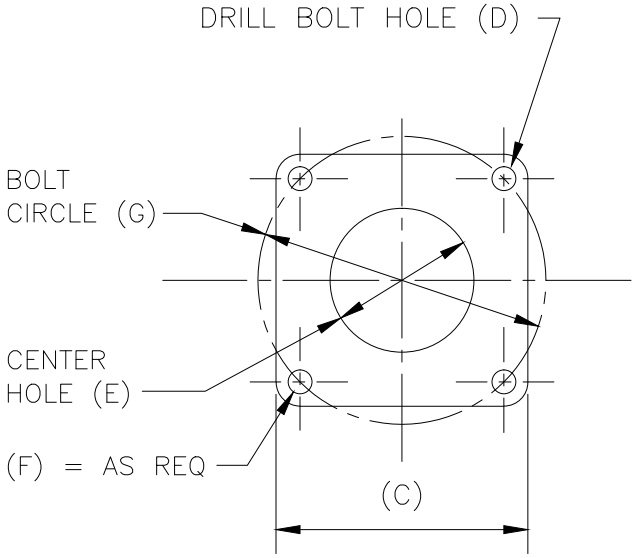

ANCHOR PLATE DETAIL

SEE GENERAL NOTES SHEETS 6 & 7

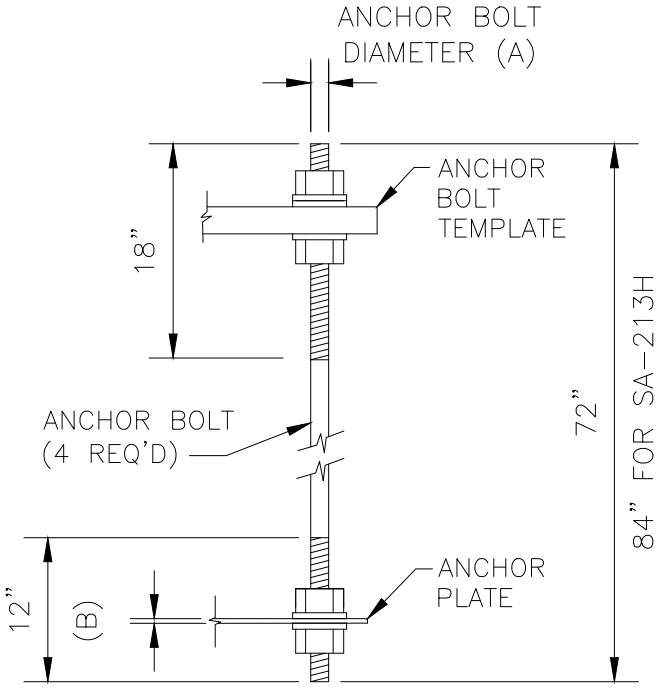

TYPICAL ANCHOR BOLT

COMPLETE WITH 4 NUTS 4 FLAT WASHERS & 1 LOCK WASHER.
SEE GENERAL NOTES/SHEETS 6 & 7

DESIGNED: DPG	CHKD: DPG	King County	DEPARTMENT OF TRANSPORTATION TROLLEY STANDARDS	DATE: JULY 2008
DRAWN: TMB	SCALE: NTS			FILE
RECOMMENDED:	CONTRACT:		STANDARD FOUNDATION (ANCHOR BASE STEEL POLE)	DWG. NO. SA–213
APPROVED:				SHT 5 OF 7

GENERAL NOTES

1. CONCRETE AND REINFORCING STEEL

   1.1 All work shall be done per Seattle Sidewalk and Street Paving and Restoration Rules and Regulations if in Street Right Of Way.

   1.2 Concrete shall be City of Seattle Class AX air entrained, 3/4" max aggregate, and with a minimum compressive strength of 4000 PSI at 28 days.

   1.3 All reinforcing bars shall be deformed billet steel conforming to ASTM A615 Grade 60.

   1.4 Minimum clear concrete cover shall be 3 inches.

   1.5 Reinforcing details and fabrication shall be as recommended in ACI 315 "Details & Detailing of Concrete Reinforcement."

   1.6 No construction joints shall be permitted.

2. ANCHOR PLATES, BOLTS, NUTS AND WASHERS

   2.1 Anchor bolts including nuts and flat washers shall conform to ASTM F1554–99 Grade 105 Class 2A including supplementary requirements S2, S3 and S5. Threads shall conform to the ANSI Standard B1.1 for UNC thread. Anchor bolts shall have 18 inches of thread on exposed end and 12 inches of thread on the embedded end.

   2.2 Anchor plates shall conform to ASTM A36.

3. GALVANIZING

   3.1 Anchor plates, anchor bolts, anchor bolt nuts and washers shall be hot–dip galvanized in conformance to ASTM A153 or ASTM A123.

4. SOIL

   4.1 Embedment depth is adequate for three times the working moment in cohesive soils of c=1000PSF and ø=0° or better and cohesionless soils of c=0PSF and ø=26° or better.

5. SUBMITTALS

   5.1 Reinforcing steel shop drawings and certificate of compliance.

   5.2 Concrete mix proportions, admixtures and slump.

   5.3 Anchor plate, anchor bolt, anchor bolt nuts and washers certificates of compliance.

   5.4 A test report shall be provided in accordance with ASTM F1554–99 and supplementary requirements.

(continued, sheet 7 of 7)

DESIGNED: DPG	CHKD: DPG	King County	DEPARTMENT OF TRANSPORTATION TROLLEY STANDARDS	DATE: JULY 2008
DRAWN: BFB	SCALE: NONE			FILE
RECOMMENDED:	CONTRACT:		STANDARD FOUNDATION (ANCHOR BASE STEEL POLE)	DWG. NO. SA–213
APPROVED:				SHT 6 OF 7

GENERAL NOTES

(continued from sheet 6 of 7)

6. INSPECTION

6.1 Concrete shall not be placed until the King County Project Representative has inspected the excavation, the grounding, the anchor bolts, and the placement of the reinforcing bar cage.

7. ANCHOR BOLT SETTING

7.1 Cover exposed anchor bolt threads and nuts with at least 3 layers of plastic tape before placing concrete.

7.2 Anchor bolt template shall by used temporarily at the top of anchor bolts for accurate positioning and aligning.

8. CONDUIT

8.1 Conduit from foundation shall be schedule 80 PVC. Conduit bends shall have a minimum radius of 12".

DESIGNED: DPG	CHKD: DPG	King County	DEPARTMENT OF TRANSPORTATION TROLLEY STANDARDS STANDARD FOUNDATION (ANCHOR BASE STEEL POLE)	DATE: JULY 2008
DRAWN: DOW	SCALE: NONE			FILE
RECOMMENDED:	CONTRACT:			DWG. NO. SA-213
APPROVED:				SHT 7 OF 7

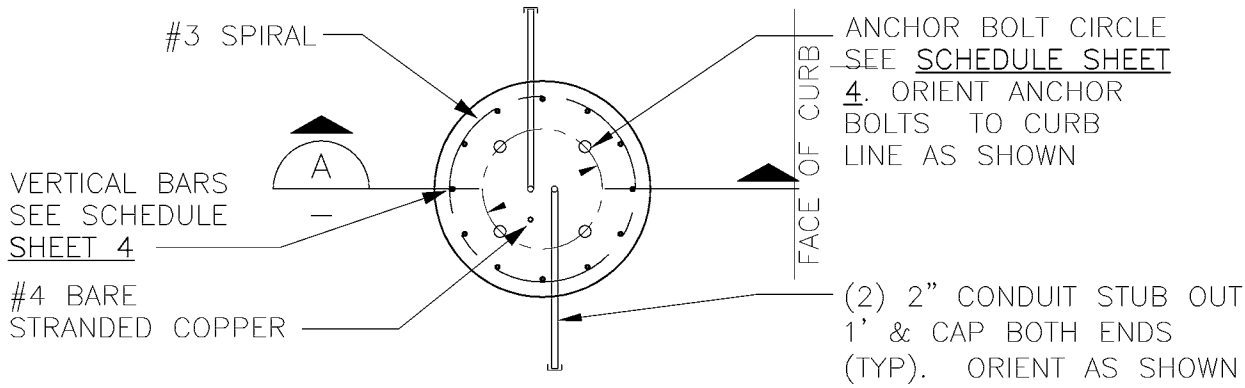

PLAN VIEW

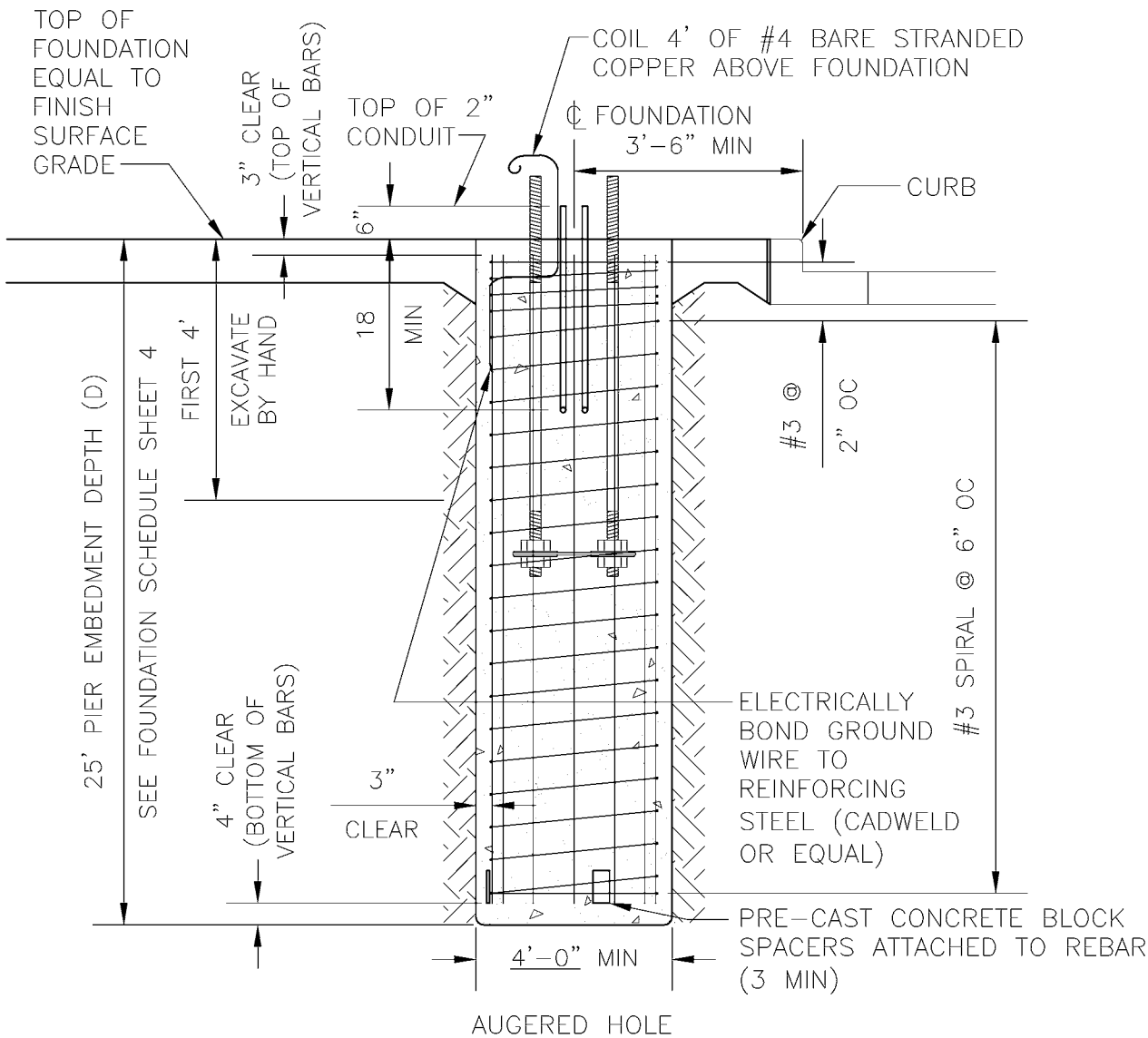

SECTION VIEW A/—

NOTES

1. SEE SHEETS 6 & 7 FOR GENERAL NOTES.

DESIGNED DPG	CHKD: AJW	King County	DEPARTMENT OF TRANSPORTATION TROLLEY STANDARDS SPECIAL FOUNDATION (ANCHOR BASE STEEL POLE)	DATE: JANUARY 04
DR: BFB	SCALE: NONE			FILE
RECOM.	CONTRACT:			DWG. NO. SA-213(S)
APPROVED				SHT 1 OF 7

V:\Library & Standards\Standards\Trolley\Details\SA-213S.1-7.dwg, SA-213S-1, 1/5/2007 12:23:17 PM

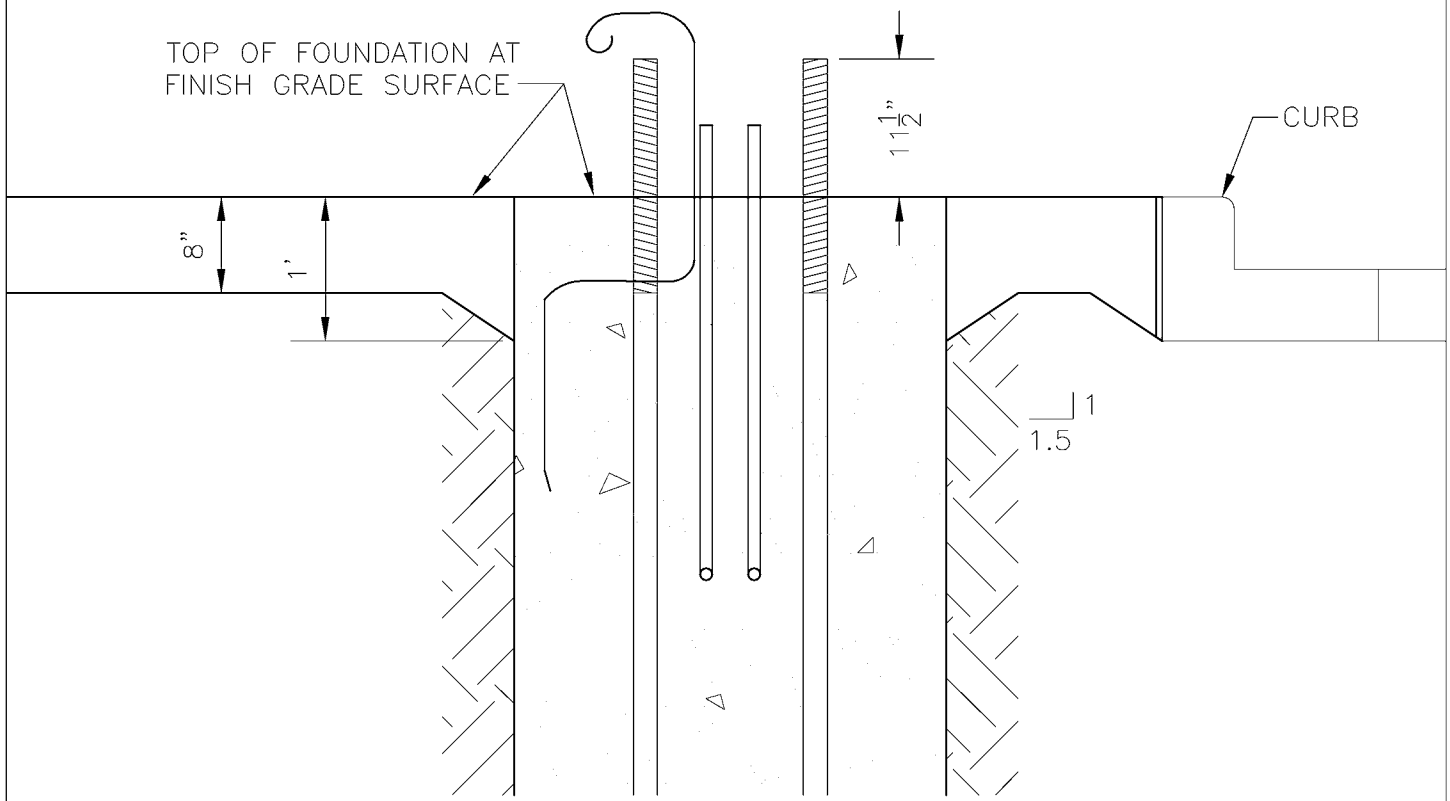

TYPICAL
TOP OF POLE FOUNDATION

DETAIL

SCALE: 3/4" = 1'-0"

V:\Library & Standards\Standards\Trolley\Details\SA-213S.1-7.dwg, SA-213-2, 1/5/2007 12:23:22 PM

DESIGNED: DPG	CHKD: DOW	King County	DEPARTMENT OF TRANSPORTATION TROLLEY STANDARDS	DATE: JANUARY 04
DR: BFB	SCALE: NONE		SPECIAL FOUNDATION FOR ANCHOR BASE STEEL POLE	FILE
RECOM.	CONTRACT:			DWG. NO. SA-213(S)
APPROVED				SHT 2 OF 7

ANCHOR BASE FOUNDATION SCHEDULE						
FOUNDATION TYPE	GROUND LINE M_g (LB–FT)	PIER EMBEDMENT DEPTH (D) (FEET)	REBAR REQUIREMENTS		ANCHOR BOLT CIRCLE	ANCHOR BOLT PROJ. "P"
			VERTICAL	CONTINUOUS TIES		
SA–213–(S)	480,000	25	16–#9	#3	22"	11.5"

V:\Library & Standards\Standards\Trolley\Details\SA-213S.1-7.dwg, SA-213-4, 1/5/2007 12:23:28 PM

DESIGNED DPG	CHKD:	King County	DEPARTMENT OF TRANSPORTATION TROLLEY STANDARDS	DATE: JANUARY 04
DR: AJW	SCALE: NONE			FILE
RECOM.	CONTRACT:		ANCHOR BASE FOUNDATION SCHEDULE	DWG. NO. SA–213(S)
APPROVED				SHT 4 OF 7

FOUNDATION TYPE	ANCHOR BOLT DIAM. (INCHES) (A)	ANCHOR PLATE DIMENSIONS (INCHES)					
		PLATE THICK. (B)	PLATE WIDTH (C)	BOLT HOLE (D)	CENTER HOLE (E)	CORNER RADIUS (F)	BOLT CIRCLE (G)
SA-213-(S)	2 1/2	1/2	20 X 20	2 5/8	15	2 1/4	22

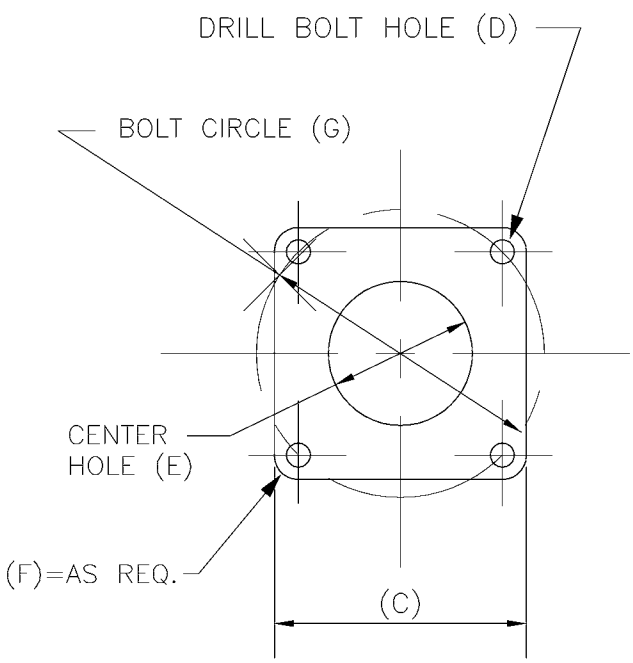

ANCHOR PLATE DETAIL

SEE GENERAL NOTES SHEET 6 & 7

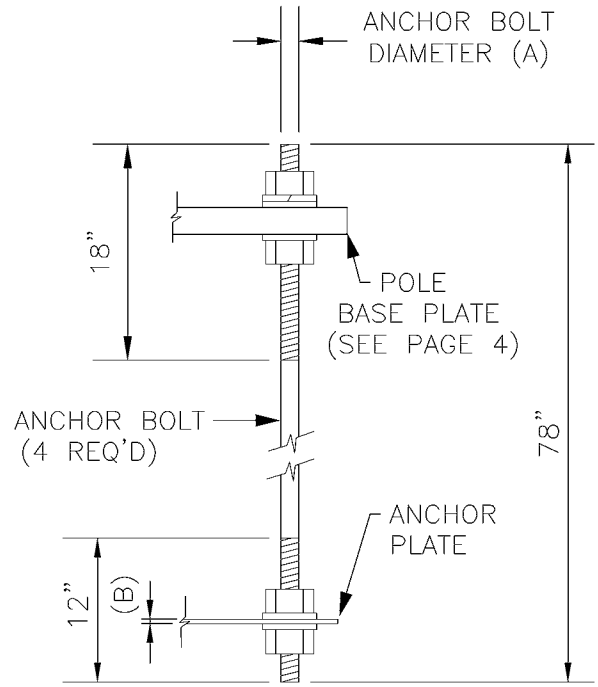

TYPICAL ANCHOR BOLT

COMPLETE WITH 4 NUTS
4 FLAT WASHERS & 1 LOCK WASHER
SEE GENERAL NOTES SHEET 6 & 7

DESIGNED DPG	CHKD:	King County	DEPARTMENT OF TRANSPORTATION TROLLEY STANDARDS	DATE: JANUARY 04
DR: AJW	SCALE: NTS		SPECIAL FOUNDATION (ANCHOR BASE STEEL POLE)	FILE
RECOM.	CONTRACT:			DWG. NO. SA-213(S)
APPROVED				SHT 5 OF 7

V:\Library & Standards\Standards\Trolley\Details\SA-213S.1-7.dwg, SA-213-5, 1/5/2007 12:23:34 PM

GENERAL NOTES

1. CONCRETE AND REINFORCING STEEL

1.1 All work shall be done per City of Seattle Board of Public Works Rules: Chapter 40.4 – Street and Sidewalk Pavement Opening and Restoration Rules if in Street Right Of Way.

1.2 Concrete shall be City of Seattle Class AX air entrained, 3/4" max aggregate, and with a minimum compressive strength of 4000 PSI at 28 days.

1.3 All reinforcing bars shall be deformed billet steel conforming to ASTM A615 Grade 60.

1.4 Minimum clear concrete cover shall be 3 inches.

1.5 Reinforcing details and fabrication shall be as recommended in ACI 315 "Details & Detailing of Concrete Reinforcement."

1.6 No construction joints shall be permitted.

2. ANCHOR PLATES, BOLTS, NUTS AND WASHERS

2.1 Anchor bolts including nuts and flat washers shall conform to ASTM F1554–99 Grade 105 Class 2A including supplementary requirements S2,S3,and S5. Threads shall conform to the ANSI Standard B1.1 for UNC thread. Anchor bolts shall have 18 inches of thread on exposed end and 12 inches of thread on the embedded end.

2.2 Anchor plates shall conform to ASTM A36.

3. GALVANIZING

3.1 Anchor plates, anchor bolts, anchor bolt nuts and washers shall be hot–dip galvanized in conformance to ASTM A153 or ASTM A123.

V:\Library & Standards\Standards\Trolley\Details\SA-213S.1-7.dwg, SA-213-6, 1/5/2007 12:23:41 PM

DESIGNED DPG	CHKD:	King County	DEPARTMENT OF TRANSPORTATION TROLLEY STANDARDS	DATE: JANUARY 04
DR: AJW	SCALE: NONE			FILE
RECOM.	CONTRACT:		SPECIAL FOUNDATION ANCHOR BASE STEEL POLE	DWG. NO. SA–213(S)
APPROVED				SHT 6 OF 7

GENERAL NOTES

4. SUBMITTALS

4.1 Reinforcing steel shop drawings and certificate of compliance.

4.2 Concrete mix proportions, admixtures and slump.

4.3 Anchor plate, anchor bolt, anchor bolt nuts and washers certificates of compliance.

4.4 A test report shall be provided in accordance with ASTM F1554–99 and supplementary requirements.

5. INSPECTION

5.1 Concrete shall not be placed until the Engineer has inspected the excavation, the grounding, the anchor bolts, and the placement of the reinforcing bar cage.

6. ANCHOR BOLT SETTING

6.1 Cover exposed anchor bolt threads and nuts with at least 3 layers of plastic tape before placing concrete.

6.2 Anchor bolt template shall by used temporarily at the top of anchor bolts for accurate positioning and aligning.

7. CONDUIT

7.1 Conduit from foundation shall be schedule 80 PVC. Conduit bends shall have a minimum radius of 12".

V:\Library & Standards\Standards\Trolley\Details\SA-213S.1-7.dwg, SA-213-7, 1/5/2007 12:23:49 PM

DESIGNED DPG	CHKD:	King County	DEPARTMENT OF TRANSPORTATION TROLLEY STANDARDS	DATE: JANUARY 04
DR: AJW	SCALE: NONE			FILE
RECOM.	CONTRACT:		STANDARD FOUNDATION (ANCHOR BASE STEEL POLE)	DWG. NO. SA–213(S)
APPROVED				SHT 7 OF 7

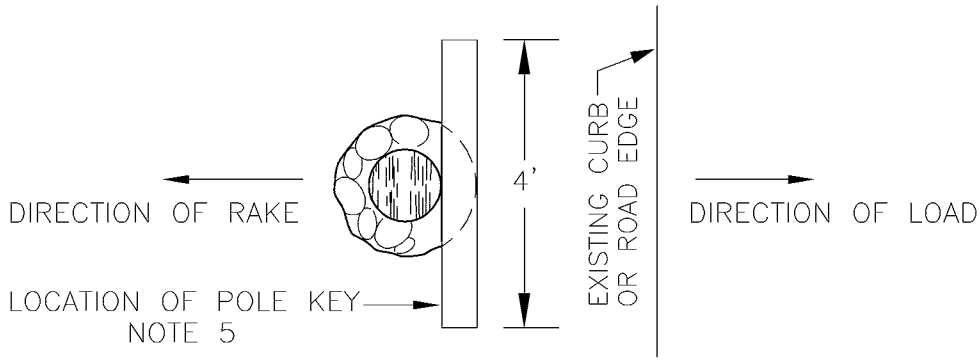

PLAN

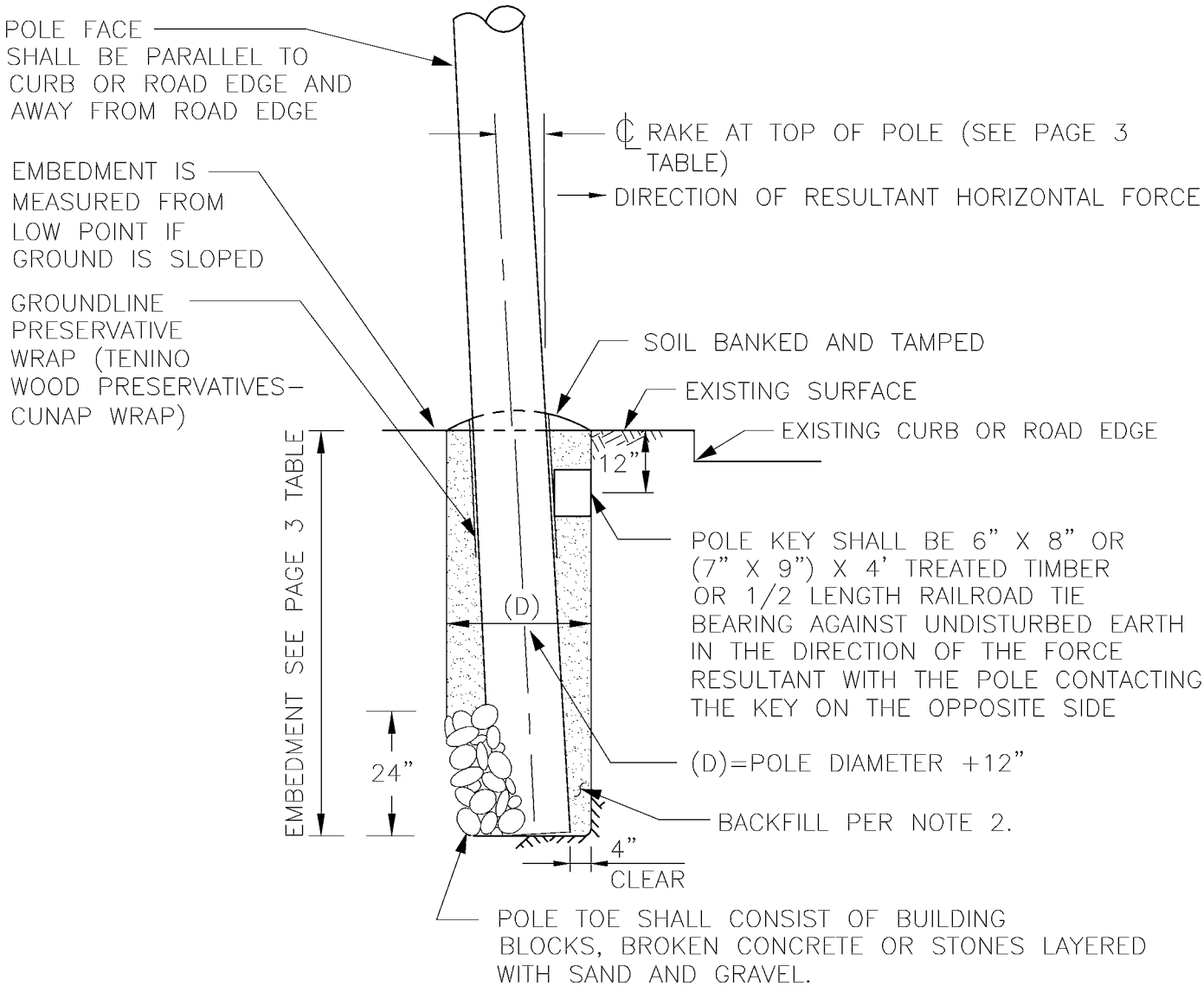

ELEVATION

NOTES

1. SEE SHEET 3 FOR GENERAL NOTES.

DESIGNED DPG	CHKD: DOW	King County	DEPARTMENT OF TRANSPORTATION TROLLEY STANDARDS	DATE: JUN 95
DR: TMB	SCALE: NONE		WOOD POLE SETTING STANDARD (WITHOUT SIDEWALK)	FILE
RECOM.	CONTRACT:			DWG. NO. SA–214
APPROVED				SHT 1 OF 3

V:\Library & Standards\Standards\Trolley\Details\SA-214.1-3.dwg, SA-214.1, 1/5/2007 12:23:58 PM

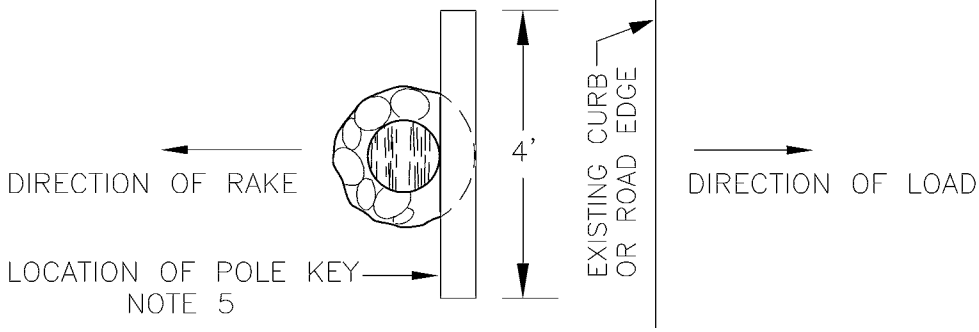

PLAN

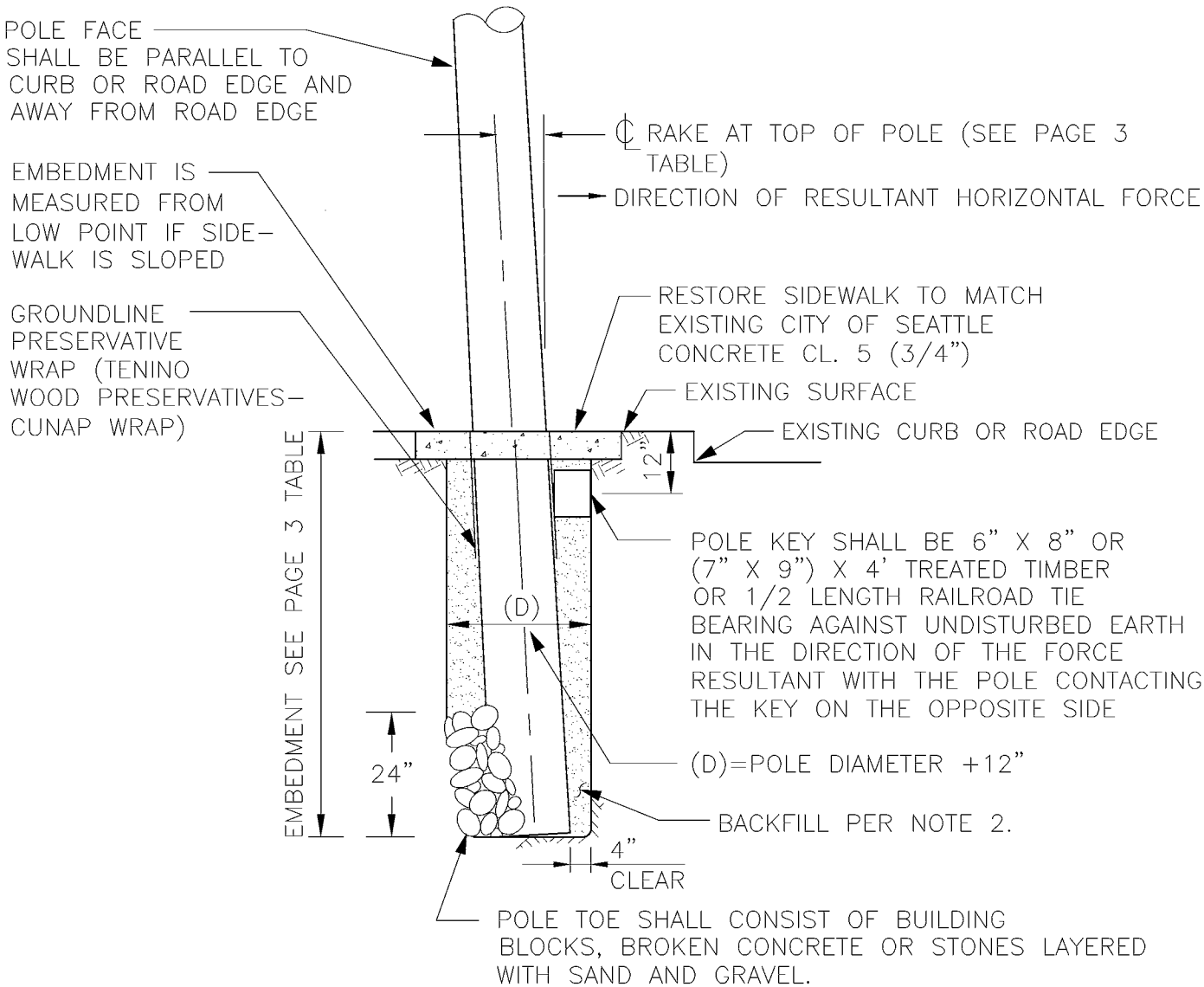

ELEVATION

NOTES

1. SEE SHEET 3 FOR GENERAL NOTES.

DESIGNED DPG	CHKD: DOW	King County	DEPARTMENT OF TRANSPORTATION TROLLEY STANDARDS	DATE: JUN 95
DR: TMB	SCALE: NONE			FILE
RECOM.	CONTRACT:		WOOD POLE SETTING STANDARD (WITH SIDEWALK)	DWG. NO. SA-214
APPROVED				SHT 2 OF 3

V:\Library & Standards\Standards\Trolley\Details\SA-214.1-3.dwg, SA-214.2, 1/5/2007 12:24:04 PM

NOTES:

1. THIS DETAIL APPLIES TO SOIL FREE OF PEAT, MUCK OR OTHER ORGANIC MATTER. SOILS HAVING THE ABOVE MENTIONED QUALITIES SHALL REQUIRE SPECIAL INVESTIGATION.

2. SOIL USED FOR BACKFILL SHALL BE WELL GRADED SAND AND GRAVEL MIX FREE FROM SOD, GRASS, WEEDS AND ALL SIMILAR ORGANIC MATERIALS AND SUITABLY DRY FOR COMPACTION. SAND AND GRAVEL MIX CAN BE EITHER EXCAVATED SOIL OR IMPORTED.

3. ALL WATER IN HOLE SHALL BE REMOVED BEFORE SETTING AND TAMPING THE HOLE.

4. IN BACKFILLING, THE SAND AND GRAVEL MIX SHALL BE REPLACED IN EVEN LAYERS APPROXIMATELY 6" THICK AND FIRMLY AND THROUGHLY TAMPED TO A DRY DENSITY NOT LESS THAN THE NATURAL IN-PLACE DRY DENSITY OF THE SURROUNDING EARTH. IF HAND TAMPING BARS ARE USED, NOT MORE THAN ONE PERSON SHALL SHOVEL WHILE THREE PERSONS ARE TAMPING.

5. POLE KEY SHALL BE INSTALLED PERPENDICULAR TO DIRECTION OF LOAD, AND MAY NOT BE PARALLEL TO EXISTING CURB OR ROAD EDGE. SEE PLAN EXAMPLES BELOW.

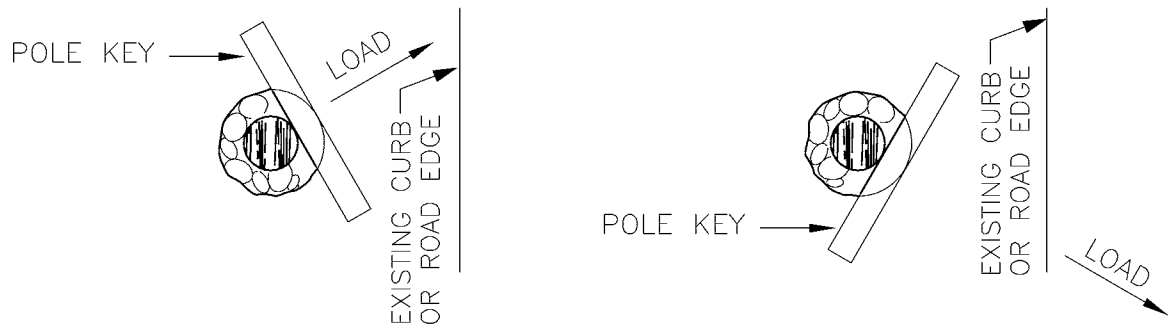

6. DELETE POLE KEY & POLE TOE IF POLE IS GUYED WITH SA-231, SA-232, OR SA-233.

EMBEDMENT AND RAKE SCHEDULE

POLE LENGTH (ft)	EMBEDMENT (ft)	RAKE		
		UNGUYED	GUYED	BRACKET ARM
35	8'-0"	17"	7"	7"
40	8'-0"	20"	8"	8"

DESIGNED DPG	CHKD: DOW	King County	DEPARTMENT OF TRANSPORTATION TROLLEY STANDARD	DATE: JUN 95
DR: TMB	SCALE: NONE		WOOD POLE SETTING STANDARD	FILE
RECOM.	CONTRACT:			DWG. NO. SA-214
APPROVED				SHT 3 OF 3

V:\Library & Standards\Standards\Trolley\Details\SA-214.1-3.dwg, SA-214.3, 1/5/2007 12:24:11 PM

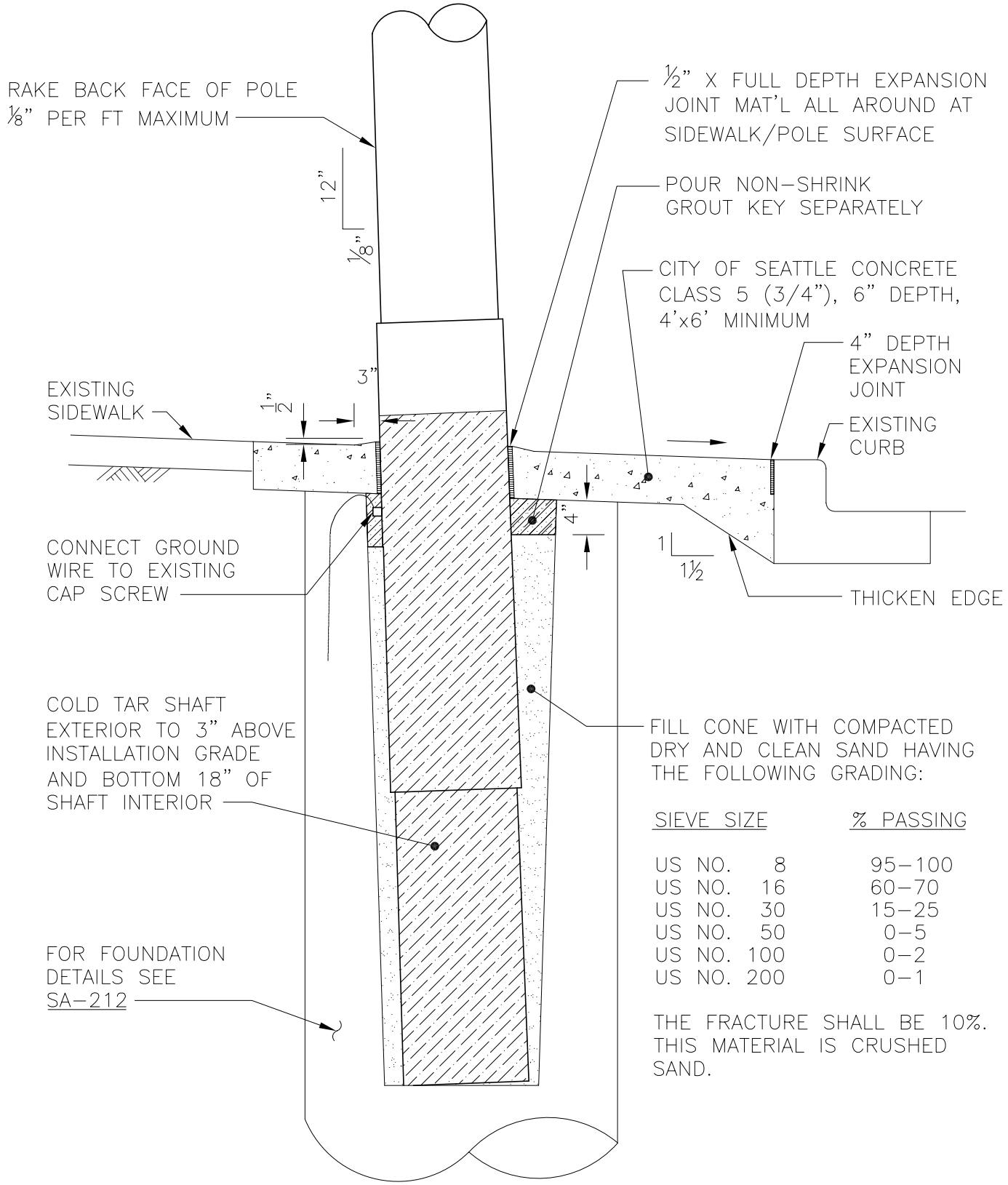

SIEVE SIZE	% PASSING
US NO. 8	95-100
US NO. 16	60-70
US NO. 30	15-25
US NO. 50	0-5
US NO. 100	0-2
US NO. 200	0-1

THE FRACTURE SHALL BE 10%. THIS MATERIAL IS CRUSHED SAND.

DESIGNED A WOLAK	CHKD: D GREER	King County	METRO TRANSIT DIVISION TROLLEY STANDARDS EMBEDDED STEEL POLE INSTALLATION WITH SIDEWALK	DATE: JUNE 2008
DR: B FARISSB	SCALE: NONE			FILE
RECOM.	IBIS NO:			DWG. NO. SA-215
APPROVED J DAVIS	CONTRACT NO:			SHT 1 OF 3

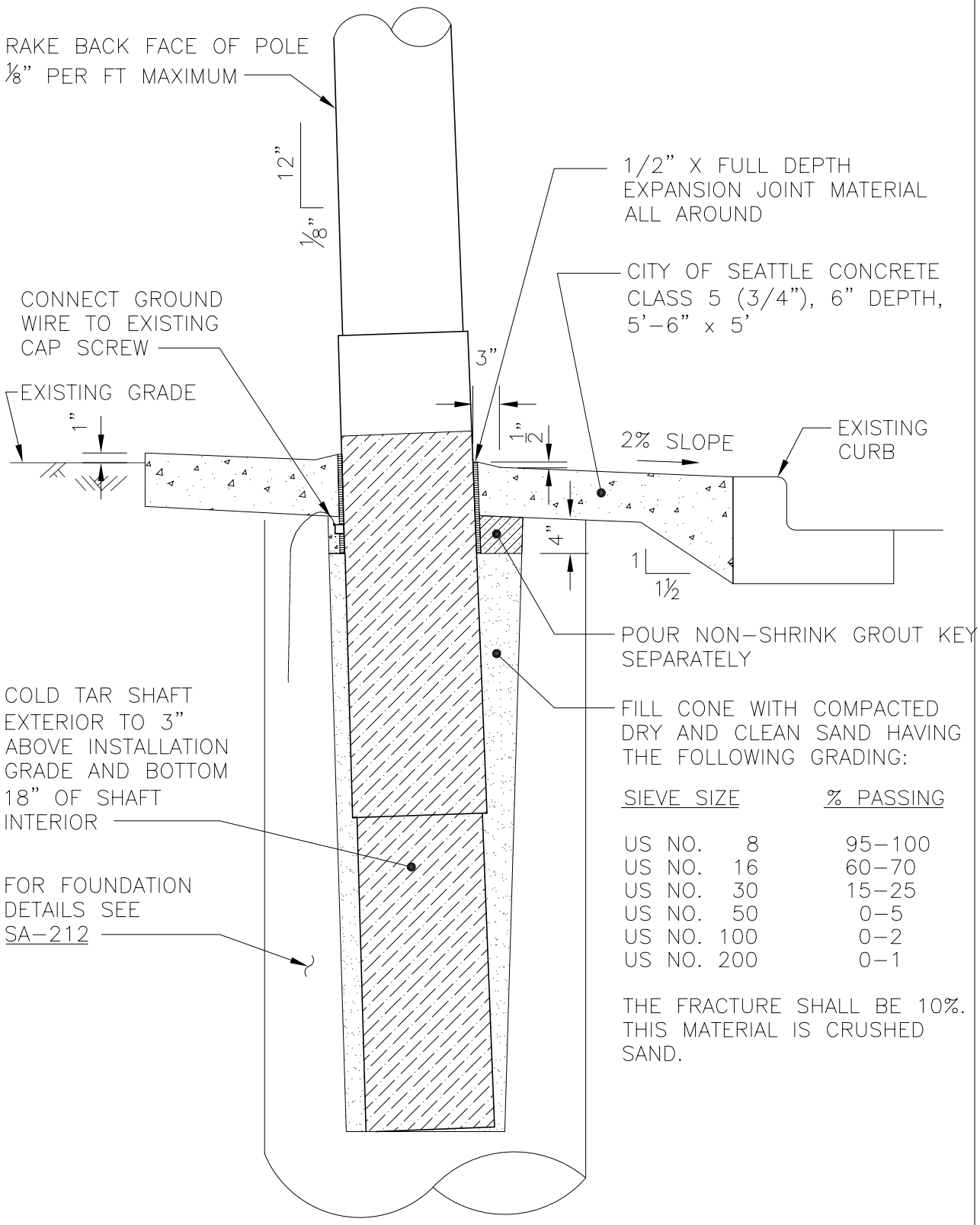

SIEVE SIZE	% PASSING
US NO. 8	95-100
US NO. 16	60-70
US NO. 30	15-25
US NO. 50	0-5
US NO. 100	0-2
US NO. 200	0-1

THE FRACTURE SHALL BE 10%. THIS MATERIAL IS CRUSHED SAND.

DESIGNED A WOLAK	CHKD: D GREER	King County	METRO TRANSIT DIVISION TROLLEY STANDARDS EMBEDDED STEEL POLE INSTALLATION WITHOUT SIDEWALK	DATE: JUNE 2008
DR: B FARISSB	SCALE: NONE			FILE
RECOM.	IBIS NO:			DWG. NO. SA-215
APPROVED J DAVIS	CONTRACT NO:			SHT 2 OF 3

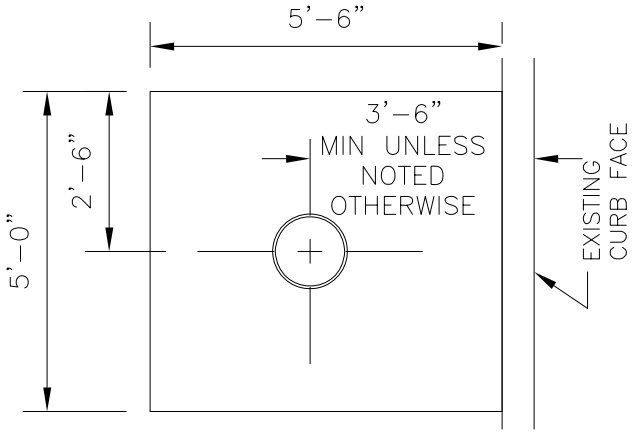

NO SIDEWALK CONDITION

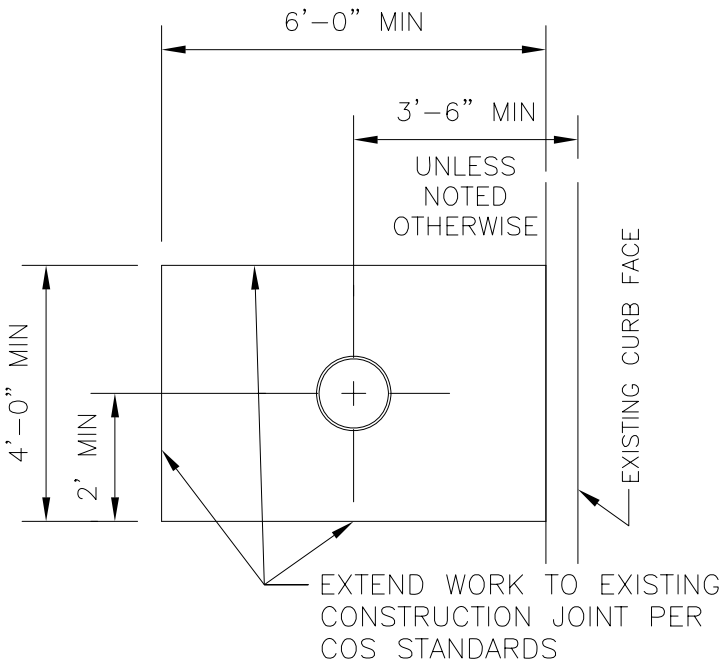

EXISTING SIDEWALK CONDITION

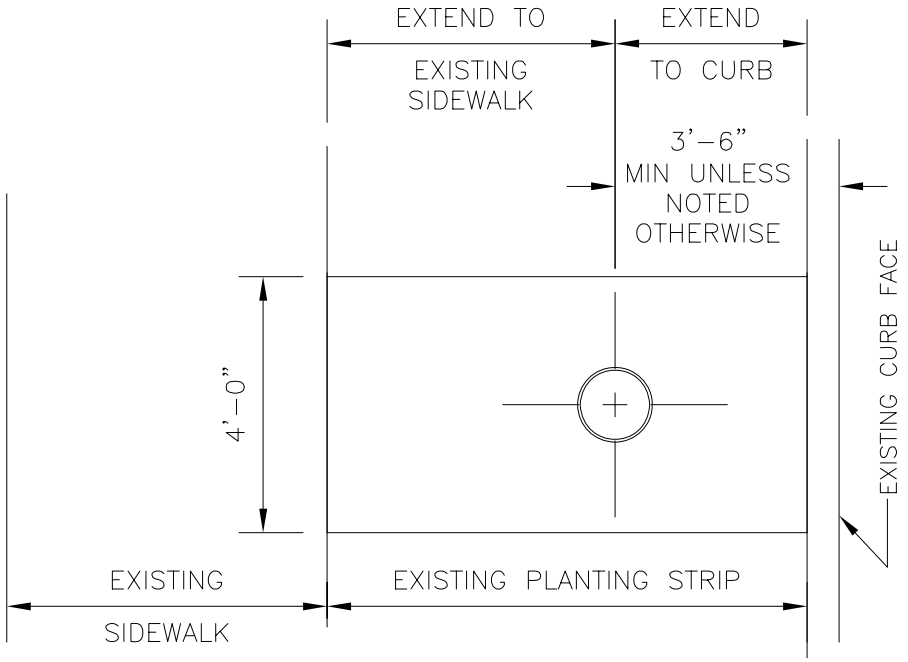

EXISTING SIDEWALK & PLANTING STRIP CONDITION

DESIGNED A WOLAK	CHKD: D GREER	King County	METRO TRANSIT DIVISION TROLLEY STANDARDS	DATE: APRIL 2008
DR: B FARISSB	SCALE: NONE			FILE
RECOM.	IBIS NO:		EMBEDDED STEEL POLE INSTALLATION	DWG. NO. SA–215
APPROVED J DAVIS	CONTRACT NO:			SHT 3 OF 3

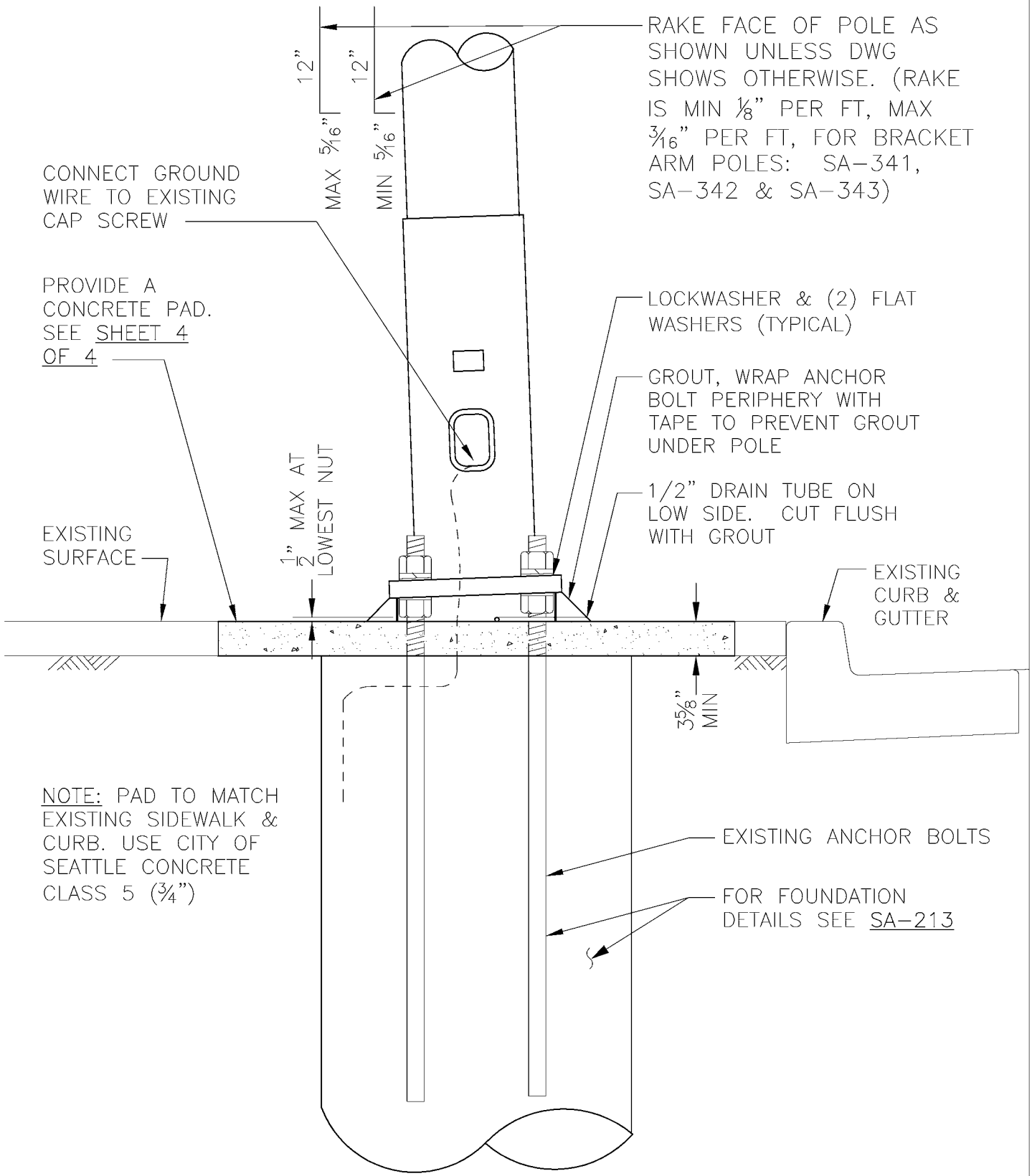

STANDARD CONDITION

ALL FOUNDATIONS SHALL BE THIS TYPE, UNLESS NOTED OTHERWISE ON DRAWINGS

DESIGNED DPG	CHKD: DOW	King County	METRO TRANSIT DIVISION TROLLEY STANDARDS ANCHOR BASE STEEL POLE INSTALLATION	DATE: JUNE 97
DR: CMS	SCALE: NONE			FILE
RECOM.	IBIS NO:			DWG. NO. SA-216
APPROVED	CONTRACT NO:			SHT 1 OF 4

Plotted: V:\Library & Standards\Standards\Trolley\Details\Sa-216.1-4.dwg, SA-216.1, 1/5/2007 12:24:31 PM

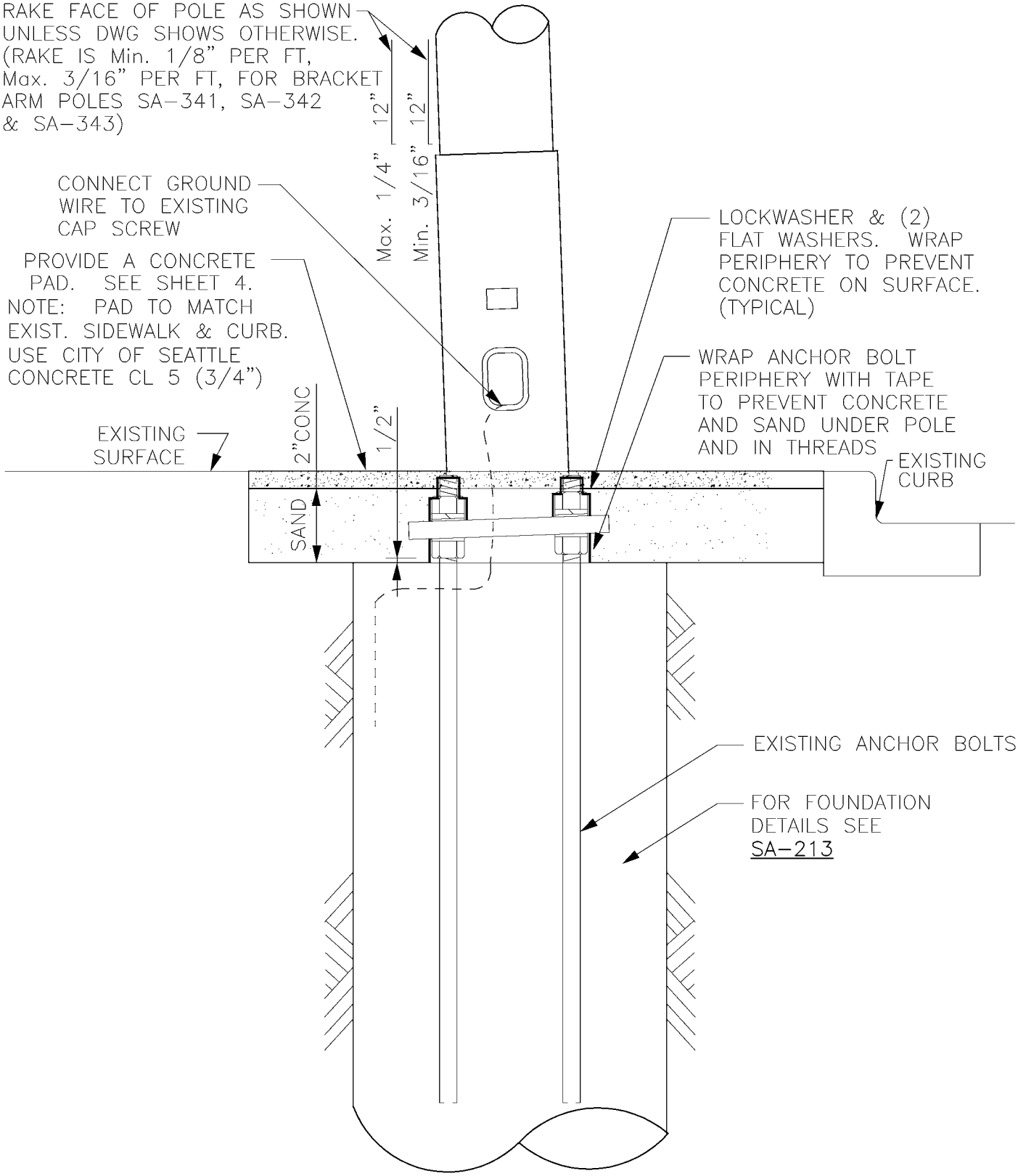

BURIED CONDITION

USE ONLY WHERE NOTED ON DWGS

DESIGNED DPG	CHKD: DOW	King County	METRO TRANSIT DIVISION TROLLEY STANDARDS	DATE: JULY 97
DR: CMS	SCALE: NONE			FILE
RECOM.	IBIS NO:		ANCHOR BASE STEEL POLE INSTALLATION	DWG. NO. SA-216
APPROVED MB	CONTRACT NO:			SHT 2 OF 4

Plotted: V:\Library & Standards\Standards\Trolley\Details\Sa-216.1-4.dwg, SA-216.2, 1/5/2007 12:24:36 PM

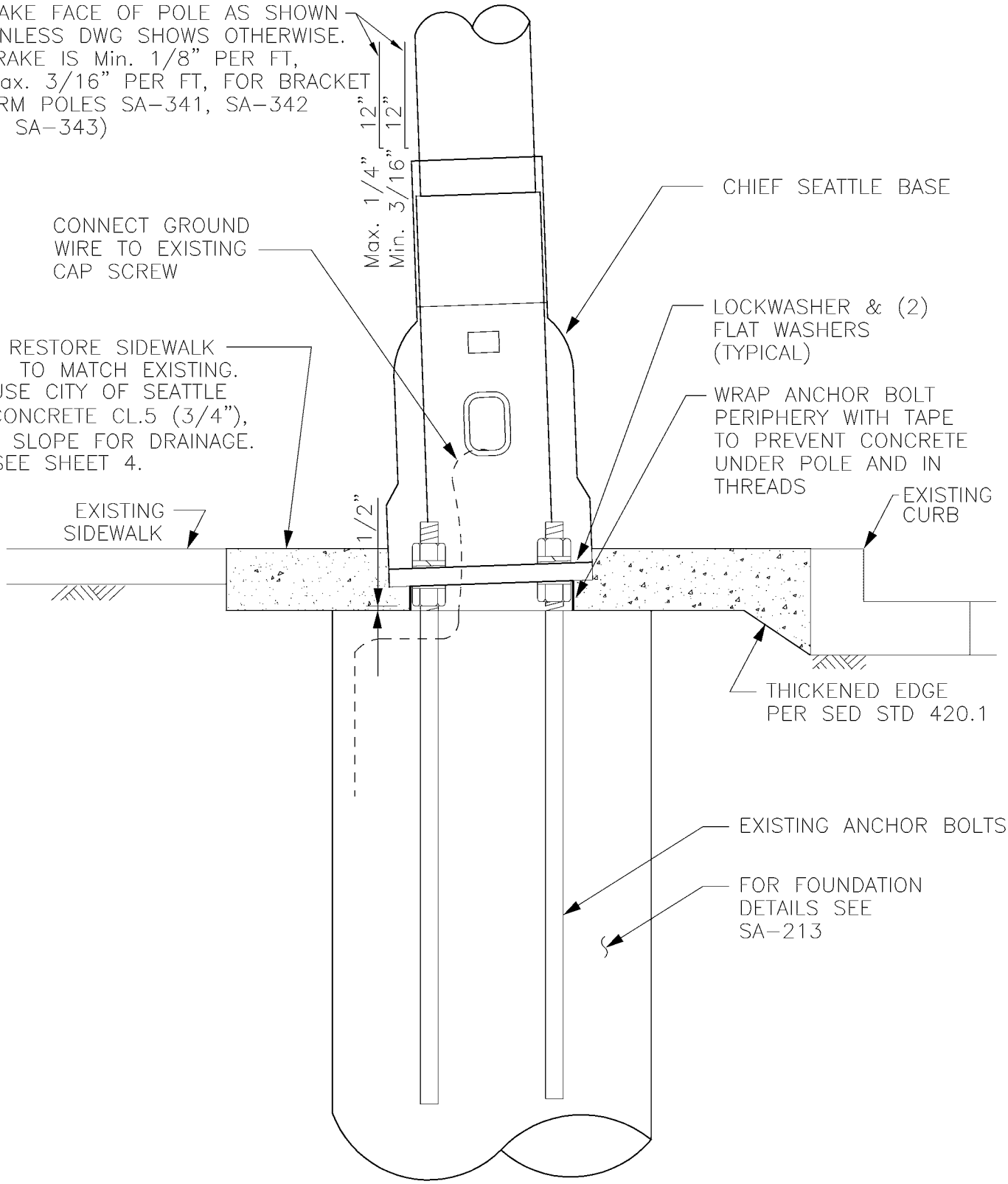

CHIEF SEATTLE CONDITION

USE ONLY WHERE NOTED ON DWGS

DESIGNED DPG	CHKD: DOW	King County	METRO TRANSIT DIVISION TROLLEY STANDARDS	DATE: JULY 97
DR: CMS	SCALE: NONE			FILE
RECOM.	IBIS NO:		ANCHOR BASE STEEL POLE INSTALLATION	DWG. NO. SA-216
APPROVED MB	CONTRACT NO:			SHT 3 OF 4

Plotted: V:\Library & Standards\Standards\Trolley\Details\Sa-216.1-4.dwg, SA-216.3, 1/5/2007 12:24:41 PM

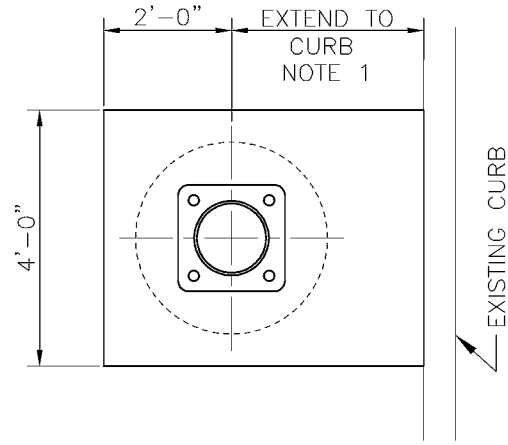

NO SIDEWALK CONDITION

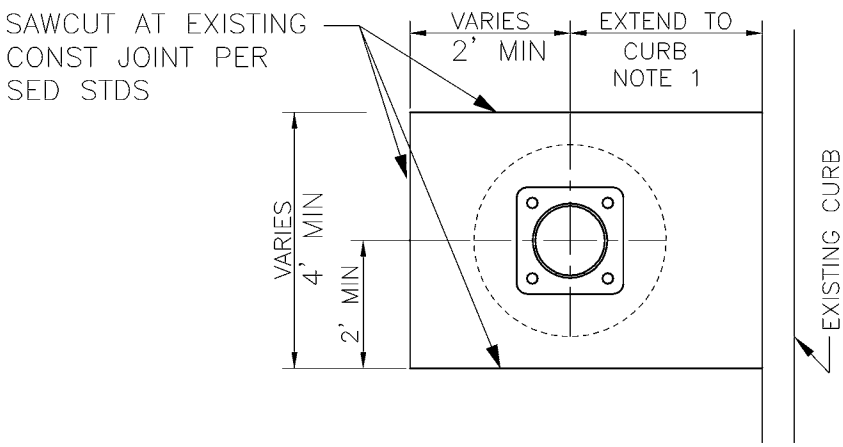

EXISTING SIDEWALK CONDITION

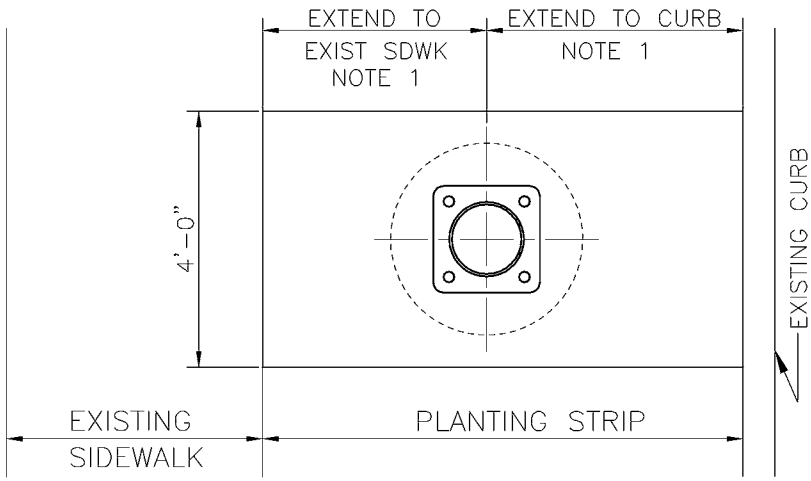

EXISTING SIDEWALK & PLANTING STRIP CONDITION

NOTE 1: 2 FT MIN DIMENSION MAY BE USED IF DIMENSION EXCEEDS 6 FT.

DESIGNED DPG	CHKD: DOW	King County	METRO TRANSIT DIVISION TROLLEY STANDARDS	DATE: JAN 97
DR: CMS	SCALE: NONE			FILE
RECOM.	IBIS NO:		ANCHOR BASE STEEL POLE INSTALLATION	DWG. NO. SA-216
APPROVED MB	CONTRACT NO:			SHT 4 OF 4

Plotted: V:\Library & Standards\Standards\Trolley\Details\Sa-216.1-4.dwg, SA-216.4, 1/5/2007 12:24:45 PM

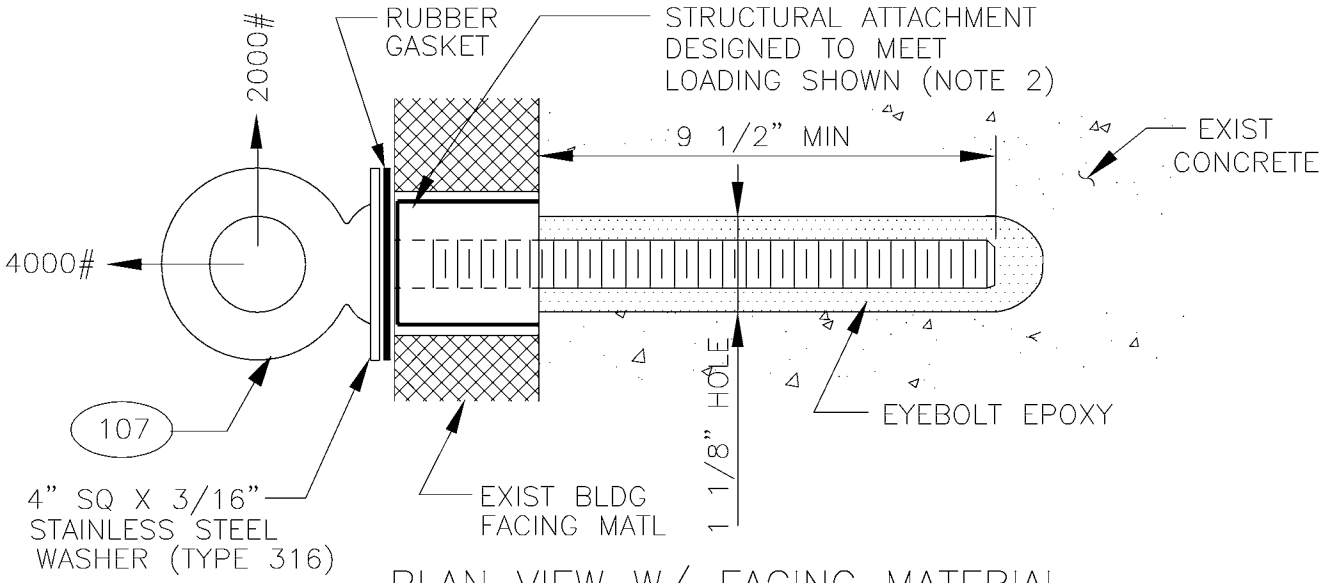

PLAN VIEW W/ FACING MATERIAL

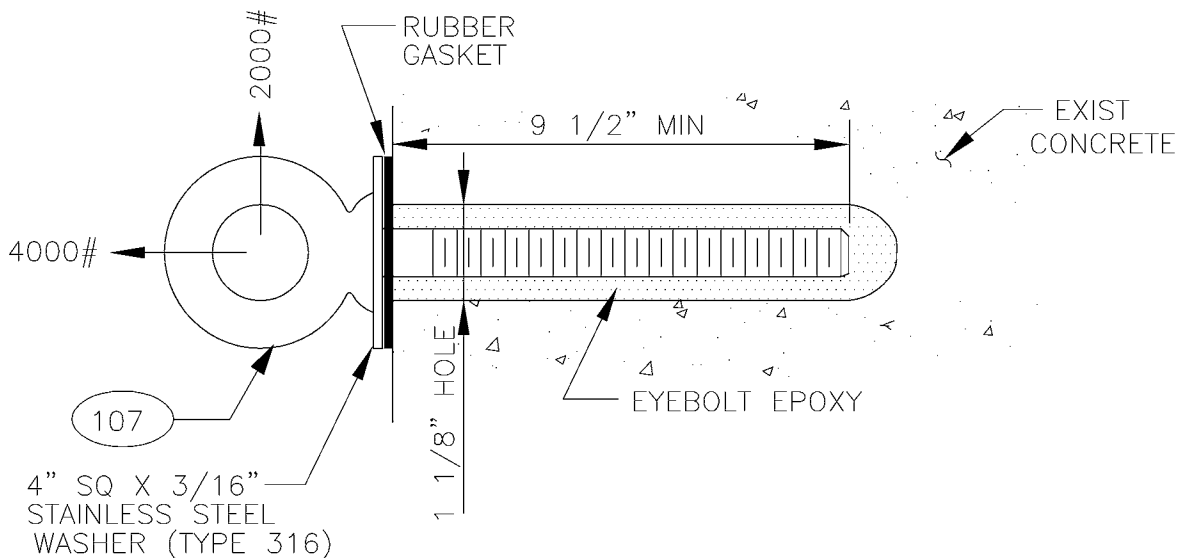

PLAN VIEW

NOTES:

1. INSTALL EYEBOLT EYE IN A HORIZONTAL ORIENTATION.
2. USE ITW RAMSET/REDHEAD EPCON EPOXY ANCHORING SYSTEM TO SET THE EYEBOLT. AN EPCON E101 HAND TOOL INJECTOR WITH AN E24 NOZZLE SHALL BE USED TO INJECT CERAMIC 6 EPOXY. INSTALL PER THE MANUFACTURES RECOMMENDATIONS.
3. TO PREVENT SPALLING, DEFLECTION RESULTING FROM SHEAR LOADING SHALL NOT ALLOW THE EYEBOLT TO CONTACT BUILDING FACING MATERIAL.
4. EYEBOLT SHOULDER SHALL BE SEATED.
5. A TWO FOOT MINIMUM SPACING IS REQUIRED BETWEEN EYEBOLTS.

DESIGNED DPG	CHKD: DOW	King County	DEPARTMENT OF TRANSPORTATION TROLLEY STANDARDS	DATE: JAN 98
DR: TMB	SCALE: NONE		BLDG EYEBOLT INSTALLATION (EXISTING CONCRETE STRUCTURE)	FILE
RECOM.	CONTRACT:			DWG. NO. SA-221
APPROVED				SHT 1 OF 5

V:\Library & Standards\Standards\Trolley\Details\SA-221.1-5.dwg, SA-221.1, 1/5/2007 12:24:51 PM

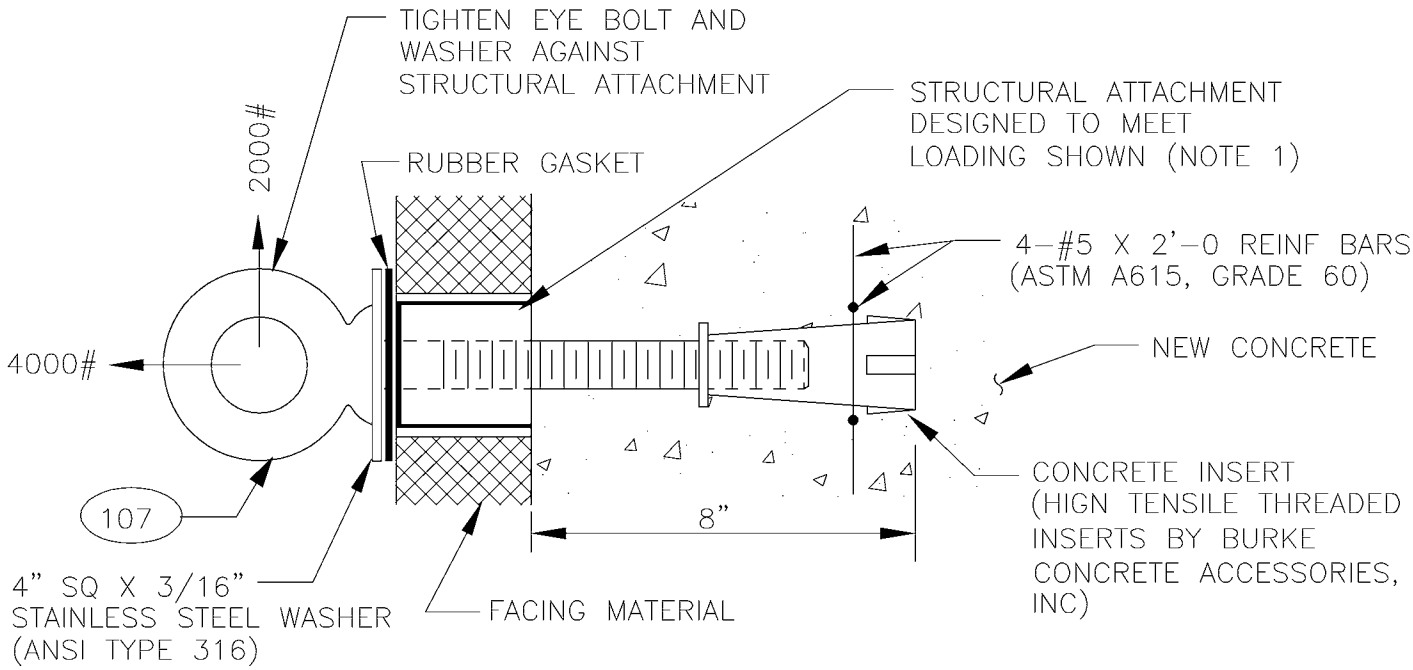

PLAN VIEW W/FACING

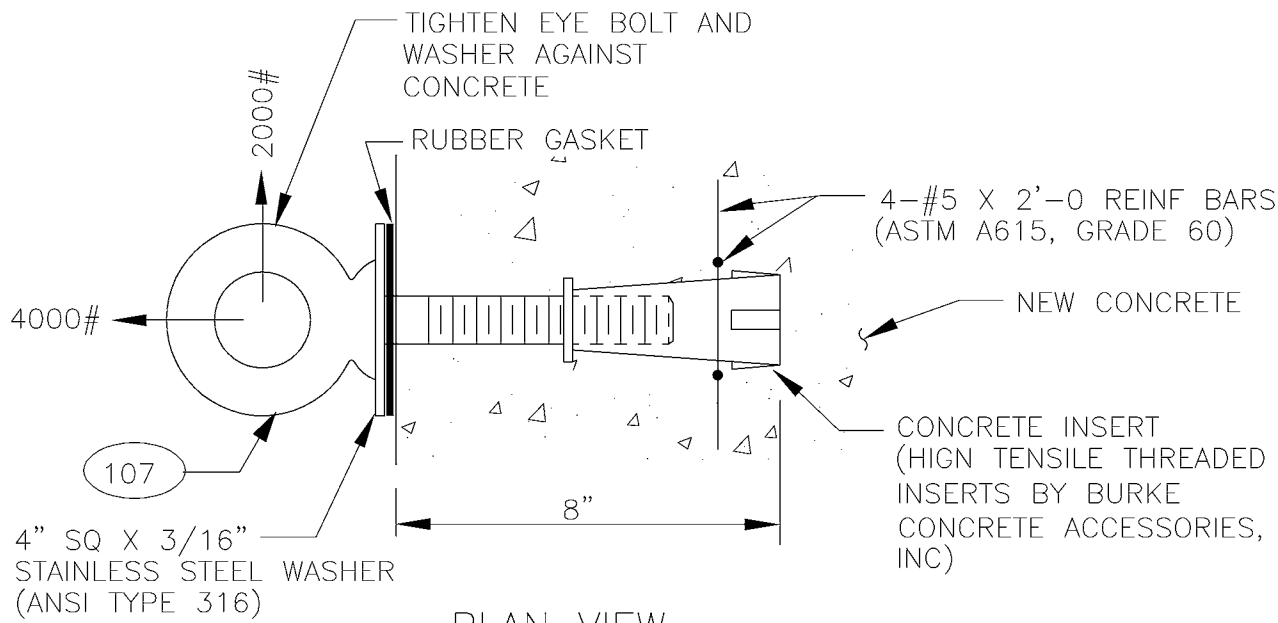

PLAN VIEW

NOTES:

1. TO PREVENT SPALLING, DEFLECTION RESULTING FROM SHEAR LOADING SHALL NOT ALLOW THE EYEBOLT TO CONTACT BUILDING FACING MATERIAL.
2. INSTALL EYEBOLT EYE IN A HORIZONTAL ORIENTATION.
3. A TWO FOOT MINIMUM SPACING IS REQUIRED BETWEEN EYEBOLTS.

DESIGNED DPG	CHKD: DOW	King County	DEPARTMENT OF TRANSPORTATION TROLLEY STANDARDS	DATE: JUN 97
DR: TMB	SCALE: NONE			FILE
RECOM.	CONTRACT:		BLDG EYEBOLT INSTALLATION (NEW CONCRETE STRUCTURE)	DWG. NO. SA-221
APPROVED				SHT 2 OF 5

V:\Library & Standards\Standards\Trolley\Details\SA-221.1-5.dwg, SA-221.2, 1/5/2007 12:24:56 PM

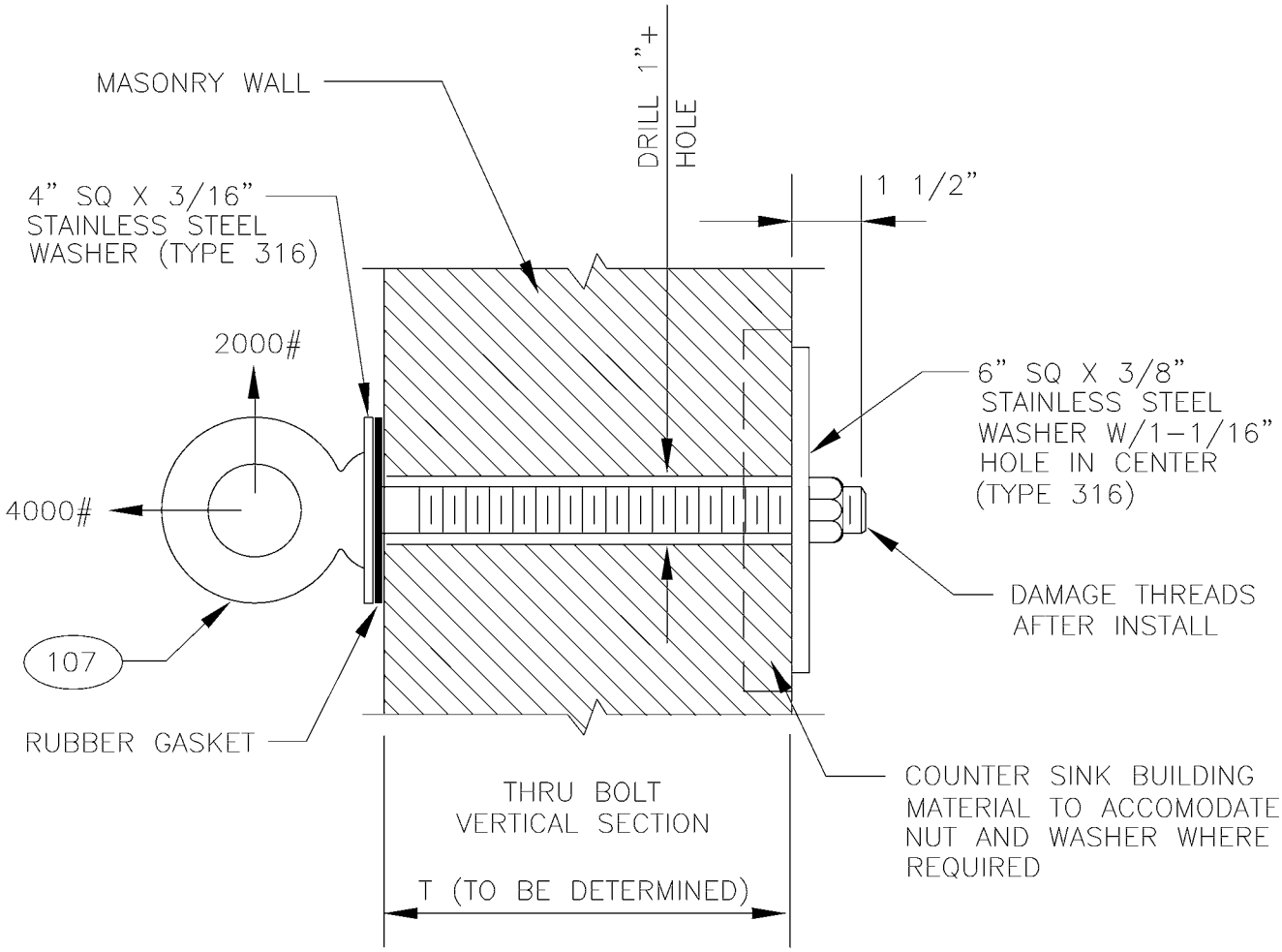

PLAN VIEW

NOTES:

1. A TWO FOOT MINIMUM SPACING IS REQUIRED BETWEEN EYEBOLTS.
2. INSTALL EYEBOLT EYE IN A HORIZONTAL ORIENTATION.

V:\Library & Standards\Standards\Trolley\Details\SA-221.1-5.dwg, SA-221.3, 1/5/2007 12:25:01 PM

DESIGNED DPG	CHKD: DOW	King County	DEPARTMENT OF TRANSPORTATION TROLLEY STANDARDS	DATE: JUN 97
DR: TMB	SCALE: NONE			FILE
RECOM.	CONTRACT:		BLDG EYEBOLT INSTALLATION (MASONRY STRUCTURE)	DWG. NO. SA-221
APPROVED				SHT 3 OF 5

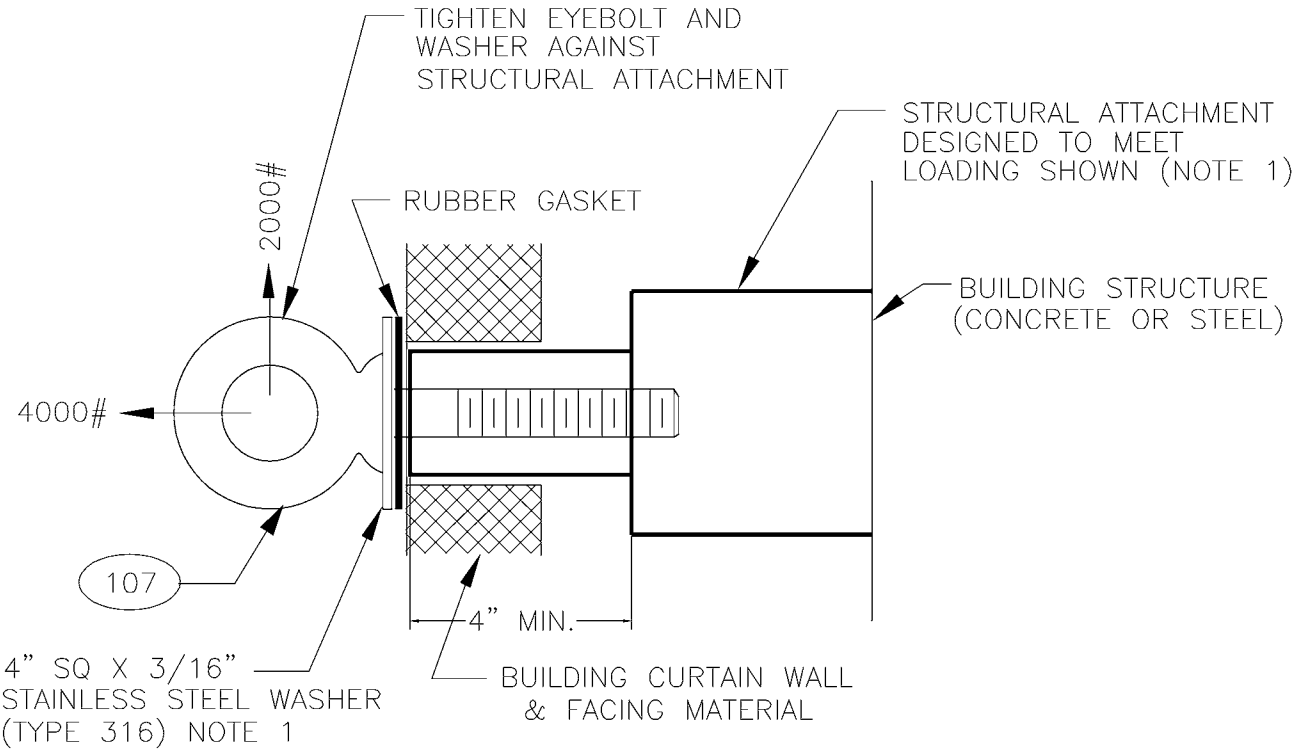

PLAN VIEW

NOTES:

1. TO PREVENT BREAKAWAY, DEFLECTION RESULTING FROM SHEAR FORCE SHALL NOT ALLOW THE STRUCTURAL ATTACHMENT TO CONTACT EXISTING BUILDING FACING MATERIAL.
2. INSTALL EYEBOLT EYE IN A HORIZONTAL ORIENTATION.
3. A TWO FOOT MINIMUM SPACING IS REQUIRED BETWEEN EYEBOLTS.

DESIGNED DPG	CHKD: DOW	King County	DEPARTMENT OF TRANSPORTATION TROLLEY STANDARDS	DATE: JUN 97
DR: TMB	SCALE: NONE			FILE
RECOM.	CONTRACT:		BLDG EYEBOLT INSTALLATION (CURTAIN WALL STRUCTURE)	DWG. NO. SA-221
APPROVED				SHT 4 OF 5

V:\Library & Standards\Standards\Trolley\Details\SA-221.1-5.dwg, SA-221.4, 1/5/2007 12:25:05 PM

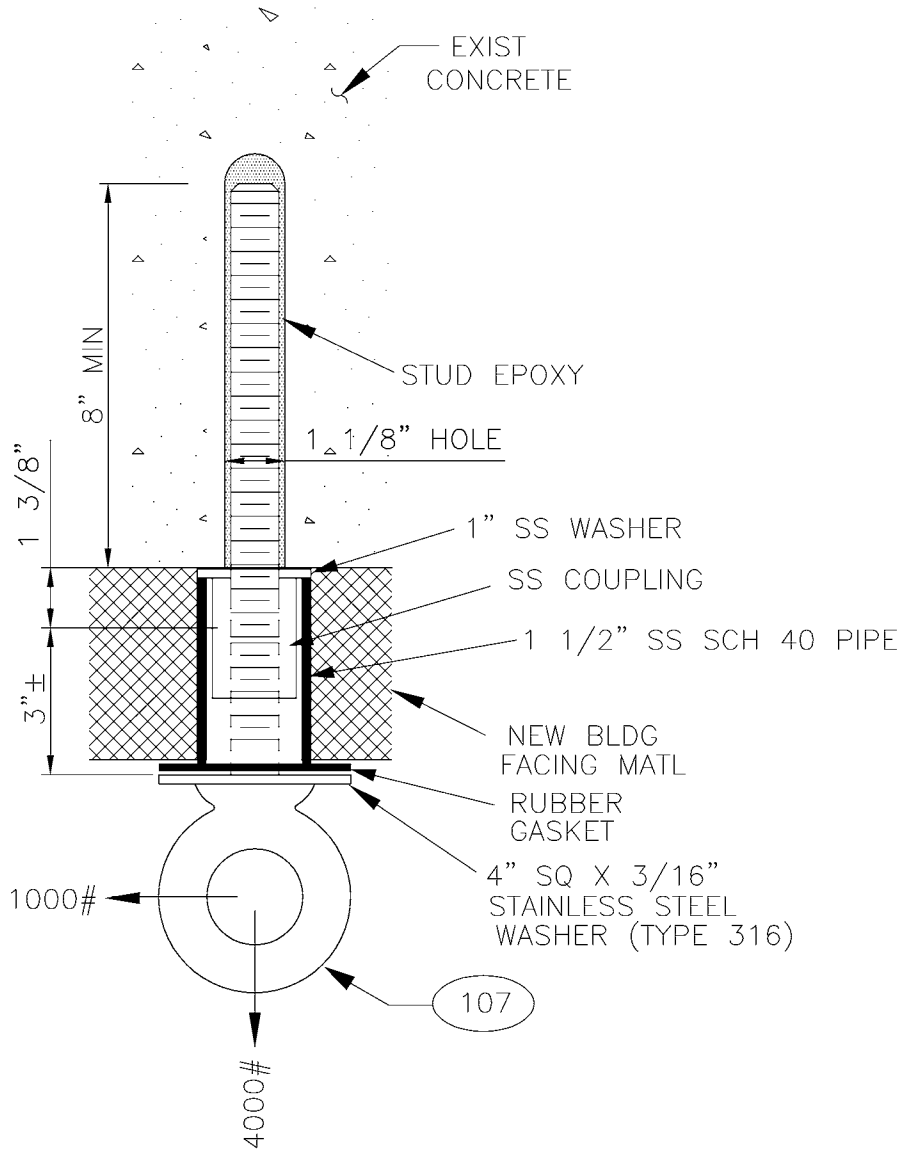

PLAN VIEW W/ FACING MATERIAL

NOTES:

1. INSTALL EYEBOLT EYE IN A HORIZONTAL ORIENTATION.
2. USE ITW RAMSET/REDHEAD EPCON EPOXY ANCHORING SYSTEM TO SET THE STUD. AN EPCON E101 HAND TOOL INJECTOR WITH AN E24 NOZZLE SHALL BE USED TO INJECT CERAMIC 6 EPOXY. INSTALL PER THE MANUFACTURES RECOMMENDATIONS.
3. TO PREVENT SPALLING, DEFLECTION RESULTING FROM SHEAR LOADING SHALL NOT ALLOW THE EYEBOLT TO CONTACT BUILDING FACING MATERIAL.
4. EYEBOLT SHOULDER SHALL BE SEATED.
5. A TWO FOOT MINIMUM SPACING IS REQUIRED BETWEEN ADJACENT EYEBOLTS.

DESIGNED DPG	CHKD: DOW	King County	DEPARTMENT OF TRANSPORTATION TROLLEY STANDARDS	DATE: JAN 98
DR: DOW	SCALE: 3"=1'		BLDG EYEBOLT INSTALLATION (EXISTING CONCRETE STRUCTURE WITH FACING)	FILE
RECOM. DPG	CONTRACT:			DWG. NO. SA-221
APPROVED				SHT 5 OF 5

V:\Library & Standards\Standards\Trolley\Details\SA-221.1-5.dwg, SA-221.5, 1/5/2007 12:25:10 PM

ALLOWABLE LOADS/ ITEM 16						
H \ B	5'	10'	15'	20'	25'	30'
15'	1581	2774	3536	4000	4287	4472
20'	1213	2236	3000	3536	3904	4160
25'	981	1857	2572	3123	3536	3841
30'	822	1581	2236	2774	3201	3536

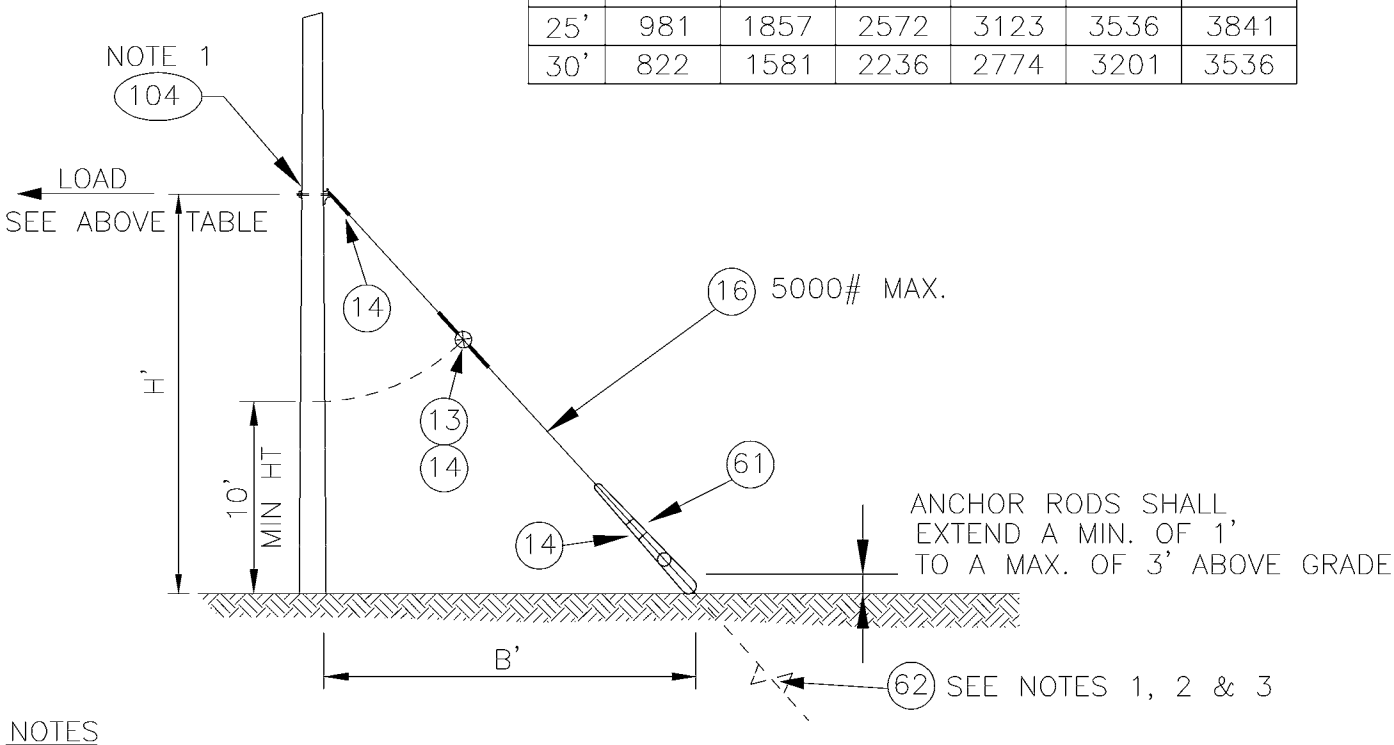

NOTES

1. INSTALLATION HEIGHT AND LOCATION OF ANCHOR IS INDICATED ON THE OVERHEAD DWGS.
2. SCREW ANCHOR SHALL HAVE TWO 8" HELIXES FOR GLACIAL TILL WITH A 1–1 1/2" HUB CAPABLE OF DEVELOPING 7000 FT–LBS MAXIMUM WORKING TORQUE. THE ANCHOR ROD SHALL BE 1" DIA. WITH A TRIPLE EYE.
3. MINIMUM INSTALLATION TORQUE FOR THE SCREW ANCHORS SHALL BE 3500 FOOT–LBS THIS TORQUE VALUE WILL REQUIRE THE USE OF 7 SHEAR PINS FOR USE WITH THE A.B. CHANCE TORQUE INDICATOR, CATALOG # C303–044.

MATERIAL LIST

ITEM #	QTY	DESCRIPTION	MANUFACTURER	CAT. NO.
13	1	GUY STRAIN INSUL	PORCELAIN PRODUCTS CO.	506
14	4	GUY GRIP DEADEND	PREFORMED	CDE–3115
16	VARIES	GUY STRAND	COPPERWELD	16M
61	1	GUY GUARD, 8 FT, FOR USE ON 3/16" TO 1/2" STRAND	PREFORMED	PG 5518
62	1	POWER INSTALLED SCREW ANCHOR	CHANCE	E102–1219
104	VARIES	WOOD POLE DOWNGUY ASSEMBLY	METRO STD	SA–104

DESIGNED DPG	CHKD: DOW	King County	DEPARTMENT OF TRANSPORTATION TROLLEY STANDARDS	DATE: OCT 95
DR: TMB	SCALE: NONE			FILE
RECOM.	CONTRACT:		DOWN GUY	DWG. NO. SA–231
APPROVED				SHT 1 OF 1

V:\Library & Standards\Standards\Trolley\Details\SA-231-232 234.dwg, SA-231, 1/5/2007 12:25:17 PM

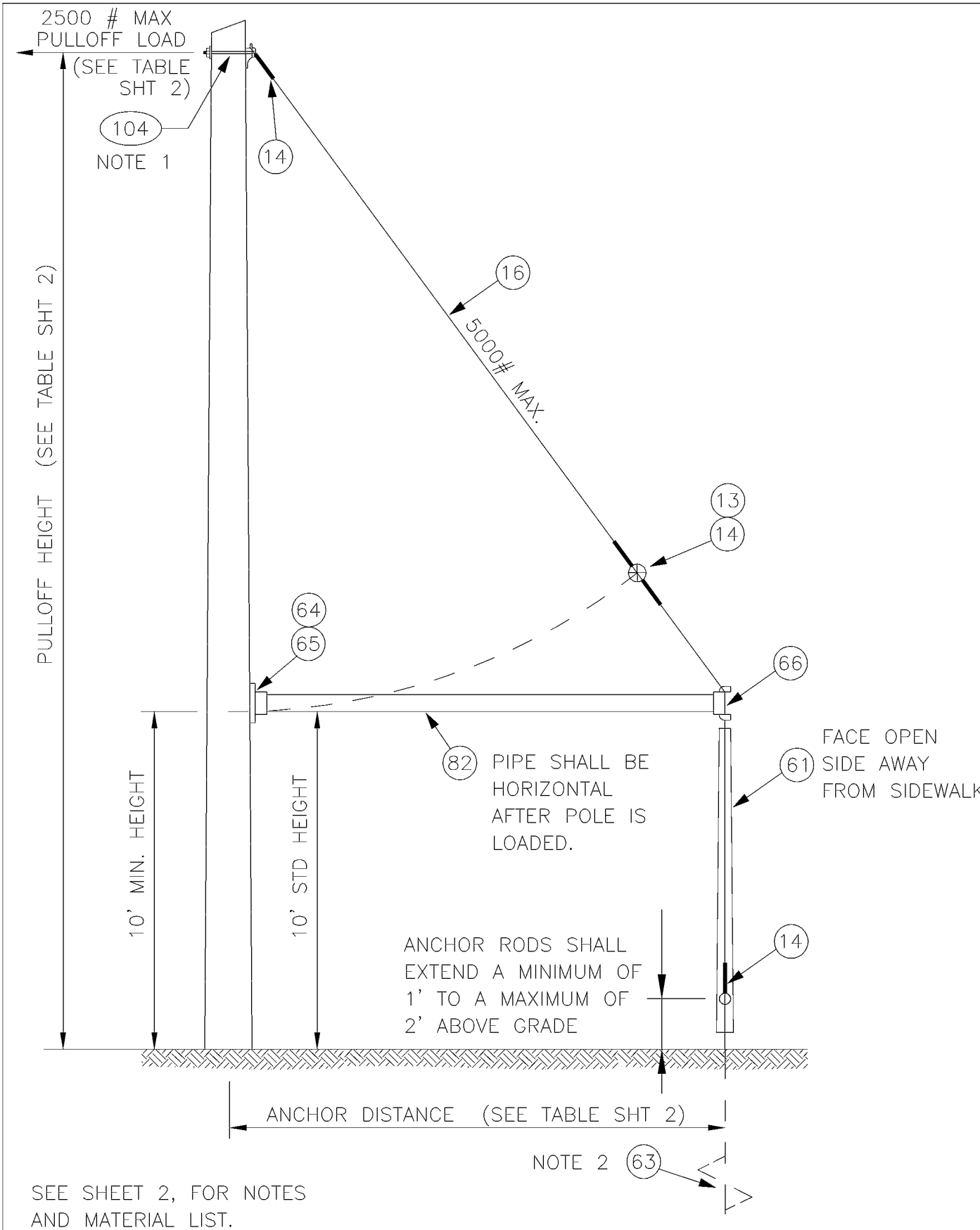

SEE SHEET 2, FOR NOTES
AND MATERIAL LIST.

DESIGNED DPG	CHKD: DOW	King County	DEPARTMENT OF TRANSPORTATION TROLLEY STANDARDS	DATE: OCT 95
DR: TMB	SCALE: NONE			FILE
RECOM.	CONTRACT:		SIDEWALK GUY	DWG. NO. SA-232
APPROVED				SHT 1 OF 2

V:\Library & Standards\Standards\Trolley\Details\SA-231-232 234.dwg, SA-232.1, 1/5/2007 12:25:22 PM

NOTES:

1. INSTALLATION HEIGHT AND LOCATION OF ANCHOR IS INDICATED ON THE OVERHEAD DRAWINGS.

2. SCREW ANCHOR SHALL HAVE TWO 8" HELIXES FOR GLACIAL TILL WITH A 1 1/2" HUB CAPABLE OF DEVELOPING 7000 FT-LBS MAX. WORKING TORQUE. THE ANCHOR ROD SHALL BE 1" DIAMETER WITH A TRIPLE EYE. MINIMUM INSTALLATION TORQUE FOR S

ALLOWABLE PULLOFF LOADING PER GUY

*	*	*	*	*	*	*	*
	*	*	*	*	*	*	*
2236		*	*	*	*	*	*
1923	2236			*	*	*	*
1682	1970	2236	2480	`0	*	*	*
1491	1756	2004	2236	2451	2500	*	*
1338	1581	1812	2030	2236	2428	2500	*
1213	1437	1652	1857	2052	2236	2410	2500

* = MAXIMUM LOAD OF 2500 # APPLIES.

MATERIAL LIST

ITEM #	QTY	DESCRIPTION	MANUFACTURER	CAT. NO.
13	1	GUY STRAIN INSUL	PORCELAIN PRODUCTS CO.	506
14	4	GUY GRIP DEADEND	PREFORMED	CDE-3115
16	VARIES	GUY STRAND	COPPERWELD	16M
61	1	GUY GUARD, 8 FT, FOR USE ON 3/16" TO 1/2" STRAND	PREFORMED	PG 5518
63	1	POWER INSTALLED SCREW ANCHOR	CHANCE	C102-1260
64	1	POLE PLATE, 2 1/2" PIPE	JOSLYN	J0521
65	4	LAG SCREW, FETTER DRIVE, 1/2" x 4"	JOSLYN	J8754
66	1	END FITTING, 2 1/2" PIPE	COOPER POWER SYSTEM	DG5G1
82	VARIES	2 1/2" DIA ASTM A53 GRB STD WT GALV STEEL PIPE		
104	VARIES	WOOD POLE DOWNGUY ASSEMBLY	METRO STD	SA-104

DESIGNED DPG	CHKD: DOW	King County	DEPARTMENT OF TRANSPORTATION TROLLEY STANDARDS	DATE: OCT 96
DR: TMB	SCALE: NONE			FILE
RECOM.	CONTRACT:		SIDEWALK GUY	DWG. NO. SA-232
APPROVED				SHT 2 OF 2

V:\Library & Standards\Standards\Trolley\Details\SA-231-232 234.dwg, SA-232.2, 1/5/2007 12:25:27 PM

MATERIAL LIST

ITEM #	QTY	DESCRIPTION	MANUFACTURER	CAT. NO.
17	4	THIMBLE, 1/2" XHD, OPEN	CROSBY	G414
55	VARIES	PHILLYSTRAN (3/8")	PHILLYSTRAN INC	HPTG 67001
56	4	PHILLYSTRAN BIG GRIP	PHILLYSTRAN INC	PLP 2755
90	1	HEAVY PIPE CLAMP, GALV, 3" IPS	GRINNELL	FIG. 216
102	VARIES	FORGED THREE-PIECE ADJUSTABLE POLE BAND, ANNEALED & GALVANIZED	KORTICK MFG CO	
103	VARIES	WOOD POLE EYEBOLT	METRO STD	SA-103

NOTES

1. A POLE COLLAR OR POLE EYEBOLT IS REQUIRED PER SA-102 OR SA-103. INSTALLATION HEIGHT IS 1 FOOT ABOVE THE BRACKET ARM UNLESS DWGS SPECIFY OTHERWISE.

V:\Library & Standards\Standards\Trolley\Details\SA-231-232 234.dwg, SA-234.2, 1/5/2007 12:25:33 PM

DESIGNED DPG	CHKD: DPG	King County	DEPARTMENT OF TRANSPORTATION TROLLEY STANDARDS	DATE: JAN 97
DR: DOW	SCALE: NONE			FILE
RECOM.	CONTRACT:		BRACKET ARM GUY	DWG. NO. SA-234
APPROVED				SHT 2 OF 2

NOTES

1 A POLE COLLAR OR POLE EYEBOLT IS REQUIRED PER SA-102 OR SA-103 UNLESS A BUILDING EYEBOLT ATTACHMENT IS USED. GUY TENSION IS INDICATED ON THE OVERHEAD DRAWINGS.

2 PROVIDE TENSION ADJUSTMENT POINTS AT LOCATIONS INDICATED BY "⊠". PROVIDE TWO WIRE ROPE CLIPS AT THESE LOCATIONS. SEE SA-166.

3 SEE SA-167 FOR INSULATED GUY CRITERIA.

MATERIAL LIST

ITEM #	QTY	DESCRIPTION	MANUFACTURER	CAT. NO.
SA-233L-----GUY TENSIONS 0-2500 LBS				
03	2	GUY STRAIN INSUL	WABCO	31504-3060
04	5	GUY GRIP DEADEND	PREFORMED	CDE-3106
05	2	WIRE ROPE CLIP, 5/16"	CROSBY	G450
06	AS REQD	FRICTION TAPE, 3/4" 6 WRAPS		
07	2	THIMBLE, 3/8" XHD, OPEN	CROSBY	G414
08	VARIES	GUY STRAND	COPPERWELD	8M-NOTE 3
SA-233H-----GUY TENSIONS 2500-5000 LBS				
06	AS REQD	FRICTION TAPE, 3/4" 6 WRAPS		
13	2	GUY STRAIN INSUL.	WABCO	31506-3060
14	5	GUY GRIP DEADEND	PREFORMED	CDE-3115
15	4	WIRE ROPE CLIP, 5/16"	CROSBY	G450
16	VARIES	GUY STRAND	COPPERWELD	16M-NOTE 3
17	2	THIMBLE, 1/2" XHD, OPEN	CROSBY	G414
ALSO SA-233L & SA-233H				
102	VARIES	STEEL POLE COLLAR	METRO	SA-102
103	VARIES	WOOD POLE EYEBOLT	METRO	SA-103

DESIGNED DG	CHKD: DW	King County	METRO TRANSIT DIVISION TROLLEY OVERHEAD SYSTEM STANDARDS STANDARD HEAD GUY	DATE: JUN 93
DR: TMB	SCALE: NONE			FILE
RECOM.	IBIS NO:			DWG. NO. SA-233
APPROVED	CONTRACT NO:			SHT 1 OF

V:\Library & Standards\Standards\Trolley\Details\SA-233.dwg | Layout: Layout1 | XREFS: | IMAGES:
DATE: Jan 05, 2007-12:25:45pm USER: sutarj
V:\Library & Standards\Standards\Trolley\Details\SA-233.dwg, Layout1, 1/5/2007 12:25:41 PM

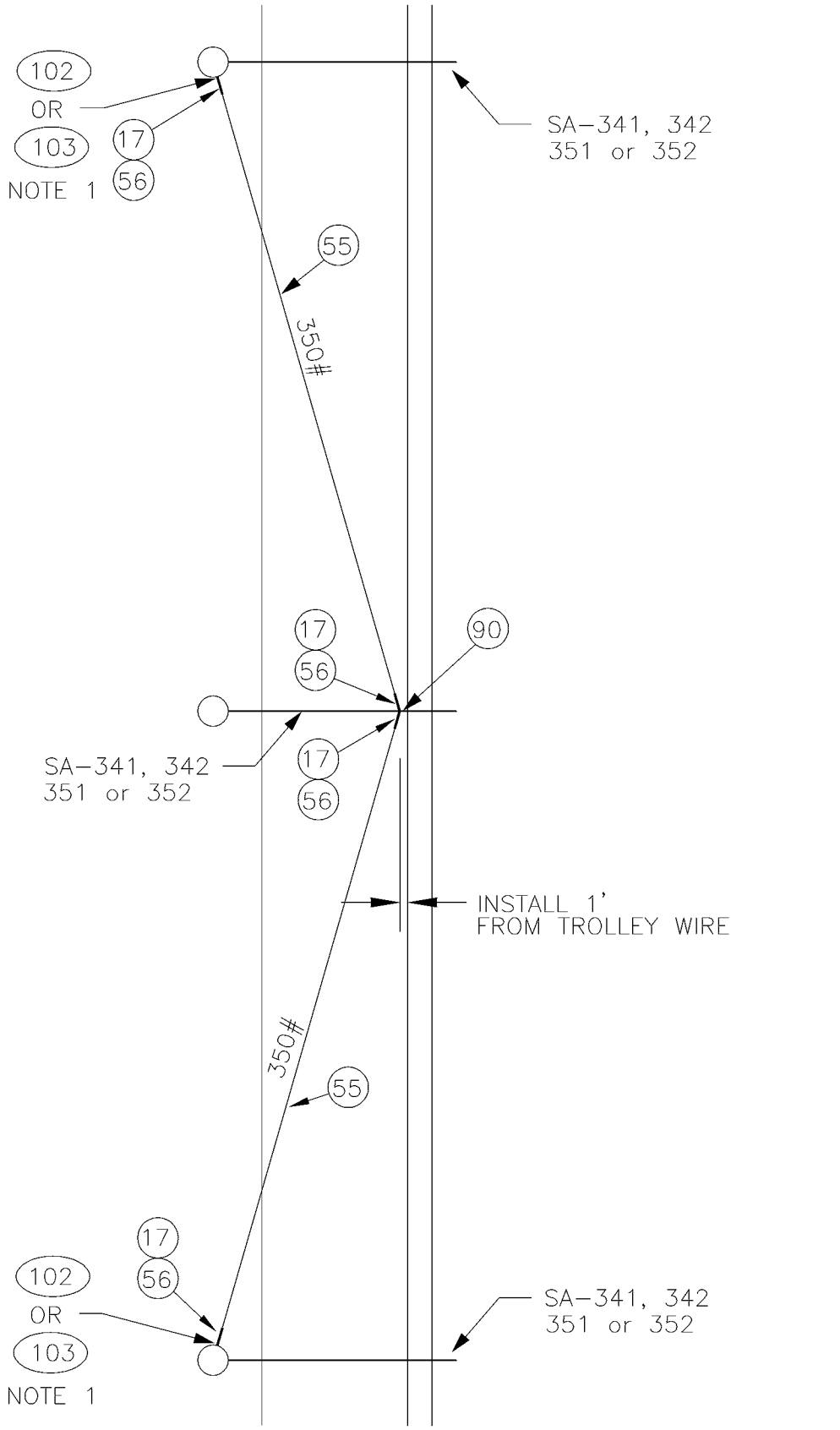

DESIGNED DPG	METRO	Municipality of Metropolitan Seattle		DATE: JUN 95
DRA: DOW / CHKD: .	SCALE: NONE			FILE .
RECOM.				DWG. NO. SA-234
APPROVED	TROLLEY STANDARDS	BRACKET ARM GUY		SHT 1 OF 2

V:\Library & Standards\Standards\Trolley\Details\SA-234-1.dwg, SA-234.1, 1/5/2007 12:25:52 PM

MATERIAL LIST

ITEM #	QTY	DESCRIPTION	MANUFACTURER	CAT. NO.
17	4	THIMBLE, ½" XHD, OPEN	CROSBY	G414
55	VARIES	PHILLYSTRAN (⅜")	PHILLYSTRAN INC	HPTG 67001
56	4	PHILLYSTRAN BIG GRIP	PHILLYSTRAN INC	PLP2755
90	1	HEAVY PIPE CLAMP, GALV 3" IPS	GRINNELL	FIG. 216
102	VARIES	FORGED 3-PIECE ADJUSTABLE POLE BAND, ANNEALED & GALVANIZED	KORTICK MFG CO	
103	VARIES	WOOD EYEBOLT	METRO STD	SA-103

NOTE

1. A POLE COLLAR OR POLE EYEBOLT IS REQUIRED PER SA-102 OR SA-103. INSTALLATION HEIGHT IS 1 FOOT ABOVE THE BRACKET ARM UNLESS SRAWINGS SPECIFY OTHERWISE.

DESIGNED: DPG	METRO Municipality of Metropolitan Seattle		DATE: JUN 95
DRA: DOW / CHKD: .	SCALE: NONE	BRACKET ARM GUY	FILE: .
RECOM.	TROLLEY STANDARDS		DWG. NO. SA-234
APPROVED			SHT 2 OF 2

V:\Library & Standards\Working Documents\Trolley\Details\Completed Detail Drawing Files\SA-234.1-2.dwg, SA-234.2, 1/10/2007 2:03:53 PM

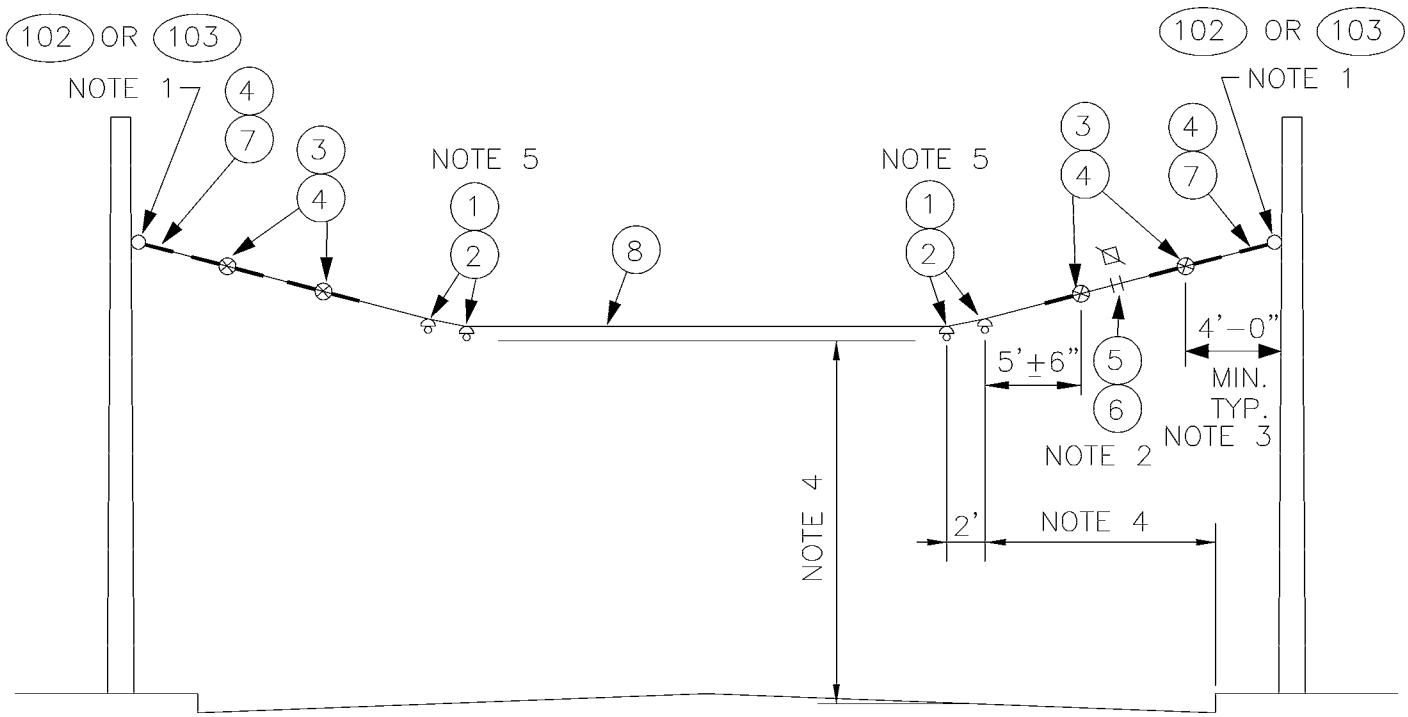

NOTES

1. A POLE COLLAR OR POLE EYEBOLT IS REQUIRED PER SA–102 OR SA–103 UNLESS A BUILDING EYEBOLT ATTACHMENT IS USED. INSTALLATION HEIGHT IS INDICATED ON THE OVERHEAD DRAWINGS.
2. PROVIDE TENSION ADJUSTMENT POINTS AT LOCATIONS INDICATED BY "⊠". PROVIDE WIRE ROPE CLIPS AT THESE LOCATIONS. SEE SA–166.
3. SEE SA–370 FOR LIMITED SPACE VARIANCES.
4. SEE SA–164 FOR VERTICAL & HORIZONTAL DIMENSIONS TO TROLLEY WIRE.
5. MAXIMUM ANGLE IS 0.5°. SEE SA–307, PLAN VIEW.

MATERIAL LIST

ITEM #	QTY	DESCRIPTION	MANUFACTURER	CAT. NO.
01	4	DETROIT CLAMP ASSY	WABCO	19293–3007
02	4	AGC TANGENT SPAN HANGER	WABCO	19360–2000
03	4	GUY STRAIN INSUL	PORCELAIN PRODUCTS CO.	504
04	9	GUY GRIP DEADEND	PREFORMED	CDE–3106
05	2	WIRE ROPE CLIP, 5/16"	CROSBY	G450
06	AS REQD	FRICTION TAPE, 3/4" (6 WRAPS)		
07	2	THIMBLE, 3/8" XHD, OPEN	CROSBY	G414
08	VARIES	GUY STRAND	COPPERWELD	8M
102	VARIES	FORGED THREE–PIECE ADJUSTABLE POLE BAND, ANNEALED & GALVANIZED	KORTICK MFG CO	
103	VARIES	WOOD POLE EYEBOLT	METRO STD	SA–103

DESIGNED DPG	CHKD: DOW	King County	DEPARTMENT OF TRANSPORTATION TROLLEY STANDARDS	DATE: OCT 95
DR: TMB	SCALE: NONE			FILE
RECOM.	CONTRACT:		TANGENT SPAN TWO–WAY TRAFFIC	DWG. NO. SA–301
APPROVED				SHT 1 OF 1

V:\Library & Standards\Standards\Trolley\Details\SA-301-309.dwg, SA-301, 1/5/2007 12:26:02 PM

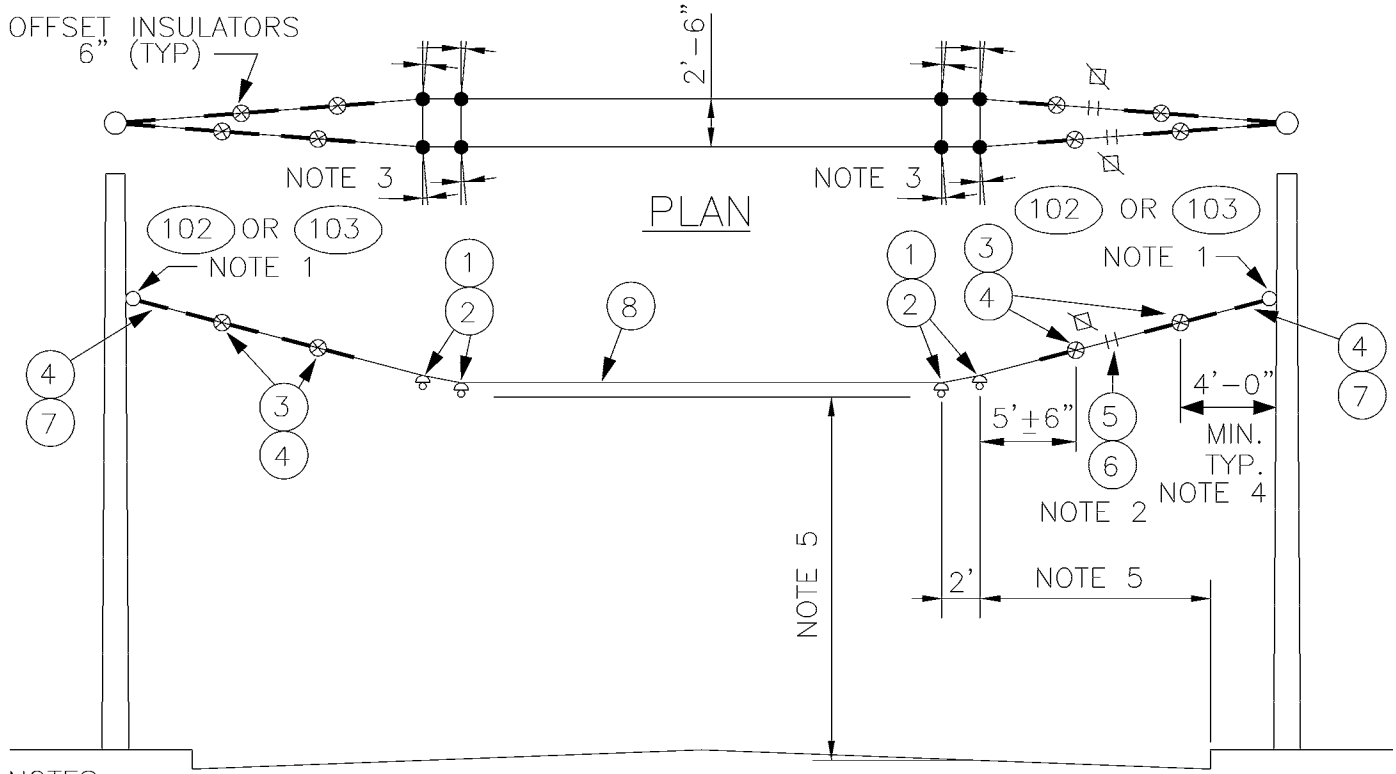

ELEVATION

NOTES

1. A POLE COLLAR OR POLE EYEBOLT IS REQUIRED PER SA-102 OR SA-103 UNLESS A BUILDING EYEBOLT ATTACHMENT IS USED. INSTALLATION HEIGHT IS INDICATED ON THE OVERHEAD DRAWINGS.
2. PROVIDE TENSION ADJUSTMENT POINTS AT LOCATIONS INDICATED BY "⊠". PROVIDE WIRE ROPE CLIPS AT THESE LOCATIONS. SEE SA-166.
3. MAXIMUM ANGLE 1°, 0.5° PER SPAN HANGER.
4. SEE SA-370 FOR LIMITED SPACE VARIANCES.
5. SEE SA-164 FOR VERTICAL & HORIZONTAL DIMENSIONS TO TROLLEY WIRE.

MATERIAL LIST

ITEM #	QTY	DESCRIPTION	MANUFACTURER	CAT. NO.
01	8	DETROIT CLAMP ASSY	WABCO	19293-3007
02	8	AGC TANGENT SPAN HANGER	WABCO	19360-2000
03	8	GUY STRAIN INSUL	PORCELAIN PRODUCTS CO.	504
04	18	GUY GRIP DEADEND	PREFORMED	CDE-3106
05	4	WIRE ROPE CLIP, 5/16"	CROSBY	G450
06	AS REQD	FRICTION TAPE, 3/4" (6 WRAPS)		
07	4	THIMBLE, 3/8" XHD, OPEN	CROSBY	G414
08	VARIES	GUY STRAND	COPPERWELD	8M
102	VARIES	FORGED THREE-PIECE ADJUSTABLE POLE BAND, ANNEALED & GALVANIZED	KORTICK MFG CO	
103	VARIES	WOOD POLE EYEBOLT	METRO STD	SA-103

DESIGNED DPG	CHKD: DOW	King County	DEPARTMENT OF TRANSPORTATION TROLLEY STANDARDS	DATE: OCT 95
DR: TMB	SCALE: NONE			FILE
RECOM.	CONTRACT:		HOLDUP TANGENT SPAN TWO-WAY TRAFFIC	DWG. NO. SA-302
APPROVED				SHT 1 OF 1

V:\Library & Standards\Standards\Trolley\Details\SA-301-309.dwg, SA-302, 1/5/2007 12:26:14 PM

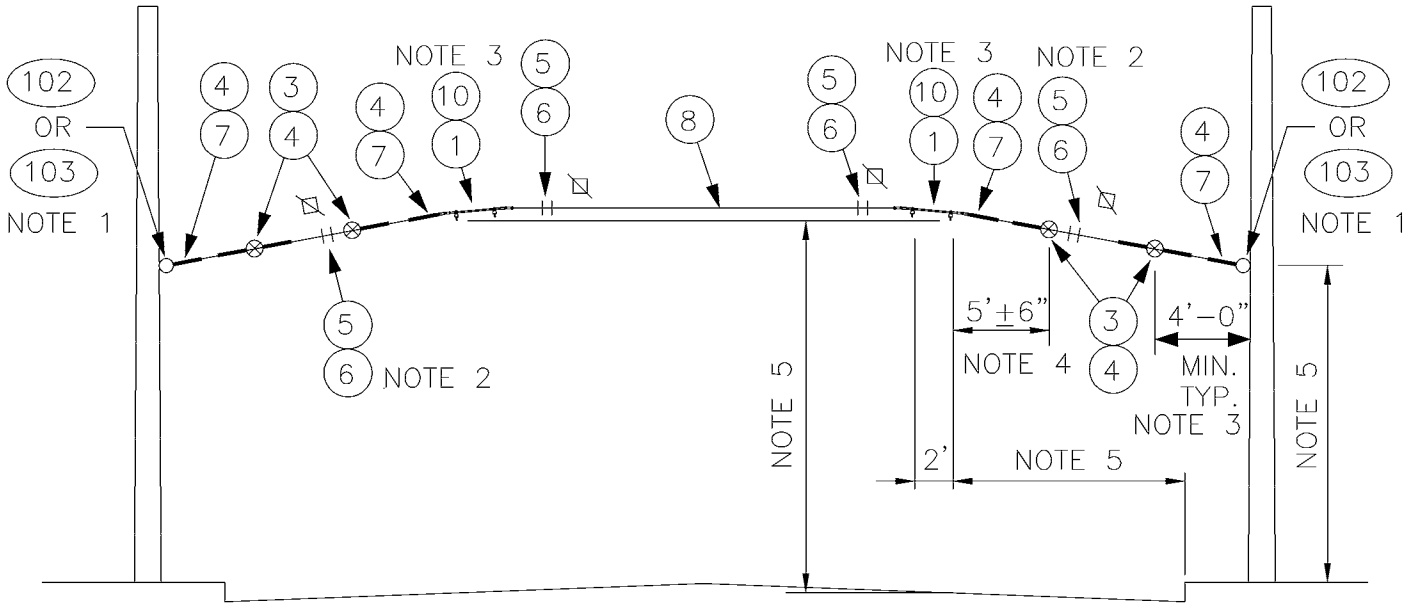

NOTES

1. A POLE COLLAR OR POLE EYEBOLT IS REQUIRED PER SA-102 OR SA-103 UNLESS A BUILDING EYEBOLT ATTACHMENT IS USED. INSTALLATION HEIGHT IS INDICATED ON THE OVERHEAD DRAWINGS.
2. PROVIDE TENSION ADJUSTMENT POINTS AT LOCATIONS INDICATED BY "⧄". PROVIDE WIRE ROPE CLIPS AT THESE LOCATIONS. SEE SA-166.
3. MAXIMUM ANGLE 0.5 DEGREE. SEE SA-307, PLAN VIEW.
4. SEE SA-370 FOR LIMITED SPACE VARIANCES.
5. SEE SA-164 FOR VERTICAL & HORIZONTAL DIMENSIONS TO TROLLEY WIRE.

MATERIAL LIST

ITEM #	QTY	DESCRIPTION	MANUFACTURER	CAT. NO.
01	4	DETROIT CLAMP ASSY	WABCO	19293-3007
03	4	GUY STRAIN INSUL	PORCELAIN PRODUCTS CO.	504
04	10	GUY GRIP DEADEND	PREFORMED	CDE-3106
05	8	WIRE ROPE CLIP, 5/16"	CROSBY	G450
06	AS REQD	FRICTION TAPE, 3/4" (6 WRAPS)		
07	4	THIMBLE, 3/8" XHD, OPEN	CROSBY	G414
08	VARIES	GUY STRAND	COPPERWELD	8M
10	2	HI-LITE DOUBLE CURVE HANGER	WABCO	54962-3001
102	VARIES	FORGED THREE-PIECE ADJUSTABLE POLE BAND, ANNEALED & GALVANIZED	KORTICK MFG CO	
103	VARIES	WOOD POLE EYEBOLT	METRO STD	SA-103

DESIGNED DPG	CHKD: DOW	King County	DEPARTMENT OF TRANSPORTATION TROLLEY STANDARDS	DATE: OCT 95
DR: TMB	SCALE: NONE			FILE
RECOM.	CONTRACT:		INVERTED TANGENT SPAN TWO-WAY TRAFFIC	DWG. NO. SA-303
APPROVED				SHT 1 OF 1

V:\Library & Standards\Standards\Trolley\Details\SA-301-309.dwg, SA-303, 1/5/2007 12:26:19 PM

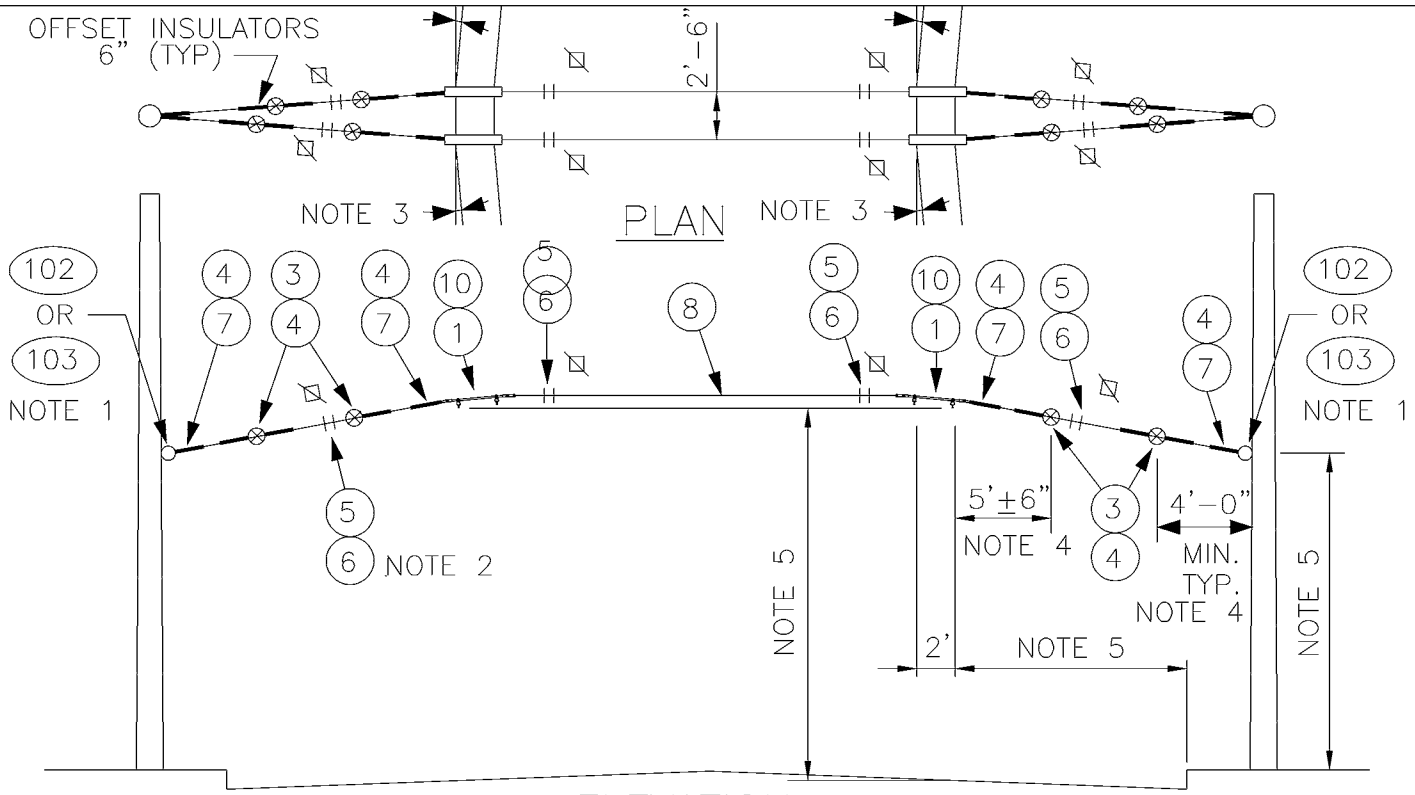

NOTES

1. A POLE COLLAR OR POLE EYEBOLT IS REQUIRED PER SA-102 OR SA-103 UNLESS A BUILDING EYEBOLT ATTACHMENT IS USED. INSTALLATION HEIGHT IS INDICATED ON THE OVERHEAD DRAWINGS.
2. PROVIDE TENSION ADJUSTMENT POINTS AT LOCATIONS INDICATED BY "⊠". PROVIDE WIRE ROPE CLIPS AT THESE LOCATIONS. SEE SA-166.
3. MAXIMUM ANGLE 1°, 0.5° PER DOUBLE CURVE HANGER.
4. SEE SA-370 FOR LIMITED SPACE VARIANCES.
5. SEE SA-164 FOR VERTICAL & HORIZONTAL DIMENSIONS TO TROLLEY WIRE.

MATERIAL LIST

ITEM #	QTY	DESCRIPTION	MANUFACTURER	CAT. NO.
01	8	DETROIT CLAMP ASSY	WABCO	19293-3007
03	8	GUY STRAIN INSUL	PORCELAIN PRODUCTS CO.	504
04	20	GUY GRIP DEADEND	PREFORMED	CDE-3106
05	16	WIRE ROPE CLIP, 5/16"	CROSBY	G450
06	AS REQD	FRICTION TAPE, 3/4" (6 WRAPS)		
07	8	THIMBLE, 3/8" XHD, OPEN	CROSBY	G414
08	VARIES	GUY STRAND	COPPERWELD	8M
10	4	HI-LITE DOUBLE CURVE HANGER	WABCO	54962-3001
102	VARIES	FORGED THREE-PIECE ADJUSTABLE POLE BAND, ANNEALED & GALVANIZED	KORTICK MFG CO	
103	VARIES	WOOD POLE EYEBOLT	METRO STD	SA-103

DESIGNED DPG	CHKD: DOW	King County	DEPARTMENT OF TRANSPORTATION TROLLEY STANDARDS	DATE: OCT 95
DR: TMB	SCALE: NONE		HOLDDOWN TANGENT SPAN TWO-WAY TRAFFIC	FILE
RECOM.	CONTRACT:			DWG. NO. SA-304
APPROVED				SHT 1 OF 1

V:\Library & Standards\Standards\Trolley\Details\SA-301-309.dwg, SA-304, 1/5/2007 12:26:24 PM

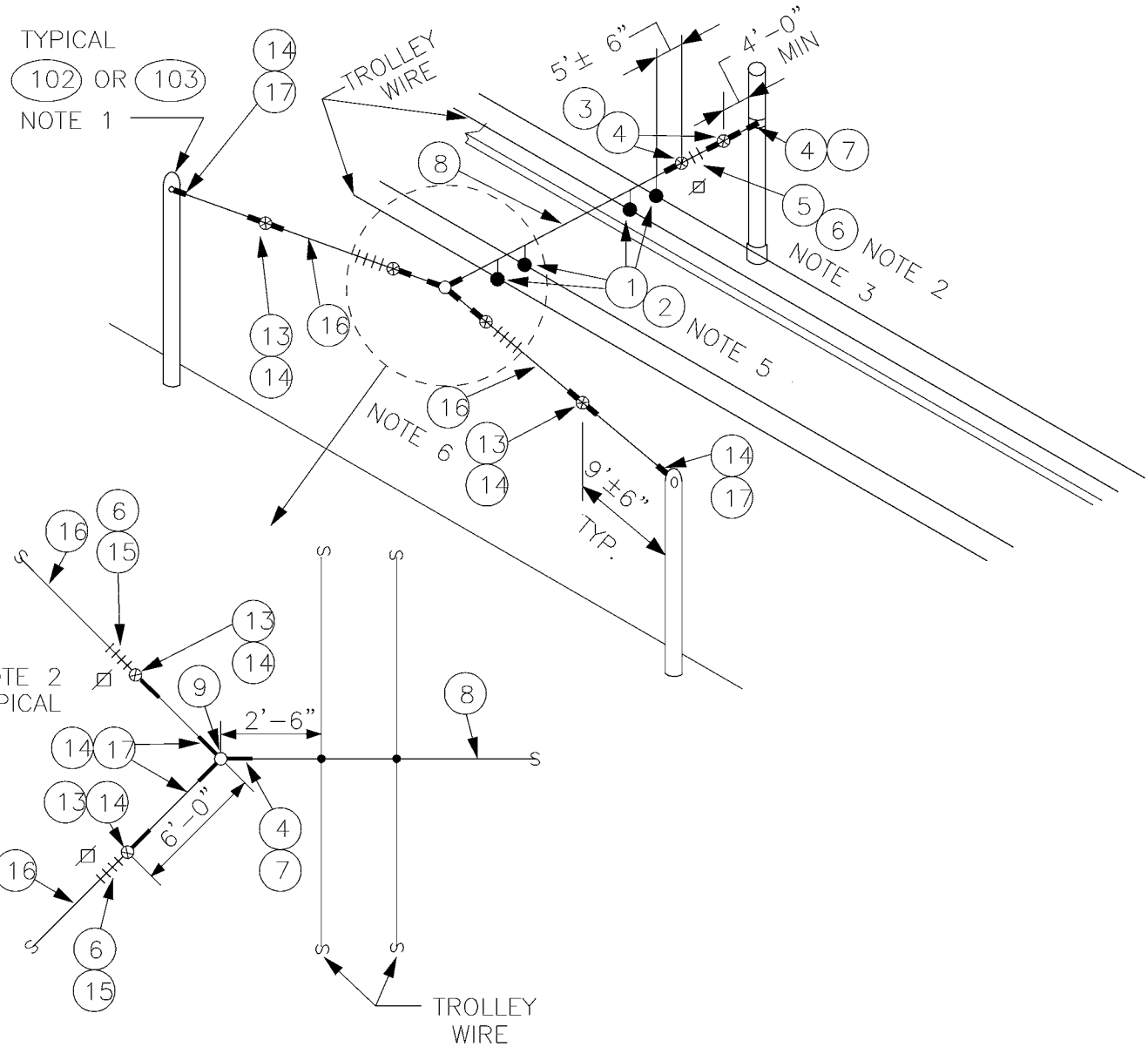

DESIGNED DPG	CHKD: DOW	King County	DEPARTMENT OF TRANSPORTATION TROLLEY STANDARDS	DATE: JUN 95
DR: TMB	SCALE: NONE			FILE
RECOM.	CONTRACT:		BRIDLE TANGENT SPAN TWO-WAY TRAFFIC	DWG. NO. SA-305
APPROVED				SHT 1 OF 2

V:\Library & Standards\Standards\Trolley\Details\SA-301-309.dwg, SA-305.1, 1/5/2007 12:26:29 PM

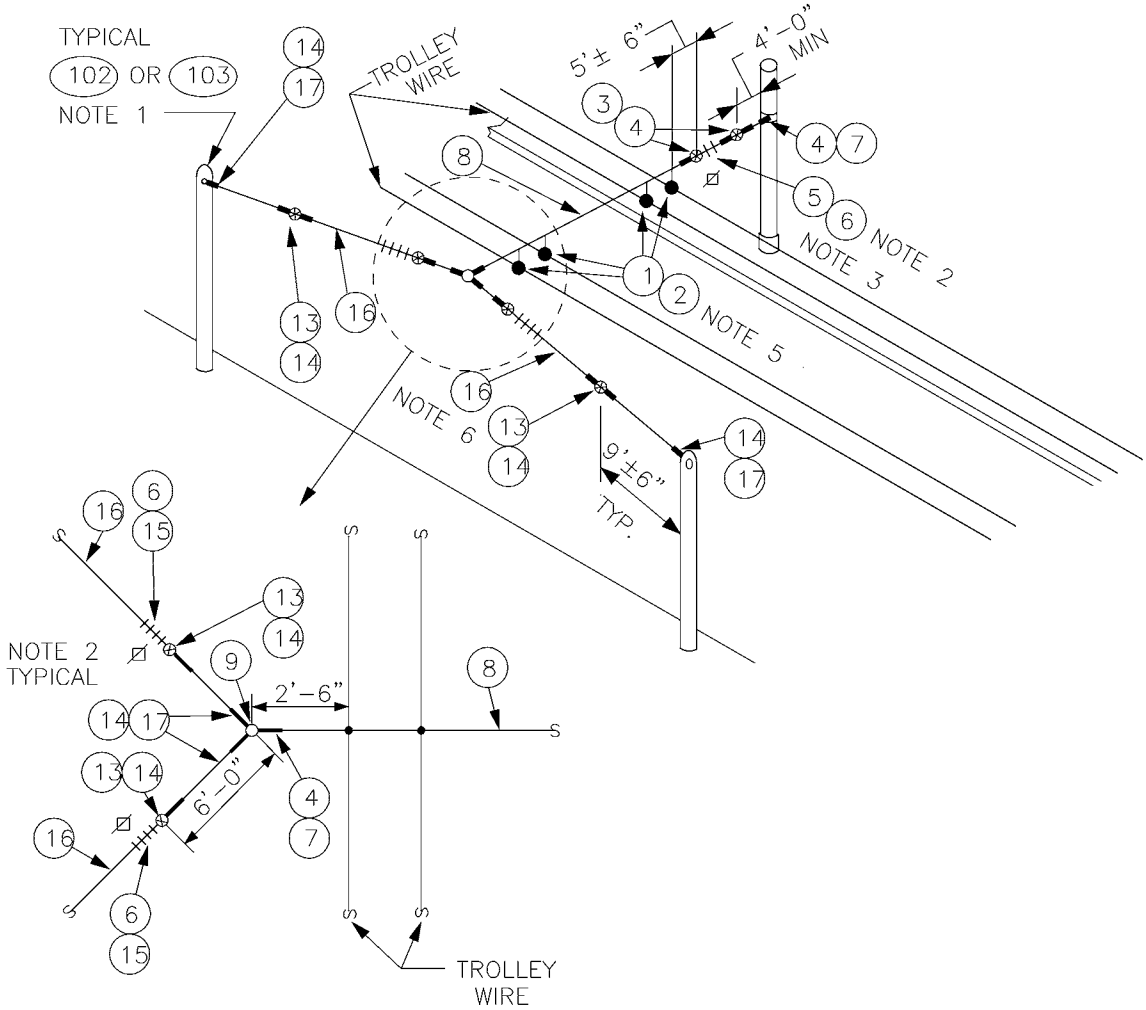

DESIGNED DPG	CHKD: DOW	King County	DEPARTMENT OF TRANSPORTATION TROLLEY STANDARDS	DATE: OCT 95
DR: TMB	SCALE: NONE			FILE
RECOM.	CONTRACT:		BRIDLE TANGENT SPAN TWO-WAY TRAFFIC	DWG. NO. SA-305
APPROVED				SHT 2 OF 2

V:\Library & Standards\Standards\Trolley\Details\SA-301-309.dwg, SA-305.2, 1/5/2007 12:26:34 PM

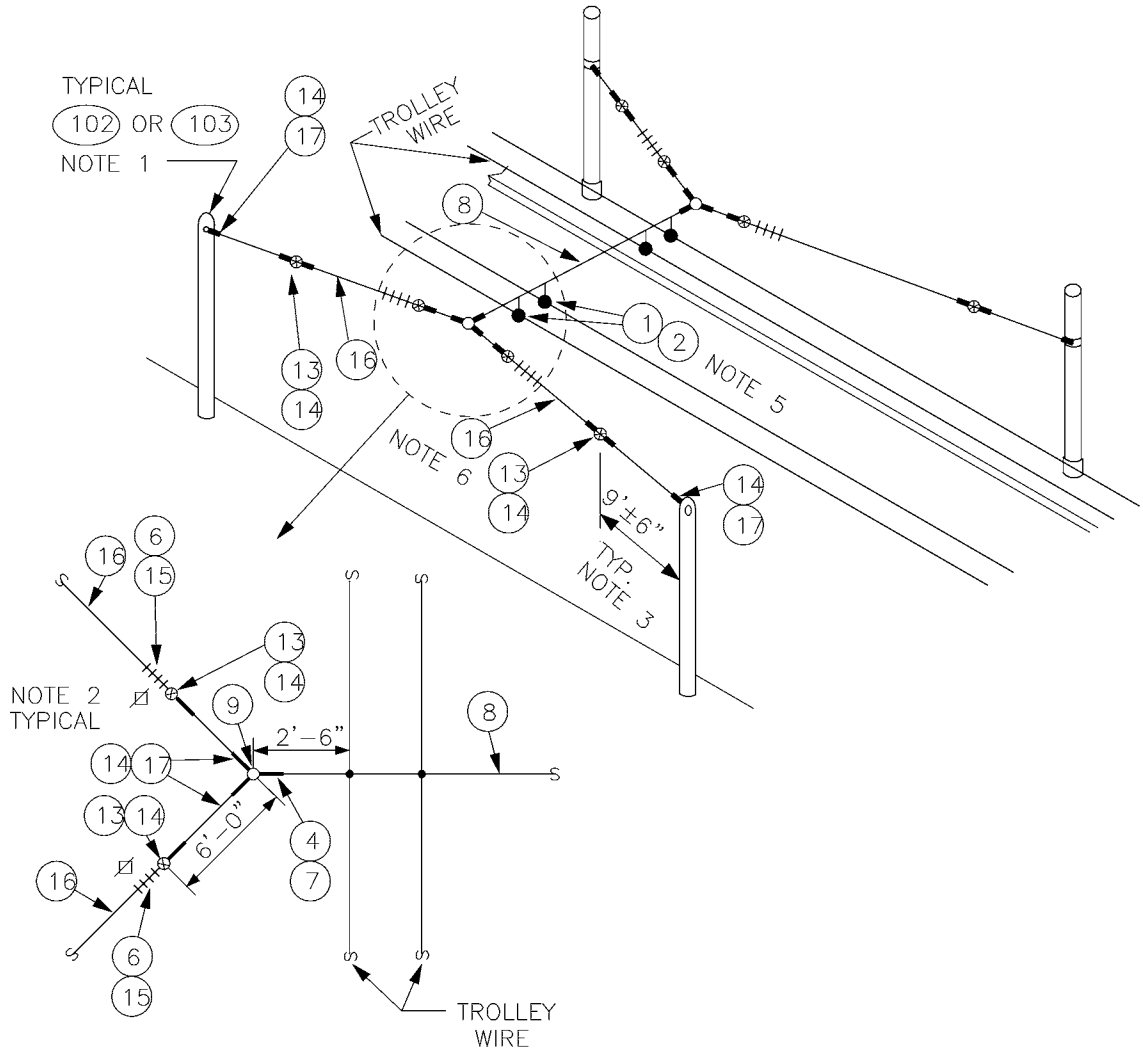

DESIGNED DPG	CHKD: DOW	King County	DEPARTMENT OF TRANSPORTATION TROLLEY STANDARDS	DATE: JUN 95
DR: TMB	SCALE: NONE			FILE
RECOM.	CONTRACT:		DOUBLE BRIDLE TANGENT SPAN TWO-WAY TRAFFIC	DWG. NO. SA-306
APPROVED				SHT 1 OF 2

V:\Library & Standards\Standards\Trolley\Details\SA-301-309.dwg, SA-306.1, 1/5/2007 12:26:39 PM

MATERIAL LIST

ITEM #	QTY	DESCRIPTION	MANUFACTURER	CAT. NO.
01	4	DETROIT CLAMP ASSY	WABCO	19293-3007
02	4	AGC TANGENT SPAN HANGER	WABCO	19360-2000
03	VARIES	GUY STRAIN INSUL	PORCELAIN PRODUCTS CO.	504
04	VARIES	GUY GRIP DEADEND	PREFORMED	CDE-3106
05	VARIES	WIRE ROPE CLIP, 5/16"	CROSBY	G450
06	AS REQD	FRICTION TAPE, 3/4" (6 WRAPS)		
07	VARIES	THIMBLE, 3/8" XHD, OPEN	CROSBY	G414
08	VARIES	GUY STRAND	COPPERWELD	8M
09	2	BULL RING	WABCO	18567-2000
13	VARIES	GUY STRAIN INSUL	PORCELAIN PRODUCTS CO.	506
14	VARIES	GUY GRIP DEADEND	PREFORMED	CDE-3115
15	VARIES	WIRE ROPE CLIP, 3/8"	CROSBY	G450
16	VARIES	GUY STRAND	COPPERWELD	16M
17	VARIES	THIMBLE, 1/2" XHD, OPEN	CROSBY	G414
102	VARIES	FORGED THREE-PIECE ADJUSTABLE POLE BAND, ANNEALED & GALVANIZED	KORTICK MFG CO	
103	VARIES	WOOD POLE EYEBOLT	METRO STD	SA-103

NOTES

1. A POLE COLLAR OR POLE EYEBOLT IS REQUIRED PER SA-102 OR SA-103 UNLESS A BUILDING EYEBOLT ATTACHMENT IS USED. INSTALLATION HEIGHT IS INDICATED ON THE OVERHEAD DRAWINGS.

2. PROVIDE TENSION ADJUSTMENT POINTS AT LOCATIONS INDICATED BY "⊠". PROVIDE WIRE ROPE CLIPS AT THESE LOCATIONS. SEE SA-166.

3. SEE SA-370 FOR LIMITED SPACE VARIANCES.

4. SEE SA-164 FOR VERTICAL & HORIZONTAL DIMENSIONS TO TROLLEY WIRE.

5. MAXIMUM ANGLE IS 0.5°. SEE SA-307, PLAN VIEW.

6. IF LOAD SHOWN ON OVERHEAD DRAWINGS IS LESS THAN 2500 LBS, THEN ITEM 8 MAY BE USED INSTEAD OF ITEM 16. THE ASSOCIATED ITEMS SHALL ALSO BE CHANGED I.E. 3 FOR 13, 4 FOR 14, 5 FOR 15 AND 7 FOR 17.

V:\Library & Standards\Standards\Trolley\Details\SA-301-309.dwg, SA-306.2, 1/5/2007 12:26:43 PM

DESIGNED DPG	CHKD: DOW	King County	DEPARTMENT OF TRANSPORTATION TROLLEY STANDARDS	DATE: OCT 95
DR: TMB	SCALE: NONE			FILE
RECOM.	CONTRACT:		DOUBLE BRIDLE TANGENT SPAN TWO-WAY TRAFFIC	DWG. NO. SA-306
APPROVED				SHT 2 OF 2

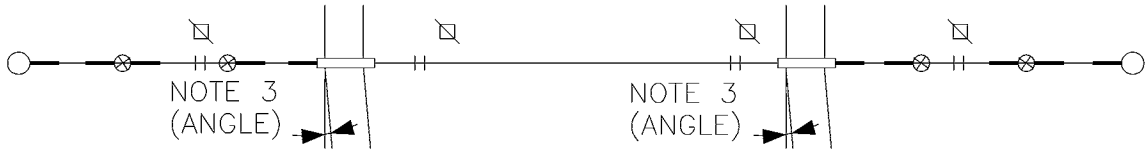

PLAN

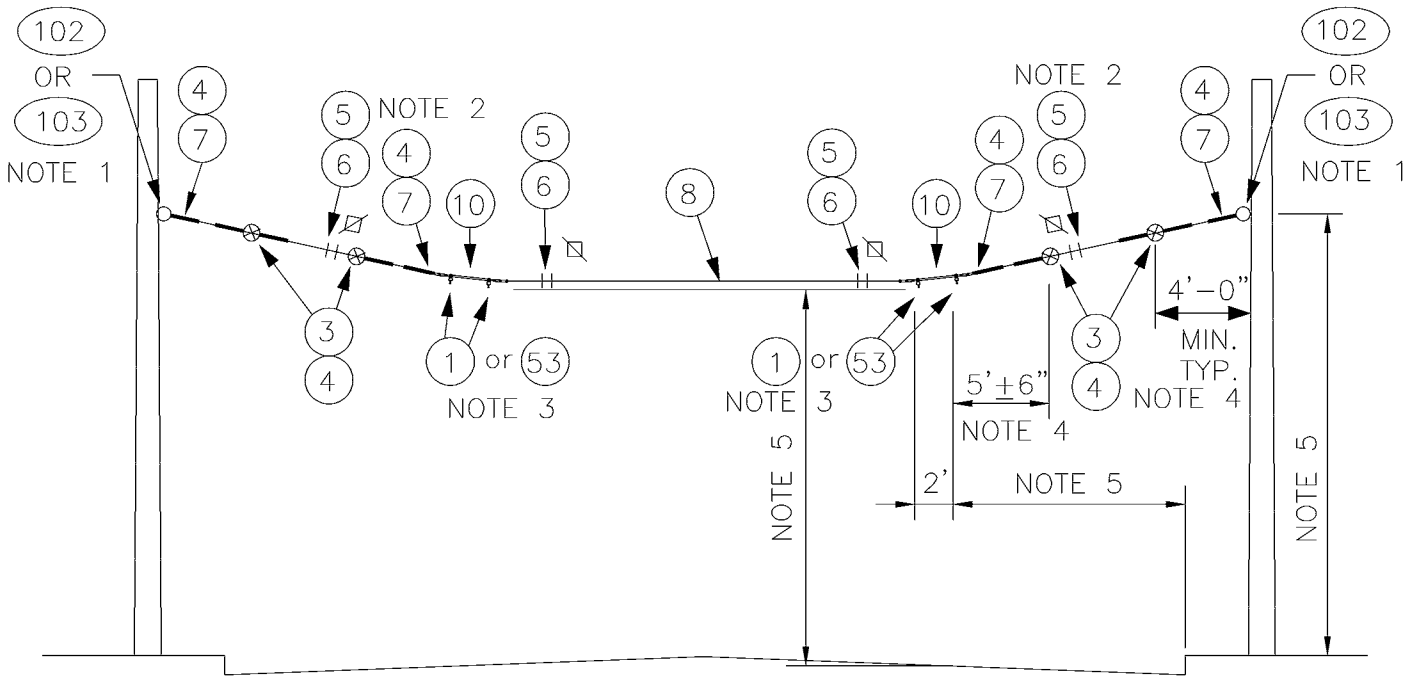

ELEVATION

NOTES

1. A POLE COLLAR OR POLE EYEBOLT IS REQUIRED PER SA-102 OR SA-103 UNLESS A BUILDING EYEBOLT ATTACHMENT IS USED. INSTALLATION HEIGHT IS INDICATED ON THE OVERHEAD DRAWINGS.

2. PROVIDE TENSION ADJUSTMENT POINTS AT LOCATIONS INDICATED BY "⊠". PROVIDE WIRE ROPE CLIPS AT THESE LOCATIONS. SEE SA-166.

3. ANGLE VARIES FROM 1° TO 5°. USE ITEM 1 FOR 1° TO 2.5° ANGLE. USE ITEM 53 FOR 3° TO 5° ANGLE.

4. SEE SA-370 FOR LIMITED SPACE VARIANCES.

5. SEE SA-164 FOR VERTICAL & HORIZONTAL DIMENSIONS TO TROLLEY WIRE.

DESIGNED DPG	CHKD: DOW	King County	DEPARTMENT OF TRANSPORTATION TROLLEY STANDARDS	DATE: JUN 95
DR: TMB	SCALE: NONE			FILE
RECOM.	CONTRACT:		1° TO 5° CURVE SPAN WITH TWO FOOT CURVE RAILS TWO-WAY TRAFFIC	DWG. NO. SA-307
APPROVED				SHT 1 OF 2

V:\Library & Standards\Standards\Trolley\Details\SA-301-309.dwg, SA-307.1, 1/5/2007 12:26:48 PM

MATERIAL LIST

ITEM #	QTY	DESCRIPTION	MANUFACTURER	CAT. NO.
01	VARIES	DETROIT CLAMP ASSY	WABCO	19293-3007
03	4	GUY STRAIN INSUL	PORCELAIN PRODUCTS CO.	504
04	10	GUY GRIP DEADEND	PREFORMED	CDE-3106
05	8	WIRE ROPE CLIP, 5/16"	CROSBY	G450
06	AS REQD	FRICTION TAPE, 3/4" (6 WRAPS)		
07	4	THIMBLE, 3/8" XHD, OPEN	CROSBY	G414
08	VARIES	GUY STRAND	COPPERWELD	8M
10	2	HI-LITE DOUBLE CURVE HANGER	WABCO	54962-3001
53	VARIES	CURVE RAIL (3° TO 5° 2 FT LG)	K & M	851 B412/0
102	VARIES	FORGED THREE-PIECE ADJUSTABLE POLE BAND, ANNEALED & GALVANIZED	KORTICK MFG CO	
103	VARIES	WOOD POLE EYEBOLT	METRO STD	SA-103

DESIGNED DPG	CHKD: DOW	King County	DEPARTMENT OF TRANSPORTATION TROLLEY STANDARDS	DATE: APR 96
DR: TMB	SCALE: NONE			FILE
RECOM.	CONTRACT:		1° TO 5° CURVE SPAN WITH TWO FOOT CURVE RAILS TWO-WAY TRAFFIC	DWG. NO. SA-307
APPROVED				SHT 2 OF 2

V:\Library & Standards\Standards\Trolley\Details\SA-301-309.dwg, SA-307.2, 1/5/2007 12:26:54 PM

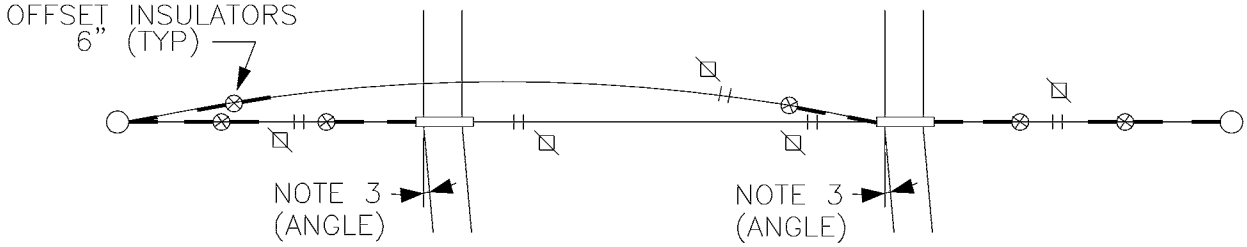

PLAN

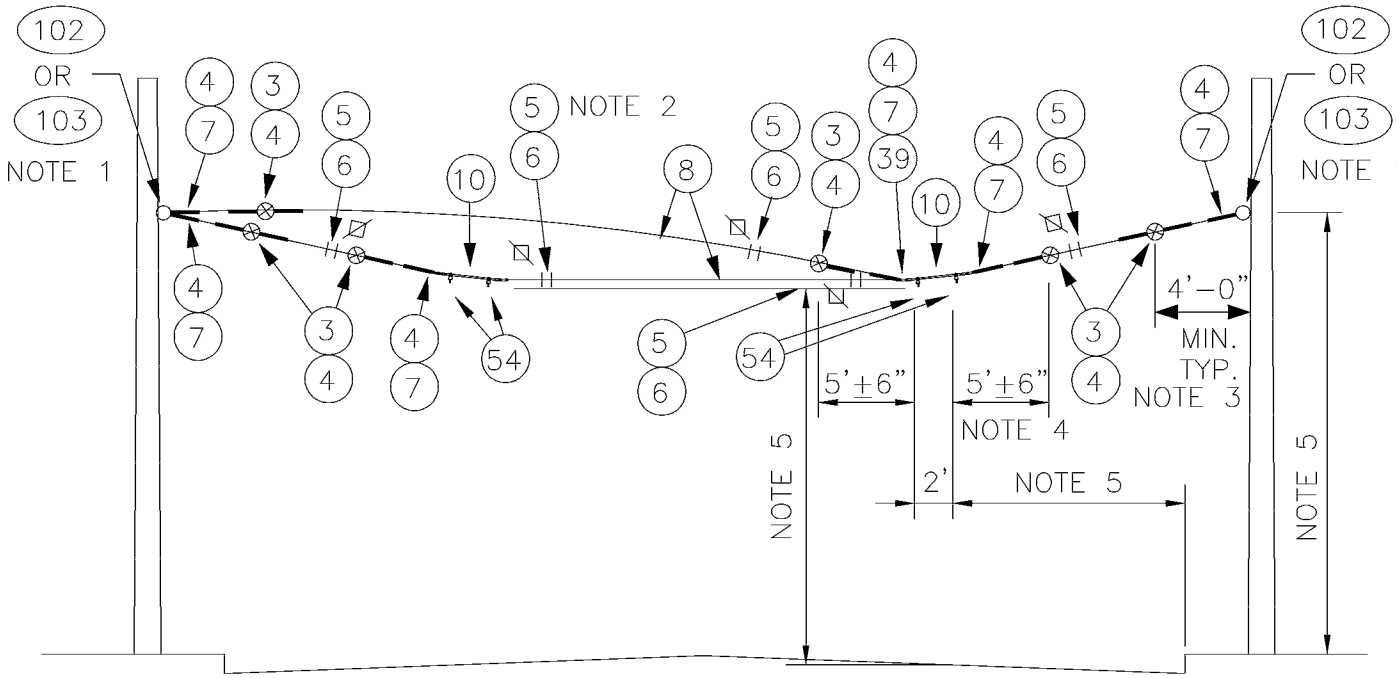

ELEVATION

NOTES

1. A POLE COLLAR OR POLE EYEBOLT IS REQUIRED PER SA-102 OR SA-103 UNLESS A BUILDING EYEBOLT ATTACHMENT IS USED. INSTALLATION HEIGHT IS INDICATED ON THE OVERHEAD DRAWINGS.

2. PROVIDE TENSION ADJUSTMENT POINTS AT LOCATIONS INDICATED BY "⧄". PROVIDE WIRE ROPE CLIPS AT THESE LOCATIONS. SEE SA-166.

3. ANGLE VARIES FROM 5.5° TO 7.5°.

4. SEE SA-370 FOR LIMITED SPACE VARIANCES. SEE SA-167 FOR INSULATED GUY CRITERIA.

5. SEE SA-164 FOR VERTICAL & HORIZONTAL DIMENSIONS TO TROLLEY WIRE.

DESIGNED DPG	CHKD: DOW	King County	DEPARTMENT OF TRANSPORTATION TROLLEY STANDARDS	DATE: JUN 95
DR: TMB	SCALE: NONE			FILE
RECOM.	CONTRACT:		5.5° TO 7.5 ° CURVE SPAN WITH 4 FOOT CURVE RAILS TWO-WAY TRAFFIC	DWG. NO. SA-308
APPROVED				SHT 1 OF 2

V:\Library & Standards\Standards\Trolley\Details\SA-301-309.dwg, SA-308.1, 1/5/2007 12:27:02 PM

MATERIAL LIST

ITEM #	QTY	DESCRIPTION	MANUFACTURER	CAT. NO.
03	6	GUY STRAIN INSUL	PORCELAIN PRODUCTS CO.	504
04	15	GUY GRIP DEADEND	PREFORMED	CDE-3106
05	10	WIRE ROPE CLIP, 5/16"	CROSBY	G450
06	AS REQD	FRICTION TAPE, 3/4" (6 WRAPS)		
07	6	THIMBLE, 3/8" XHD, OPEN	CROSBY	G414
08	VARIES	GUY STRAND	COPPERWELD	8M
10	2	HI-LITE DOUBLE CURVE HANGER	WABCO	54962-3001
39	1	5/8" SHACKLE	WABCO	13722-2000
54	VARIES	CURVE RAIL (5.5° TO 7.5° 4 FT LG)	K & M	851 B412/1
102	VARIES	FORGED THREE-PIECE ADJUSTABLE POLE BAND, ANNEALED & GALVANIZED	KORTICK MFG CO	
103	VARIES	WOOD POLE EYEBOLT	METRO STD	SA-103

V:\Library & Standards\Standards\Trolley\Details\SA-301-309.dwg, SA-308.2, 1/5/2007 12:27:10 PM

DESIGNED DPG	CHKD: DOW	King County	DEPARTMENT OF TRANSPORTATION TROLLEY STANDARDS	DATE: OCT 95
DR: TMB	SCALE: NONE		5.5° TO 7.5° CURVE SPAN WITH 4 FOOT CURVE RAILS TWO-WAY TRAFFIC	FILE
RECOM.	CONTRACT:			DWG. NO. SA-308
APPROVED				SHT 2 OF 2

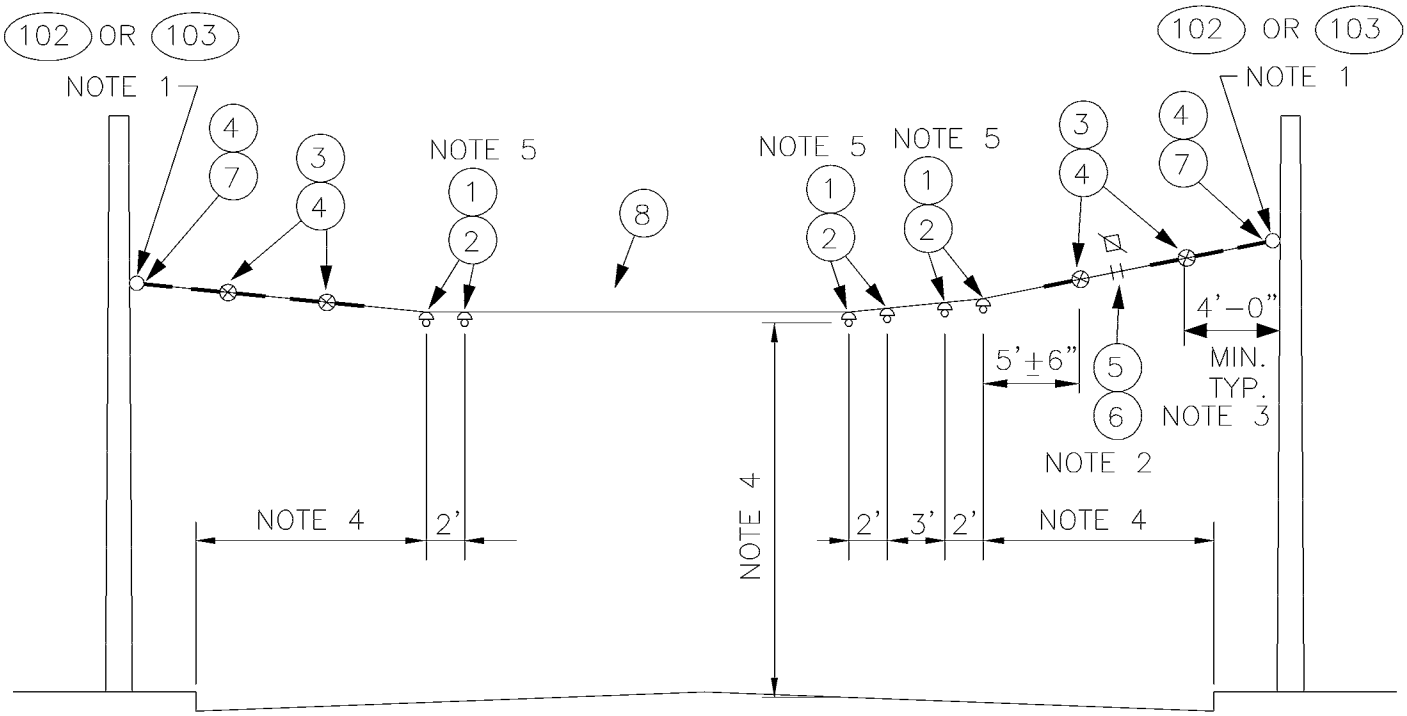

NOTES

1. A POLE COLLAR OR POLE EYEBOLT IS REQUIRED PER SA-102 OR SA-103 UNLESS A BUILDING EYEBOLT ATTACHMENT IS USED. INSTALLATION HEIGHT IS INDICATED ON THE OVERHEAD DRAWINGS.
2. PROVIDE TENSION ADJUSTMENT POINTS AT LOCATIONS INDICATED BY "⧄". PROVIDE WIRE ROPE CLIPS AT THESE LOCATIONS. SEE SA-166.
3. SEE SA-370 FOR LIMITED SPACE VARIANCES.
4. SEE SA-164 FOR VERTICAL & HORIZONTAL DIMENSIONS TO TROLLEY WIRE.
5. MAXIMUM ANGLE IS 0.5°. SEE SA-307, PLAN VIEW.

MATERIAL LIST

ITEM #	QTY	DESCRIPTION	MANUFACTURER	CAT. NO.
01	6	DETROIT CLAMP ASSY	WABCO	19293-3007
02	6	AGC TANGENT SPAN HANGER	WABCO	19360-2000
03	4	GUY STRAIN INSUL	PORCELAIN PRODUCTS CO.	504
04	9	GUY GRIP DEADEND	PREFORMED	CDE-3106
05	2	WIRE ROPE CLIP, 5/16"	CROSBY	G450
06	AS REQD	FRICTION TAPE, 3/4" (6 WRAPS)		
07	2	THIMBLE, 3/8" XHD, OPEN	CROSBY	G414
08	VARIES	GUY STRAND	COPPERWELD	8M
102	VARIES	FORGED THREE-PIECE ADJUSTABLE POLE BAND, ANNEALED & GALVANIZED	KORTICK MFG CO	
103	VARIES	WOOD POLE EYEBOLT	METRO STD	SA-103

DESIGNED DPG	CHKD: DOW	King County	DEPARTMENT OF TRANSPORTATION TROLLEY STANDARDS	DATE: OCT 95
DR: TMB	SCALE: NONE			FILE
RECOM.	CONTRACT:		TANGENT SPAN THREE TRACKS	DWG. NO. SA-309
APPROVED				SHT 1 OF 1

V:\Library & Standards\Standards\Trolley\Details\SA-301-309.dwg, SA-309, 1/5/2007 12:27:18 PM

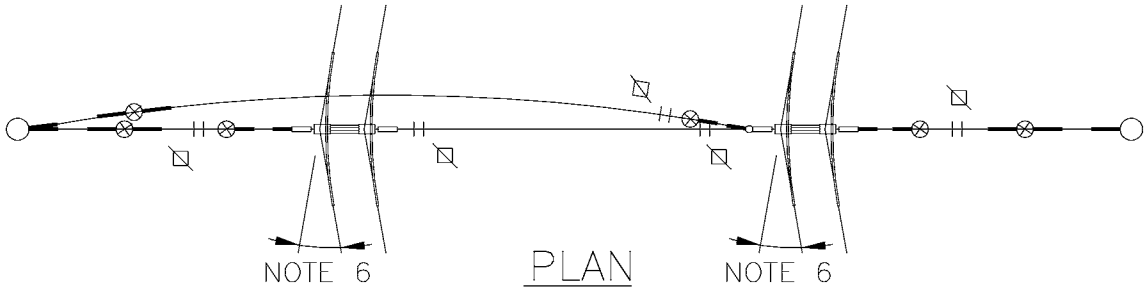

PLAN

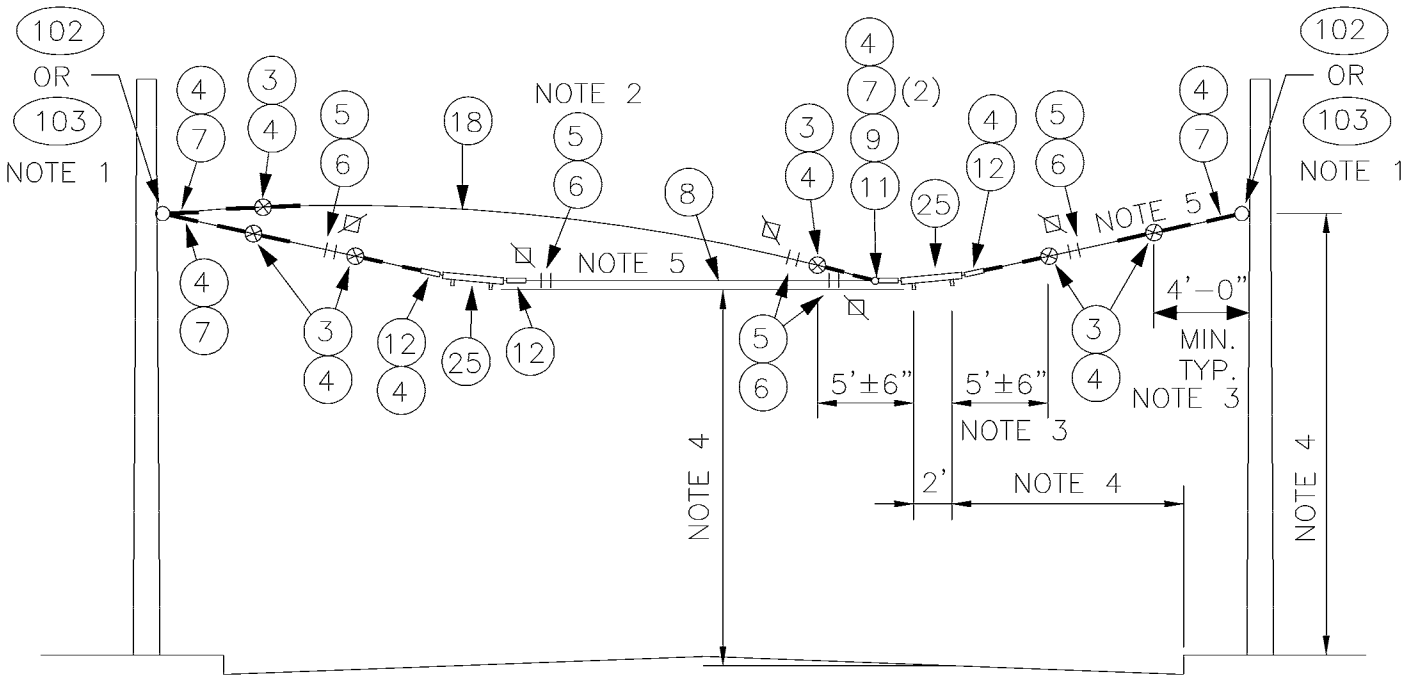

ELEVATION

NOTES

1. A POLE COLLAR OR POLE EYEBOLT IS REQUIRED PER SA–102 OR SA–103 UNLESS A BUILDING EYEBOLT ATTACHMENT IS USED. INSTALLATION HEIGHT IS INDICATED ON THE OVERHEAD DRAWINGS.

2. PROVIDE TENSION ADJUSTMENT POINTS AT LOCATIONS INDICATED BY "⊠". PROVIDE WIRE ROPE CLIPS AT THESE LOCATIONS. SEE SA–166.

3. SEE SA–371 FOR LIMITED SPACE VARIANCES. SEE SA–167 FOR INSULATED GUY CRITERIA.

4. SEE SA–164 FOR VERTICAL & HORIZONTAL DIMENSIONS TO TROLLEY WIRE.

5. INSIDE PULLOFF MAY NOT BE REQUIRED, SEE DRAWINGS FOR EACH INSTALLATION.

6. ANGLE VARIES FROM 8° TO 30°.

DESIGNED DPG	CHKD: DOW	King County	DEPARTMENT OF TRANSPORTATION TROLLEY STANDARDS	DATE: OCT 95
DR: TMB	SCALE: NONE		8° TO 30° CURVE SPAN WITH CURVE SEGMENTS TWO–WAY TRAFFIC	FILE
RECOM.	CONTRACT:			DWG. NO. SA–310
APPROVED				SHT 1 OF 2

V:\Library & Standards\Standards\Trolley\Details\SA-310.1-318.dwg, SA-310.1, 1/5/2007 12:27:28 PM

MATERIAL LIST

ITEM #	QTY	DESCRIPTION	MANUFACTURER	CAT. NO.
03	6	GUY STRAIN INSUL	PORCELAIN	504
04	15	GUY GRIP DEADEND	PRODUCTS CO PREFORMED	CDE-3106
05	10	WIRE ROPE CLIP, 5/16"	CROSBY	G450
06	AS	FRICTION TAPE, 3/4" (6 WRAPS)		
07	REQD	THIMBLE, 3/8" XHD, OPEN	CROSBY	G414
08	5	GUY STRAND	COPPERWELD	8M
09	VARIES	BULL RING	WABCO	18567-2000
12	1	7/8 TRANSLITE STRAIN INSUL CL-CL	WABCO	54975-6120
18	1	7/8 TRANSLITE STRAIN INSUL CL-EYE	WABCO	55339-6120
25	3	GUY STRAND, COVERED	COPPERWELD	8M
	VARIES	CURVE SEGMENT 8-12 DEG TYPE C	WABCO	22301-3014
	VARIES	CURVE SEGMENT 13-27 DEG TYPE C	WABCO	22302-3005
	SEE	CURVE SEGMENT 28-47 DEG TYPE C	WABCO	22303-3005
102	PLAN VARIES	FORGED THREE-PIECE ADJUSTABLE POLE BAND, ANNEALED & GALVANIZED	KORTICK MFG CO	
103	VARIES	WOOD POLE EYEBOLT	METRO STD	SA-103

DESIGNED DPG	CHKD: DOW	King County	DEPARTMENT OF TRANSPORTATION TROLLEY STANDARDS	DATE: OCT 95
DR: TMB	SCALE: NONE		8° TO 30° CURVE SPAN WITH CURVE SEGMENTS TWO-WAY TRAFFIC	FILE
RECOM.	CONTRACT:			DWG. NO. SA-310
APPROVED				SHT 2 OF 2

V:\Library & Standards\Standards\Trolley\Details\SA-310.1-318.dwg, SA-310.2, 1/5/2007 12:27:36 PM

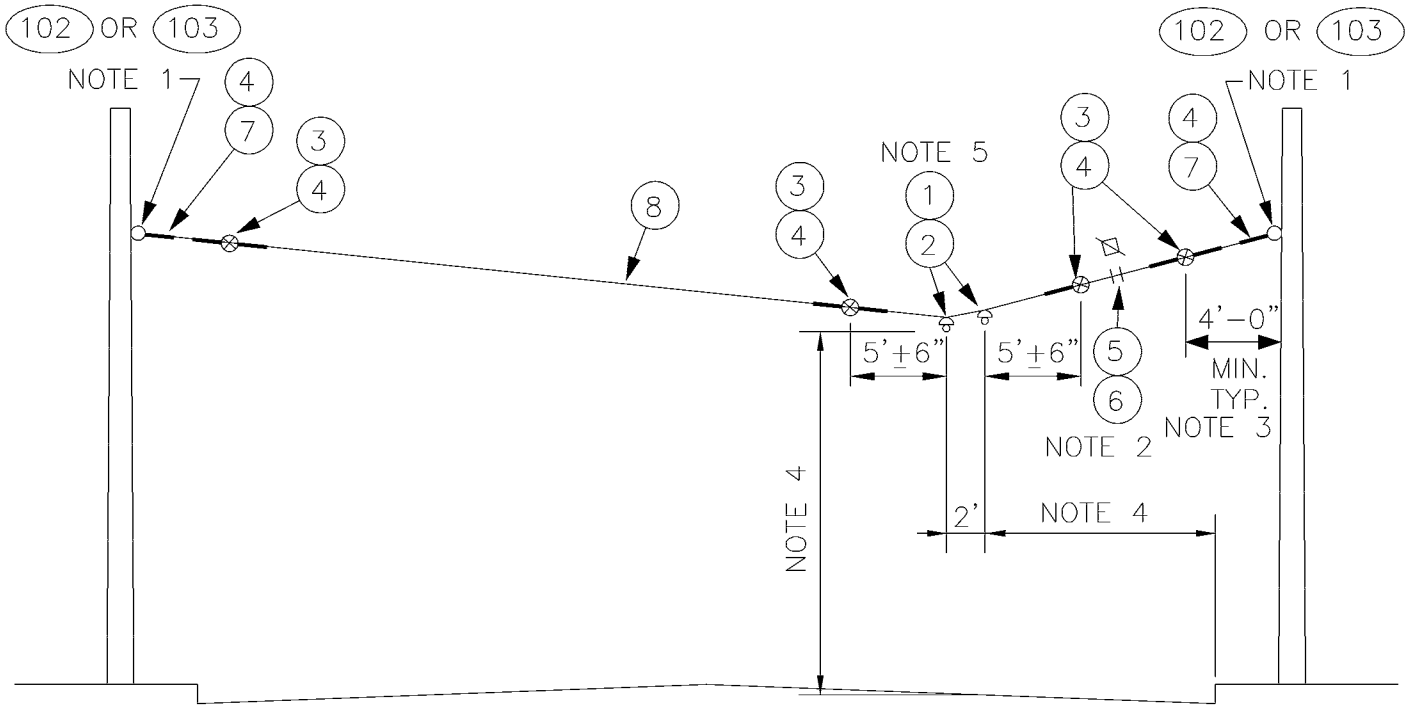

NOTES

1. A POLE COLLAR OR POLE EYEBOLT IS REQUIRED PER SA-102 OR SA-103 UNLESS A BUILDING EYEBOLT ATTACHMENT IS USED. INSTALLATION HEIGHT IS INDICATED ON THE OVERHEAD DRAWINGS.
2. PROVIDE TENSION ADJUSTMENT POINTS AT LOCATIONS INDICATED BY "⧄". PROVIDE WIRE ROPE CLIPS AT THESE LOCATIONS. SEE SA-166.
3. SEE SA-370 FOR LIMITED SPACE VARIANCES.
4. SEE SA-164 FOR VERTICAL & HORIZONTAL DIMENSIONS TO TROLLEY WIRE.
5. MAXIMUM ANGLE IS 0.5°. SEE SA-317 PLAN VIEW.

MATERIAL LIST

ITEM #	QTY	DESCRIPTION	MANUFACTURER	CAT. NO.
01	2	DETROIT CLAMP ASSY	WABCO	19293-3007
02	2	AGC TANGENT SPAN HANGER	WABCO	19360-2000
03	4	GUY STRAIN INSUL	PORCELAIN PRODUCTS CO.	504
04	9	GUY GRIP DEADEND	PREFORMED	CDE-3106
05	2	WIRE ROPE CLIP, 5/16"	CROSBY	G450
06	AS REQD	FRICTION TAPE, 3/4" (6 WRAPS)		
07	10	THIMBLE, 3/8" XHD, OPEN	CROSBY	G414
08	VARIES	GUY STRAND	COPPERWELD	8M
102	VARIES	FORGED THREE-PIECE ADJUSTABLE POLE BAND, ANNEALED & GALVANIZED	KORTICK MFG CO	
103	VARIES	WOOD POLE EYEBOLT	METRO STD	SA-103

DESIGNED: DPG	CHKD: DOW	King County	DEPARTMENT OF TRANSPORTATION TROLLEY STANDARDS	DATE: OCT 95
DR: TMB	SCALE: NONE			FILE
RECOM.	CONTRACT:		TANGENT SPAN ONE-WAY TRAFFIC	DWG. NO. SA-311
APPROVED				SHT 1 OF 1

V:\Library & Standards\Standards\Trolley\Details\SA-310.1-318.dwg, SA-311, 1/5/2007 12:27:43 PM

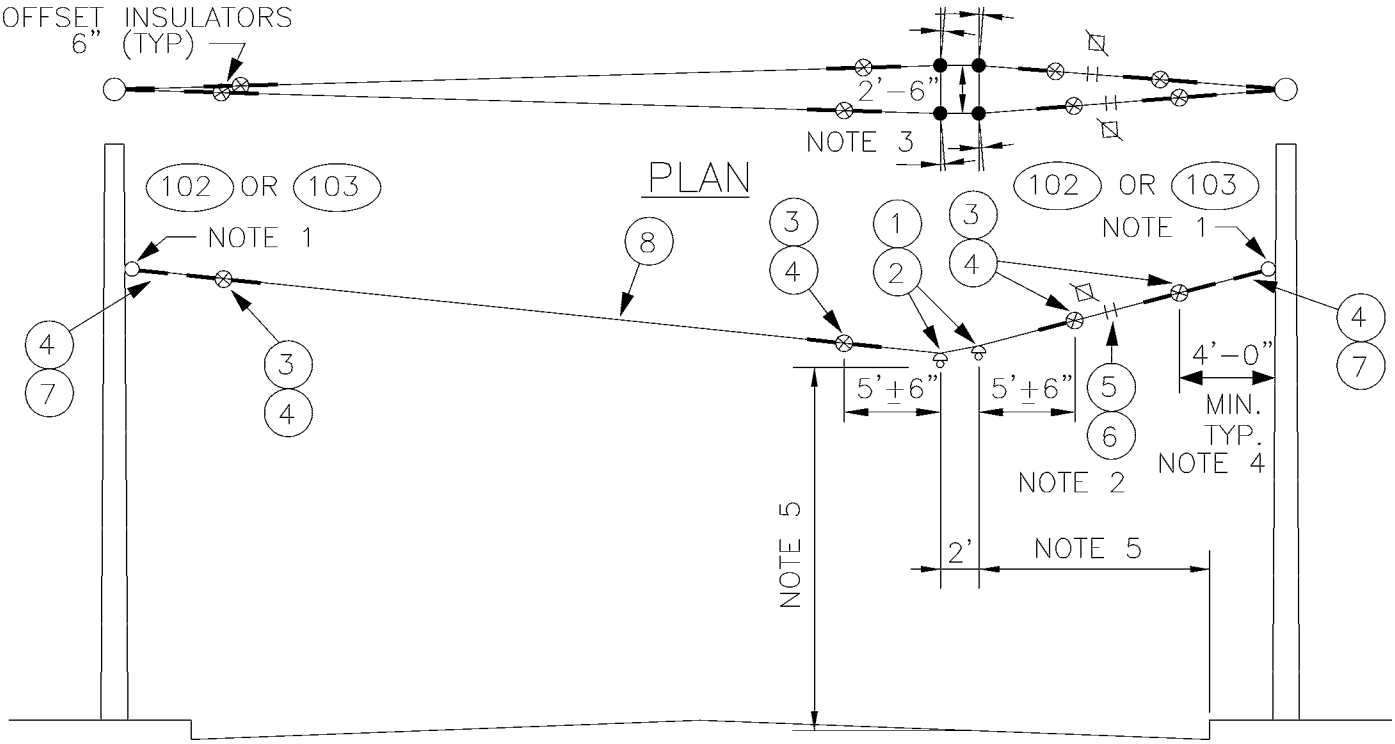

ELEVATION

NOTES

1. A POLE COLLAR OR POLE EYEBOLT IS REQUIRED PER SA-102 OR SA-103 UNLESS A BUILDING EYEBOLT ATTACHMENT IS USED. INSTALLATION HEIGHT IS INDICATED ON THE OVERHEAD DRAWINGS.
2. PROVIDE TENSION ADJUSTMENT POINTS AT LOCATIONS INDICATED BY "⊠". PROVIDE WIRE ROPE CLIPS AT THESE LOCATIONS. SEE SA-166.
3. MAXIMUM ANGLE 1°, 0.5° PER SPAN HANGER.
4. SEE SA-370 FOR LIMITED SPACE VARIANCES.
5. SEE SA-164 FOR VERTICAL & HORIZONTAL DIMENSIONS TO TROLLEY WIRE.

MATERIAL LIST

ITEM #	QTY	DESCRIPTION	MANUFACTURER	CAT. NO.
01	4	DETROIT CLAMP ASSY	WABCO	19293-3007
02	4	AGC TANGENT SPAN HANGER	WABCO	19360-2000
03	8	GUY STRAIN INSUL	PORCELAIN PRODUCTS CO.	504
04	18	GUY GRIP DEADEND	PREFORMED	CDE-3106
05	4	WIRE ROPE CLIP, 5/16"	CROSBY	G450
06	AS REQD	FRICTION TAPE, 3/4" (6 WRAPS)		
07	4	THIMBLE, 3/8" XHD, OPEN	CROSBY	G414
08	VARIES	GUY STRAND	COPPERWELD	8M
102	VARIES	FORGED THREE-PIECE ADJUSTABLE POLE BAND, ANNEALED & GALVANIZED	KORTICK MFG CO	
103	VARIES	WOOD POLE EYEBOLT	METRO STD	SA-103

DESIGNED DPG	CHKD: DOW	King County	DEPARTMENT OF TRANSPORTATION TROLLEY STANDARDS	DATE: OCT 95
DR: TMB	SCALE: NONE		HOLDUP TANGENT SPAN ONE-WAY TRAFFIC	FILE
RECOM.	CONTRACT:			DWG. NO. SA-312
APPROVED				SHT 1 OF 1

V:\Library & Standards\Standards\Trolley\Details\SA-310.1-318.dwg, SA-312, 1/5/2007 12:27:47 PM

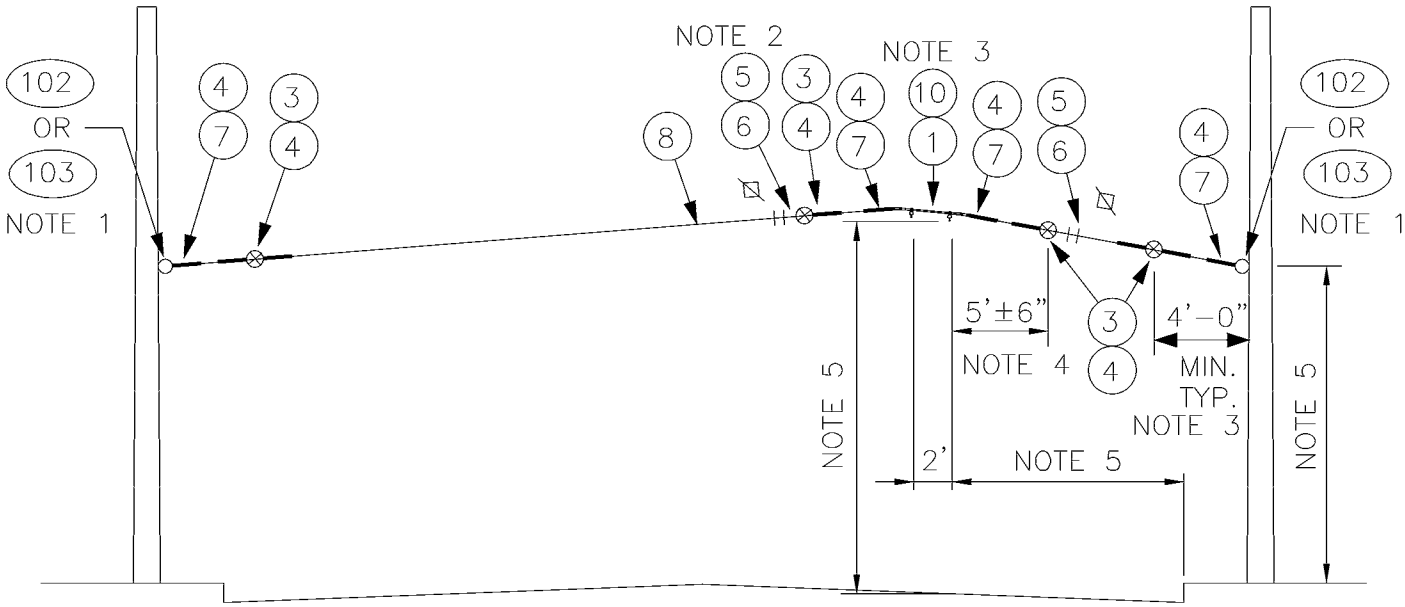

NOTES

1. A POLE COLLAR OR POLE EYEBOLT IS REQUIRED PER SA-102 OR SA-103 UNLESS A BUILDING EYEBOLT ATTACHMENT IS USED. INSTALLATION HEIGHT IS INDICATED ON THE OVERHEAD DRAWINGS.
2. PROVIDE TENSION ADJUSTMENT POINTS AT LOCATIONS INDICATED BY "⊠". PROVIDE WIRE ROPE CLIPS AT THESE LOCATIONS. SEE SA-166.
3. MAXIMUM ANGLE 0.5°. SEE SA-317, PLAN VIEW.
4. SEE SA-370 FOR LIMITED SPACE VARIANCES.
5. SEE SA-164 FOR VERTICAL & HORIZONTAL DIMENSIONS TO TROLLEY WIRE.

MATERIAL LIST

ITEM #	QTY	DESCRIPTION	MANUFACTURER	CAT. NO.
01	2	DETROIT CLAMP ASSY	WABCO	19293-3007
03	4	GUY STRAIN INSUL	PORCELAIN PRODUCTS CO.	504
04	10	GUY GRIP DEADEND	PREFORMED	CDE-3106
05	4	WIRE ROPE CLIP, 5/16"	CROSBY	G450
06	AS REQD	FRICTION TAPE, 3/4" (6 WRAPS)		
07	4	THIMBLE, 3/8" XHD, OPEN	CROSBY	G414
08	VARIES	GUY STRAND	COPPERWELD	8M
10	1	HI-LITE DOUBLE CURVE HANGER	WABCO	54962-3001
102	VARIES	FORGED THREE-PIECE ADJUSTABLE POLE BAND, ANNEALED & GALVANIZED	KORTICK MFG CO	
103	VARIES	WOOD POLE EYEBOLT	METRO STD	SA-103

DESIGNED DPG	CHKD: DOW	King County	DEPARTMENT OF TRANSPORTATION TROLLEY STANDARDS	DATE: OCT 95
DR: TMB	SCALE: NONE			FILE
RECOM.	CONTRACT:		INVERTED TANGENT SPAN ONE-WAY TRAFFIC	DWG. NO. SA-313
APPROVED				SHT 1 OF 1

V:\Library & Standards\Standards\Trolley\Details\SA-310.1-318.dwg, SA-313, 1/5/2007 12:27:52 PM

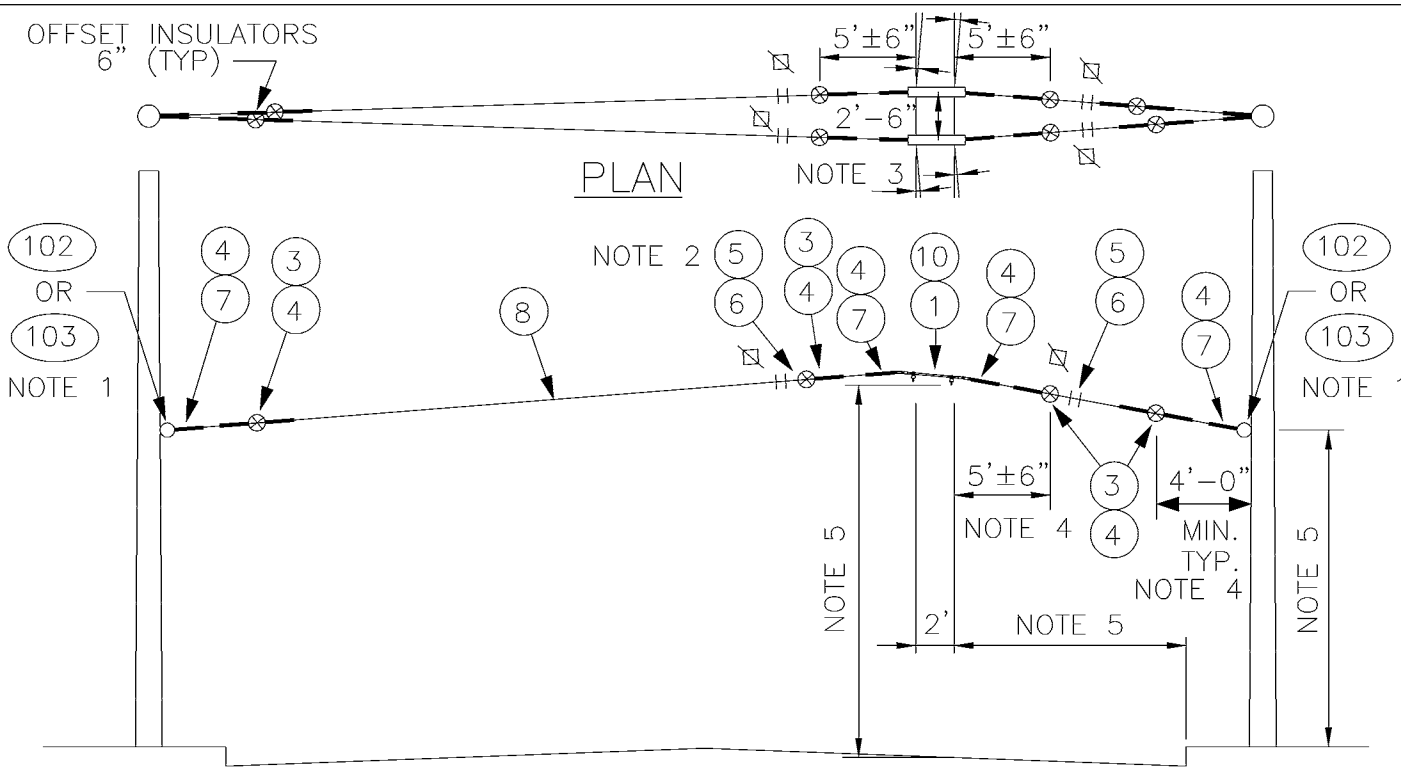

NOTES

1. A POLE COLLAR OR POLE EYEBOLT IS REQUIRED PER SA-102 OR SA-103 UNLESS A BUILDING EYEBOLT ATTACHMENT IS USED. INSTALLATION HEIGHT IS INDICATED ON THE OVERHEAD DRAWINGS.
2. PROVIDE TENSION ADJUSTMENT POINTS AT LOCATIONS INDICATED BY "⊠". PROVIDE WIRE ROPE CLIPS AT THESE LOCATIONS. SEE SA-166.
3. MAXIMUM ANGLE 1 DEGREE, 0.5° PER DOUBLE CURVE HANGER.
4. SEE SA-370 FOR LIMITED SPACE VARIANCES.
5. SEE SA-164 FOR VERTICAL & HORIZONTAL DIMENSIONS TO TROLLEY WIRE.

MATERIAL LIST

ITEM #	QTY	DESCRIPTION	MANUFACTURER	CAT. NO.
01	4	DETROIT CLAMP ASSY	WABCO	19293-3007
03	8	GUY STRAIN INSUL	PORCELAIN PRODUCTS CO.	504
04	20	GUY GRIP DEADEND	PREFORMED	CDE-3106
05	8	WIRE ROPE CLIP, 5/16"	CROSBY	G450
06	AS REQD	FRICTION TAPE, 3/4" (6 WRAPS)		
07	8	THIMBLE, 3/8" XHD, OPEN	CROSBY	G414
08	VARIES	GUY STRAND	COPPERWELD	8M
10	2	HI-LITE DOUBLE CURVE HANGER	WABCO	54962-3001
102	VARIES	FORGED THREE-PIECE ADJUSTABLE POLE BAND, ANNEALED & GALVANIZED	KORTICK MFG CO	
103	VARIES	WOOD POLE EYEBOLT	METRO STD	SA-103

DESIGNED DPG	CHKD: DOW	King County	DEPARTMENT OF TRANSPORTATION TROLLEY STANDARDS	DATE: OCT 95
DR: TMB	SCALE: NONE		HOLDDOWN TANGENT SPAN ONE-WAY TRAFFIC	FILE
RECOM.	CONTRACT:			DWG. NO. SA-314
APPROVED				SHT 1 OF 1

V:\Library & Standards\Standards\Trolley\Details\SA-310.1-318.dwg, SA-314, 1/5/2007 12:27:57 PM

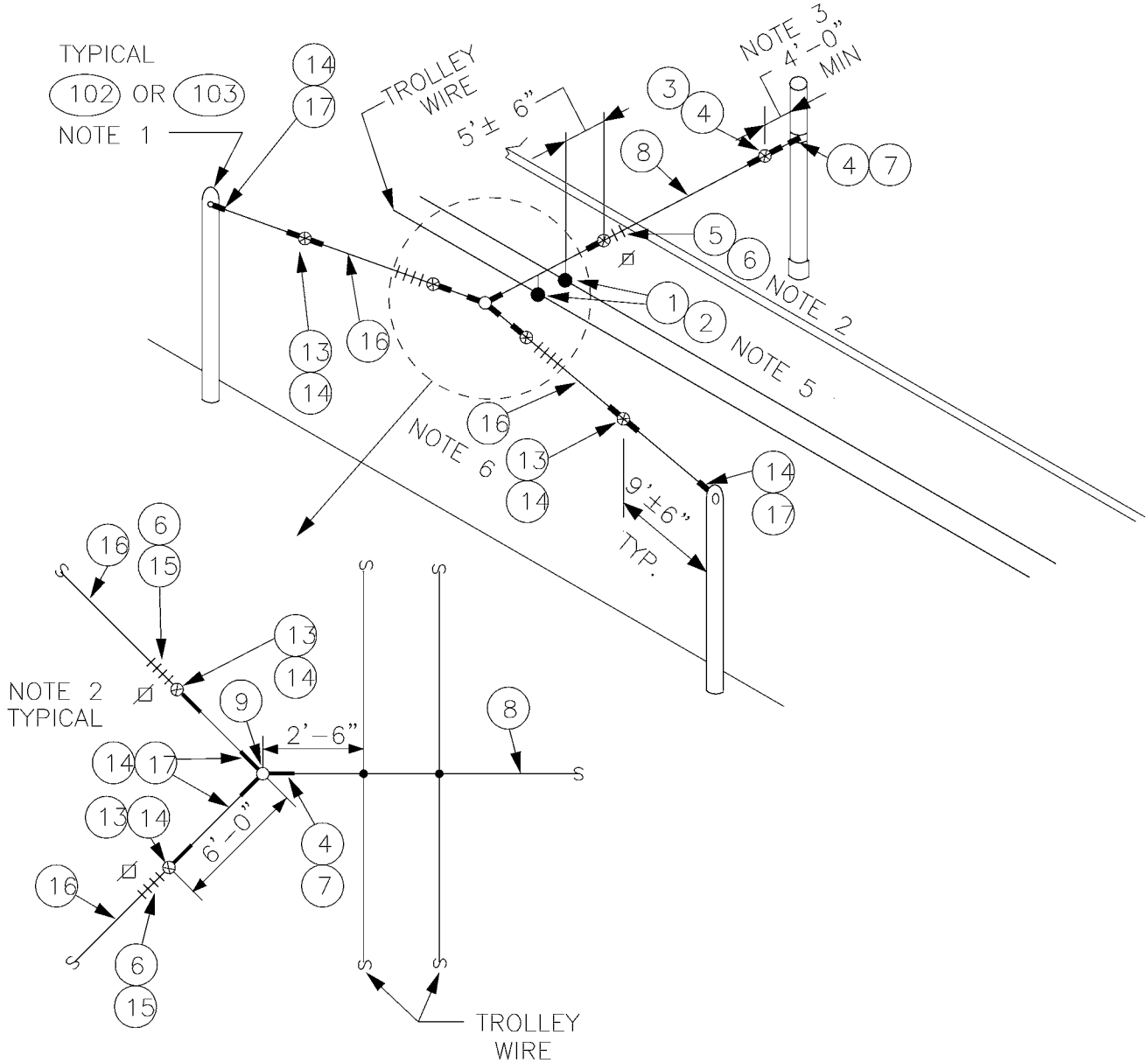

DESIGNED DPG	CHKD: DOW	King County	DEPARTMENT OF TRANSPORTATION TROLLEY STANDARDS	DATE: JUN 95
DR: TMB	SCALE: NONE			FILE
RECOM.	CONTRACT:		BRIDLE TANGENT SPAN ONE-WAY TRAFFIC	DWG. NO. SA-315
APPROVED				SHT 1 OF 2

V:\Library & Standards\Standards\Trolley\Details\SA-310.1-318.dwg, SA-315.1, 1/5/2007 12:28:05 PM

MATERIAL LIST

ITEM #	QTY	DESCRIPTION	MANUFACTURER	CAT. NO.
01	2	DETROIT CLAMP ASSY	WABCO	19293-3007
02	2	AGC TANGENT SPAN HANGER	WABCO	19360-2000
03	VARIES	GUY STRAIN INSUL	PORCELAIN PRODUCTS CO.	504
04	VARIES	GUY GRIP DEADEND	PREFORMED	CDE-3106
05	VARIES	WIRE ROPE CLIP, 5/16"	CROSBY	G450
06	AS REQD	FRICTION TAPE, 3/4" (6 WRAPS)		
07	VARIES	THIMBLE, 3/8" XHD, OPEN	CROSBY	G414
08	VARIES	GUY STRAND	COPPERWELD	8M
09	1	BULL RING	WABCO	18567-2000
13	VARIES	GUY STRAIN INSUL	PORCELAIN PRODUCTS CO.	506
14	VARIES	GUY GRIP DEADEND	PREFORMED	CDE-3115
15	VARIES	WIRE ROPE CLIP, 3/8"	CROSBY	G450
16	VARIES	GUY STRAND	COPPERWELD	16M
17	VARIES	THIMBLE, 1/2" XHD, OPEN	CROSBY	G414
102	VARIES	FORGED THREE-PIECE ADJUSTABLE POLE BAND, ANNEALED & GALVANIZED	KORTICK MFG CO	
103	VARIES	WOOD POLE EYEBOLT	METRO STD	SA-103

NOTES

1. A POLE COLLAR OR POLE EYEBOLT IS REQUIRED PER SA-102 OR SA-103 UNLESS A BUILDING EYEBOLT ATTACHMENT IS USED. INSTALLATION HEIGHT IS INDICATED ON THE OVERHEAD DRAWINGS.

2. PROVIDE TENSION ADJUSTMENT POINTS AT LOCATIONS INDICATED BY "⊠". PROVIDE WIRE ROPE CLIPS AT THESE LOCATIONS. SEE SA-166.

3. SEE SA-370 FOR LIMITED SPACE VARIANCES.

4. SEE SA-164 FOR VERTICAL & HORIZONTAL DIMENSIONS TO TROLLEY WIRE.

5. MAXIMUM ANGLE IS 0.5°. SEE SA-307, PLAN VIEW.

6. IF LOAD SHOWN ON OVERHEAD DRAWINGS IS LESS THAN 2500 LBS, THEN ITEM 8 MAY BE USED INSTEAD OF ITEM 16. THE ASSOCIATED ITEMS SHALL ALSO BE CHANGED I.E. 3 FOR 13, 4 FOR 14, 5 FOR 15 AND 7 FOR 17.

DESIGNED DPG	CHKD: DOW	King County	DEPARTMENT OF TRANSPORTATION TROLLEY STANDARDS	DATE: OCT 95
DR: TMB	SCALE: NONE			FILE
RECOM.	CONTRACT:		BRIDLE TANGENT SPAN ONE-WAY TRAFFIC	DWG. NO. SA-315
APPROVED				SHT 2 OF 2

V:\Library & Standards\Standards\Trolley\Details\SA-310.1-318.dwg, SA-315.2, 1/5/2007 12:28:12 PM

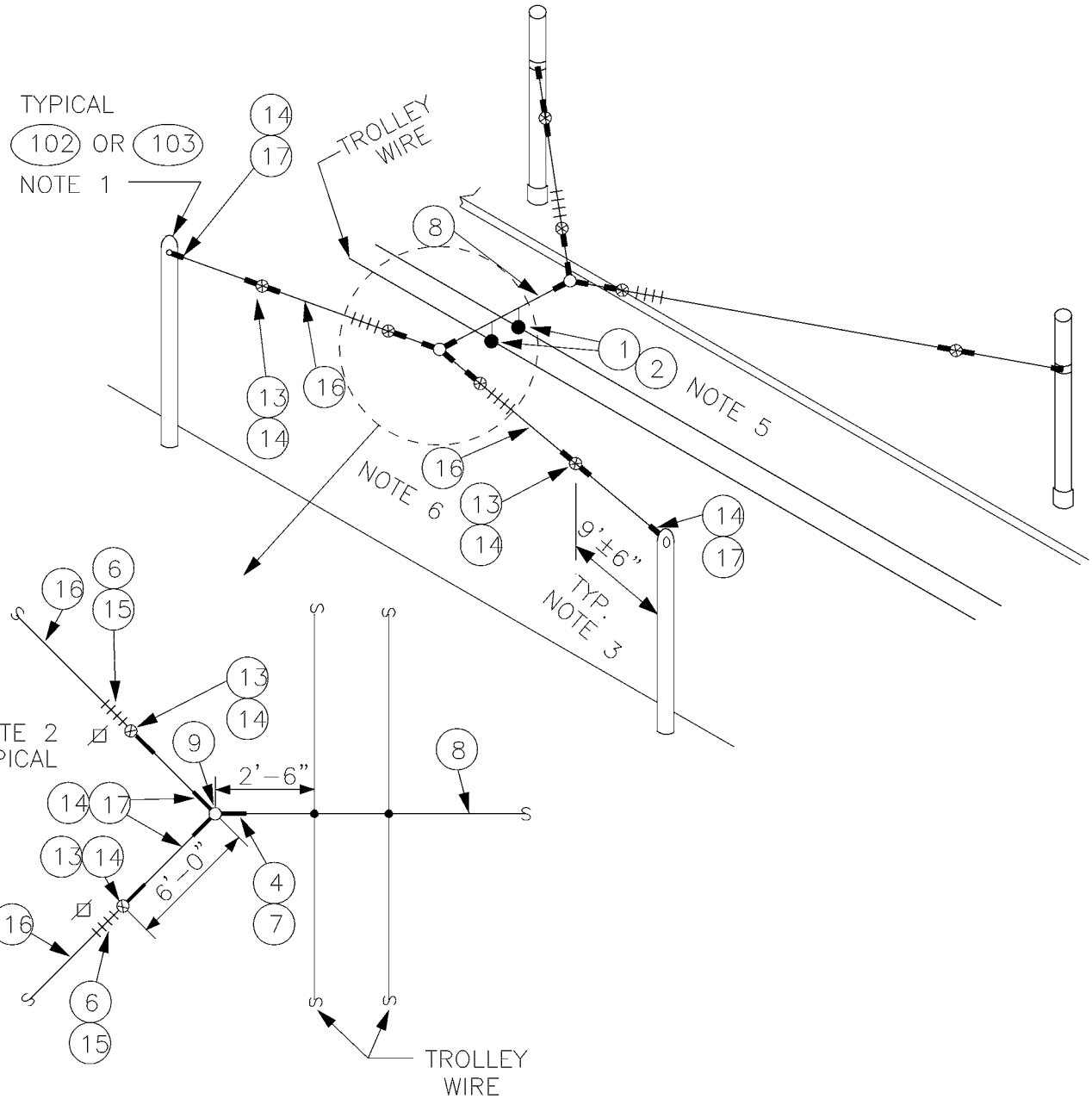

DESIGNED DPG	CHKD: DOW	King County	DEPARTMENT OF TRANSPORTATION TROLLEY STANDARDS	DATE: JUN 95
DR: TMB	SCALE: NONE			FILE
RECOM.	CONTRACT:		DOUBLE BRIDLE TANGENT SPAN ONE-WAY TRAFFIC	DWG. NO. SA-316
APPROVED				SHT 1 OF 2

V:\Library & Standards\Standards\Trolley\Details\SA-310.1-318.dwg, SA-316.1, 1/5/2007 12:28:19 PM

MATERIAL LIST

ITEM #	QTY	DESCRIPTION	MANUFACTURER	CAT. NO.
01	2	DETROIT CLAMP ASSY	WABCO	19293-3007
02	2	AGC TANGENT SPAN HANGER	WABCO	19360-2000
03	VARIES	GUY STRAIN INSUL	PORCELAIN PRODUCTS CO.	504
04	VARIES	GUY GRIP DEADEND	PREFORMED	CDE-3106
05	VARIES	WIRE ROPE CLIP, 5/16"	CROSBY	G450
06	AS REQD	FRICTION TAPE, 3/4" (6 WRAPS)		
07	VARIES	THIMBLE, 3/8" XHD, OPEN	CROSBY	G414
08	VARIES	GUY STRAND	COPPERWELD	8M
09	2	BULL RING	WABCO	18567-2000
13	VARIES	GUY STRAIN INSUL	PORCELAIN PRODUCTS CO.	506
14	VARIES	GUY GRIP DEADEND	PREFORMED	CDE-3115
15	VARIES	WIRE ROPE CLIP, 3/8"	CROSBY	G450
16	VARIES	GUY STRAND	COPPERWELD	16M
17	VARIES	THIMBLE, 1/2" XHD, OPEN	CROSBY	G414
102	VARIES	FORGED THREE-PIECE ADJUSTABLE POLE BAND, ANNEALED & GALVANIZED	KORTICK MFG CO	
103	VARIES	WOOD POLE EYEBOLT	METRO STD	SA-103

NOTES

1. A POLE COLLAR OR POLE EYEBOLT IS REQUIRED PER SA-102 OR SA-103 UNLESS A BUILDING EYEBOLT ATTACHMENT IS USED. INSTALLATION HEIGHT IS INDICATED ON THE OVERHEAD DRAWINGS.

2. PROVIDE TENSION ADJUSTMENT POINTS AT LOCATIONS INDICATED BY "⊠". PROVIDE WIRE ROPE CLIPS AT THESE LOCATIONS. SEE SA-166.

3. SEE SA-370 FOR LIMITED SPACE VARIANCES.

4. SEE SA-164 FOR VERTICAL & HORIZONTAL DIMENSIONS TO TROLLEY WIRE.

5. MAXIMUM ANGLE IS 0.5°. SEE SA-307, PLAN VIEW.

6. IF LOAD SHOWN ON OVERHEAD DRAWINGS IS LESS THAN 2500 LBS, THEN ITEM 8 MAY BE USED INSTEAD OF ITEM 16. THE ASSOCIATED ITEMS SHALL ALSO BE CHANGED I.E. 3 FOR 13, 4 FOR 14, 5 FOR 15 AND 7 FOR 17.

DESIGNED DPG	CHKD: DOW	King County	DEPARTMENT OF TRANSPORTATION TROLLEY STANDARDS	DATE: OCT 95
DR: TMB	SCALE: NONE			FILE
RECOM.	CONTRACT:		DOUBLE BRIDLE TANGENT SPAN ONE-WAY TRAFFIC	DWG. NO. SA-316
APPROVED				SHT 2 OF 2

V:\Library & Standards\Standards\Trolley\Details\SA-310.1-318.dwg, SA-316.2, 1/5/2007 12:28:25 PM

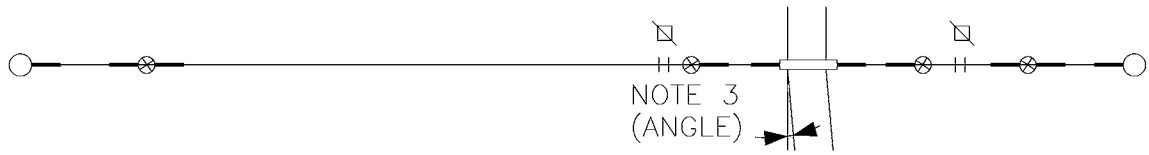

PLAN

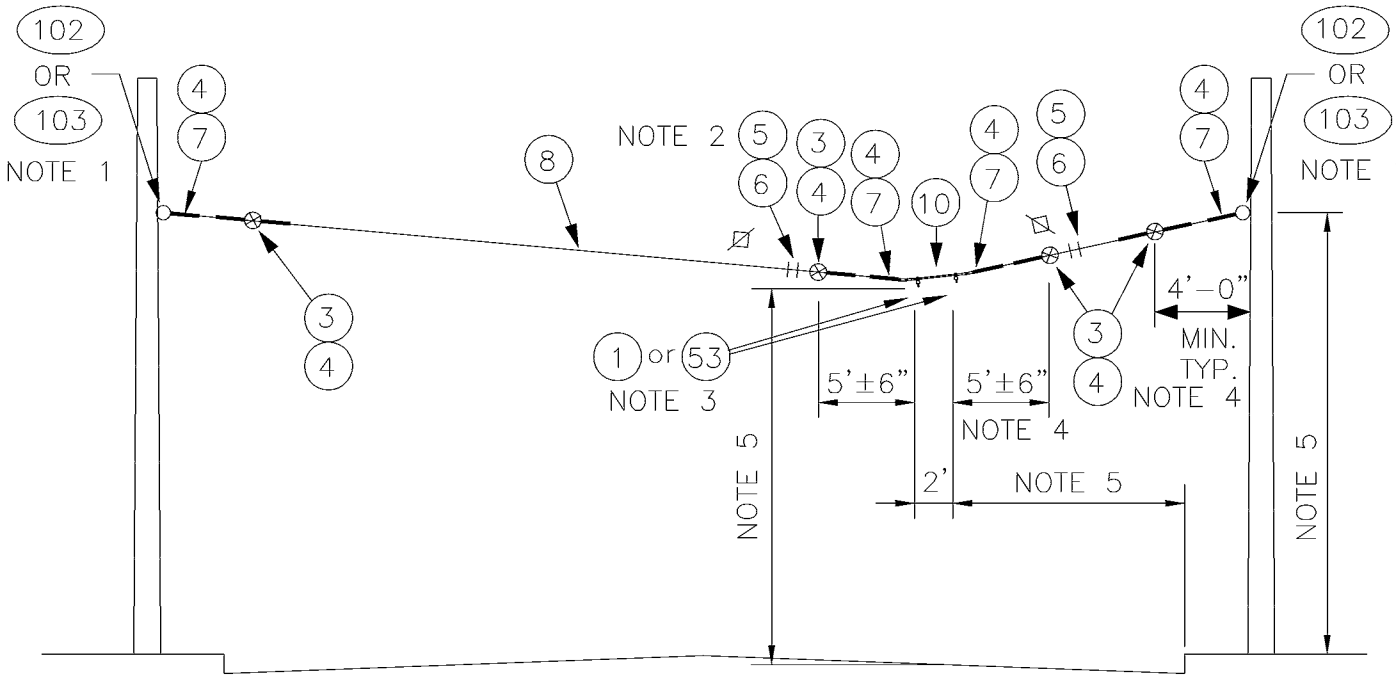

ELEVATION

NOTES

1. A POLE COLLAR OR POLE EYEBOLT IS REQUIRED PER SA–102 OR SA–103 UNLESS A BUILDING EYEBOLT ATTACHMENT IS USED. INSTALLATION HEIGHT IS INDICATED ON THE OVERHEAD DRAWINGS.

2. PROVIDE TENSION ADJUSTMENT POINTS AT LOCATIONS INDICATED BY "⊠". PROVIDE WIRE ROPE CLIPS AT THESE LOCATIONS. SEE SA–166.

3. ANGLE VARIES FROM 1° TO 5°. USE ITEM 1 FOR 1° TO 2.5° ANGLE. USE ITEM 53 FOR 3° TO 5° ANGLE.

4. SEE SA–370 FOR LIMITED SPACE VARIANCES.

5. SEE SA–164 FOR VERTICAL & HORIZONTAL DIMENSIONS TO TROLLEY WIRE.

DESIGNED DPG	CHKD: DOW	King County	DEPARTMENT OF TRANSPORTATION TROLLEY STANDARDS	DATE: JUN 95
DR: TMB	SCALE: NONE			FILE
RECOM.	CONTRACT:		1° TO 5° CURVE SPAN WITH 2 FOOT CURVE RAILS ONE–WAY TRAFFIC	DWG. NO. SA–317
APPROVED				SHT 1 OF 2

V:\Library & Standards\Standards\Trolley\Details\SA-310.1-318.dwg, SA-317.1, 1/5/2007 12:28:32 PM

MATERIAL LIST

ITEM #	QTY	DESCRIPTION	MANUFACTURER	CAT. NO.
01	VARIES	DETROIT CLAMP ASSY	WABCO	19293-3007
03	4	GUY STRAIN INSUL	PORCELAIN PRODUCTS CO.	504
04	10	GUY GRIP DEADEND	PREFORMED	CDE-3106
05	4	WIRE ROPE CLIP, 5/16"	CROSBY	G450
06	AS REQD	FRICTION TAPE, 3/4" (6 WRAPS)		
07	4	THIMBLE, 3/8" XHD, OPEN	CROSBY	G414
08	VARIES	GUY STRAND	COPPERWELD	8M
10	1	HI-LITE DOUBLE CURVE HANGER	WABCO	54962-3001
53	VARIES	CURVE RAIL (1° TO 5° 2 FT LG)	K & M	851 B412/0
102	VARIES	FORGED THREE-PIECE ADJUSTABLE POLE BAND, ANNEALED & GALVANIZED	KORTICK MFG CO	
103	VARIES	WOOD POLE EYEBOLT	METRO STD	SA-103

DESIGNED: DPG	CHKD: DOW	King County	DEPARTMENT OF TRANSPORTATION TROLLEY STANDARDS	DATE: OCT 95
DR: TMB	SCALE: NONE		1° TO 5° CURVE SPAN WITH 2 FOOT CURVE RAILS ONE-WAY TRAFFIC	FILE
RECOM.	CONTRACT:			DWG. NO. SA-317
APPROVED				SHT 2 OF 2

V:\Library & Standards\Standards\Trolley\Details\SA-310.1-318.dwg, SA-317.2, 1/5/2007 12:28:37 PM

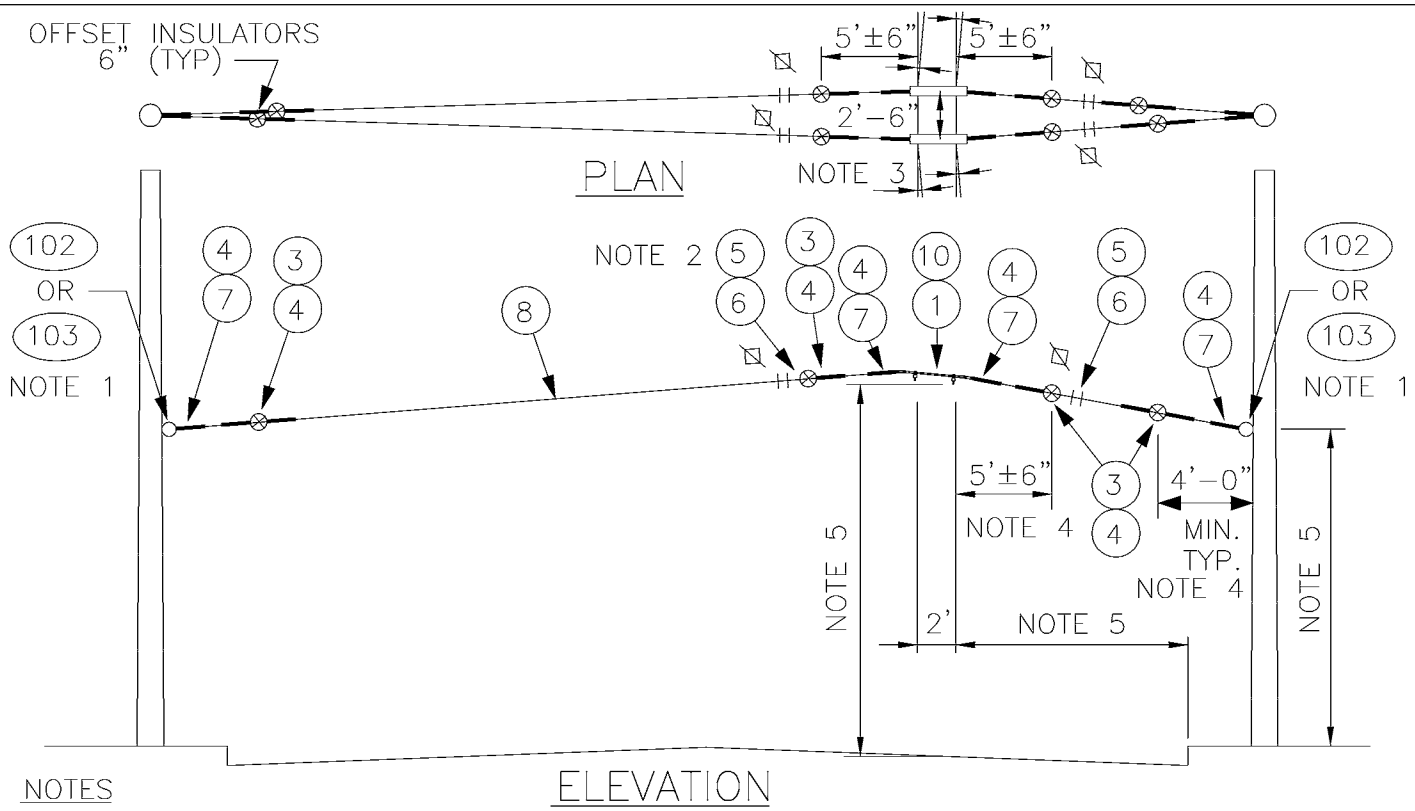

NOTES

1. A POLE COLLAR OR POLE EYEBOLT IS REQUIRED PER SA-102 OR SA-103 UNLESS A BUILDING EYEBOLT ATTACHMENT IS USED. INSTALLATION HEIGHT IS INDICATED ON THE OVERHEAD DRAWINGS.
2. PROVIDE TENSION ADJUSTMENT POINTS AT LOCATIONS INDICATED BY "⊠". PROVIDE WIRE ROPE CLIPS AT THESE LOCATIONS. SEE SA-166.
3. MAXIMUM ANGLE 1 DEGREE, 0.5° PER DOUBLE CURVE HANGER.
4. SEE SA-370 FOR LIMITED SPACE VARIANCES.
5. SEE SA-164 FOR VERTICAL & HORIZONTAL DIMENSIONS TO TROLLEY WIRE.

MATERIAL LIST

ITEM #	QTY	DESCRIPTION	MANUFACTURER	CAT. NO.
01	4	DETROIT CLAMP ASSY	WABCO	19293-3007
03	8	GUY STRAIN INSUL	PORCELAIN PRODUCTS CO.	504
04	20	GUY GRIP DEADEND	PREFORMED	CDE-3106
05	8	WIRE ROPE CLIP, 5/16"	CROSBY	G450
06	AS REQD	FRICTION TAPE, 3/4" (6 WRAPS)		
07	8	THIMBLE, 3/8" XHD, OPEN	CROSBY	G414
08	VARIES	GUY STRAND	COPPERWELD	8M
10	2	HI-LITE DOUBLE CURVE HANGER	WABCO	54962-3001
102	VARIES	FORGED THREE-PIECE ADJUSTABLE POLE BAND, ANNEALED & GALVANIZED	KORTICK MFG CO	
103	VARIES	WOOD POLE EYEBOLT	METRO STD	SA-103

DESIGNED DPG	CHKD: DOW	King County	DEPARTMENT OF TRANSPORTATION TROLLEY STANDARDS	DATE: OCT 95
DR: TMB	SCALE: NONE			FILE
RECOM.	CONTRACT:		5.5° TO 7.5° CURVE SPAN WITH 4 FOOT CURVE RAILS ONE-WAY TRAFFIC	DWG. NO. SA-318
APPROVED				SHT 1 OF 1

V:\Library & Standards\Standards\Trolley\Details\SA-310.1-318.dwg, SA-318, 1/5/2007 12:28:42 PM

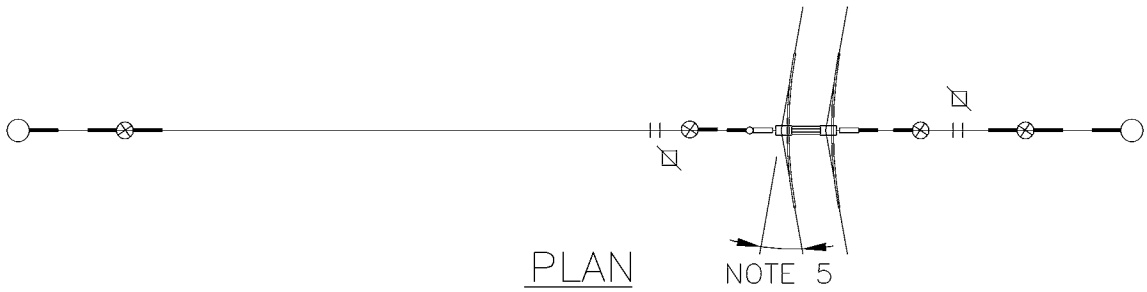

PLAN

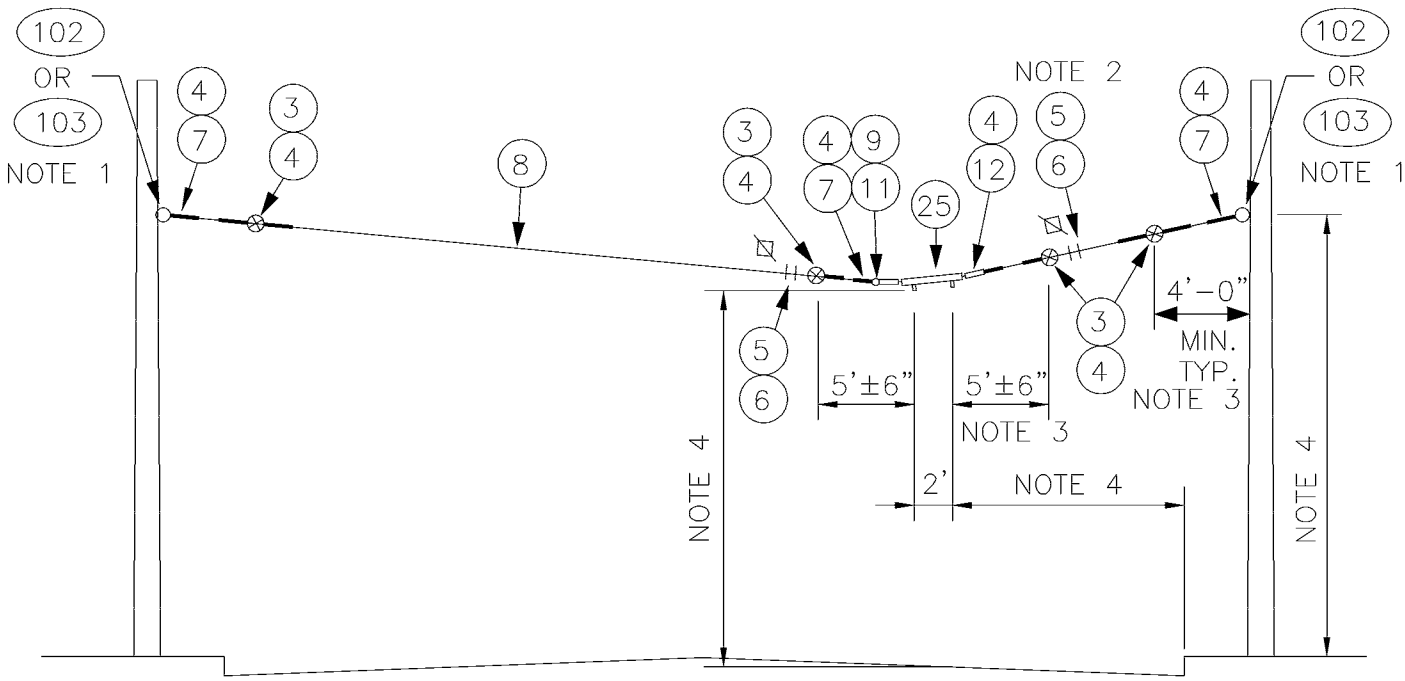

ELEVATION

NOTES

1. A POLE COLLAR OR POLE EYEBOLT IS REQUIRED PER SA-102 OR SA-103 UNLESS A BUILDING EYEBOLT ATTACHMENT IS USED. INSTALLATION HEIGHT IS INDICATED ON THE OVERHEAD DRAWINGS.
2. PROVIDE TENSION ADJUSTMENT POINTS AT LOCATIONS INDICATED BY "⊠". PROVIDE WIRE ROPE CLIPS AT THESE LOCATIONS. SEE SA-166.
3. SEE SA-370 FOR LIMITED SPACE VARIANCES.
4. SEE SA-164 FOR VERTICAL & HORIZONTAL DIMENSIONS TO TROLLEY WIRE.
5. ANGLE VARIES FROM 8° TO 30°.

DESIGNED DPG	CHKD: DOW	King County	DEPARTMENT OF TRANSPORTATION TROLLEY STANDARDS	DATE: OCT 95
DR: TMB	SCALE: NONE			FILE
RECOM.	CONTRACT:		8° TO 30° CURVE SPAN WITH CURVE SEGMENT ONE-WAY TRAFFIC	DWG. NO. SA-320
APPROVED				SHT 1 OF 2

V:\Library & Standards\Standards\Trolley\Details\SA-320.1-325.dwg, SA-320.1, 1/5/2007 12:28:48 PM

MATERIAL LIST

ITEM #	QTY	DESCRIPTION	MANUFACTURER	CAT. NO.
03	4	GUY STRAIN INSUL	PORCELAIN PRODUCTS CO.	504
04	10	GUY GRIP DEADEND	PREFORMED	CDE-3106
05	4	WIRE ROPE CLIP, 5/16"	CROSBY	G450
06	AS REQD	FRICTION TAPE, 3/4" (6 WRAPS)		
07	4	THIMBLE, 3/8" XHD, OPEN	CROSBY	G414
08	VARIES	GUY STRAND	COPPERWELD	8M
12	2	7/8 TRANSLITE STRAIN INSUL CL-EYE	WABCO	55339-6120
25	VARIES (SEE PLAN)	CURVE SEGMENT 8-12 DEG TYPE C CURVE SEGMENT 13-27 DEG TYPE C CURVE SEGMENT 28-47 DEG TYPE C	WABCO WABCO WABCO	22301-3014 22302-3005 22303-3005
102	VARIES	FORGED THREE-PIECE ADJUSTABLE POLE BAND, ANNEALED & GALVANIZED	KORTICK MFG CO	
103	VARIES	WOOD POLE EYEBOLT	METRO STD	SA-103

V:\Library & Standards\Standards\Trolley\Details\SA-320.1-325.dwg, SA-320.2, 1/5/2007 12:28:53 PM

DESIGNED DPG	CHKD: DOW	King County	DEPARTMENT OF TRANSPORTATION TROLLEY STANDARDS	DATE: OCT 95
DR: TMB	SCALE: NONE		8° TO 30° CURVE SPAN WITH CURVE SEGMENT ONE-WAY TRAFFIC	FILE
RECOM.	CONTRACT:			DWG. NO. SA-320
APPROVED				SHT 2 OF 2

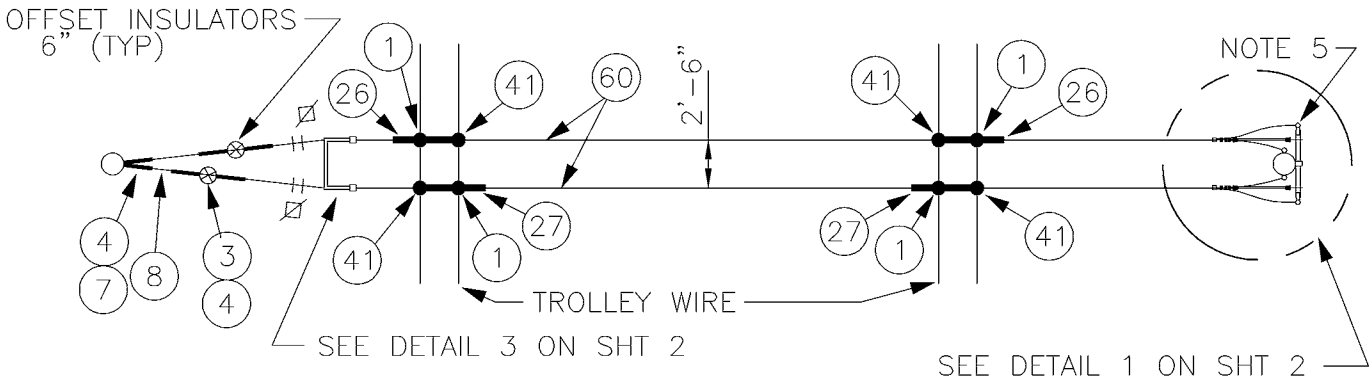

PLAN

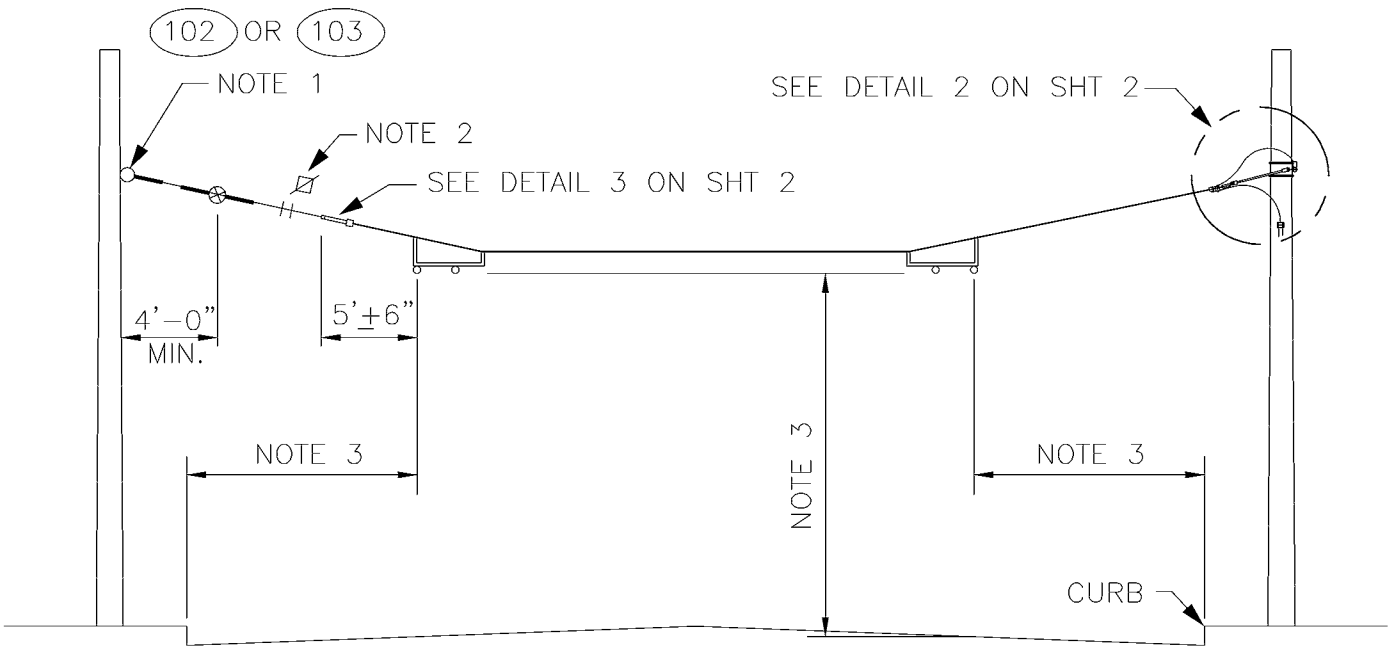

ELEVATION

NOTES:

1. A POLE COLLAR, OR POLE EYEBOLT IS REQUIRED PER SA-102 OR SA-103 UNLESS A BUILDING EYEBOLT ATTACHMENT IS USED. INSTALLATION HEIGHT IS INDICATED ON THE OVERHEAD DRAWINGS.
2. PROVIDE TENSION ADJUSTMENT POINTS AT LOCATIONS INDICATED BY "⊠". PROVIDE WIRE ROPE CLIPS AT THESE LOCATIONS. SEE SA-166.
3. SEE SA-164 FOR HORIZONTAL & VERTICAL DIMENSIONS TO TROLLEY WIRE.
4. CONNECT FEEDER RISER TO FEED SPAN. SEE SA-402.
5. INSTALL LIGHTNING ARRESTERS PER SA-401.

DESIGNED DPG	CHKD: DOW	King County	DEPARTMENT OF TRANSPORTATION TROLLEY STANDARDS	DATE: OCT 95
DR: MM	SCALE: NONE			FILE
RECOM.	CONTRACT:		DOUBLE FEEDER SPAN TWO-WAY TRAFFIC	DWG. NO. SA-321
APPROVED				SHT 1 OF 3

V:\Library & Standards\Standards\Trolley\Details\SA-320.1-325.dwg, SA-321.1, 1/5/2007 12:28:57 PM

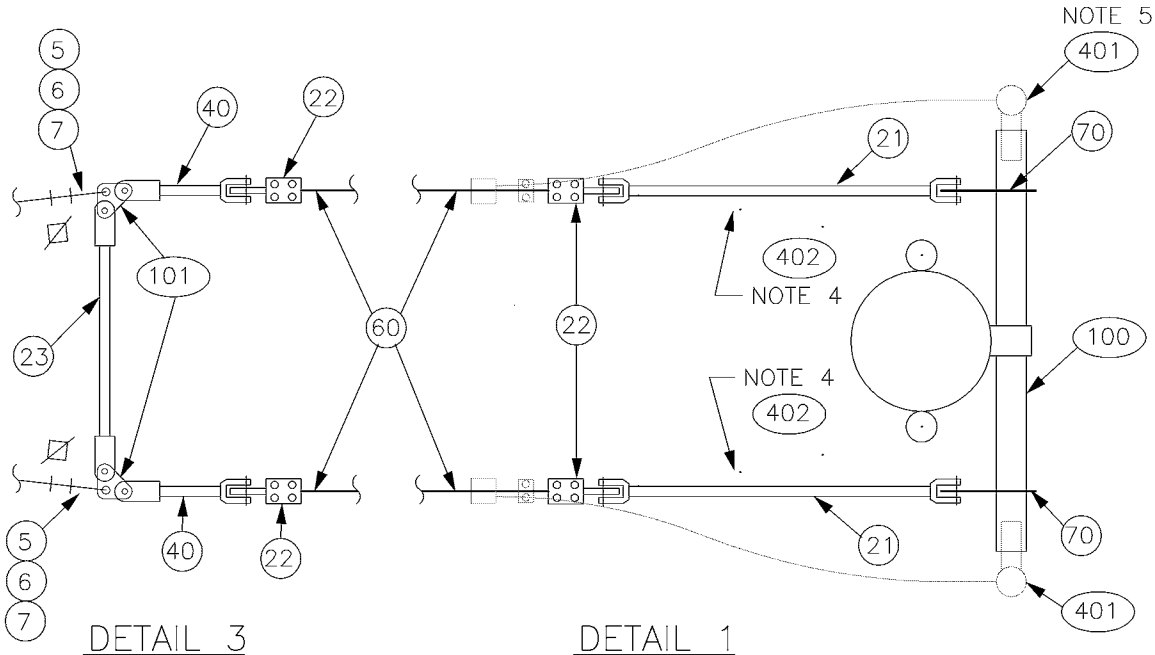

DETAIL 3

DETAIL 1

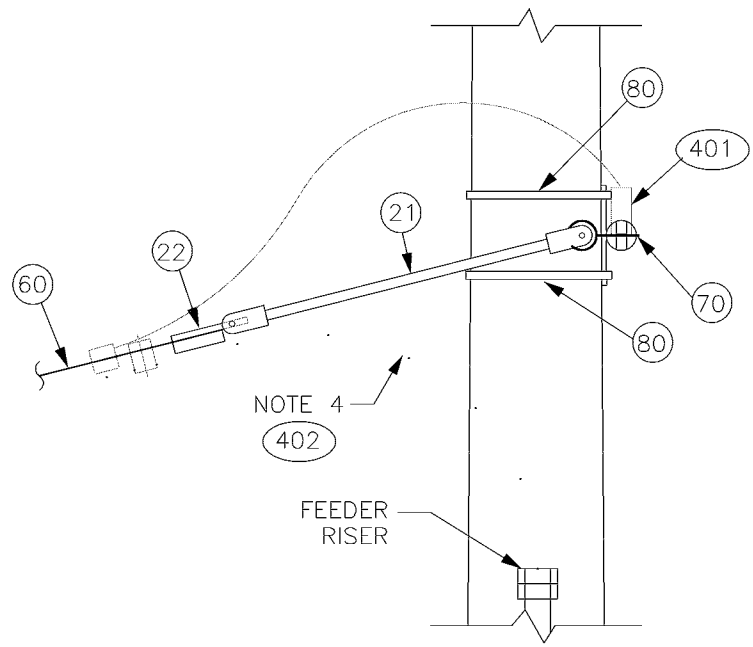

DETAIL 2

V:\Library & Standards\Standards\Trolley\Details\SA-320.1-325.dwg, SA-321.2, 1/5/2007 12:29:02 PM

DESIGNED DPG	CHKD: DOW	King County	DEPARTMENT OF TRANSPORTATION TROLLEY STANDARDS	DATE: JUN 95
DR: MM	SCALE: NONE		DOUBLE FEEDER SPAN TWO-WAY TRAFFIC	FILE
RECOM.	CONTRACT:			DWG. NO. SA-321
APPROVED				SHT 2 OF 3

MATERIAL LIST

ITEM #	QTY	DESCRIPTION	MANUFACTURER	CAT. NO.
01	4	DETROIT CLAMP ASSY	WABCO	19293-3007
03	2	GUY STRAIN INSUL	PORCELAIN PRODUCTS CO.	504
04	6	GUY GRIP DEADEND	PREFORMED	CDE-3106
05	4	WIRE ROPE CLIP, 5/16"	CROSBY	G450
06	AS REQD	FRICTION TAPE, 3/4" (6 WRAPS)		
07	4	THIMBLE, 3/8" XHD, OPEN	CROSBY	G414
08	VARIES	GUY STRAND	COPPERWELD	8M
21	2	7/8 TRANSLITE STRAIN INSUL CL-CL	WABCO	54975-6360
22	4	CLAMP STRAIN EYE	WABCO	10571-2000
23	1	7/8 TRANSLITE STRAIN INSUL CL-CL	WABCO	54975-6260
26	2	TYPE PH-4 POS FEED SPAN HANGER	WABCO	54937-3002
27	2	TYPE PH-5 NEG FEED SPAN HANGER	WABCO	54936-3002
40	2	7/8 TRANSLITE STRAIN INSUL CL-90	WABCO	54995-6120
41	4	H.S.P. FEEDER CLAMP ASSY, BRONZE	WABCO	19879-2000
60	AS REQD	FEED SPAN CABLE 500 KCM CU, UN-SHIELDED, 5 KV EPR W/ PVC JACKET		
70	2	EYEBOLT, 5/8" X 6" W/2 NUTS & LOCKWASHER		
80	AS REQD	3/4" X 0.030" SS BANDING TYPE 201	BAND-IT	C206
100	VARIES	EPOXIROD DEADEND ARM	CHANCE	C653-1023
101	2	STRAIN PLATE	METRO STD	SA-101
102	VARIES	FORGED THREE-PIECE ADJUSTABLE POLE BAND, ANNEALED & GALVANIZED	KORTICK MFG CO	
103	VARIES	WOOD POLE EYEBOLT	METRO STD	SA-103
401	AS REQD	LIGHTNING ARRESTER	METRO STD	SA-401
402	AS REQD	FEEDER RISER	METRO STD	SA-402

DESIGNED DPG	CHKD: DPG	King County	DEPARTMENT OF TRANSPORTATION TROLLEY STANDARDS	DATE: OCT 95
DR: DOW	SCALE: NONE		DOUBLE FEEDER SPAN TWO-WAY TRAFFIC	FILE
RECOM.	CONTRACT:			DWG. NO. SA-321
APPROVED				SHT 3 OF 3

V:\Library & Standards\Standards\Trolley\Details\SA-320.1-325.dwg, SA-321.3, 1/5/2007 12:29:06 PM

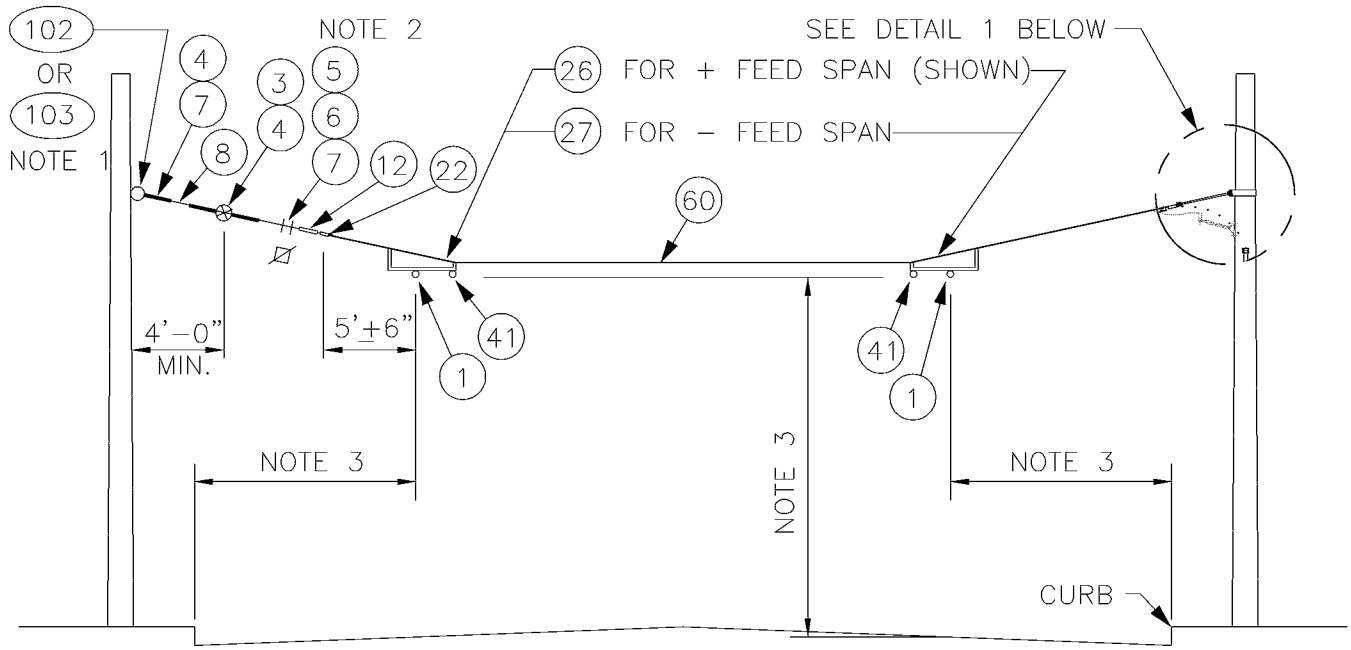

ELEVATION

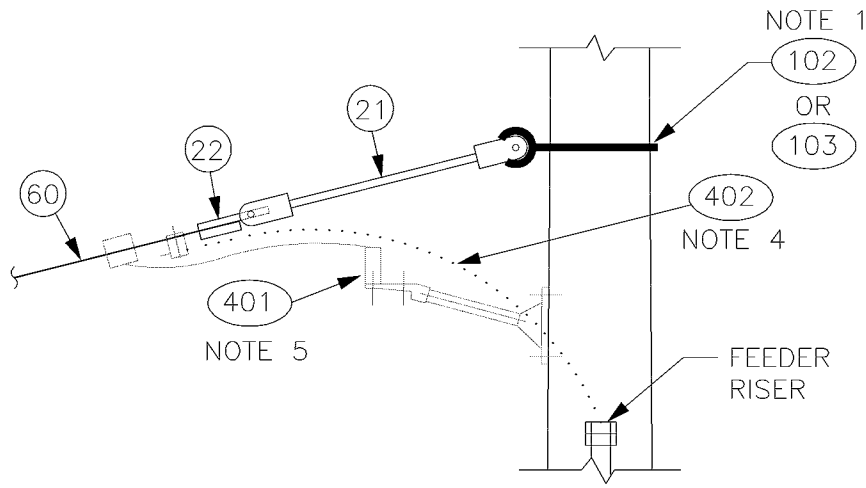

DETAIL 1

NOTES:

1. A POLE COLLAR, OR POLE EYEBOLT IS REQUIRED PER SA–102 OR SA–103 UNLESS A BUILDING EYEBOLT ATTACHMENT IS USED. INSTALLATION HEIGHT IS INDICATED ON THE OVERHEAD DRAWINGS.
2. PROVIDE TENSION ADJUSTMENT POINTS AT LOCATIONS INDICATED BY "⊠". PROVIDE WIRE ROPE CLIPS AT THESE LOCATIONS. SEE SA–166.
3. SEE SA–164 FOR HORIZONTAL & VERTICAL DIMENSIONS TO TROLLEY WIRE.
4. CONNECT FEEDER RISER TO FEED SPAN. SEE SA–402.
5. INSTALL LIGHTNING ARRESTERS PER SA–401.

DESIGNED DPG	CHKD: DOW	King County	DEPARTMENT OF TRANSPORTATION TROLLEY STANDARDS	DATE: OCT 95
DR: MM	SCALE: NONE			FILE
RECOM.	CONTRACT:		SINGLE FEEDER SPAN TWO–WAY TRAFFIC	DWG. NO. SA–322
APPROVED				SHT 1 OF 2

V:\Library & Standards\Standards\Trolley\Details\SA-320.1-325.dwg, SA-322.1, 1/5/2007 12:29:11 PM

MATERIAL LIST

ITEM #	QTY	DESCRIPTION	MANUFACTURER	CAT. NO.
01	2	DETROIT CLAMP ASSY	WABCO	19293-3007
03	1	GUY STRAIN INSUL	PORCELAIN PRODUCTS CO	504
04	3	GUY GRIP DEADEND	PREFORMED	CDE-3106
05	2	WIRE ROPE CLIP, 5/16"	CROSBY	G450
06	AS REQD	FRICTION TAPE, 3/4" (6 WRAPS)		
07	2	THIMBLE, 3/8" XHD, OPEN	CROSBY	G414
08	VARIES	GUY STRAND	COPPERWELD	8M
12	3	7/8 TRANSLITE STRAIN INSUL CL-EYE	WABCO	55339-6120
21	1	7/8 TRANSLITE STRAIN INSUL CL-CL	WABCO	54975-6360
22	2	CLAMP STRAIN EYE	WABCO	10571-2000
26	2/0	TYPE PH-4 POS FEED SPAN HANGER	WABCO	54937-3002
27	0/2	TYPE PH-5 NEG FEED SPAN HANGER	WABCO	54936-3002
41	2	H.S.P. FEEDER CLAMP ASSY, BRONZE	WABCO	19879-2000
60	AS REQD	FEED SPAN CABLE 500 KCM CU, UNSHIELDED 5 KV EPR W/ PVC JACKET		
102	VARIES	FORGED THREE-PIECE ADJUSTABLE POLE BAND, ANNEALED & GALVANIZED	KORTICK MFG CO	
103	VARIES	WOOD POLE EYEBOLT	METRO STD	SA-103
401	AS REQD	LIGHTNING ARRESTER	METRO STD	SA-401
402	AS REQD	FEEDER RISER	METRO STD	SA-402

V:\Library & Standards\Standards\Trolley\Details\SA-320.1-325.dwg, SA-322.2, 1/5/2007 12:29:16 PM

DESIGNED DPG	CHKD: DPG	King County	DEPARTMENT OF TRANSPORTATION TROLLEY STANDARDS SINGLE FEEDER SPAN TWO-WAY TRAFFIC	DATE: OCT 95
DR: DOW	SCALE: NONE			FILE
RECOM.	CONTRACT:			DWG. NO. SA-322
APPROVED				SHT 2 OF 2

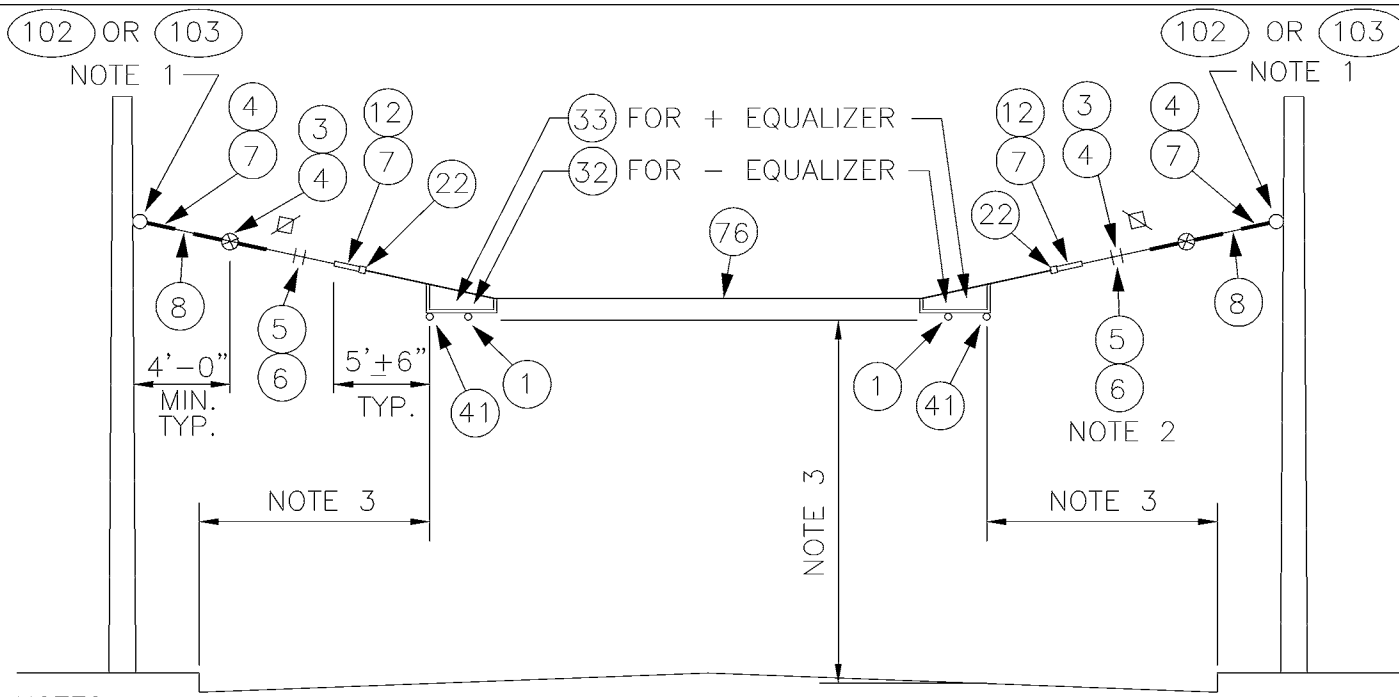

NOTES

1. A POLE COLLAR OR POLE EYEBOLT IS REQUIRED PER SA−102 OR SA−103 UNLESS A BUILDING EYEBOLT ATTACHMENT IS USED. INSTALLATION HEIGHT IS INDICATED ON THE OVERHEAD DRAWINGS.
2. PROVIDE TENSION ADJUSTMENT POINTS AT LOCATIONS INDICATED BY "⊠". PROVIDE WIRE ROPE CLIPS AT THESE LOCATIONS. SEE SA−166.
3. SEE SA−164 FOR VERTICAL & HORIZONTAL DIMENSIONS TO TROLLEY WIRE.

MATERIAL LIST

ITEM #	QTY	DESCRIPTION	MANUFACTURER	CAT. NO.
01	2	DETROIT CLAMP ASSY	WABCO	19293−3007
03	2	GUY STRAIN INSUL	PORCELAIN PRODUCTS CO	504
04	6	GUY GRIP DEADEND	PREFORMED	CDE−3106
05	4	WIRE ROPE CLIP, 5/16"	CROSBY	G450
06	AS REQD	FRICTION TAPE, 3/4" (6 WRAPS)		
07	4	THIMBLE, 3/8" XHD, OPEN	CROSBY	G414
08	VARIES	GUY STRAND	COPPERWELD	8M
12	2	7/8 TRANSLITE STRAIN INSUL CL−EYE	WABCO	55339−6120
22	2	CLAMP STRAIN EYE	WABCO	10571−2000
32	2/0	TYPE PH−4 POS FEED SPAN HANGER	WABCO	54936−3001
33	0/2	TYPE PH−5 NEG FEED SPAN HANGER	WABCO	54937−3001
41	2	HSP FEEDER CLAMP ASSY, BRONZE	WABCO	19879−2000
76	AS REQD	4/0 STRANDED INSUL CABLE		
102	VARIES	FORGED THREE−PIECE ADJUSTABLE POLE BAND, ANNEALED & GALVANIZED	KORTICK MFG CO	
103	VARIES	WOOD POLE EYEBOLT	METRO STD	SA−103

DESIGNED DPG	CHKD: DOW	King County	DEPARTMENT OF TRANSPORTATION TROLLEY STANDARDS	DATE: MAY 97
DR: TMB	SCALE: NONE			FILE
RECOM.	CONTRACT:		EQUALIZER SPAN TWO−WAY TRAFFIC	DWG. NO. SA−325
APPROVED				SHT 1 OF 1

V:\Library & Standards\Standards\Trolley\Details\SA-320.1-325.dwg, SA-325, 1/5/2007 12:29:20 PM

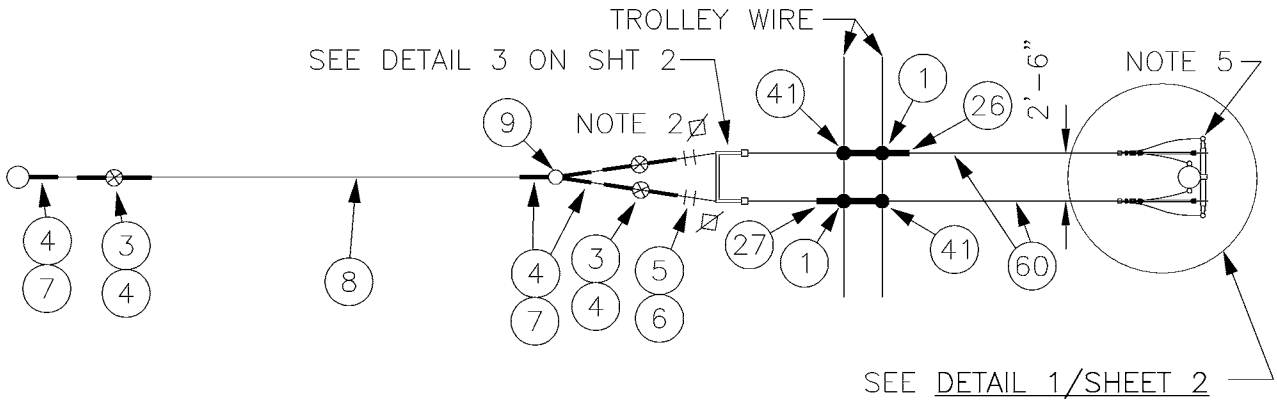

PLAN

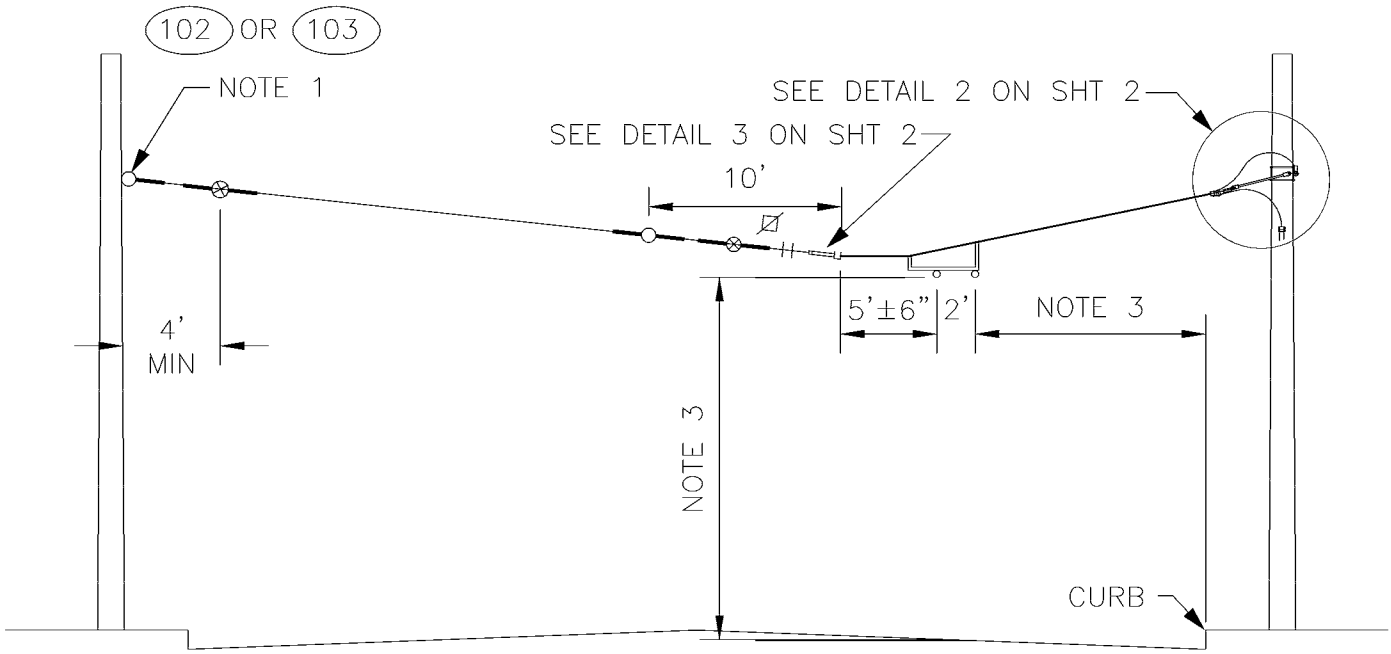

ELEVATION

NOTES:

1. A POLE COLLAR, OR POLE EYEBOLT IS REQUIRED PER SA-102 OR SA-103 UNLESS A BUILDING EYEBOLT ATTACHMENT IS USED. INSTALLATION HEIGHT IS INDICATED ON THE OVERHEAD DRAWINGS.
2. PROVIDE TENSION ADJUSTMENT POINTS AT LOCATIONS INDICATED BY "⌀". PROVIDE WIRE ROPE CLIPS AT THESE LOCATIONS. SEE SA-166.
3. SEE SA-164 FOR HORIZONTAL & VERTICAL DIMENSIONS TO TROLLEY WIRE.
4. CONNECT FEEDER RISER TO FEED SPAN. SEE SA-402.
5. INSTALL LIGHTNING ARRESTERS PER SA-401.

DESIGNED DPG	CHKD: DOW	King County	DEPARTMENT OF TRANSPORTATION TROLLEY STANDARDS	DATE: OCT 95
DR: MM	SCALE: NONE			FILE
RECOM.	CONTRACT:		DOUBLE FEEDER SPAN ONE-WAY TRAFFIC	DWG. NO. SA-331
APPROVED				SHT 1 OF 3

V:\Library & Standards\Standards\Trolley\Details\SA-331.1-3.dwg, SA-331.1, 1/5/2007 12:29:27 PM

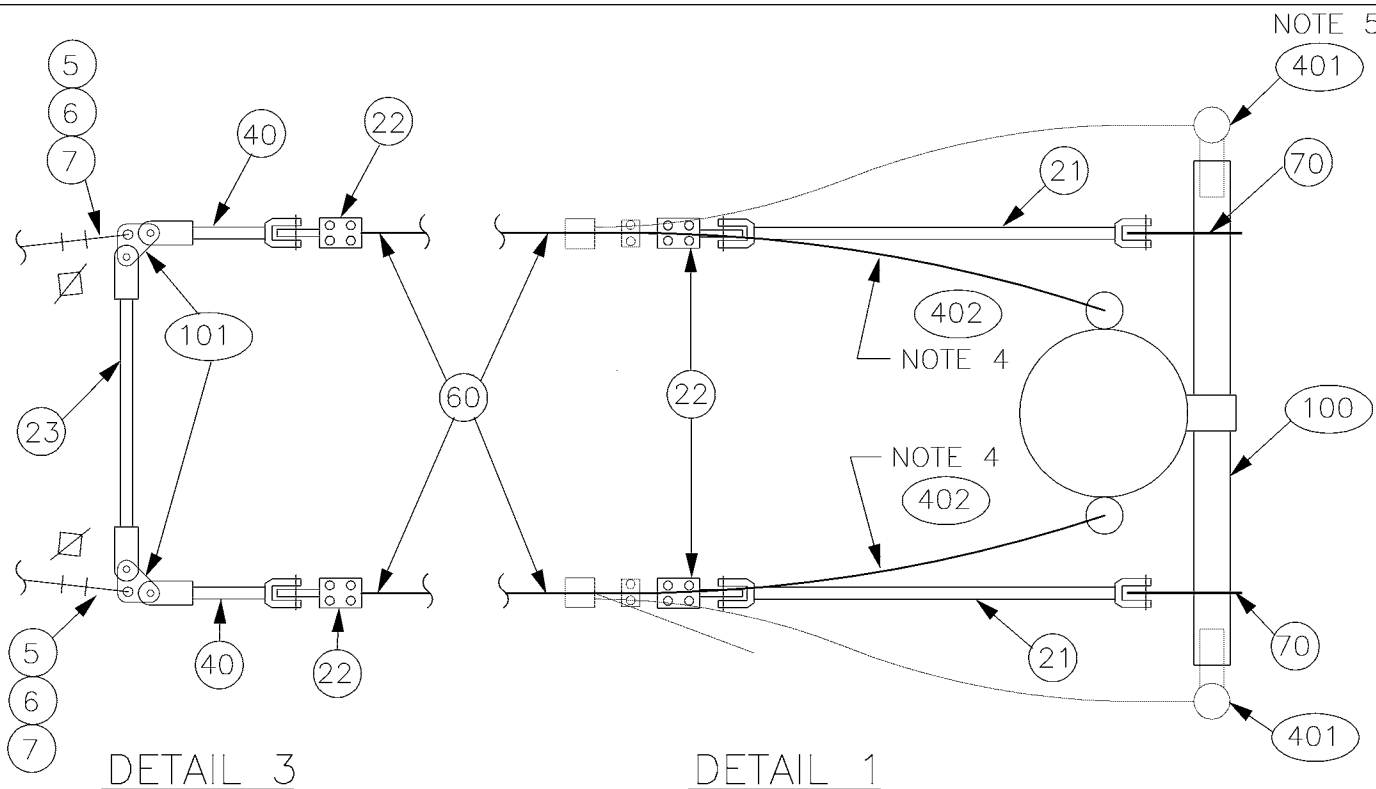

DETAIL 3

DETAIL 1

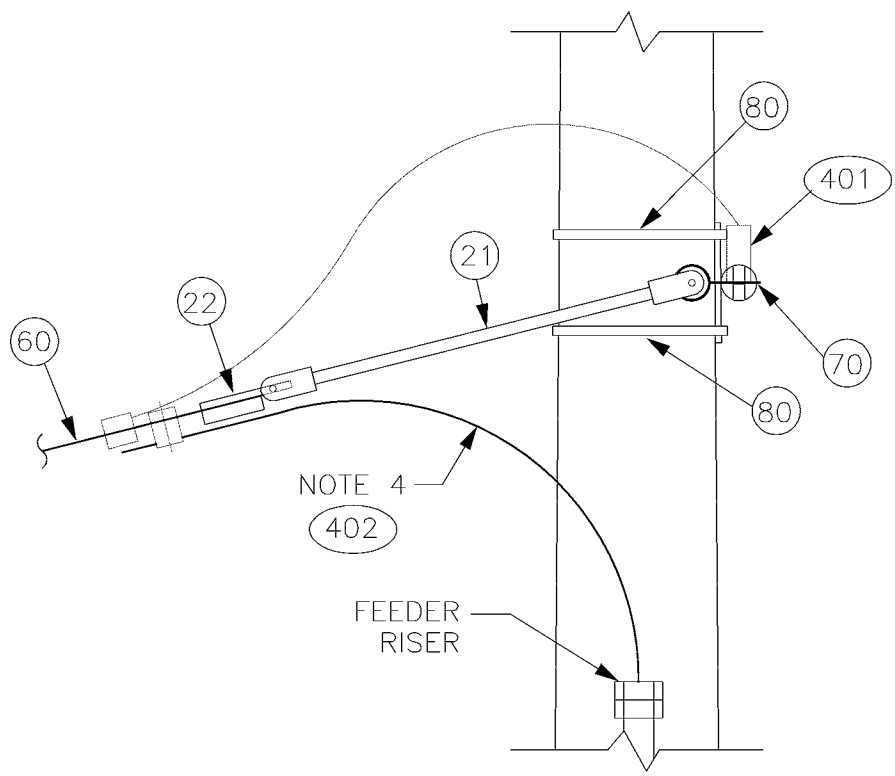

DETAIL 2

DESIGNED DPG	CHKD: DOW	King County	DEPARTMENT OF TRANSPORTATION TROLLEY STANDARDS	DATE: JUN 95
DR: MM	SCALE: NONE			FILE
RECOM.	CONTRACT:		DOUBLE FEEDER SPAN ONE-WAY TRAFFIC	DWG. NO. SA-331
APPROVED				SHT 2 OF 3

V:\Library & Standards\Standards\Trolley\Details\SA-331.1-3.dwg, SA-331.2, 1/5/2007 12:29:32 PM

MATERIAL LIST

ITEM #	QTY	DESCRIPTION	MANUFACTURER	CAT. NO.
01	2	DETROIT CLAMP ASSY	WABCO	19293-3007
03	3	GUY STRAIN INSUL	PORCELAIN PRODUCTS CO.	504
04	10	GUY GRIP DEADEND	PREFORMED	CDE-3106
05	4	WIRE ROPE CLIP, 5/16"	CROSBY	G450
06	AS REQD	FRICTION TAPE, 3/4" (6 WRAPS)		
07	6	THIMBLE, 3/8" XHD, OPEN	CROSBY	G414
08	VARIES	GUY STRAND	COPPERWELD	8M
09	1	BULL RING	WABCO	18567-2000
21	2	7/8 TRANSLITE STRAIN INSUL CL-CL	WABCO	54975-6360
22	4	CLAMP STRAIN EYE	WABCO	10571-2000
23	1	7/8 TRANSLITE STRAIN INSUL CL-CL	WABCO	54975-6260
26	1	TYPE PH-4 POS FEED SPAN HANGER	WABCO	54937-3002
27	1	TYPE PH-5 NEG FEED SPAN HANGER	WABCO	54936-3002
40	2	7/8 TRANSLITE STRAIN INSUL CL-90	WABCO	54995-6120
41	2	H.S.P. FEEDER CLAMP ASSY, BRONZE	WABCO	19879-2000
60	AS REQD	FEED SPAN CABLE 500 KCM CU, UNSHIELDED, 5KV EPR W/ PVC JACKET		
70	2	EYEBOLT, 5/8" x 6", WITH 2 NUTS & LOCKWASHER		
80	AS REQD	3/4" x 0.03" SS BANDING TYPE 201	BAND-IT	C206
100	VARIES	EPOXIROD DEADEND ARM	CHANCE	C653-1023
101	2	STRAIN PLATE	METRO STD	SA-101
102	VARIES	FORGED THREE-PIECE ADJUSTABLE POLE BAND, ANNEALED & GALVANIZED	KORTICK MFG CO	
103	VARIES	WOOD POLE EYEBOLT	METRO STD	SA-103
401	AS REQD	LIGHTNING ARRESTER	METRO STD	SA-401
402	AS REQD	FEEDER RISER	METRO STD	SA-402

DESIGNED: DPG	CHKD: DPG	King County	DEPARTMENT OF TRANSPORTATION TROLLEY STANDARDS	DATE: OCT 95
DR: DOW	SCALE: NONE		DOUBLE FEEDER SPAN ONE-WAY TRAFFIC	FILE
RECOM.	CONTRACT:			DWG. NO. SA-331
APPROVED				SHT 3 OF 3

V:\Library & Standards\Standards\Trolley\Details\SA-331.1-3.dwg, SA-331.3, 1/5/2007 12:29:36 PM

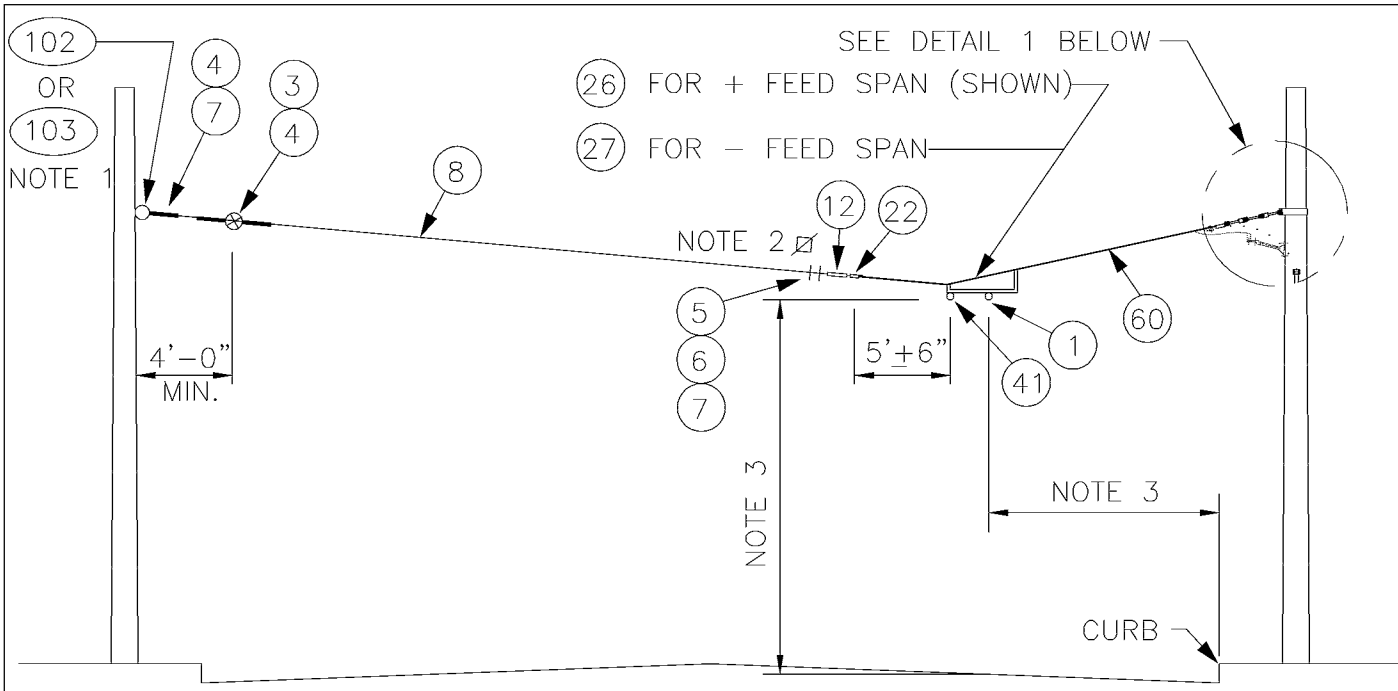

ELEVATION

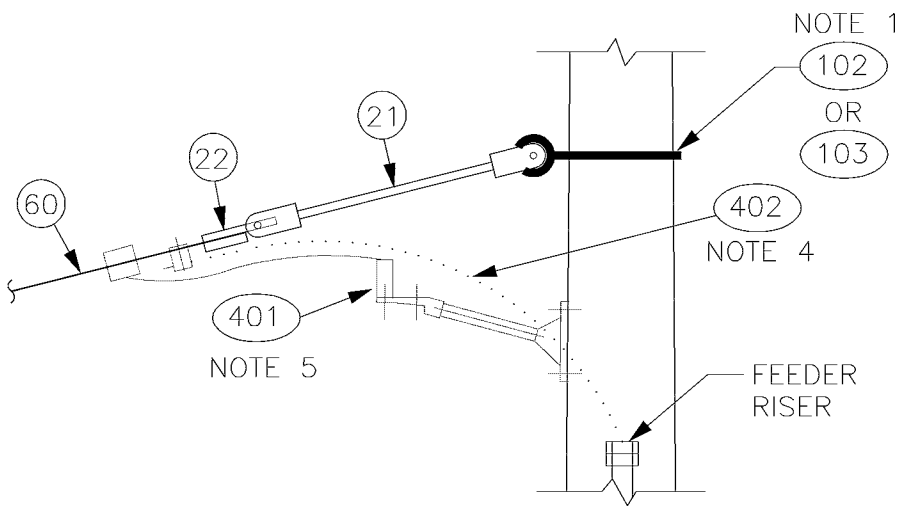

DETAIL 1

NOTES:

1. A POLE COLLAR, OR POLE EYEBOLT IS REQUIRED PER SA–102 OR SA–103 UNLESS A BUILDING EYEBOLT ATTACHMENT IS USED. INSTALLATION HEIGHT IS INDICATED ON THE OVERHEAD DRAWINGS.
2. PROVIDE TENSION ADJUSTMENT POINTS AT LOCATIONS INDICATED BY "⊠". PROVIDE WIRE ROPE CLIPS AT THESE LOCATIONS. SEE SA–166.
3. SEE SA–164 FOR HORIZONTAL & VERTICAL DIMENSIONS TO TROLLEY WIRE.
4. CONNECT FEEDER RISER TO FEED SPAN. SEE SA–402.
5. INSTALL LIGHTNING ARRESTERS PER SA–401.

DESIGNED DPG	CHKD: DOW	King County	DEPARTMENT OF TRANSPORTATION TROLLEY STANDARDS	DATE: OCT 95
DR: MM	SCALE: NONE		SINGLE FEEDER SPAN ONE–WAY TRAFFIC	FILE
RECOM.	CONTRACT:			DWG. NO. SA–332
APPROVED				SHT 1 OF 2

V:\Library & Standards\Standards\Trolley\Details\SA-332.1-2.dwg, SA-332.1, 1/5/2007 12:29:43 PM

5. INSTALL LIGHTNING ARRESTERS PER SA-401.

MATERIAL LIST

ITEM #	QTY	DESCRIPTION	MANUFACTURER	CAT. NO.
01	1	DETROIT CLAMP ASSY	WABCO	19293-3007
03	1	GUY STRAIN INSUL	PORCELAIN PRODUCTS CO.	504
04	3	GUY GRIP DEADEND	PREFORMED	CDE-3106
05	2	WIRE ROPE CLIP, 5/16"	CROSBY	G450
06	AS REQD	FRICTION TAPE, 3/4" (6 WRAPS)		
07	2	THIMBLE, 3/8" XHD, OPEN	CROSBY	G414
08	VARIES	GUY STRAND	COPPERWELD	8M
12	1	7/8 TRANSLITE STRAIN INSUL CL-EYE	WABCO	55339-6120
21	1	7/8 TRANSLITE STRAIN INSUL CL-CL	WABCO	54975-6360
22	2	CLAMP STRAIN EYE	WABCO	10571-2000
26	1/0	TYPE PH-4 POS FEED SPAN HANGER	WABCO	54937-3002
27	0/1	TYPE PH-5 NEG FEED SPAN HANGER	WABCO	54936-3002
41	1	H.S.P. FEEDER CLAMP ASSY, BRONZE	WABCO	19879-2000
60	AS REQD	FEED SPAN CABLE 500 KCM CU, UNSHIELDED, 5KV EPR W/ PVC JACKET		
102	VARIES	FORGED THREE-PIECE ADJUSTABLE POLE BAND, ANNEALED & GALVANIZED	KORTICK MFG CO	
103	VARIES	WOOD POLE EYEBOLT	METRO STD	SA-103
401	AS REQD	LIGHTNING ARRESTER	METRO STD	SA-401
402	AS REQD	FEEDER RISER	METRO STD	SA-402

V:\Library & Standards\Standards\Trolley\Details\SA-332.1-2.dwg, SA-332.2, 1/5/2007 12:29:48 PM

DESIGNED DPG	CHKD: DPG	King County	DEPARTMENT OF TRANSPORTATION TROLLEY STANDARDS	DATE: OCT 95
DR: DOW	SCALE: NONE		SINGLE FEEDER SPAN ONE-WAY TRAFFIC	FILE
RECOM.	CONTRACT:			DWG. NO. SA-332
APPROVED				SHT 2 OF 2

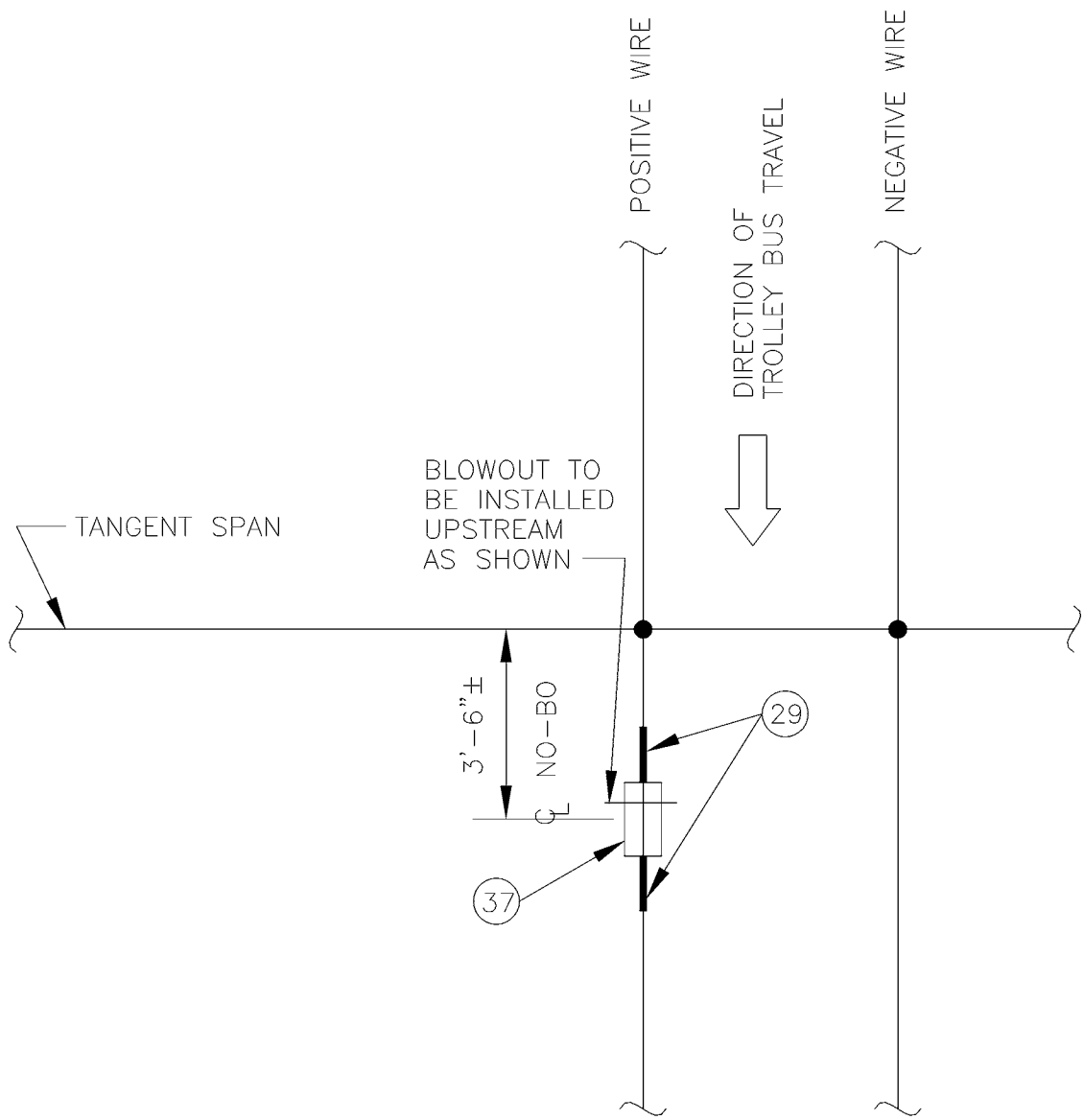

PLAN

MATERIAL LIST

ITEM #	QTY	DESCRIPTION	MANUFACTURER	CAT. NO.
29	2	TYPE TCL CLEVIS TIP 4/0	WABCO	54950-3002
37	1	NO-BO SECTION INSUL	WABCO	55025-3001

DESIGNED DPG	CHKD: DOW	King County	DEPARTMENT OF TRANSPORTATION TROLLEY STANDARDS	DATE: JUN 93
DR: TMB	SCALE: NONE		SECTIONALIZING SPAN ONE-WAY TRAFFIC	FILE
RECOM.	CONTRACT:			DWG. NO. SA-333
APPROVED				SHT 1 OF 1

V:\Library & Standards\Standards\Trolley\Details\SA-333.dwg, SA-333, 1/5/2007 12:29:54 PM

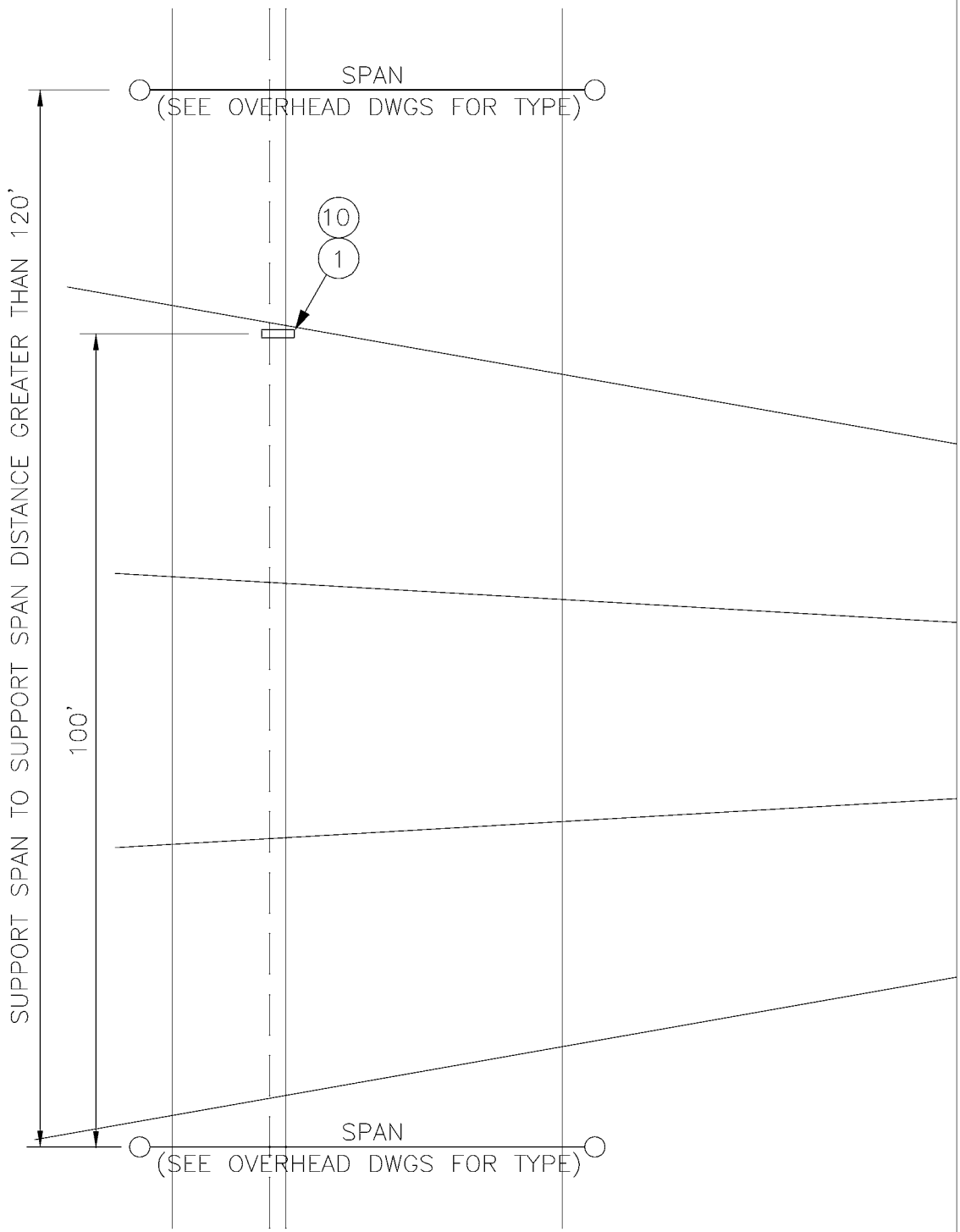

MATERIAL LIST

ITEM #	QTY	DESCRIPTION	MANUFACTURER	CAT. NO.
01	2	DETROIT CLAMP ASSY	WABCO	19293-3007
10	1	HI-LITE DOUBLE CURVE HANGER	WABCO	54962-3001

DESIGNED: DPG	CHKD: DPG	King County	DEPARTMENT OF TRANSPORTATION TROLLEY STANDARDS	DATE: OCT 95
DR: DOW	SCALE: NONE		TROLLEY WIRE SPREADER BAR	FILE
RECOM.	CONTRACT:			DWG. NO. SA-334
APPROVED				SHT 1 OF 1

V:\Library & Standards\Standards\Trolley\Details\SA-334.dwg, SA-334, 1/5/2007 12:30:01 PM

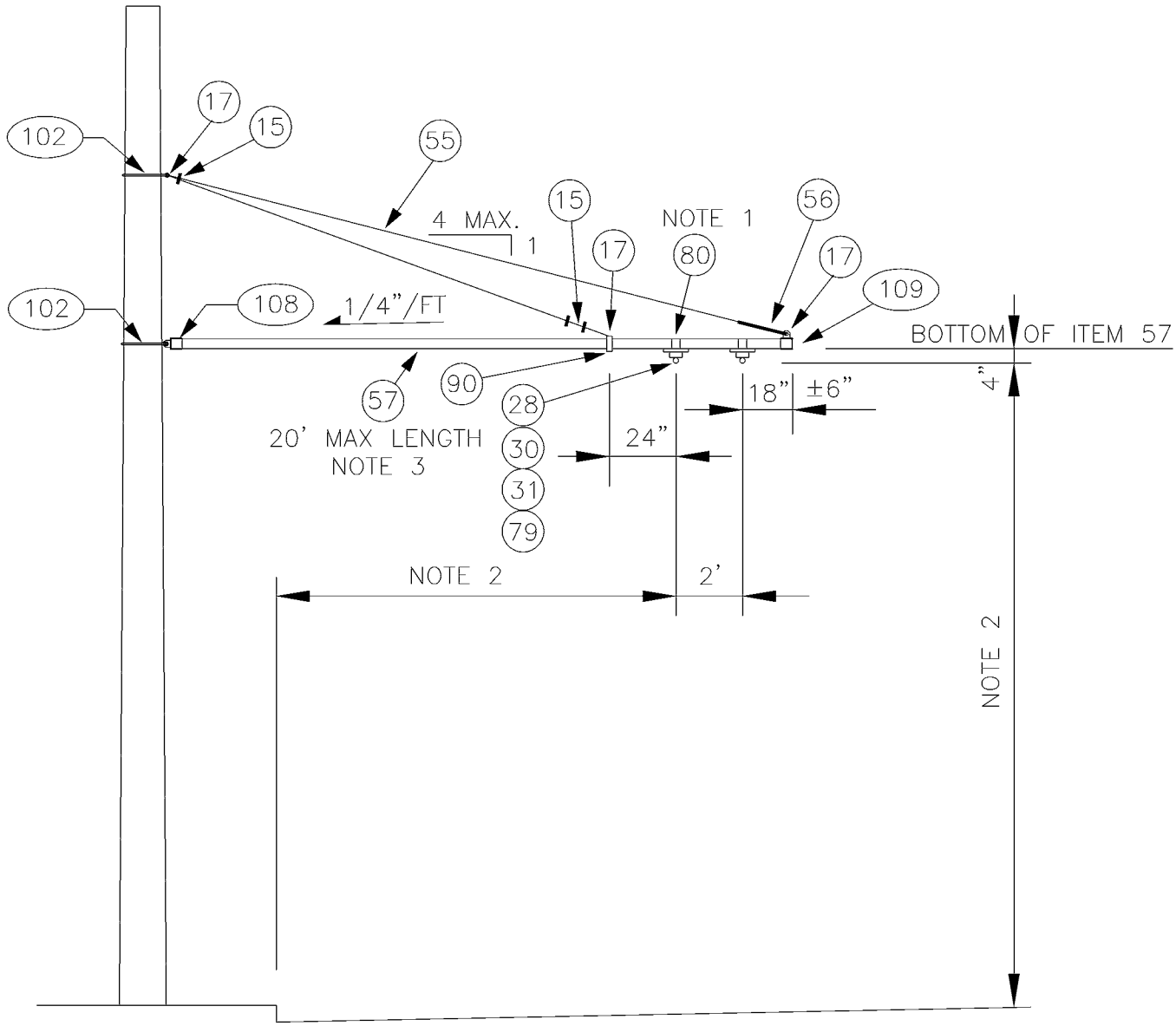

NOTES:

1. STAINLESS STEEL BANDING SHALL BE WRAPPED DOUBLE THICKNESS AROUND ITEM 57 PRIOR TO CLAMPING.
2. SEE SA–164 FOR HORIZONTAL & VERTICAL DIMENSIONS TO TROLLEY WIRE.
3. DRILL 1/2" HOLE IN TUBE TO MATCH HOLE IN ITEMS 108 & 109 FOR INSERTION OF 3/8" SS BOLT.

DESIGNED DPG	CHKD: DOW	King County	DEPARTMENT OF TRANSPORTATION TROLLEY STANDARDS	DATE: MAY 98
DR: MM	SCALE: NONE			FILE
RECOM.	CONTRACT:		STEEL POLE BRACKET ASSEMBLY TANGENT CONSTRUCTION	DWG. NO. SA–341
APPROVED				SHT 1 OF 2

V:\Library & Standards\Standards\Trolley\Details\SA-341.1-2.dwg, SA-341.1, 1/5/2007 12:30:08 PM

MATERIAL LIST

ITEM #	QTY	DESCRIPTION	MANUFACTURER	CAT. NO.
15	3	WIRE ROPE CLIP, 3/8"	CROSBY	G450
17	3	THIMBLE, 1/2" XHD, OPEN	CROSBY	G414
28	2	INSULATOR SPOOL	WABCO	16835-2000
30	2	TROLLEY SUPPORT-LARGE PIPE ARMS	WABCO	54940-4001
31	2	SPRING DETROIT CLAMP	WABCO	54959-3001
55	VARIES	PHILLYSTRAN (3/8")	PHILLYSTRAN INC.	HPTG 6700I
56	1	PHILLYSTRAN BIG GRIP	PHILLYSTRAN INC.	PLP 2755
57	VARIES	FIBERGLASS REINFORCED PLASTIC (FRP) TUBE 3 1/2" Ø X 1/2"	MORRISON MOLDED FG	EXTREN SERIES 525
79	2	5/8"-11 UNC X 1 3/8" STUD		
80	VARIES	3/4" STAINLESS STEEL BANDING	BAND-IT	TYPE 201
90	1	HEAVY PIPE CLAMP, GALV, 3" IPS	GRINNELL	FIG. 216
102	2	FORGED THREE-PIECE ADJUSTABLE POLE BAND, ANNEALED & GALVANIZED	KORTICK MFG CO	
108	1	MAST ARM POLE END CAP	METRO STD	SA-108
109	1	MAST ARM ARM END CAP	METRO STD	SA-109

DESIGNED DPG	CHKD: DPG	King County	DEPARTMENT OF TRANSPORTATION TROLLEY STANDARDS	DATE: MAR 97
DR: DOW	SCALE: NONE		STEEL POLE BRACKET ASSEMBLY TANGENT CONSTRUCTION	FILE
RECOM.	CONTRACT:			DWG. NO. SA-341
APPROVED				SHT 2 OF 2

V:\Library & Standards\Standards\Trolley\Details\SA-341.1-2.dwg, SA-341.2, 1/5/2007 12:30:13 PM

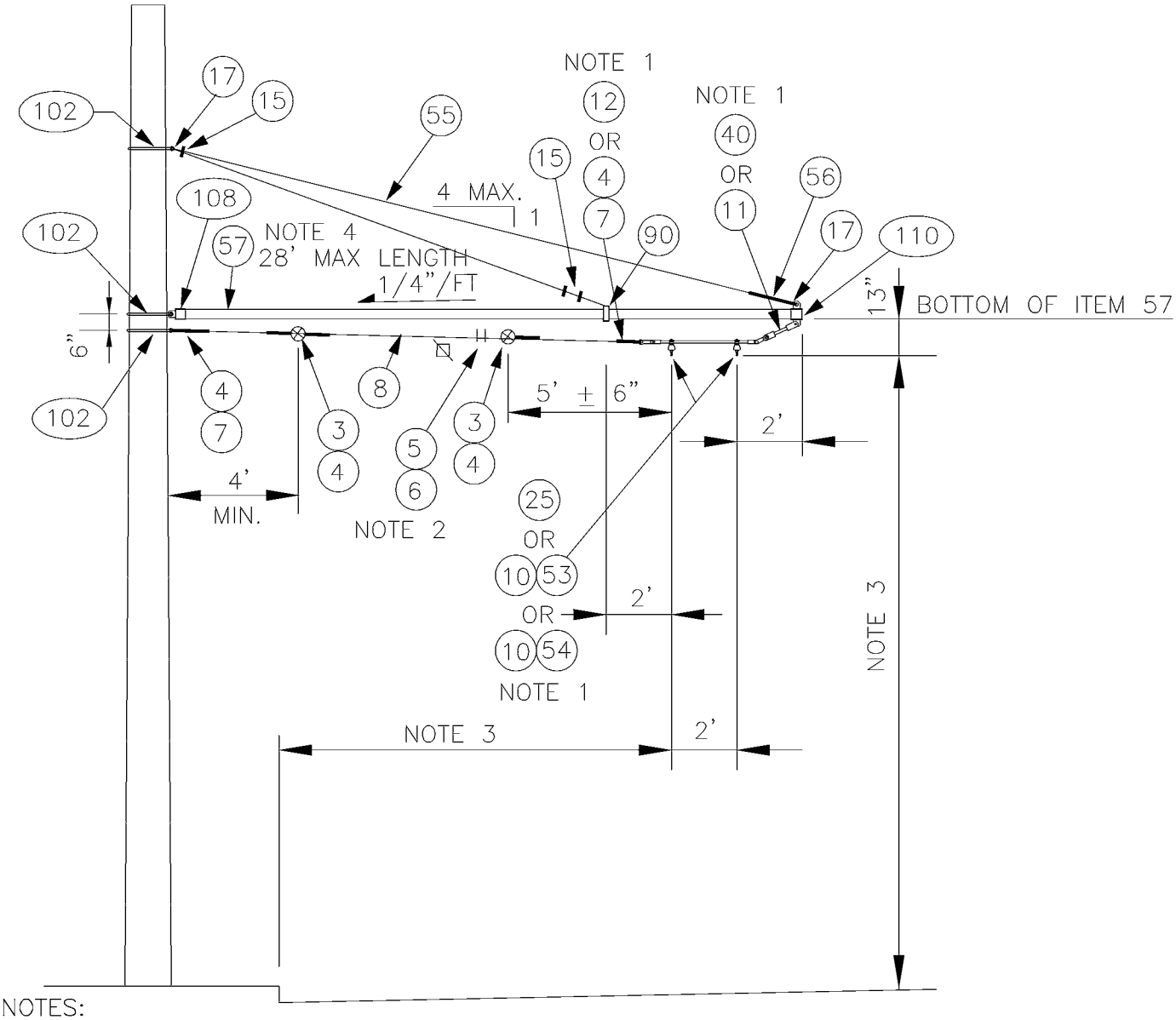

NOTES:

1. USE ITEMS 4,7,10,11 & 53 WHEN ANGLE VARIES FROM 1° TO 5°. USE ITEMS 4,7, 10,11 & 54 WHEN ANGLE VARIES FROM 5° TO 7.5°. USE ITEMS 12, 25, & 40 WHEN ANGLE IS GREATER THAN 8°. SEGMENTS SHALL NOT BE USED FOR ANGLES GREATER THAN 12° WHEN POLE IS ON INSIDE OF CURVE.
2. PROVIDE TENSION ADJUSTMENT POINTS AT LOCATIONS INDICATED BY "⊡". PROVIDE WIRE ROPE CLIPS AT THESE LOCATIONS. SEE SA-166.
3. SEE SA-164 FOR HORIZONTAL & VERTICAL DIMENSIONS TO TROLLEY WIRE.
4. DRILL 1/2" HOLE IN TUBE TO MATCH HOLE IN ITEMS 108 & 110 FOR INSERTION OF 3/8" SS BOLT.
5. LEVEL CURVE HANGER (ITEM 10) BY ADJUSTING HANGER ARMS.

DESIGNED DPG	CHKD: DOW	King County	DEPARTMENT OF TRANSPORTATION TROLLEY STANDARDS	DATE: MARCH 00
DR: MM	SCALE: NONE			FILE
RECOM.	CONTRACT:		STEEL POLE BRACKET ASSEMBLY CURVE CONSTRUCTION	DWG. NO. SA-342
APPROVED				SHT 1 OF 2

V:\Library & Standards\Standards\Trolley\Details\SA-342.1-2.dwg, SA-342.1, 1/5/2007 12:30:21 PM

MATERIAL LIST

ITEM #	QTY	DESCRIPTION	MANUFACTURER	CAT. NO.
03	2	GUY STRAIN INSUL	PORCELAIN PRODUCTS CO.	504
04	VARIES	GUY GRIP DEADEND	PREFORMED	CDE-3106
05	2	WIRE ROPE CLIP, 5/16"	CROSBY	G450
06	AS REQD	FRICTION TAPE, 3/4" (6 WRAPS)		
07	VARIES	THIMBLE, 3/8" XHD, OPEN	CROSBY	G414
08	VARIES	GUY STRAND	COPPERWELD	8M
10	VARIES	HI-LITE DOUBLE CURVE HANGER	WABCO	54962-3001
11	VARIES	7/8 TRANSLITE STRAIN INSUL CL-CL	WABCO	54975-6120
12	VARIES	7/8 TRANSLITE STRAIN INSUL CL-EYE	WABCO	55339-6120
15	3	WIRE ROPE CLIP, 3/8"	CROSBY	G450
17	2	THIMBLE, 1/2" XHD, OPEN	CROSBY	G414
25	VARIES SEE PLAN	CURVE SEGMENT 8-12 DEG TYPE C CURVE SEGMENT 13-27 DEG TYPE C CURVE SEGMENT 28-47 DEG TYPE C	WABCO WABCO WABCO	22301-3014 22302-3005 22303-3005
40	VARIES	7/8 TRANSLITE STRAIN INSUL CL-90	WABCO	54995-6120
53	VARIES	CURVE RAIL (1° TO 5° 2 FT LG)	K & M	851 B412/0
54	VARIES	CURVE RAIL (5.5° TO 7.5° 4 FT LG)	K & M	851 B412/1
55	VARIES	PHILLYSTRAN (3/8")	PHILLYSTRAN INC.	HPTG 6700I
56	1	PHILLYSTRAN BIG GRIP	PHILLYSTRAN INC.	PLP 2755
57	VARIES	FIBERGLASS REINFORCED PLASTIC (FRP) TUBE 5" ø X 1/4"	STRONGWELL	EXTREN SERIES 525
90	1	HEAVY PIPE CLAMP, GALV	GRINNELL	FIG. 216
102	3	FORGED THREE-PIECE ADJUSTABLE POLE BAND, ANNEALED & GALVANIZED	KORTICK MFG CO	
108	1	MAST ARM POLE END CAP	METRO STD	SA-108
110	1	MAST ARM UNDERSLING END CAP	METRO STD	SA-110

DESIGNED DPG	CHKD: DPG	King County	DEPARTMENT OF TRANSPORTATION TROLLEY STANDARDS	DATE: MARCH 00
DR: DOW	SCALE: NONE			FILE
RECOM.	CONTRACT:		STEEL POLE BRACKET ASSEMBLY CURVE CONSTRUCTION	DWG. NO. SA-342
APPROVED				SHT 2 OF 2

V:\Library & Standards\Standards\Trolley\Details\SA-342.1-2.dwg, SA-342.2, 1/5/2007 12:30:26 PM

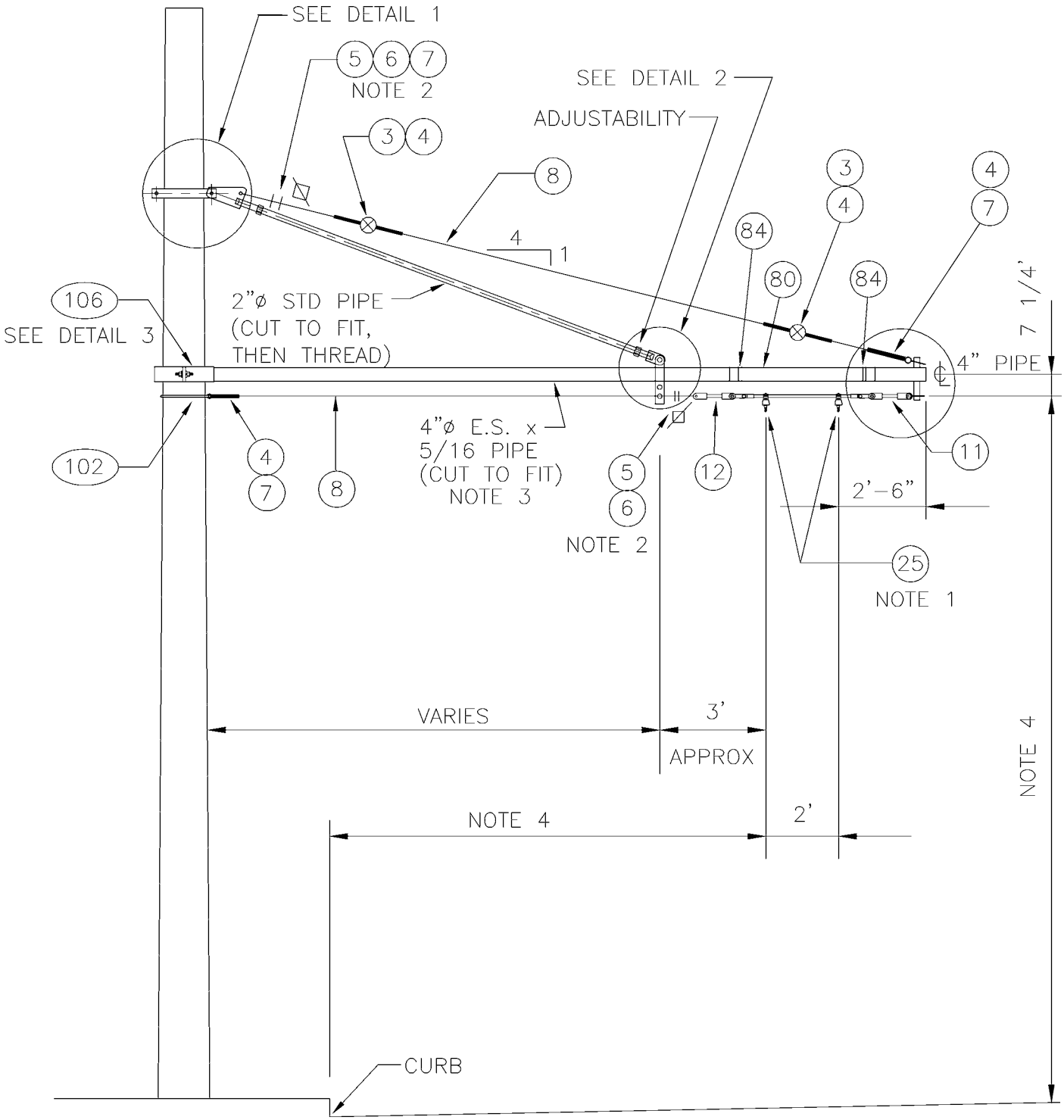

DESIGNED DPG	CHKD: DOW	King County	DEPARTMENT OF TRANSPORTATION TROLLEY STANDARDS	DATE: OCT 95
DR: CMS	SCALE: NONE			FILE
RECOM.	CONTRACT:		STEEL POLE BRACKET ASSEMBLY COMPRESSION TYPE	DWG. NO. SA-343
APPROVED				SHT 1 OF 4

V:\Library & Standards\Standards\Trolley\Details\SA-343.1-4.dwg, SA-343.1, 1/5/2007 12:30:33 PM

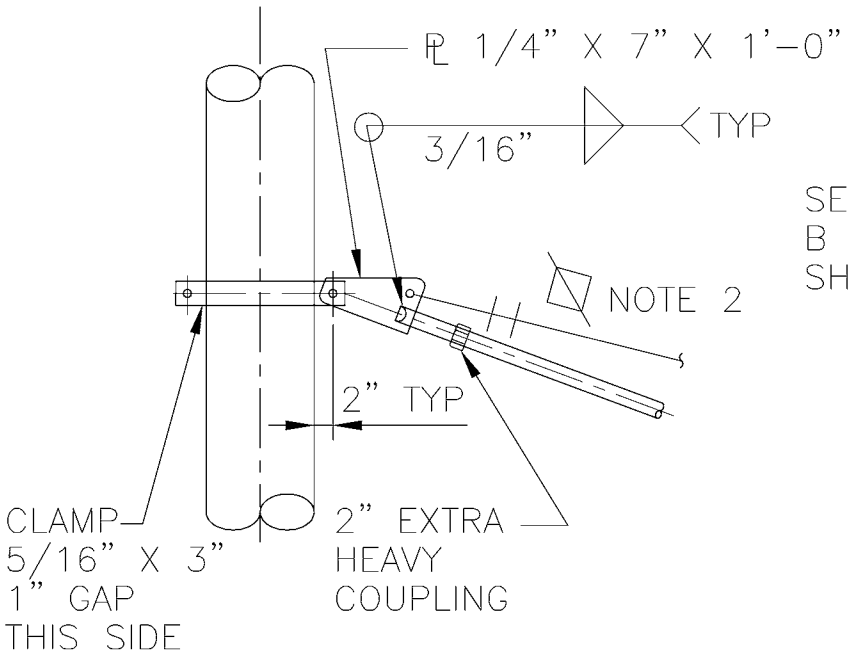

DETAIL 1

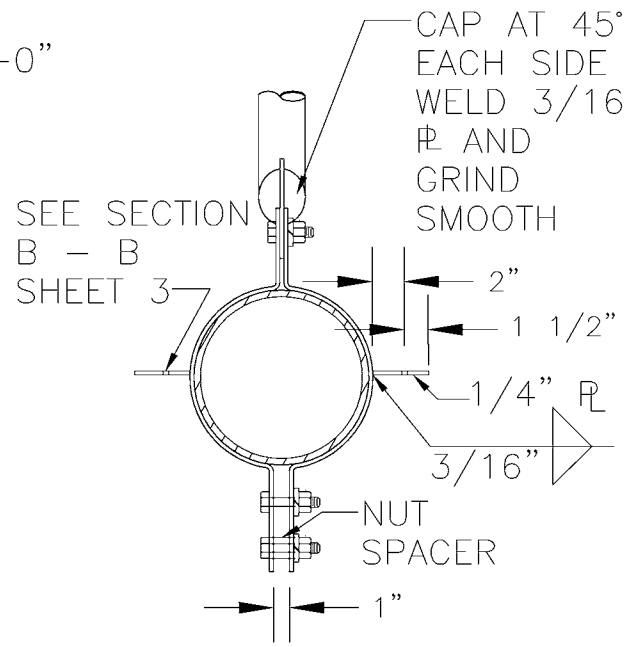

SECTION A-A

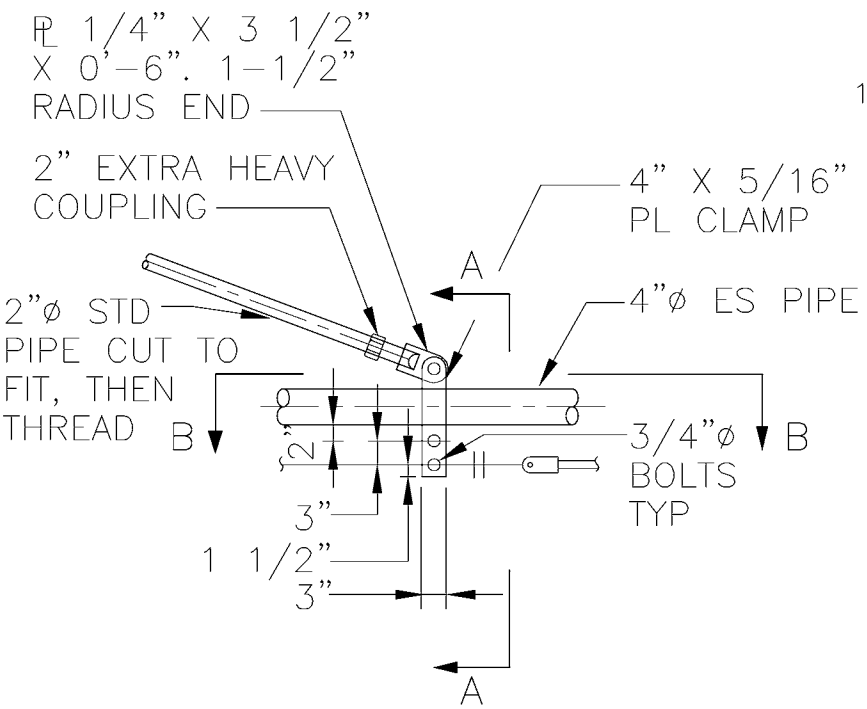

DETAIL 2

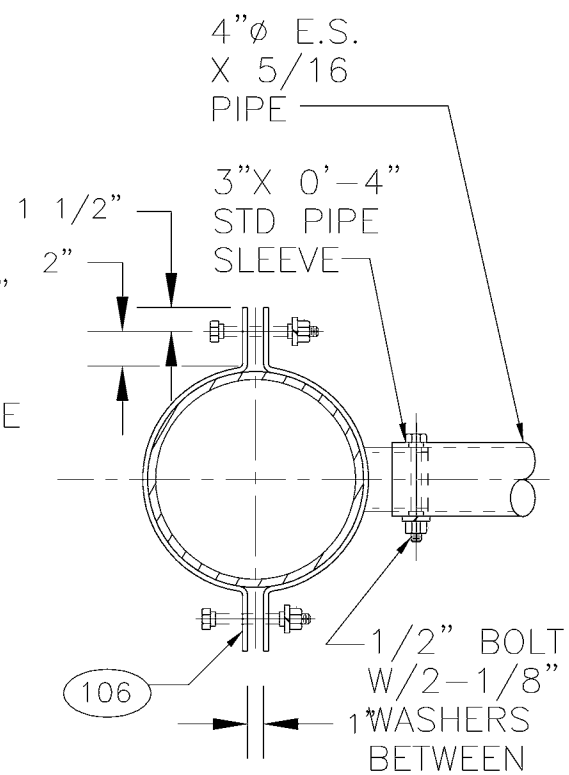

DETAIL 3

DESIGNED DJG	CHKD: DOW	King County	DEPARTMENT OF TRANSPORTATION TROLLEY STANDARDS	DATE: OCT 95
DR: CMS	SCALE: NONE			FILE
RECOM.	CONTRACT:		STEEL POLE BRACKET ASSEMBLY COMPRESSION TYPE	DWG. NO. SA-343
APPROVED				SHT 2 OF 4

V:\Library & Standards\Standards\Trolley\Details\SA-343.1-4.dwg, SA-343.2, 1/5/2007 12:30:37 PM

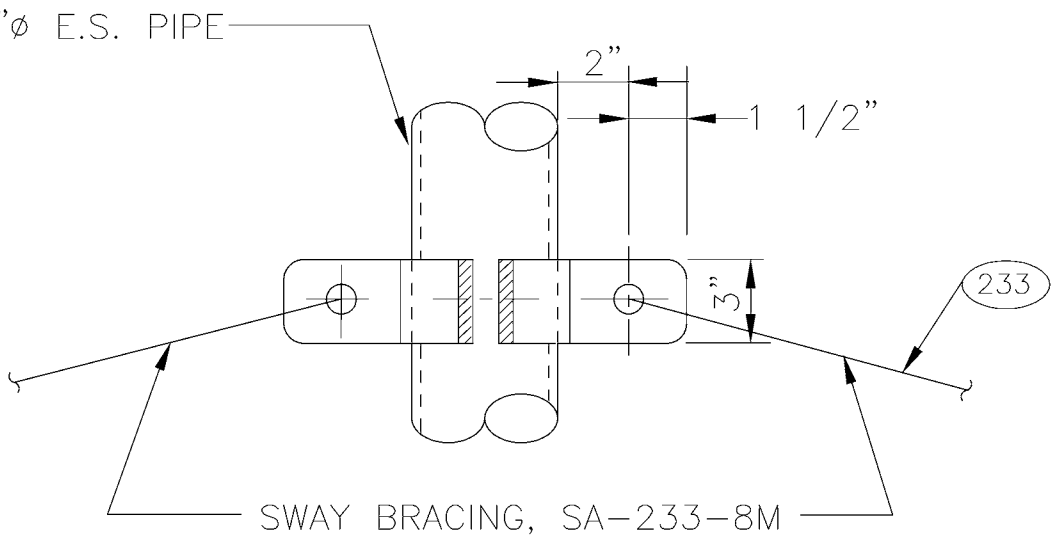

SECTION B-B

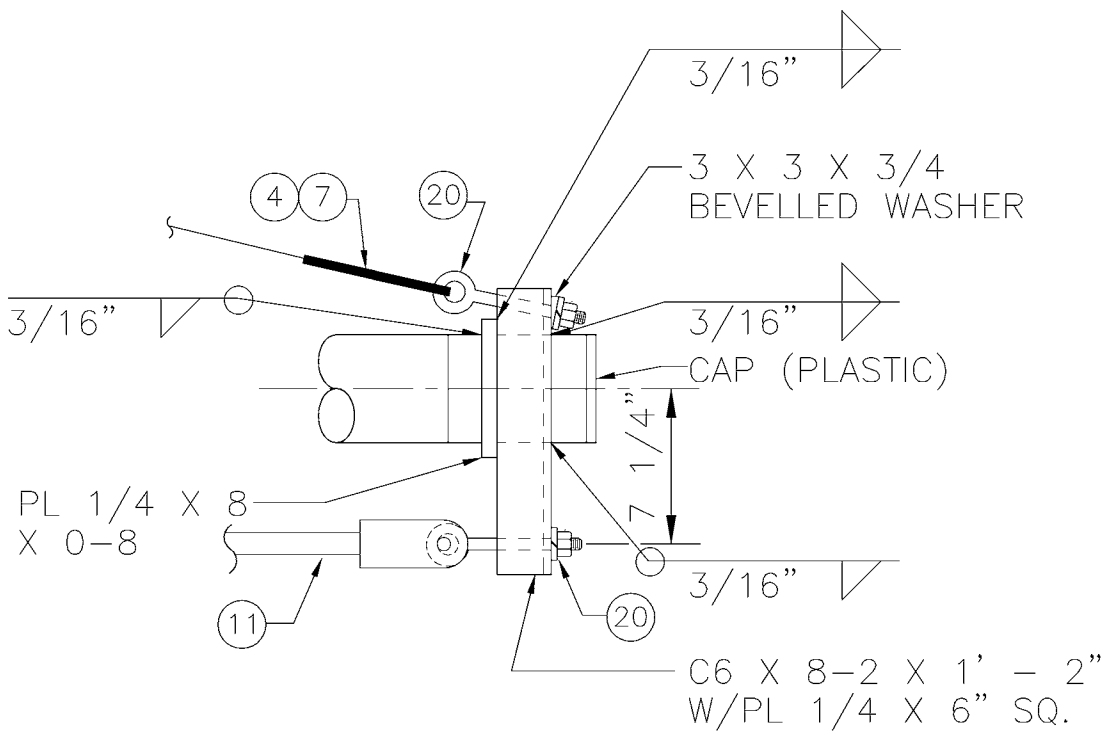

DETAIL 4

DESIGNED DPG	CHKD: DOW	King County	DEPARTMENT OF TRANSPORTATION TROLLEY STANDARDS	DATE: OCT 95
DR: CMS	SCALE: NONE			FILE
RECOM.	CONTRACT:		STEEL POLE BRACKET ASSEMBLY COMPRESSION TYPE	DWG. NO. SA-343
APPROVED				SHT 3 OF 4

V:\Library & Standards\Standards\Trolley\Details\SA-343.1-4.dwg, SA-343.3, 1/5/2007 12:30:42 PM

MATERIAL LIST

ITEM #	QTY	DESCRIPTION	MANUFACTURER	CAT. NO.
03	2	GUY STRAIN INSUL	PORCELAIN PRODUCTS CO.	504
04	6	GUY GRIP DEADEND	PREFORMED	CDE-3106
05	4	WIRE ROPE CLIP, 5/16"	CROSBY	G450
06	AS REQD	FRICTION TAPE, 3/4" (6 WRAPS)		
07	3	THIMBLE, 3/8" XHD, OPEN	CROSBY	G414
08	VARIES	GUY STRAND	COPPERWELD	8M
11	1	7/8 TRANSLITE STRAIN INSUL CL-CL	WABCO	54975-6120
12	1	7/8 TRANSLITE STRAIN INSUL CL-EYE	WABCO	55339-6120
20	2	EYEBOLT	WABCO	11933-2000
80	VARIES	3/4" STAINLESS STEEL BANDING	BAND-IT	TYPE 201
84	4 LF	SCHED 40 PVC, GREY, SPLIT		
102	VARIES	FORGED THREE-PIECE ADJUSTABLE POLE BAND, ANNEALED & GALVANIZED	KORTICK MFG CO	
106	1	COMPRESSION POLE BRACKET COLLAR	METRO STD	SA-106
233	2	SWAY BRACING, SA-233-8M	METRO STD	SA-233

NOTES:

1. OVERHEAD DRAWINGS TO INDICATE CURVE SEGMENT TO BE INSTALLED. MAXIMUM ANGLE OF CURVE SEGMENT IS 35 DEGREES. MAXIMUM CHANGE IN STREET GRADIENT IS ±5%

2. PROVIDE TENSION ADJUSTMENT POINT AT LOCATION INDICATED BY "⊠". PROVIDE WIRE ROPE CLIPS AT THIS LOCATION. SEE SA-166.

3. THE PIPE BRACKET SHALL BE 4" DIAMETER EXTRA STRONG ASTM A53, GRADE B GALVANIZED STEEL PIPE.

   MAXIMUM PIPE LENGTH IS 18 FT.

4. SEE SA-164 FOR HORIZONTAL AND VERTICAL DIMENSIONS TO THE TROLLEY WIRE.

V:\Library & Standards\Standards\Trolley\Details\SA-343.1-4.dwg, SA-343.4, 1/5/2007 12:30:47 PM

DESIGNED: DPG	CHKD: DPG	King County	DEPARTMENT OF TRANSPORTATION TROLLEY STANDARDS	DATE: OCT 95
DRN: DOW	SCALE: NONE		STEEL POLE BRACKET ASSEMBLY COMPRESSION TYPE	FILE
RECOM.	CONTRACT:			DWG. NO. SA-343
APPROVED				SHT 4 OF 4

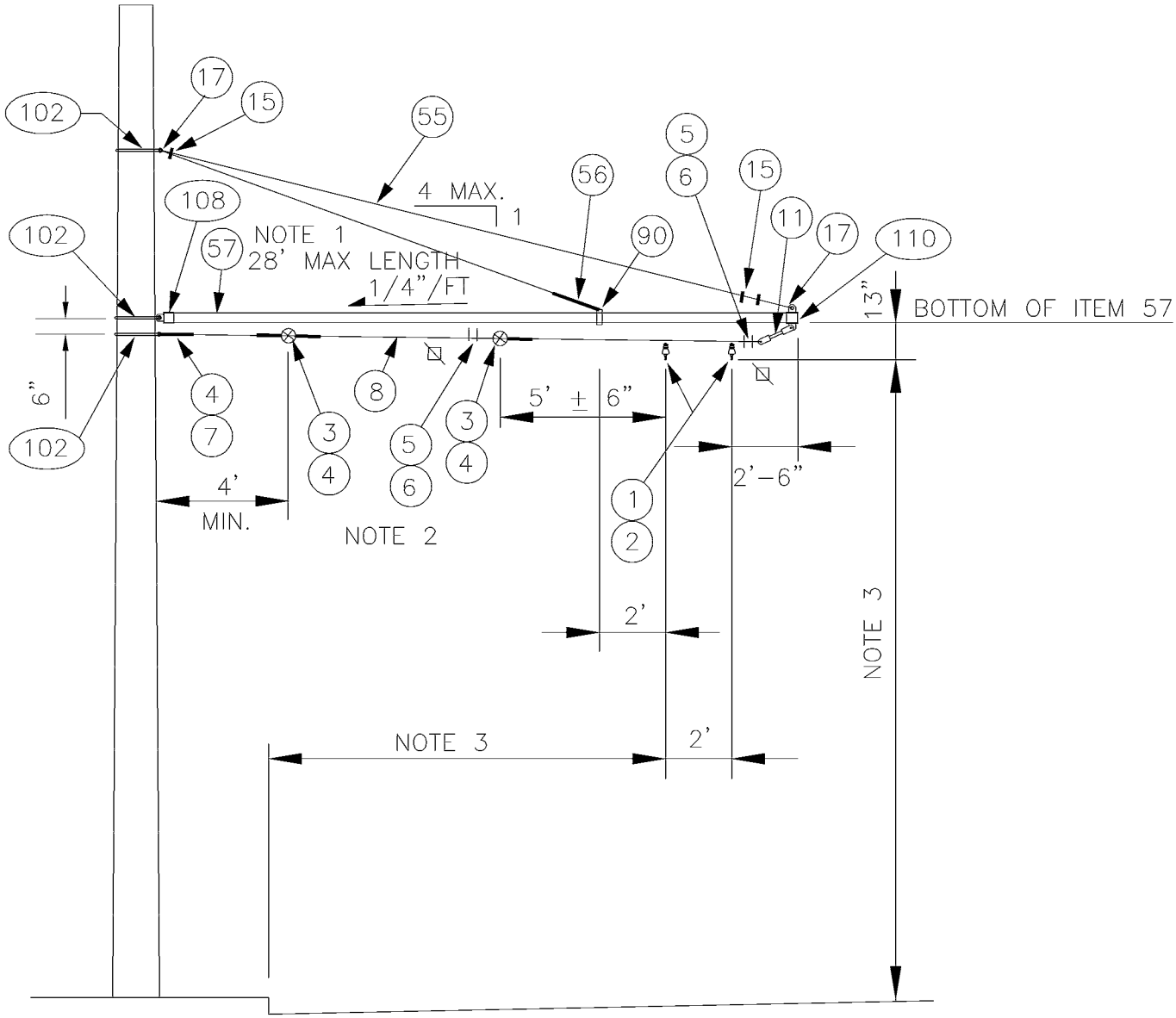

NOTES:

1. DRILL 1/2" HOLE IN TUBE TO MATCH HOLE IN ITEMS 108 & 110 FOR INSERTION OF 3/8" SS BOLT.
2. PROVIDE TENSION ADJUSTMENT POINTS AT LOCATIONS INDICATED BY "⊠". PROVIDE WIRE ROPE CLIPS AT THESE LOCATIONS. SEE SA-166.
3. SEE SA-164 FOR HORIZONTAL & VERTICAL DIMENSIONS TO TROLLEY WIRE.
4. HANG CLAMP (ITEM 1) VERTICAL BY ADJUSTING SPAN HANGER (ITEM 2).

DESIGNED DPG	CHKD: AJW	King County	DEPARTMENT OF TRANSPORTATION TROLLEY STANDARDS	DATE: MARCH 00
DR: AJW	SCALE: NONE			FILE
RECOM.	CONTRACT:		STEEL POLE BRACKET ASSEMBLY UNDERSLING CONSTRUCTION	DWG. NO. SA-345
APPROVED				SHT 1 OF 2

V:\Library & Standards\Standards\Trolley\Details\SA-345.1-2.dwg, SA-345.1, 1/5/2007 12:30:54 PM

MATERIAL LIST

ITEM #	QTY	DESCRIPTION	MANUFACTURER	CAT. NO.
01	2	DETROIT CLAMP ASSY	WABCO	19293-3007
02	2	AGC TANGENT SPAN HANGER	WABCO	19360-2000
03	2	GUY STRAIN INSUL	PORCELAIN PRODUCTS CO.	504
04	4	GUY GRIP DEADEND	PREFORMED	CDE-3106
05	4	WIRE ROPE CLIP, 5/16"	CROSBY	G450
06	AS REQD	FRICTION TAPE, 3/4" (6 WRAPS)		
07	1	THIMBLE, 3/8" XHD, OPEN	CROSBY	G414
08	VARIES	GUY STRAND	COPPERWELD	8M
11	1	7/8 TRANSLITE STRAIN INSUL CL-CL	WABCO	54975-6120
15	3	WIRE ROPE CLIP, 3/8"	CROSBY	G450
17	2	THIMBLE, 1/2" XHD, OPEN	CROSBY	G414
55	VARIES	PHILLYSTRAN (3/8")	PHILLYSTRAN INC.	HPTG 6700I
56	1	PHILLYSTRAN BIG GRIP	PHILLYSTRAN INC.	PLP 2755
57	VARIES	FIBERGLASS REINFORCED PLASTIC (FRP) TUBE 5" Ø X 1/4"	STRONGWELL	EXTREN SERIES 525
90	1	HEAVY PIPE CLAMP, GALV	GRINNELL	FIG. 216
102	3	FORGED THREE-PIECE ADJUSTABLE POLE BAND, ANNEALED & GALVANIZED	KORTICK MFG CO	
108	1	MAST ARM POLE END CAP	METRO STD	SA-108
110	1	MAST ARM UNDERSLING END CAP	METRO STD	SA-110

DESIGNED DPG	CHKD: AJW	King County	DEPARTMENT OF TRANSPORTATION TROLLEY STANDARDS	DATE: MARCH 00
DR: AJW	SCALE: NONE			FILE
RECOM.	CONTRACT:		STEEL POLE BRACKET ASSEMBLY UNDERSLING CONSTRUCTION	DWG. NO. SA-345
APPROVED				SHT 2 OF 2

V:\Library & Standards\Standards\Trolley\Details\SA-345.1-2.dwg, SA-345.2, 1/5/2007 12:31:00 PM

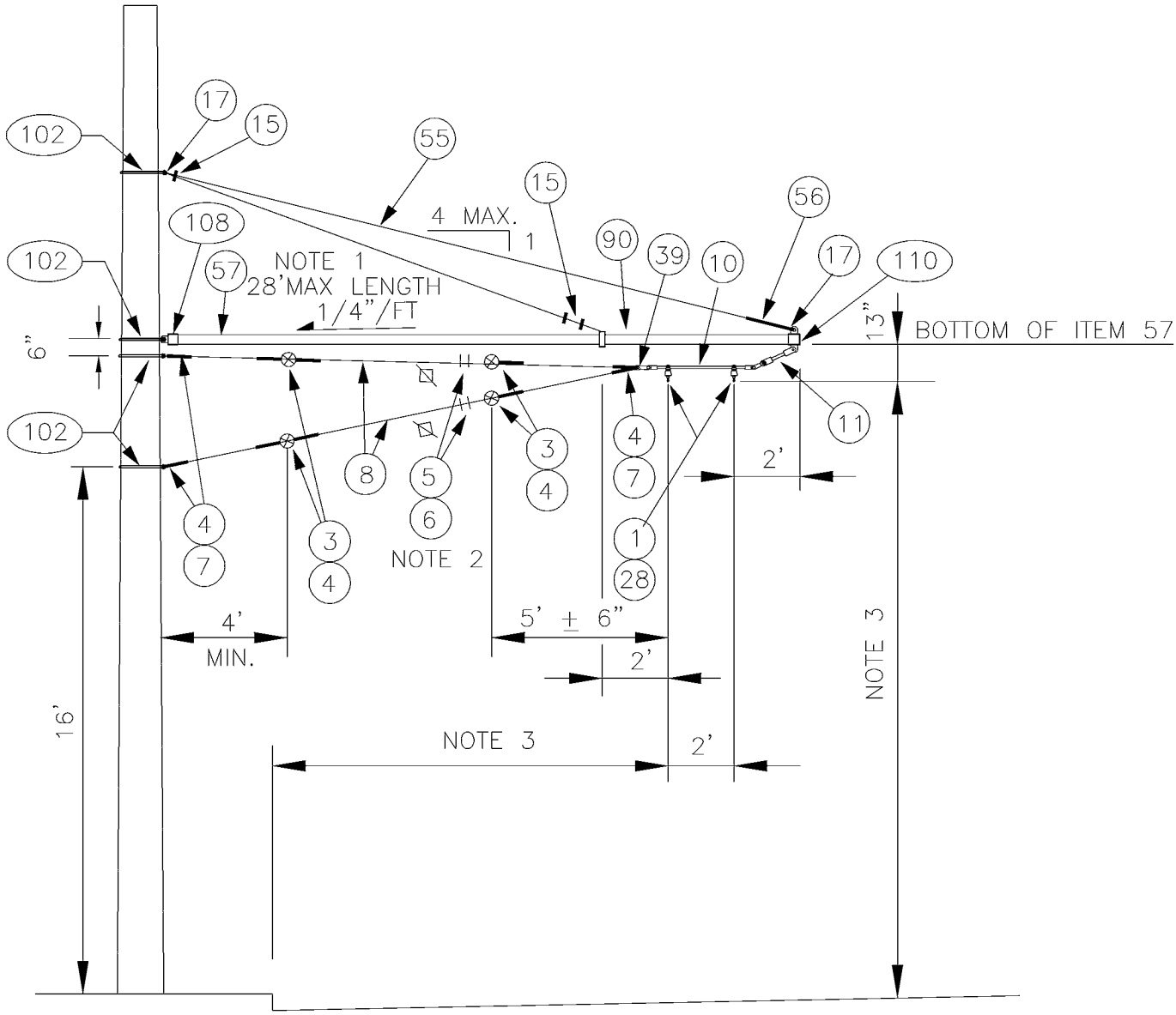

NOTES:

1. DRILL 1/2" HOLE IN TUBE TO MATCH HOLE IN ITEMS 108 & 110 FOR INSERTION OF 3/8" SS BOLT.
2. PROVIDE TENSION ADJUSTMENT POINTS AT LOCATIONS INDICATED BY "⊠". PROVIDE WIRE ROPE CLIPS AT THESE LOCATIONS. SEE SA-166.
3. SEE SA-164 FOR HORIZONTAL & VERTICAL DIMENSIONS TO TROLLEY WIRE.
4. LEVEL CURVE HANGER(ITEM 10) BY ADJUSTING HANGER ARMS.

DESIGNED DPG	CHKD: DOW	King County	DEPARTMENT OF TRANSPORTATION TROLLEY STANDARDS	DATE: MAR 00
DR: MM	SCALE: NONE			FILE
RECOM.	CONTRACT:		STEEL POLE HOLDDOWN BRACKET ASSEMBLY TANGENT CONSTRUCTION	DWG. NO. SA-348
APPROVED				SHT 1 OF 2

V:\Library & Standards\Standards\Trolley\Details\SA-348.1-2.dwg, SA-348.1, 1/5/2007 12:31:07 PM

ITEM #	QTY	DESCRIPTION	MANUFACTURER	CAT. NO.
01	2	DETROIT CLAMP ASSY	WABCO	19293-3007
03	4	GUY STRAIN INSUL	PORCELAIN PRODUCTS CO.	504
04	10	GUY GRIP DEADEND	PREFORMED	CDE-3106
05	4	WIRE ROPE CLIP, 5/16"	CROSBY	G450
06	AS REQD	FRICTION TAPE, 3/4" (6 WRAPS)		
07	4	THIMBLE, 3/8" XHD, OPEN	CROSBY	G414
08	VARIES	GUY STRAND	COPPERWELD	8M
10	1	HI-LITE DOUBLE CURVE HANGER	WABCO	54962-3001
11	1	7/8 TRANSLITE STRAIN INSUL CL-CL	WABCO	54975-6120
15	3	WIRE ROPE CLIP, 3/8"	CROSBY	G450
17	2	THIMBLE, 1/2" XHD, OPEN	CROSBY	G414
28	2	INSULATOR SPOOL	WABCO	16835-2000
39	1	5/8" SHACKLE	WABCO	13722-2000
55	VARIES	PHILLYSTRAN (3/8")	PHILLYSTRAN INC.	HPTG 6700I
56	1	PHILLYSTRAN BIG GRIP	PHILLYSTRAN INC.	PLP 2755
57	VARIES	FIBERGLASS REINFORCED PLASTIC (FRP) TUBE 5" ø X 1/4"	STRONGWELL	EXTREN SERIES 525
90	1	HEAVY PIPE CLAMP, GALV	GRINNELL	FIG. 216
102	4	FORGED THREE-PIECE ADJUSTABLE POLE BAND, ANNEALED & GALVANIZED	KORTICK MFG CO	
108	1	MAST ARM POLE END CAP	METRO STD	SA-108
110	1	MAST ARM UNDERSLING END CAP	METRO STD	SA-110

V:\Library & Standards\Standards\Trolley\Details\SA-348.1-2.dwg, SA-348.2, 1/5/2007 12:31:14 PM

DESIGNED	CHKD:		DEPARTMENT OF TRANSPORTATION TROLLEY STANDARDS	DATE:
DPG	DOW			MAR 00
DR:	SCALE:			FILE
TMB	NONE			
RECOM.	CONTRACT:	King County	STEEL POLE HOLDDOWN BRACKET ASSEMBLY TANGENT CONSTRUCTION	DWG. NO. SA-348
APPROVED				SHT 2 OF 2

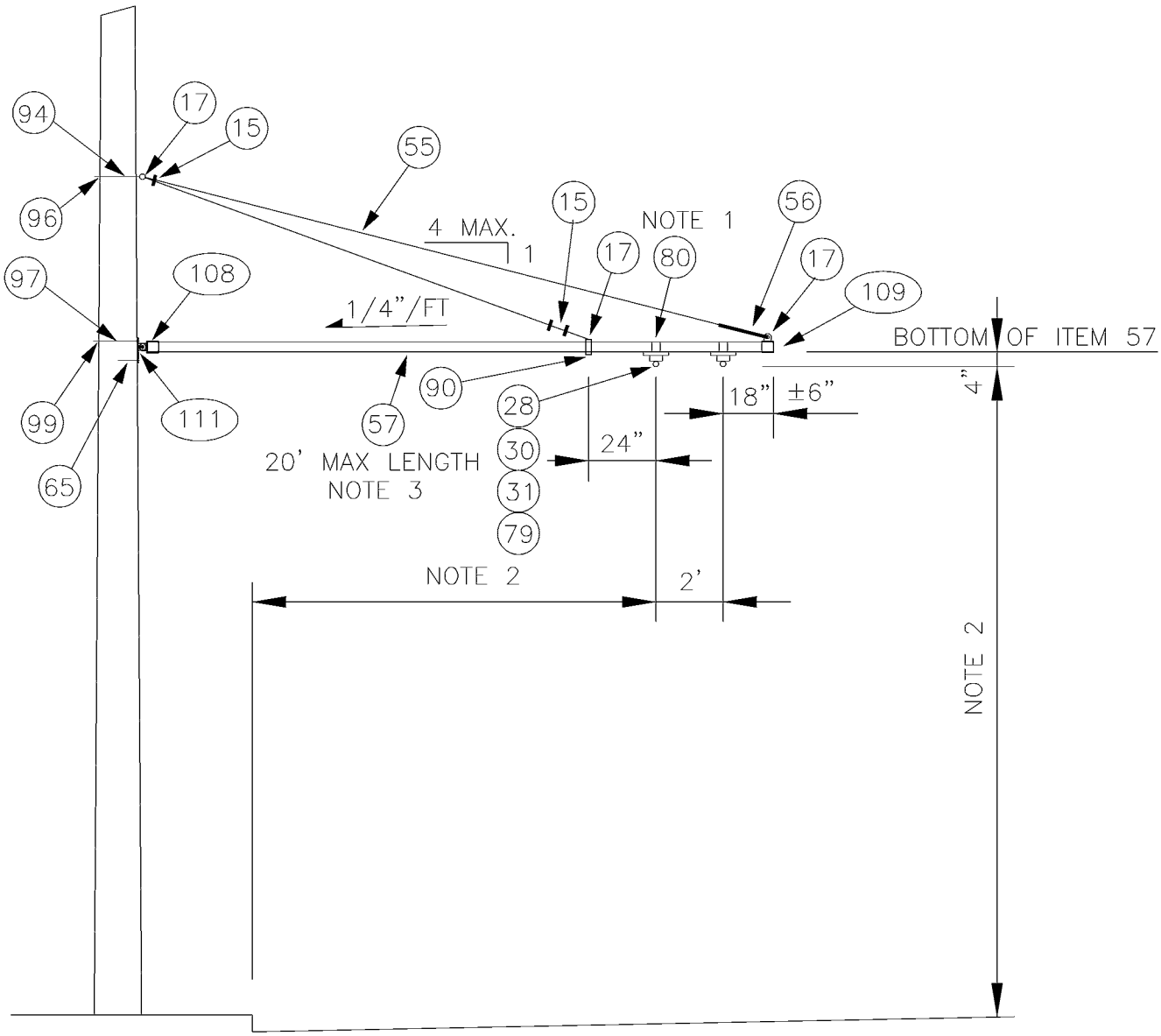

NOTES:

1. STAINLESS STEEL BANDING SHALL BE WRAPPED DOUBLE THICKNESS AROUND ITEM 57 PRIOR TO CLAMPING.
2. SEE SA–164 FOR HORIZONTAL & VERTICAL DIMENSIONS TO TROLLEY WIRE.
3. DRILL 1/2" HOLE IN TUBE TO MATCH HOLE IN ITEMS 108 & 109 FOR INSERTION OF 3/8" SS BOLT.

DESIGNED PDG	CHKD: DOW	King County	DEPARTMENT OF TRANSPORTATION TROLLEY STANDARDS	DATE: MAY 98
DR: MM	SCALE: NONE			FILE
RECOM.	CONTRACT:		WOOD POLE BRACKET ASSEMBLY TANGENT CONSTRUCTION	DWG. NO. SA–351
APPROVED				SHT 1 OF 2

V:\Library & Standards\Standards\Trolley\Details\SA-351.1-2.dwg, SA-351.1, 1/5/2007 12:31:20 PM

MATERIAL LIST

ITEM #	QTY	DESCRIPTION	MANUFACTURER	CAT. NO.
15	3	WIRE ROPE CLIP, 3/8"	CROSBY	G450
17	3	THIMBLE, 1/2" XHD, OPEN	CROSBY	G414
28	2	INSULATOR SPOOL	WABCO	16835-2000
30	2	TROLLEY SUPPORT-LARGE PIPE ARMS	WABCO	54940-4001
31	2	SPRING DETROIT CLAMP	WABCO	54959-3001
55	VARIES	PHILLYSTRAN (3/8")	PHILLYSTRAN INC.	HPTG 6700I
56	1	PHILLYSTRAN BIG GRIP	PHILLYSTRAN INC.	PLP 2755
57	VARIES	FIBERGLASS REINFORCED PLASTIC (FRP) TUBE 3 1/2" Ø X 1/2"	MORRISON MOLDED FG	EXTREN SERIES 525
65	1	LAG SCREW, FETTER DRIVE, 1/2"X 4"	JOSLYN	J8754
79	2	5/8"-11 UNC X 1 3/8" STUD		
80	VARIES	3/4" STAINLESS STEEL BANDING	BAND-IT	TYPE 201
90	1	HEAVY PIPE CLAMP, GALV, 3" IPS	GRINNELL	FIG. 216
94	1	5/8" OVAL EYEBOLT W/ NUT	JOSLYN	J94XX
96	1	SQ CURVED WASHER 3" X 3" X 1/4", 11/16" DIA	JOSLYN	J113
97	1	3/4" MACHINE BOLT	JOSLYN	J89XX
99	1	SQ CURVED WASHER 3" X 3" X 1/4", 13/16" DIA	JOSLYN	J6823
108	1	MAST ARM POLE END CAP	METRO STD	SA-108
109	1	MAST ARM ARM END CAP	METRO STD	SA-109
111	1	WOOD POLE MOUNTING BRACKET	METRO STD	SA-111

DESIGNED: DPG	CHKD: DOW	King County	DEPARTMENT OF TRANSPORTATION TROLLEY STANDARDS	DATE: MAR 97
DR: MM	SCALE: NTS			FILE
RECOM.	CONTRACT:		WOOD POLE BRACKET ASSEMBLY TANGENT CONSTRUCTION	DWG. NO. SA-351
APPROVED				SHT 2 OF 2

V:\Library & Standards\Standards\Trolley\Details\SA-351.1-2.dwg, SA-351.2, 1/5/2007 12:31:25 PM

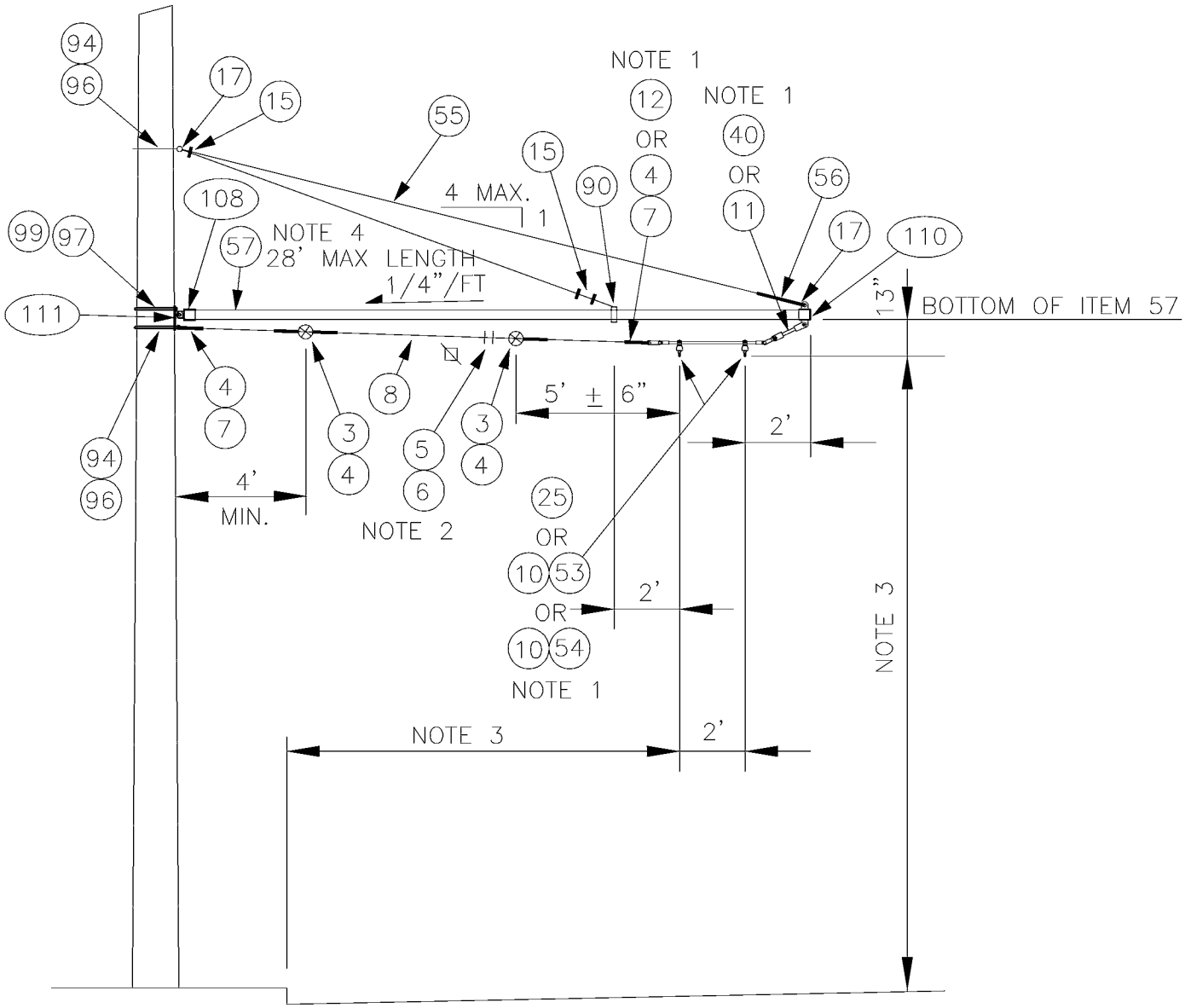

NOTES:

1. USE ITEMS 4,7,10,11 & 53 WHEN ANGLE VARIES FROM 1° TO 5°. USE ITEMS 4,7, 10,11 & 54 WHEN ANGLE VARIES FROM 5° TO 7.5°. USE ITEMS 12, 25, & 40 WHEN ANGLE IS GREATER THAN 8°. SEGMENTS SHALL NOT BE USED FOR ANGLES GREATER THAN 12° WHEN POLE IS ON INSIDE OF CURVE.
2. PROVIDE TENSION ADJUSTMENT POINTS AT LOCATIONS INDICATED BY "⊠". PROVIDE WIRE ROPE CLIPS AT THESE LOCATIONS. SEE SA-166.
3. SEE SA-164 FOR HORIZONTAL & VERTICAL DIMENSIONS TO TROLLEY WIRE.
4. DRILL 1/2" HOLE IN TUBE TO MATCH HOLE IN ITEMS 108 & 110 FOR INSERTION OF 3/8" SS BOLT.
5. LEVEL CURVE HANGER (ITEM 10) BY ADJUSTING HANGER ARMS.

DESIGNED DPG	CHKD: DOW	King County	DEPARTMENT OF TRANSPORTATION TROLLEY STANDARDS	DATE: MAR 00
DR: MM	SCALE: NONE			FILE
RECOM.	CONTRACT:		WOOD POLE BRACKET ASSEMBLY CURVE CONSTRUCTION	DWG. NO. SA-352
APPROVED				SHT 1 OF 2

V:\Library & Standards\Standards\Trolley\Details\SA-352.1-2.dwg, SA-352.1, 1/5/2007 12:31:32 PM

MATERIAL LIST

ITEM #	QTY	DESCRIPTION	MANUFACTURER	CAT. NO.
03	2	GUY STRAIN INSUL	PORCELAIN PRODUCTS CO.	504
04	VARIES	GUY GRIP DEADEND	PREFORMED	CDE-3106
05	2	WIRE ROPE CLIP, 5/16"	CROSBY	G450
06	AS REQD	FRICTION TAPE, 3/4" (6 WRAPS)		
07	VARIES	THIMBLE, 3/8" XHD, OPEN	CROSBY	G414
08	VARIES	GUY STRAND	COPPERWELD	8M
10	VARIES	HI-LITE DOUBLE CURVE HANGER	WABCO	54962-3001
11	VARIES	7/8 TRANSLITE STRAIN INSUL CL-CL	WABCO	54975-6120
12	VARIES	7/8 TRANSLITE STRAIN INSUL CL-EYE	WABCO	55339-6120
15	3	WIRE ROPE CLIP, 3/8"	CROSBY	G450
17	2	THIMBLE, 1/2" XHD, OPEN	CROSBY	G414
25	VARIES SEE PLAN	CURVE SEGMENT 8-12 DEG TYPE C CURVE SEGMENT 13-27 DEG TYPE C CURVE SEGMENT 28-47 DEG TYPE C	WABCO WABCO WABCO	22301-3014 22302-3005 22303-3005
40	VARIES	7/8 TRANSLITE STRAIN INSUL CL-90	WABCO	54995-6120
53	VARIES	CURVE RAIL (1° TO 5° 2 FT LG)	K & M	851 B412/0
54	VARIES	CURVE RAIL (5.5° TO 7.5° 4 FT LG)	K & M	851 B412/1
55	VARIES	PHILLYSTRAN (3/8")	PHILLYSTRAN INC.	HPTG 6700I
56	1	PHILLYSTRAN BIG GRIP	PHILLYSTRAN INC.	PLP 2755
57	VARIES	FIBERGLASS REINFORCED PLASTIC (FRP) TUBE 5" Ø X 1/4"	MORRISON MOLDED FG	EXTREN SERIES 525
90	1	HEAVY PIPE CLAMP, GALV	GRINNELL	FIG. 216
94	2	5/8" OVAL EYEBOLT W/ NUT	JOSLYN	J94XX
96	2	SQ CURVED WASHER 3" X 3" X 1/4", 11/16" DIA	JOSLYN	J113
97	1	3/4" MACHINE BOLT	JOSLYN	J89XX
99	1	SQ CURVED WASHER 3" X 3" X 1/4", 13/16" DIA	JOSLYN	J6823
108	1	MAST ARM POLE END CAP	METRO STD	SA-108
110	1	MAST ARM UNDERSLING END CAP	METRO STD	SA-110
111	1	WOOD POLE MOUNTING BRACKET	METRO STD	SA-111

DESIGNED: DPG	CHKD: DOW	King County	DEPARTMENT OF TRANSPORTATION TROLLEY STANDARDS	DATE: MAR 00
DR: MM	SCALE: NTS		WOOD POLE BRACKET ASSEMBLY CURVE CONSTRUCTION	FILE
RECOM.	CONTRACT:			DWG. NO. SA-352
APPROVED				SHT 2 OF 2

V:\Library & Standards\Standards\Trolley\Details\SA-352.1-2.dwg, SA-352.2, 1/5/2007 12:31:37 PM

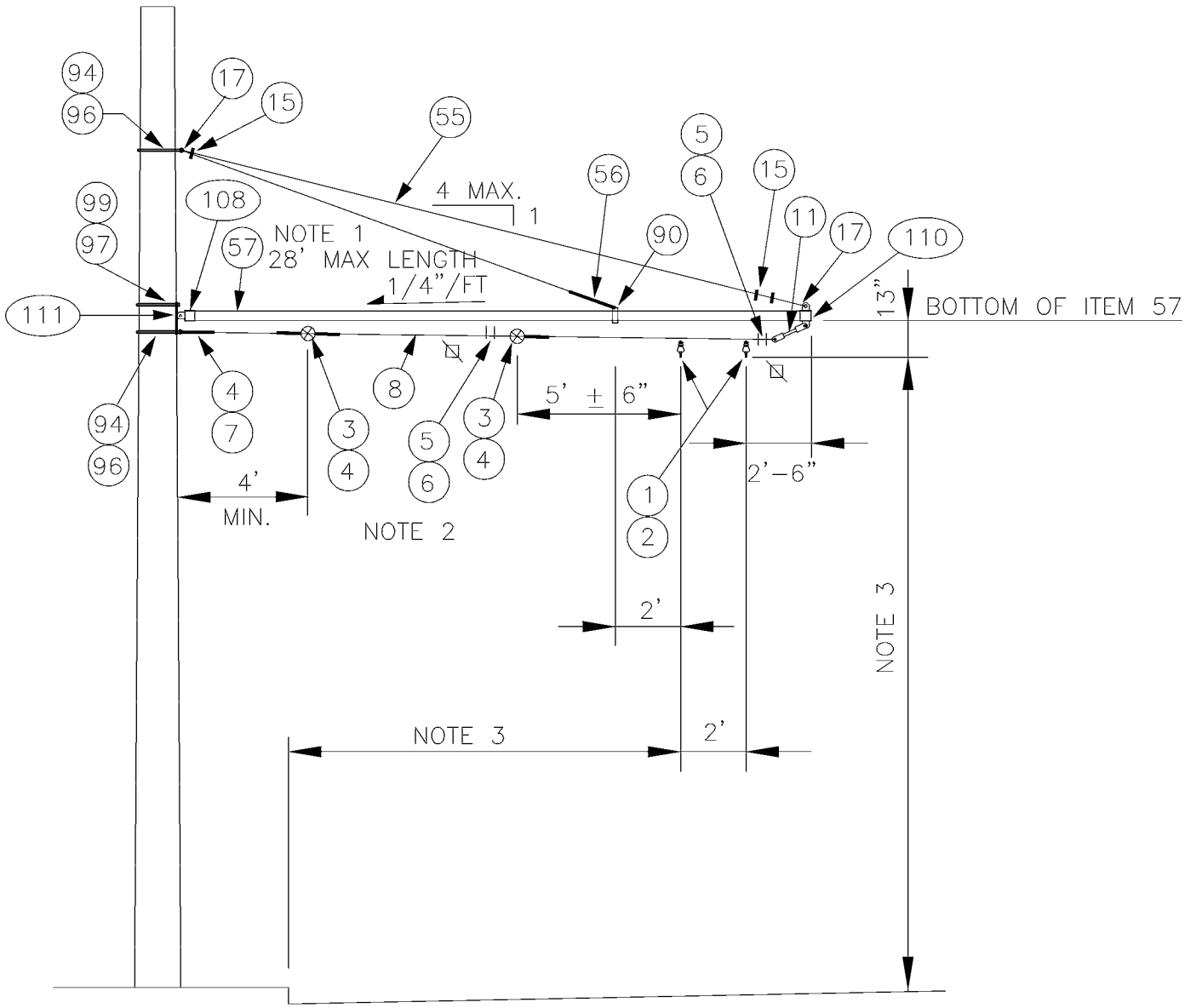

NOTES:

1. DRILL 1/2" HOLE IN TUBE TO MATCH HOLE IN ITEMS 108 & 110 FOR INSERTION OF 3/8" SS BOLT.
2. PROVIDE TENSION ADJUSTMENT POINTS AT LOCATIONS INDICATED BY "⊠". PROVIDE WIRE ROPE CLIPS AT THESE LOCATIONS. SEE SA-166.
3. SEE SA-164 FOR HORIZONTAL & VERTICAL DIMENSIONS TO TROLLEY WIRE.
4. HANG CLAMP (ITEM 1) VERTICAL BY ADJUSTING SPAN HANGER (ITEM 2).

DESIGNED DPG	CHKD: AJW	King County	DEPARTMENT OF TRANSPORTATION TROLLEY STANDARDS	DATE: MARCH 00
DR: AJW	SCALE: NONE			FILE
RECOM.	CONTRACT:		WOOD POLE BRACKET ASSEMBLY UNDERSLING CONSTRUCTION	DWG. NO. SA-355
APPROVED				SHT 1 OF 2

V:\Library & Standards\Standards\Trolley\Details\SA-355.1-2.dwg, SA-355.1, 1/5/2007 12:31:44 PM

MATERIAL LIST

ITEM #	QTY	DESCRIPTION	MANUFACTURER	CAT. NO.
01	2	DETROIT CLAMP ASSY	WABCO	19293-3007
02	2	AGC TANGENT SPAN HANGER	WABCO	19360-2000
03	4	GUY STRAIN INSUL	PORCELAIN PRODUCTS CO.	504
04	10	GUY GRIP DEADEND	PREFORMED	CDE-3106
05	4	WIRE ROPE CLIP, 5/16"	CROSBY	G450
06	AS REQD	FRICTION TAPE, 3/4" (6 WRAPS)		
07	4	THIMBLE, 3/8" XHD, OPEN	CROSBY	G414
08	VARIES	GUY STRAND	COPPERWELD	8M
11	1	7/8 TRANSLITE STRAIN INSUL CL-CL	WABCO	54975-6120
15	3	WIRE ROPE CLIP, 3/8"	CROSBY	G450
55	VARIES	PHILLYSTRAN (3/8")	PHILLYSTRAN INC.	HPTG 6700I
56	1	PHILLYSTRAN BIG GRIP	PHILLYSTRAN INC.	PLP 2755
57	VARIES	FIBERGLASS REINFORCED PLASTIC (FRP) TUBE 5" ø X 1/4"	STRONGWELL	EXTREN SERIES 525
90	1	HEAVY PIPE CLAMP, GALV	GRINNELL	FIG. 216
94	2	5/8" OVAL EYEBOLT WITH NUT	JOSLYN	J94XX
96	2	SQ CURVED WASHER 3"×3"×1/4" 11/16" DIA	JOSLYN	J113
97	1	3/4" MACHINE BOLT	JOSLYN	J89XX
102	3	FORGED THREE-PIECE ADJUSTABLE POLE BAND, ANNEALED & GALVANIZED	KORTICK MFG CO	
108	1	MAST ARM POLE END CAP	METRO STD	SA-108
110	1	MAST ARM UNDERSLING END CAP	METRO STD	SA-110
111	1	WOOD POLE MOUNTING BRACKET	METRO STD	SA-111

V:\Library & Standards\Standards\Trolley\Details\SA-355.1-2.dwg, SA-355.2, 1/5/2007 12:31:49 PM

DESIGNED DPG	CHKD: AJW	King County	DEPARTMENT OF TRANSPORTATION TROLLEY STANDARDS	DATE: MARCH 00
DR: AJW	SCALE: NONE			FILE
RECOM.	CONTRACT:		WOOD POLE HOLDDOWN BRACKET ASSEMBLY TANGENT CONSTRUCTION	DWG. NO. SA-355
APPROVED				SHT 2 OF 2

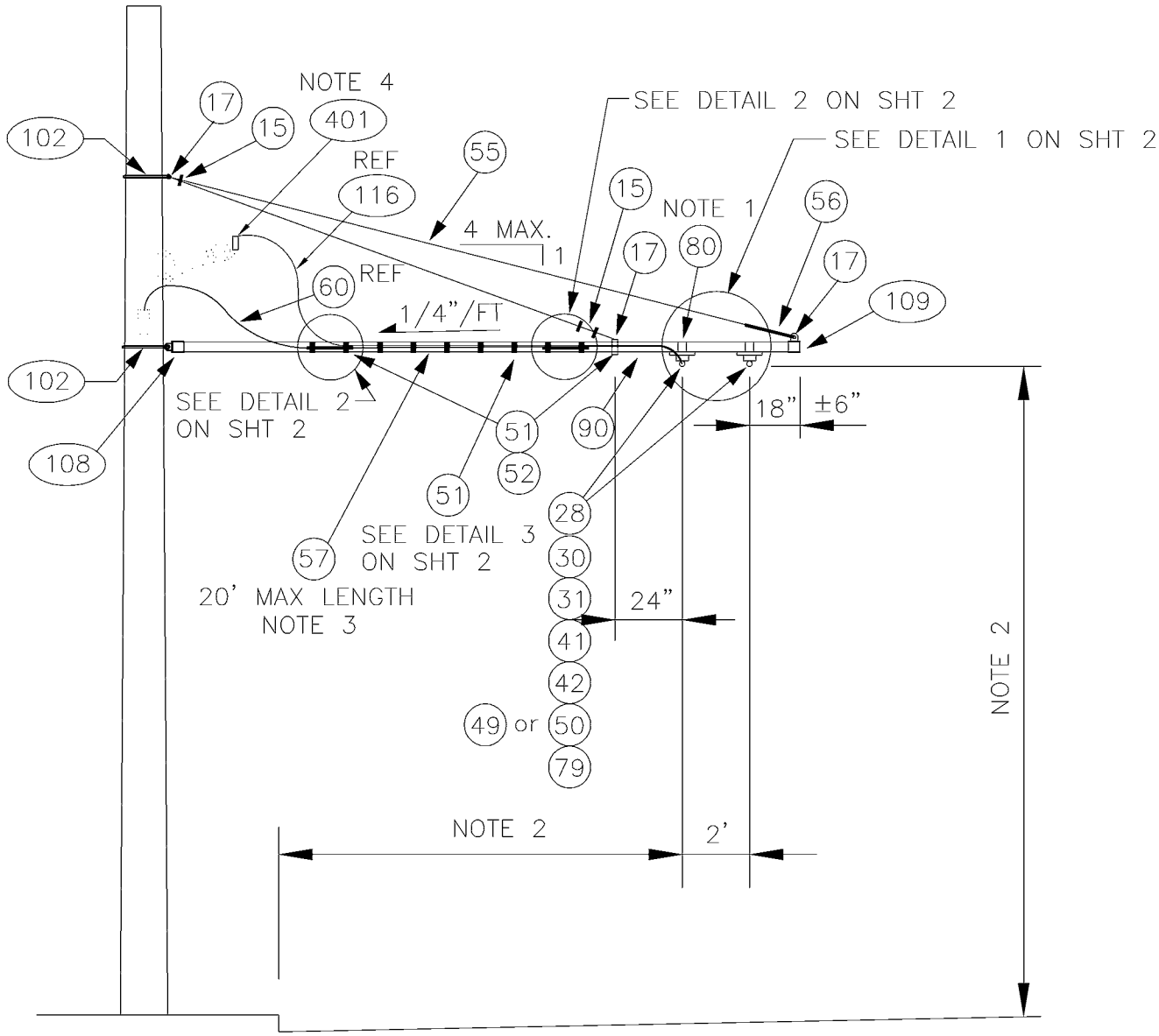

NOTES:

1. STAINLESS STEEL BANDING SHALL BE WRAPPED DOUBLE THICKNESS AROUND ITEM 57 PRIOR TO CLAMPING.
2. SEE SA-164 FOR HORIZONTAL & VERTICAL DIMENSIONS TO TROLLEY WIRE.
3. DRILL 1/2" HOLE IN TUBE TO MATCH HOLE IN ITEMS 108 & 109 FOR INSERTION OF 3/8" SS BOLT.
4. 60, 116 & 401 SHOWN FOR REFERENCE ONLY, SEE SA-401 FOR DETAILS. DOUBLE NEGATIVE FEEDER REQUIRES ONLY ONE SA-401.

V:\Library & Standards\Standards\Trolley\Details\SA-358.1-2.dwg, SA-349.1, 1/5/2007 12:31:57 PM

DESIGNED DPG	CHKD: DOW	King County	DEPARTMENT OF TRANSPORTATION TROLLEY STANDARDS	DATE: MAY 98
DR: MM	SCALE: NONE			FILE
RECOM.	CONTRACT:		STEEL POLE TANGENT FEEDER BRACKET ASSEMBLY	DWG. NO. SA-349
APPROVED				SHT 1 OF 3

DOUBLE FEEDER

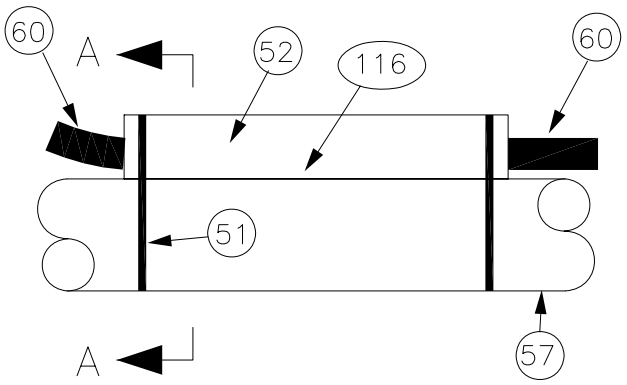

DETAIL 2

SINGLE FEEDER

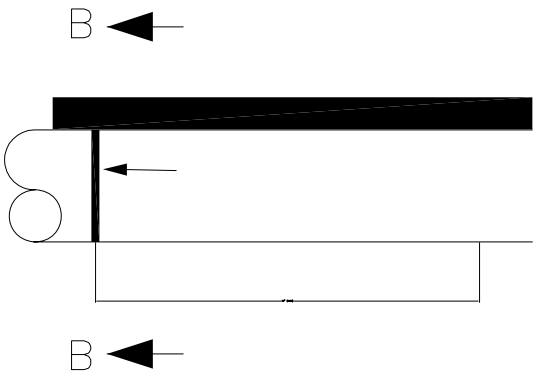

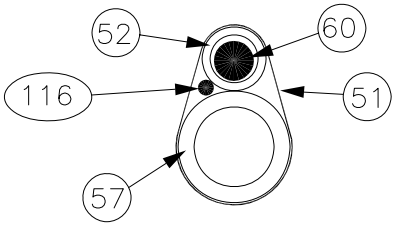

VIEW A–A

SINGLE FEEDER

116

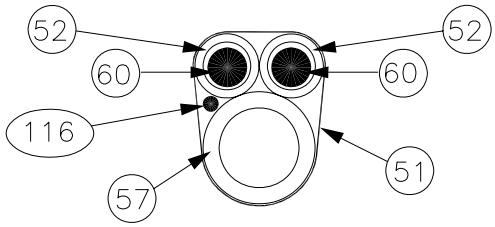

VIEW A–A

DOUBLE FEEDER

V:\Library & Standards\Working Documents\Trolley\Details\Completed Detail Drawing Files\SA-349.1-3.dwg, SA-349.2, 1/10/2007 3:52:36 PM

DESIGNED DPG	CHKD: DOW	King County	DEPARTMENT OF TRANSPORTATION TROLLEY STANDARDS	DATE: OCT 95
DR: TMB	SCALE: NONE			FILE
RECOM.	CONTRACT:		STEEL POLE TANGENT FEEDER BRACKET ASSEMBLY	DWG. NO. SA–349
APPROVED				SHT 2 OF 3

MATERIAL LIST

ITEM #	QTY	DESCRIPTION	MANUFACTURER	CAT. NO.
15	3	WIRE ROPE CLIP, 3/8"	CROSBY	G450
17	3	THIMBLE, 1/2" XHD, OPEN	CROSBY	G414
28	2	INSULATOR SPOOL	WABCO	16835-2000
30	2	TROLLEY SUPPORT-LARGE PIPE ARMS	WABCO	54940-4001
31	2	SPRING DETROIT CLAMP	WABCO	54959-3001
41	VARIES	H.S.P. FEEDER CLAMP ASSY, BRONZE	WABCO	19880-2000
42	VARIES	FEEDER CLAMP, BRONZE	WABCO	19790-4004
49	VARIES	COMPRESSION CONNECTOR COPPER-LONG BARREL-TIN PLATED-FLARED	ANDERSON/ SQUARE D	VHCL-2/0-12BNF
50	VARIES	COMPRESSION CONNECTOR COPPER-LONG BARREL-TIN PLATED-FLARED	ANDERSON/ SQUARE D	VHCL-500-12BNF
51	AS REQD	MULTI-LOK TIES (18") NYLON COATED	BAND-IT	AE714
52	2 12" PIECES	TUF NEOPRENE AIR HOSE SLEEVE 1.5" ID X 2.0625" OD (BLACK)	MCMASTER-CARR	3 BRAID
55	VARIES	PHILLYSTRAN (3/8")	PHILLYSTRAN INC.	HPTG 6700I
56	1	PHILLYSTRAN BIG GRIP	PHILLYSTRAN INC.	PLP 2755
57	VARIES	FIBERGLASS REINFORCED PLASTIC (FRP) TUBE 3 1/2" Ø X 1/2"	MORRISON MOLDED FG	EXTREN SERIES 525
60	AS REQD	FEED SPAN CABLE 500 KCM CU, UN-SHIELDED, 5 KV EPR W/ PVC JACKET		
79	2	5/8"-11 UNC X 1 3/8" STUD		
80	VARIES	3/4" STAINLESS STEEL BANDING	BAND-IT	TYPE 201
90	1	HEAVY PIPE CLAMP, GALV, 3" IPS	GRINNELL	FIG. 216
102	2	FORGED THREE-PIECE ADJUSTABLE POLE BAND, ANNEALED & GALVANIZED	KORTICK MFG CO	
108	1	MAST ARM POLE END CAP	METRO STD	SA-108
109	1	MAST ARM ARM END CAP	METRO STD	SA-109
116	VARIES	WIRE, 2 OR 5 KV, #4 AWG CU, JACKETED, UNSHIELDED		

DESIGNED: DPG	CHKD: DOW	King County	DEPARTMENT OF TRANSPORTATION TROLLEY STANDARDS	DATE: MAR 97
DR: TMB	SCALE: NONE			FILE
RECOM.	CONTRACT:		STEEL POLE TANGENT FEEDER BRACKET ASSEMBLY	DWG. NO. SA-349
APPROVED				SHT 3 OF 3

V:\Library & Standards\Standards\Trolley\Details\SA-358.1-2.dwg, SA-349.3, 1/5/2007 12:32:07 PM

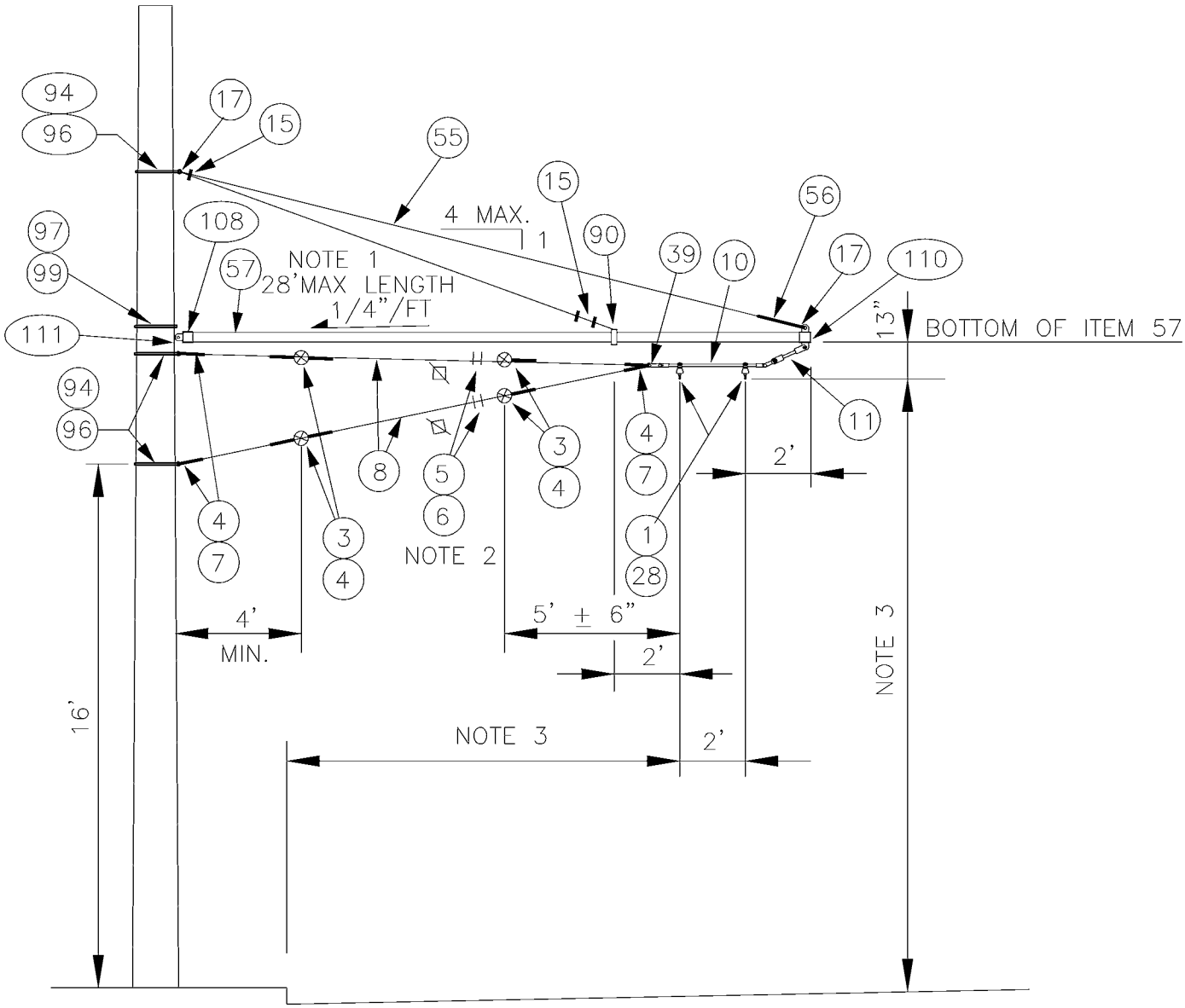

NOTES:

1. DRILL 1/2" HOLE IN TUBE TO MATCH HOLE IN ITEMS 108 & 109 FOR INSERTION OF 3/8" SS BOLT.
2. PROVIDE TENSION ADJUSTMENT POINTS AT LOCATIONS INDICATED BY "⊠". PROVIDE WIRE ROPE CLIPS AT THESE LOCATIONS. SEE SA–166.
3. SEE SA–164 FOR HORIZONTAL & VERTICAL DIMENSIONS TO TROLLEY WIRE.
4. LEVEL CURVE HANGER(ITEM 10) BY ADJUSTING HANGER ARMS.

DESIGNED DPG	CHKD: AJW	King County	DEPARTMENT OF TRANSPORTATION TROLLEY STANDARDS	DATE: MARCH 00
DR: AJW	SCALE: NONE			FILE
RECOM.	CONTRACT:		WOOD POLE HOLDDOWN BRACKET ASSEMBLY TANGENT CONSTRUCTION	DWG. NO. SA–358
APPROVED				SHT 1 OF 2

V:\Library & Standards\Standards\Trolley\Details\SA-358.1-2.dwg, SA-358.1, 1/5/2007 12:32:13 PM

MATERIAL LIST

ITEM #	QTY	DESCRIPTION	MANUFACTURER	CAT. NO.
01	2	DETROIT CLAMP ASSY	WABCO	19293-3007
03	4	GUY STRAIN INSUL	PORCELAIN PRODUCTS CO.	504
04	10	GUY GRIP DEADEND	PREFORMED	CDE-3106
05	4	WIRE ROPE CLIP, 5/16"	CROSBY	G450
06	AS REQD	FRICTION TAPE, 3/4" (6 WRAPS)		
07	4	THIMBLE, 3/8" XHD, OPEN	CROSBY	G414
08	VARIES	GUY STRAND	COPPERWELD	8M
10	1	HI-LITE DOUBLE CURVE HANGER	WABCO	54962-3001
11	1	7/8 TRANSLITE STRAIN INSUL CL-CL	WABCO	54975-6120
15	3	WIRE ROPE CLIP, 3/8"	CROSBY	G450
17	2	THIMBLE, 1/2" XHD, OPEN	CROSBY	G414
28	2	INSULATOR SPOOL	WABCO	16835-2000
39	1	5/8" SHACKLE	WABCO	13722-2000
55	VARIES	PHILLYSTRAN (3/8")	PHILLYSTRAN INC.	HPTG 6700I
56	1	PHILLYSTRAN BIG GRIP	PHILLYSTRAN INC.	PLP 2755
57	VARIES	FIBERGLASS REINFORCED PLASTIC (FRP) TUBE 5" ø X 1/4"	STRONGWELL	EXTREN SERIES 525
90	1	HEAVY PIPE CLAMP, GALV	GRINNELL	FIG. 216
94	3	5/8" OVAL EYEBOLT WITH NUT	JOSLYN	J94XX
96	3	SQ CURVED WASHER 3"x3"x1/4" 11/16" DIA	JOSLYN	J113
97	1	3/4" MACHINE BOLT	JOSLYN	J89XX
99	1	WOOD POLE MOUNTING BRACKET	METRO STD	SA-111
102	3	FORGED THREE-PIECE ADJUSTABLE POLE BAND, ANNEALED & GALVANIZED	KORTICK MFG CO	
108	1	MAST ARM POLE END CAP	METRO STD	SA-108
110	1	MAST ARM UNDERSLING END CAP	METRO STD	SA-110

V:\Library & Standards\Standards\Trolley\Details\SA-358.1-2.dwg, SA-358.2, 1/5/2007 12:32:19 PM

DESIGNED: DPG	CHKD: AJW	King County	DEPARTMENT OF TRANSPORTATION TROLLEY STANDARDS	DATE: MARCH 00
DR: AJW	SCALE: NONE			FILE
RECOM.	CONTRACT:		WOOD POLE HOLDDOWN BRACKET ASSEMBLY TANGENT CONSTRUCTION	DWG. NO. SA-358
APPROVED				SHT 2 OF 2

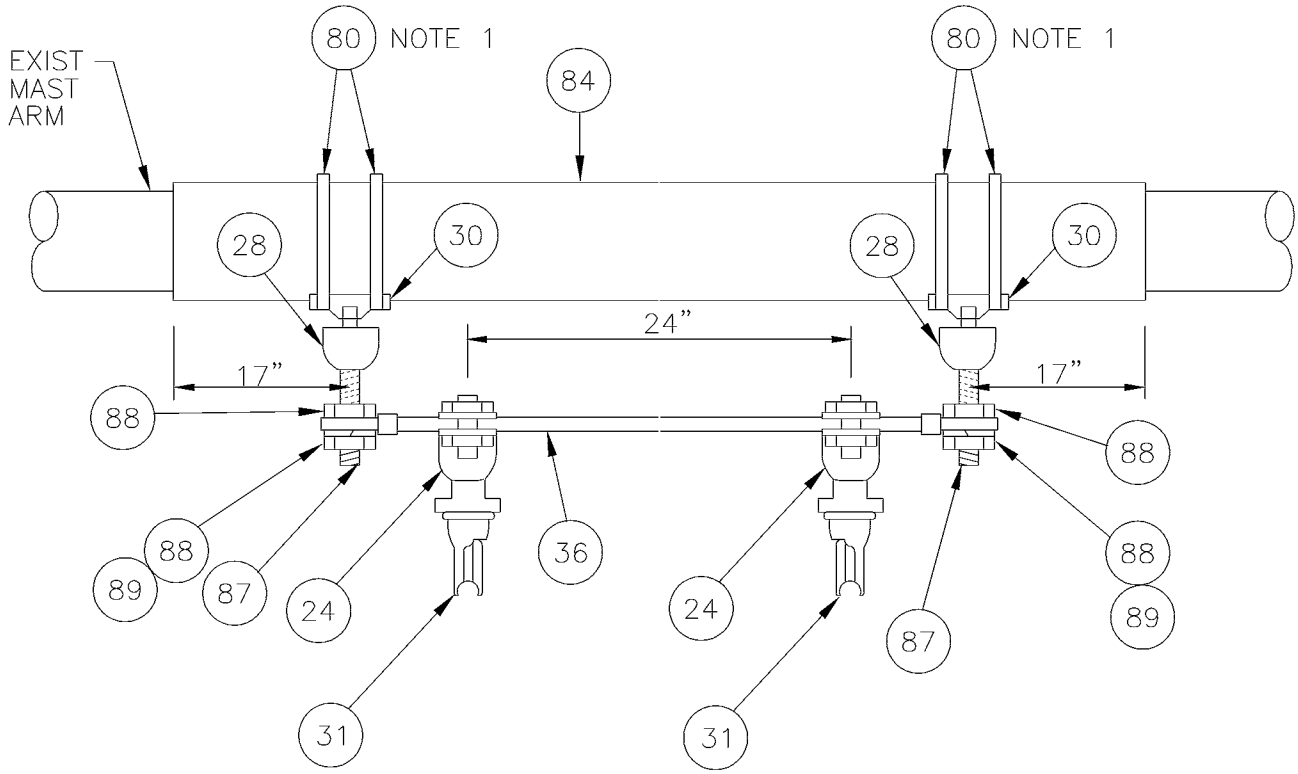

NOTES:

1. STAINLESS STEEL BANDING SHALL BE WRAPPED DOUBLE THICKNESS AROUND POLE COVERING MATERIAL PRIOR TO CLAMPING.
2. MATERIAL FOR THREADED RODS AND NUTS SHALL BE ASTM CLASS A-307 STEEL.
3. HOT DIP GALVANIZE ALL METAL AFTER FABRICATION.

MATERIAL LIST

ITEM #	QTY	DESCRIPTION	MANUFACTURER	CAT. NO.
24	2	TROLLEY WIRE SUPPORT ASSY	WABCO	54962-3003
28	2	INSULATOR SPOOL	WABCO	16835-2000
30	2	TROLLEY SUPPORT-LARGE PIPE ARMS	WABCO	54940-4001
31	2	SPRING DETROIT CLAMP	WABCO	54959-3001
36	1	7/8 TRANSLITE STRAIN INSUL W/ ADJUST END FITTINGS	WABCO	54980-6385
80	AS REQD	3/4" STAINLESS STEEL BANDING	BAND-IT	TYPE 201
84	6 LF	SCHED 40 PVC, GREY, SPLIT		
87	2	5/8"-11 UNC X 6" THREADED ROD, GALV, ASTM A36		
88	4	5/8"-11 UNC HVY HEX JAM NUT, GALV, ASTM A563 GRA		
89	2	11/16" LOCKWASHER		

DESIGNED DPG	CHKD: DOW	King County	DEPARTMENT OF TRANSPORTATION TROLLEY STANDARDS	DATE: JUN 95
DR: TMB	SCALE: NONE		TRAFFIC MAST ARM TROLLEY SUPPORT	FILE
RECOM.	CONTRACT:			DWG. NO. SA-361
APPROVED				SHT 1 OF 1

V:\Library & Standards\Standards\Trolley\Details\SA-361.dwg, SA-361, 1/5/2007 12:32:25 PM

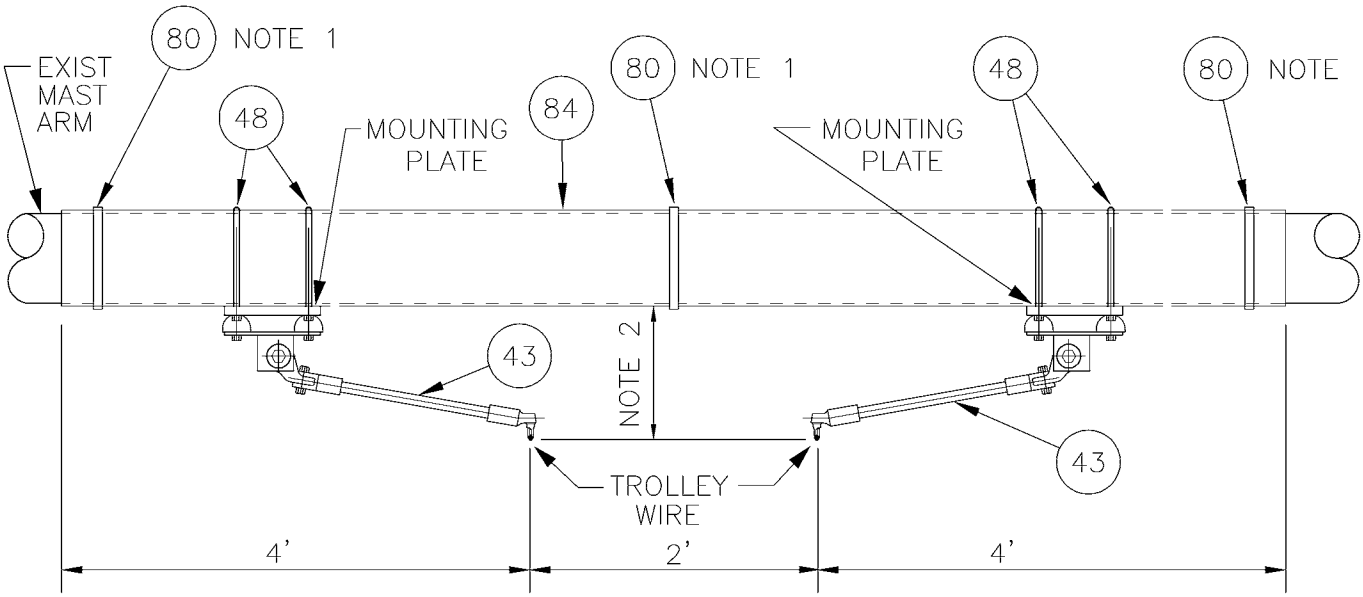

OUTBOARD MOUNTING

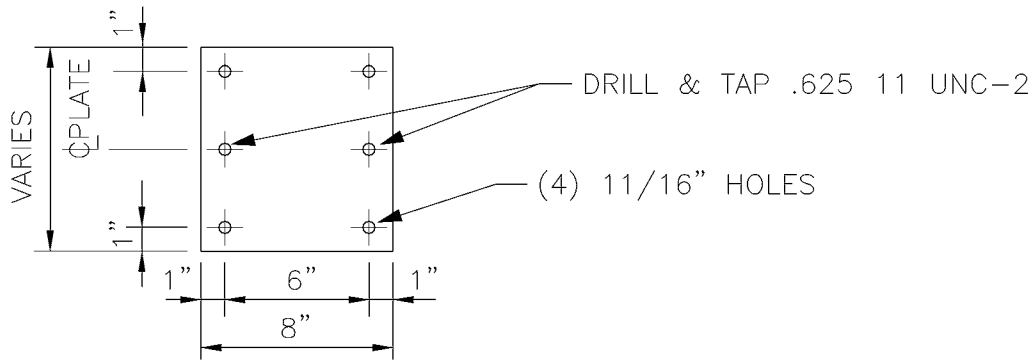

3/4" MOUNTING PLATE

(2 REQ'D)

NOTES:

1. STAINLESS STEEL BANDING SHALL BE WRAPPED DOUBLE THICKNESS AROUND POLE COVERING MATERIAL PRIOR TO CLAMPING. PLACE SPLIT DOWN ON ITEM 84.

2. DISTANCE VARIES. ITEMS 43 & 48 NOT REQ'D WHEN GREATER THAN 18". USE OFFSET MOUNTING (SHEET 2) WHEN SPACE LIMITS USE OF OUTBOARD MOUNTING.

MATERIAL LIST

ITEM #	QTY	DESCRIPTION	MANUFACTURER	CAT. NO.
43	2	TROLLEY WIRE SUPPORT ASSY	WABCO	59690-3001
48	4	5/8" U-BOLT GALV		
80	AS REQD	3/4" X 0.030" SS BANDING TYPE 201	BAND-IT	C206
84	10 LF	SCHED 40 PVC, GREY, SPLIT		

DESIGNED: DOW	CHKD: DPG	King County	DEPARTMENT OF TRANSPORTATION TROLLEY STANDARDS TRAFFIC MAST ARM TROLLEY SUPPORT	DATE: NOV 95
DRN: DOW	SCALE: NONE			FILE
RECOM.	CONTRACT:			DWG. NO. SA-362
APPROVED				SHT 1 OF 2

V:\Library\Standards\Trolley\Details\SA-362-1.dwg, SA-362-1, 1/5/2007 12:32:32 PM

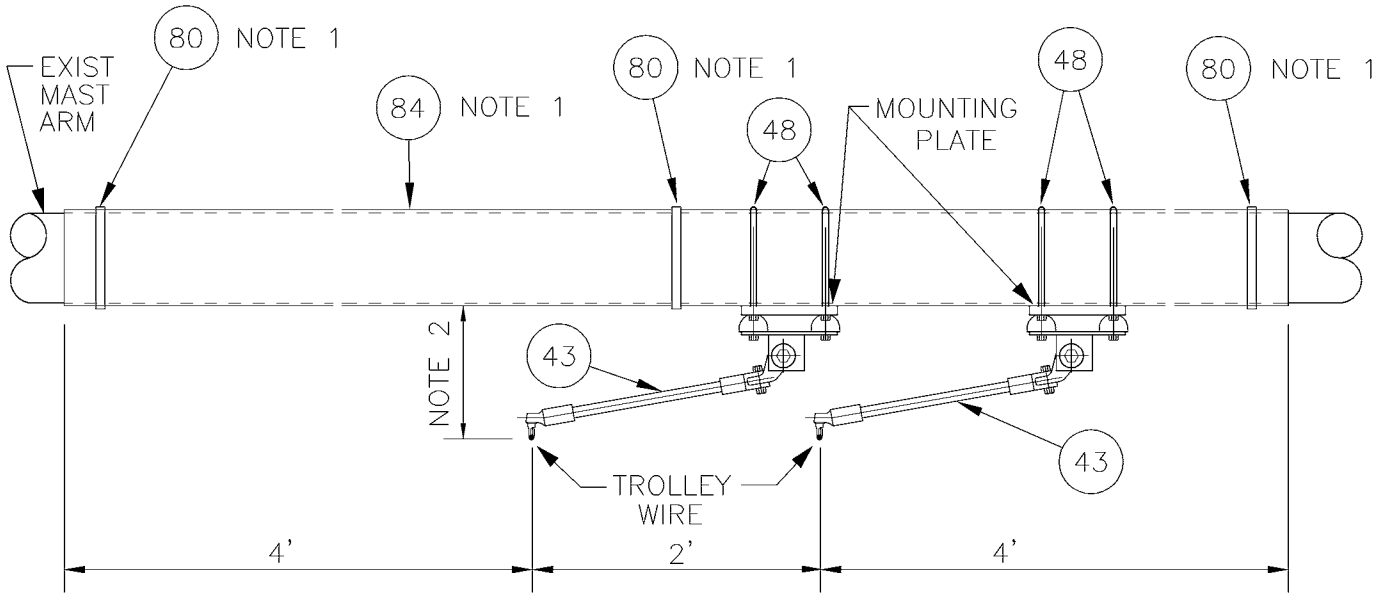

OFFSET MOUNTING

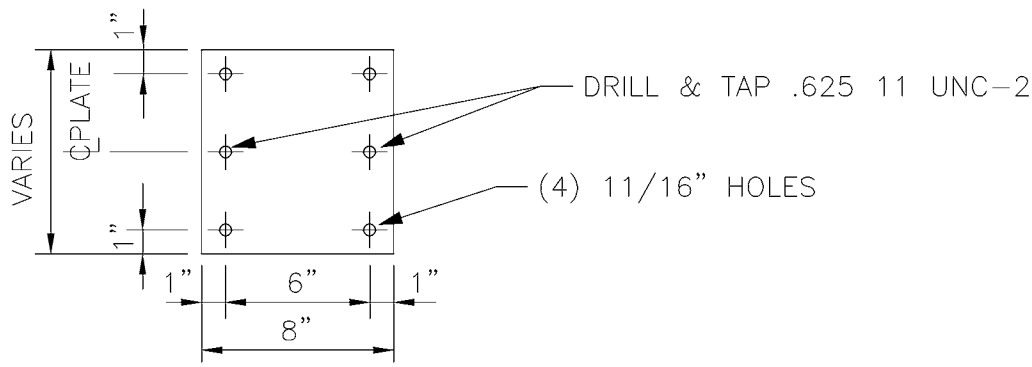

3/4" MOUNTING PLATE

(2 REQ'D)

NOTES:

1. STAINLESS STEEL BANDING SHALL BE WRAPPED DOUBLE THICKNESS AROUND POLE COVERING MATERIAL PRIOR TO CLAMPING. PLACE SPLIT DOWN ON ITEM 84.
2. DISTANCE VARIES. ITEMS 43 & 48 NOT REQ'D WHEN GREATER THAN 18". USE OUTBOARD MOUNTING (SEE PAGE 1) WHEN LESS THAN 9", OR ROTATE ONE ITEM 43 15° OUT OF THE PAPER & ONE ITEM 43 15° INTO THE PAPER.

MATERIAL LIST

ITEM #	QTY	DESCRIPTION	MANUFACTURER	CAT. NO.
43	2	TROLLEY WIRE SUPPORT ASSY	WABCO	59690-3001
48	4	5/8" U-BOLT GALV		
80	AS REQD	3/4" X 0.030" SS BANDING TYPE 201	BAND-IT	C206
84	10 LF	SCHED 40 PVC, GREY, SPLIT		

DESIGNED: DOW	CHKD: DPG	King County	DEPARTMENT OF TRANSPORTATION TROLLEY STANDARDS	DATE: NOV 95
DR: DOW	SCALE: NONE			FILE
RECOM.	CONTRACT:		TRAFFIC MAST ARM TROLLEY SUPPORT	DWG. NO. SA-362
APPROVED				SHT 2 OF 2

V:\Library & Standards\Standards\Trolley\Details\SA-362.1-2.dwg, SA-362.2, 1/5/2007 12:32:37 PM

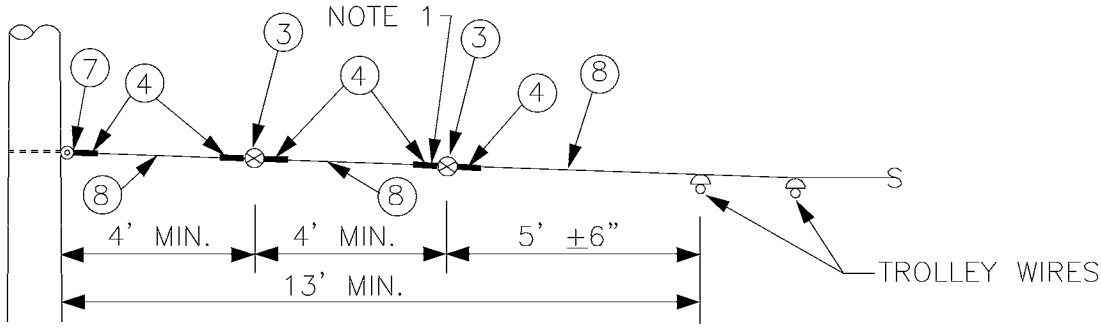

NORMAL SPAN
NOTE 2

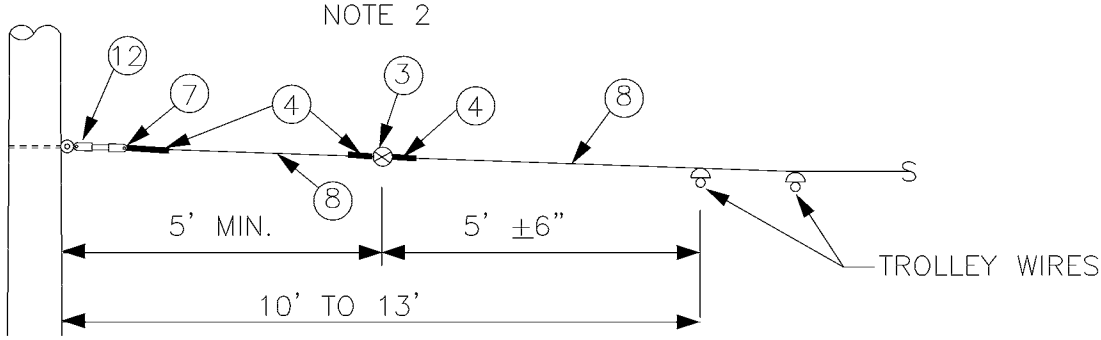

ALTERNATE SPAN A

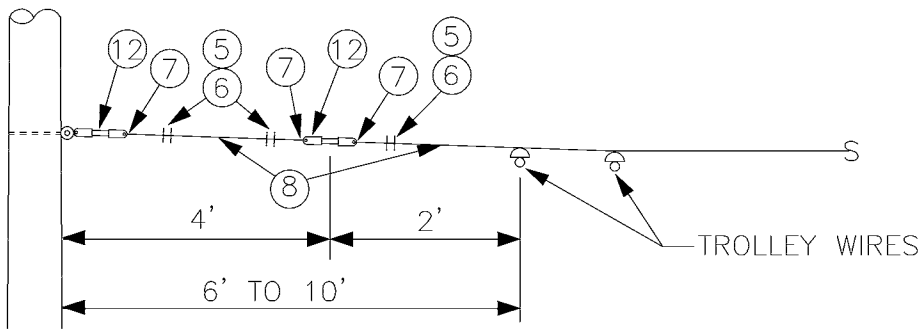

ALTERNATE SPAN B

NOTES:

1. WHERE ADJUSTABILITY IS REQUIRED, REPLACE GUY GRIP DEADEND (ITEM 4) WITH WIRE ROPE CLIPS (ITEM 5 & 6). SEE SA-166.
2. INCLUDES SA-301, SA-302, SA-305, SA-311, SA-312 & SA-315.

MATERIAL LIST

ITEM #	QTY	DESCRIPTION	MANUFACTURER	CAT. NO.
03	VARIES	GUY STRAIN INSUL	PORCELAIN PRODUCTS CO.	504
04	VARIES	GUY GRIP DEADEND	PREFORMED	CDE-3106
05	VARIES	WIRE ROPE CLIP, 5/16"	CROSBY	G450
06	AS REQD	FRICTION TAPE, 3/4" (6 WRAPS)		
07	VARIES	THIMBLE, 3/8" XHD, OPEN	CROSBY	G414
08	VARIES	GUY STRAND	COPPERWELD	8M
12	VARIES	7/8 TRANSLITE STRAIN INSUL CL-EYE	WABCO	55339-6120

DESIGNED DPG	CHKD: DOW	King County	DEPARTMENT OF TRANSPORTATION TROLLEY STANDARDS	DATE: OCT 95
DR: TMB	SCALE: NONE			FILE
RECOM.	CONTRACT:		SPAN WIRES LIMITED SPACE TYPICAL VARIANCES	DWG. NO. SA-370
APPROVED				SHT 1 OF 2

V:\Library & Standards\Standards\Trolley\Details\SA-370.1-2.dwg, SA-370.1, 1/5/2007 12:32:44 PM

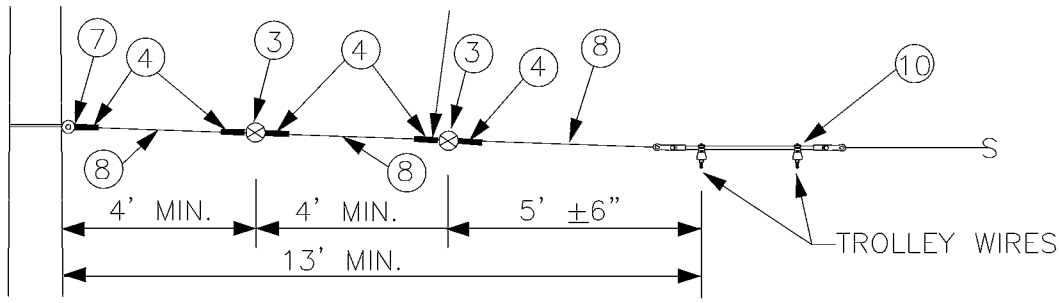

NORMAL SPAN
NOTE 2

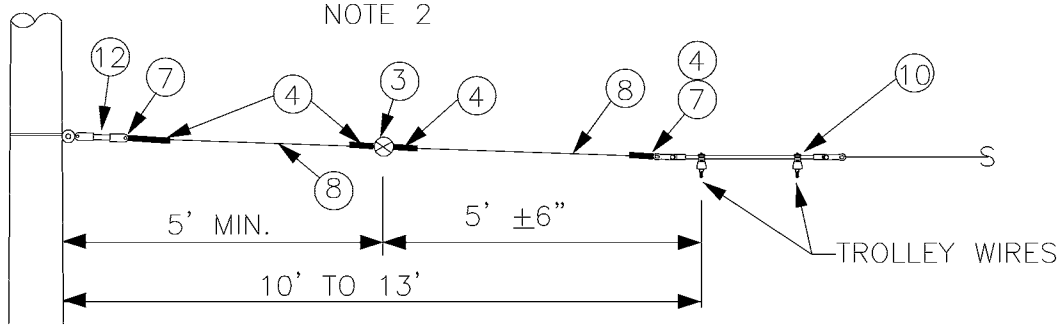

ALTERNATE SPAN A

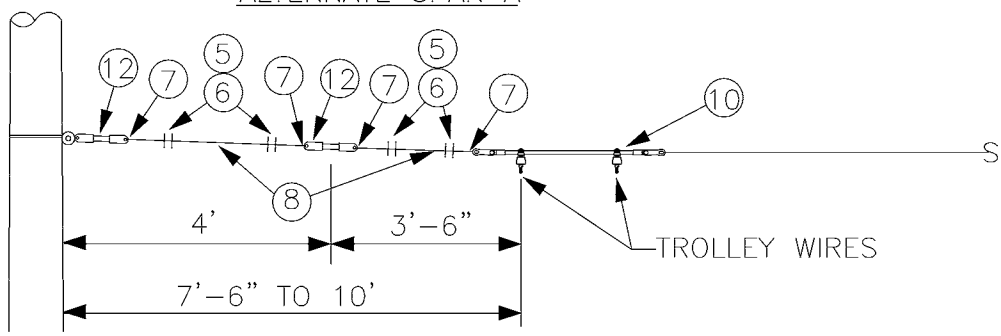

ALTERNATE SPAN B

NOTES:

1. WHERE ADJUSTABILITY IS REQUIRED, REPLACE GUY GRIP DEADEND (ITEM 4) WITH WIRE ROPE CLIPS (ITEM 5 & 6). SEE SA-166.

2. INCLUDES SA-303, SA-304, SA-307, SA-308, SA-313 & SA-314, SA-317 & SA-318.

MATERIAL LIST

ITEM #	QTY	DESCRIPTION	MANUFACTURER	CAT. NO.
03	VARIES	GUY STRAIN INSUL	PORCELAIN PRODUCTS CO.	504
04	VARIES	GUY GRIP DEADEND	PREFORMED	CDE-3106
05	VARIES	WIRE ROPE CLIP, 5/16"	CROSBY	G450
06	AS REQD	FRICTION TAPE, 3/4" (6 WRAPS)		
07	VARIES	THIMBLE, 3/8" XHD, OPEN	CROSBY	G414
08	VARIES	GUY STRAND	COPPERWELD	8M
10	VARIES	HI-LITE DOUBLE CURVE HANGER	WABCO	54962-3001
12	VARIES	7/8 TRANSLITE STRAIN INSUL CL-EYE	WABCO	55339-6120

DESIGNED DPG	CHKD: DOW	King County	DEPARTMENT OF TRANSPORTATION TROLLEY STANDARDS	DATE: OCT 95
DR: TMB	SCALE: NONE			FILE
RECOM.	CONTRACT:		SPAN WIRES LIMITED SPACE TYPICAL VARIANCES	DWG. NO. SA-370
APPROVED				SHT 2 OF 2

V:\Library & Standards\Standards\Trolley\Details\SA-370.1-2.dwg, SA-370.2, 1/5/2007 12:32:49 PM

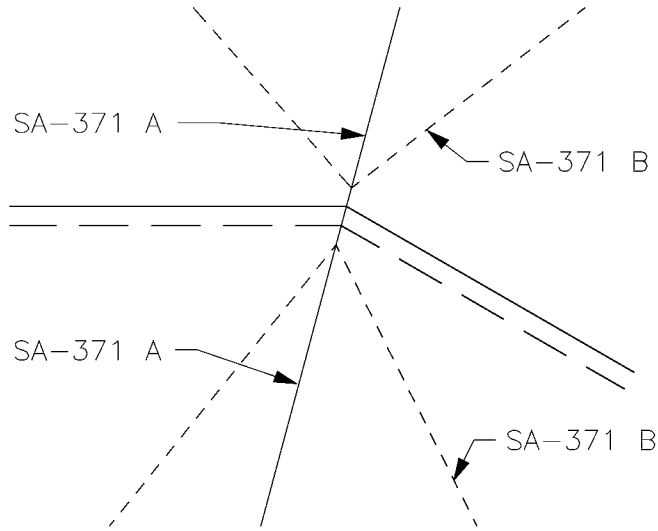

CURVE SEGMENT PULLOFFS

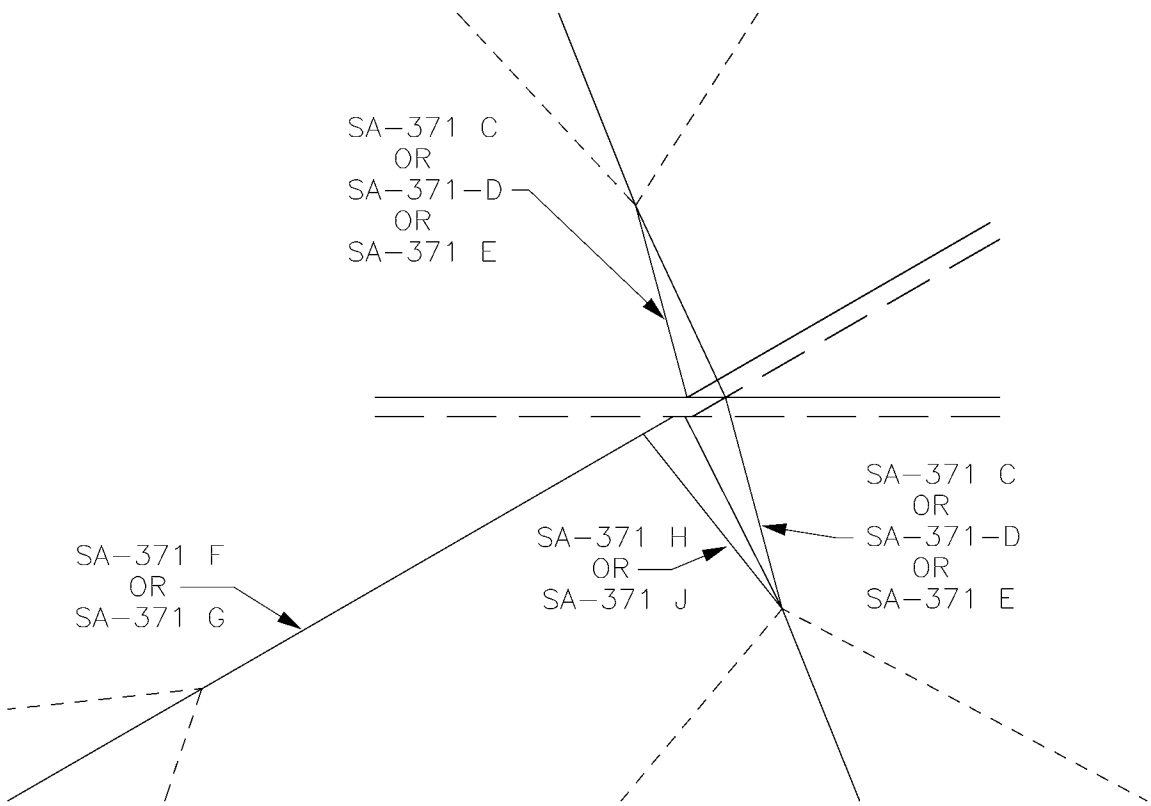

SWITCH PULLOFFS

DESIGNED DPG	CHKD: DOW	King County	DEPARTMENT OF TRANSPORTATION TROLLEY STANDARDS	DATE: NOV 94
DR: TMB	SCALE: NONE		SWITCH & CURVE SEGMENT PULLOFFS	FILE
RECOM.	CONTRACT:			DWG. NO. SA-371
APPROVED				SHT 1 OF 9

V:\Library & Standards\Standards\Trolley\Details\SA-371.1-9.dwg, SA-371.1, 1/5/2007 12:32:55 PM

NOTES

1. A POLE COLLAR OR POLE EYEBOLT IS REQUIRED PER SA-102 OR SA-103 UNLESS A BUILDING EYEBOLT ATTACHMENT IS USED. INSTALLATION HEIGHT IS INDICATED ON THE OVERHEAD DRAWINGS.

2. PROVIDE TENSION ADJUSTMENT POINTS AT LOCATIONS INDICATED BY "⧅". PROVIDE WIRE ROPE CLIPS AT THESE LOCATIONS. SEE SA-166.

3. LOCATION OF ADJUSTMENT POINT, INSULATORS AND USE OF INSULATED GUY STRAND GUY STRAND SHALL MEET SA-167 REQUIREMENTS.

4. OUTSIDE PULLOFFS ARE SHOWN FOR CURVE SEGMENTS, INSIDE PULLOFFS ARE SIMILAR. INSIDE PULLOFFS ARE SHOWN FOR SWITCHES, OUTSIDE PULLOFFS ARE SIMILAR.

5. TROLLEY WIRE TO STRUCTURAL ATTACHMENT DISTANCE DETERMINES IF A SHORT, MEDIUM OR LONG VERSION IS USED FOR SA-371 A THROUGH SA-371 E.

6. TROLLEY WIRE GEOMETRY AS SHOWN ON THE OVERHEAD DRAWINGS DETERMINES WHICH SA-371 A THROUGH SA-371 K TO USE.

MATERIAL LIST

ITEM #	QTY	DESCRIPTION	MANUFACTURER	CAT. NO.
06	AS REQD	FRICTION TAPE, 3/4" (6 WRAPS)		
09	*	BULL RING	WABCO	18567-2000
11	*	7/8 TRANSLITE STRAIN INSUL CL-CL	WABCO	54975-6120
12	*	7/8 TRANSLITE STRAIN INSUL CL-EYE	WABCO	55339-6120
102	VARIES	FORGED THREE-PIECE ADJUSTABLE POLE BAND, ANNEALED & GALVANIZED	KORTICK MFG CO	
103	VARIES	WOOD POLE EYEBOLT	METRO STD	SA-103
	GUY TENSIONS- 0-2700 LBS			
03	*	GUY STRAIN INSUL	PORCELAIN PRODUCTS CO.	504
04	*	GUY GRIP DEADEND	PREFORMED	CDE-3106
05	*	WIRE ROPE CLIP, 5/16"	CROSBY	G450
07	*	THIMBLE, 3/8" XHD, OPEN	CROSBY	G414
08	VARIES	GUY STRAND	COPPERWELD	8M
	GUY TENSIONS- 2700-5000 LBS			
13	*	GUY STRAIN INSUL	PORCELAIN PRODUCTS CO.	506
14	*	GUY GRIP DEADEND	PREFORMED	CDE-3115
15	*	WIRE ROPE CLIP, 3/8"	CROSBY	G450
16	VARIES	GUY STRAND	COPPERWELD	16M
17	*	THIMBLE, 1/2" XHD, OPEN	CROSBY	G414
43	*	7/8 TRANSLITE STRAIN INSUL CL-CL	WABCO	56273-6120
48	*	Y CLEVIS EYE CONNECTION	LINE HARDWARE	YCE-30

DESIGNED DPG	CHKD: DOW	King County	DEPARTMENT OF TRANSPORTATION TROLLEY STANDARDS	DATE: OCT 95
DR: TMB	SCALE: NONE			FILE
RECOM.	CONTRACT:		SWITCH & CURVE SEGMENT PULLOFFS	DWG. NO. SA-371
APPROVED				SHT 2 OF 9

V:\Library & Standards\Standards\Trolley\Details\SA-371.1-9.dwg, SA-371.2, 1/5/2007 12:33:01 PM

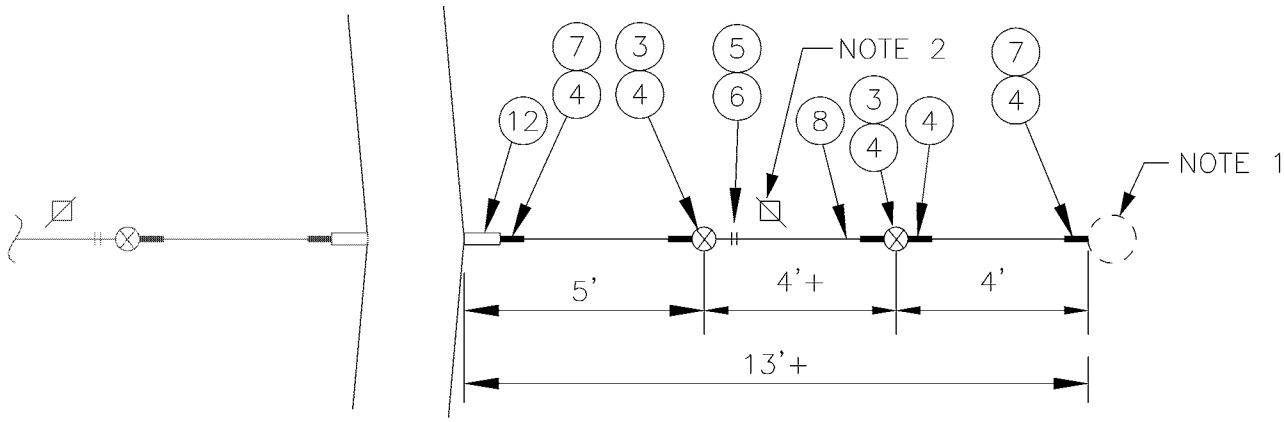

SA–371 A (LONG)

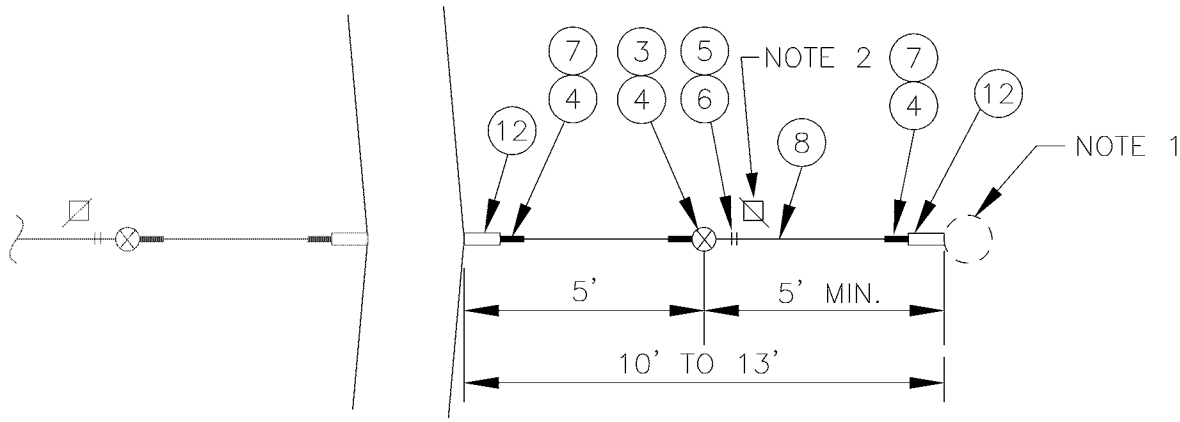

SA–371 A (MEDIUM)

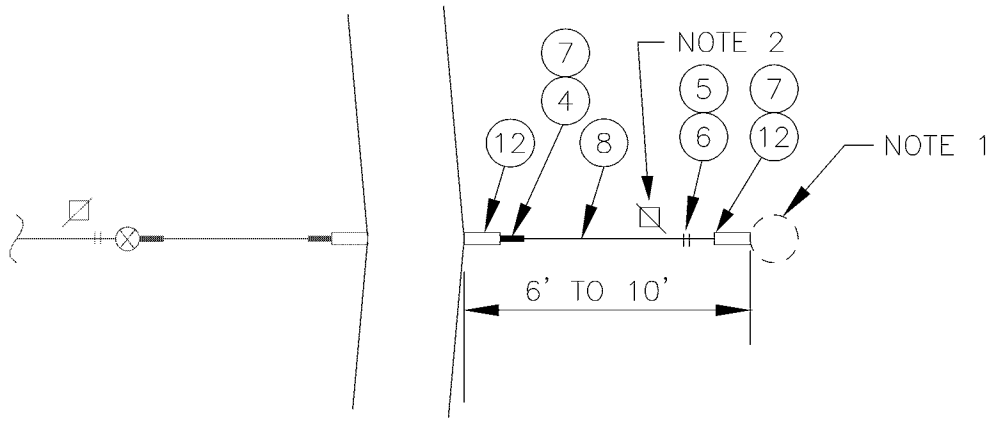

SA–371 A (SHORT)

DESIGNED DPG	CHKD: DOW	King County	DEPARTMENT OF TRANSPORTATION TROLLEY STANDARDS	DATE: JUN 95
DR: TMB	SCALE:		CURVE SEGMENT PULLOFFS	FILE
RECOM.	CONTRACT:			DWG. NO. SA–371
APPROVED				SHT 3 OF 9

V:\Library & Standards\Standards\Trolley\Details\SA-371.1-9.dwg, SA-371.3, 1/5/2007 12:33:08 PM

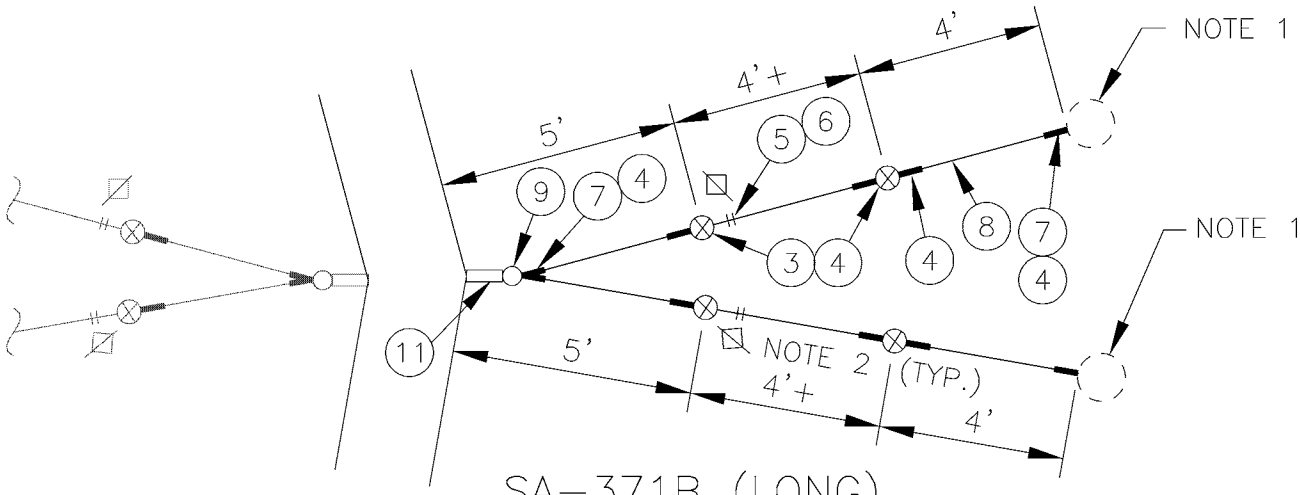

SA–371B (LONG)

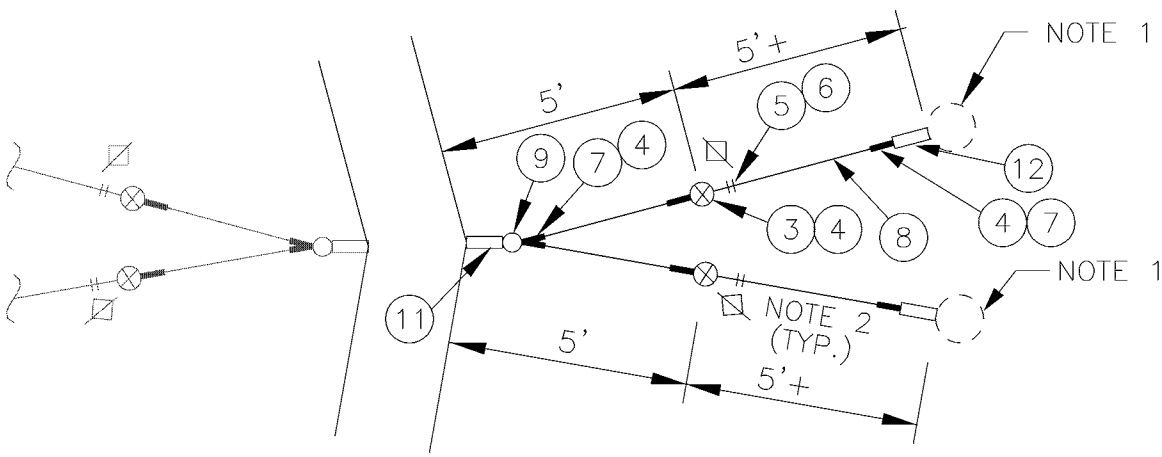

SA–371B (MEDIUM)

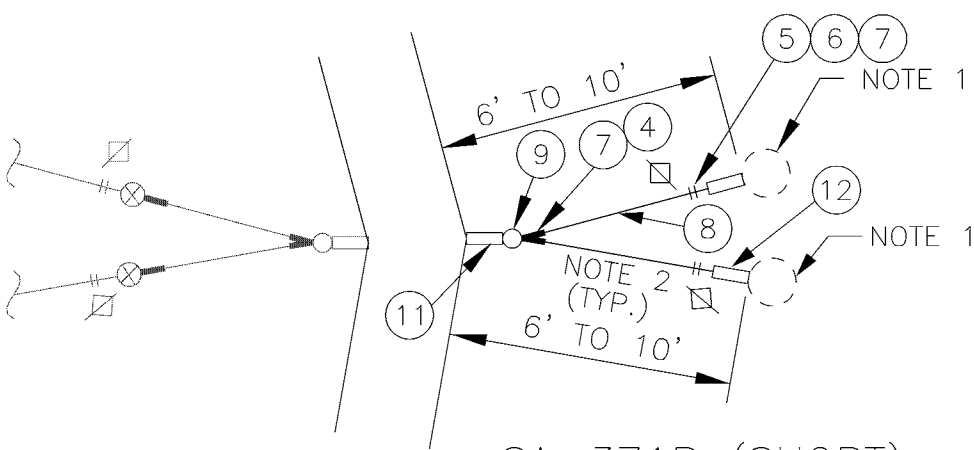

SA–371B (SHORT)

DESIGNED DPG	CHKD: DOW	King County	DEPARTMENT OF TRANSPORTATION TROLLEY STANDARDS	DATE: JUN 95
DR: TMB	SCALE: NONE			FILE
RECOM.	CONTRACT:		CURVE SEGMENT PULLOFFS	DWG. NO. SA–371
APPROVED				SHT 4 OF 9

V:\Library & Standards\Standards\Trolley\Details\SA-371.1-9.dwg, SA-371.4, 1/5/2007 12:33:16 PM

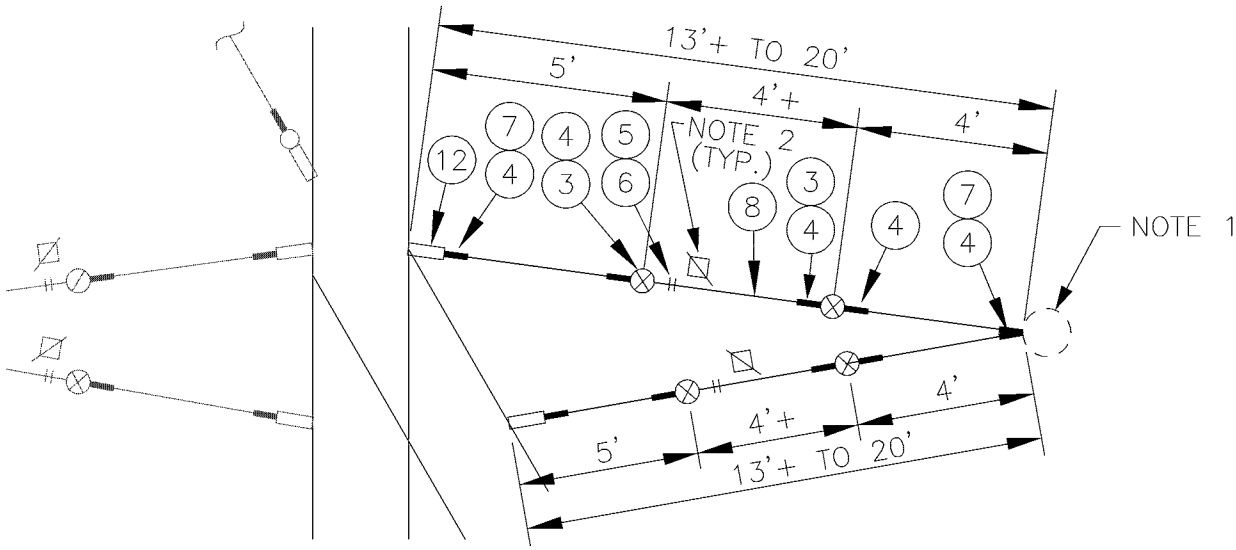

SA–371C (LONG)

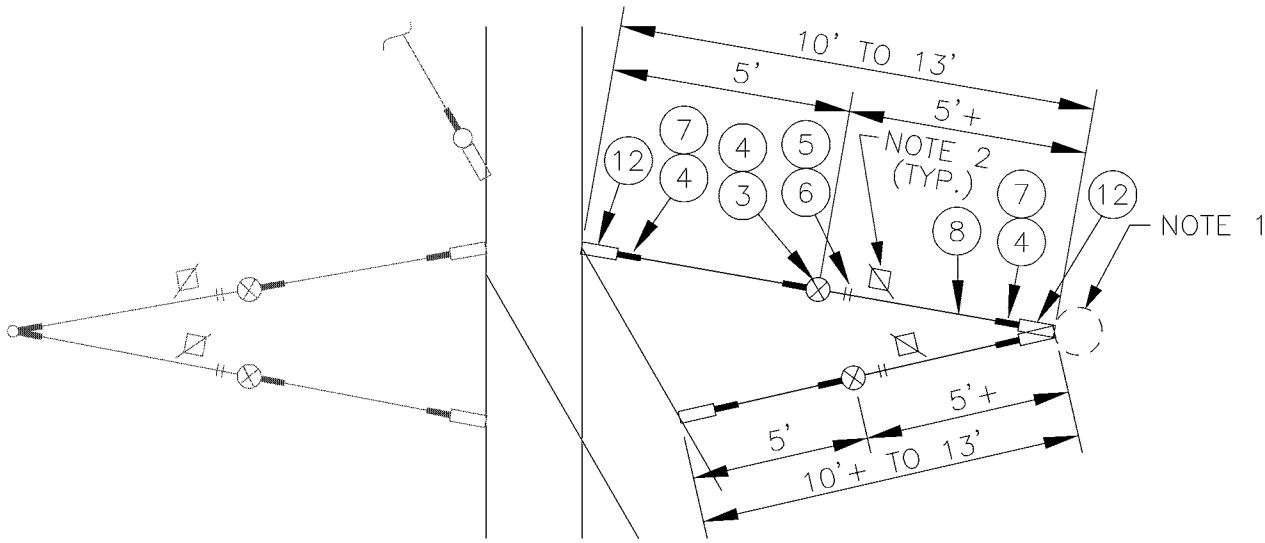

SA–371C (MEDIUM)

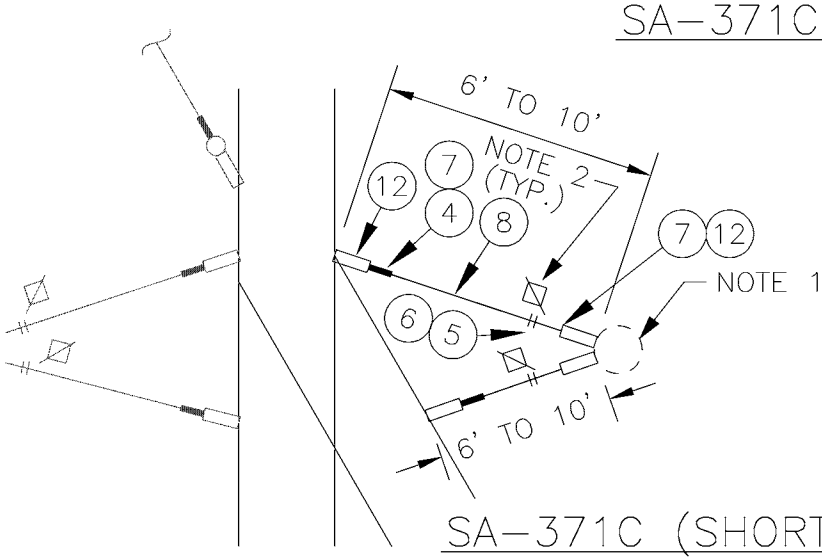

SA–371C (SHORT)

DESIGNED DPG	CHKD: DOW	King County	DEPARTMENT OF TRANSPORTATION TROLLEY STANDARDS	DATE: JUN 95
DR: TMB	SCALE: NONE			FILE
RECOM.	CONTRACT:		SWITCH PULLOFFS	DWG. NO. SA–371
APPROVED				SHT 5 OF 9

V:\Library & Standards\Standards\Trolley\Details\SA-371.1-9.dwg, SA-371.5, 1/5/2007 12:33:23 PM

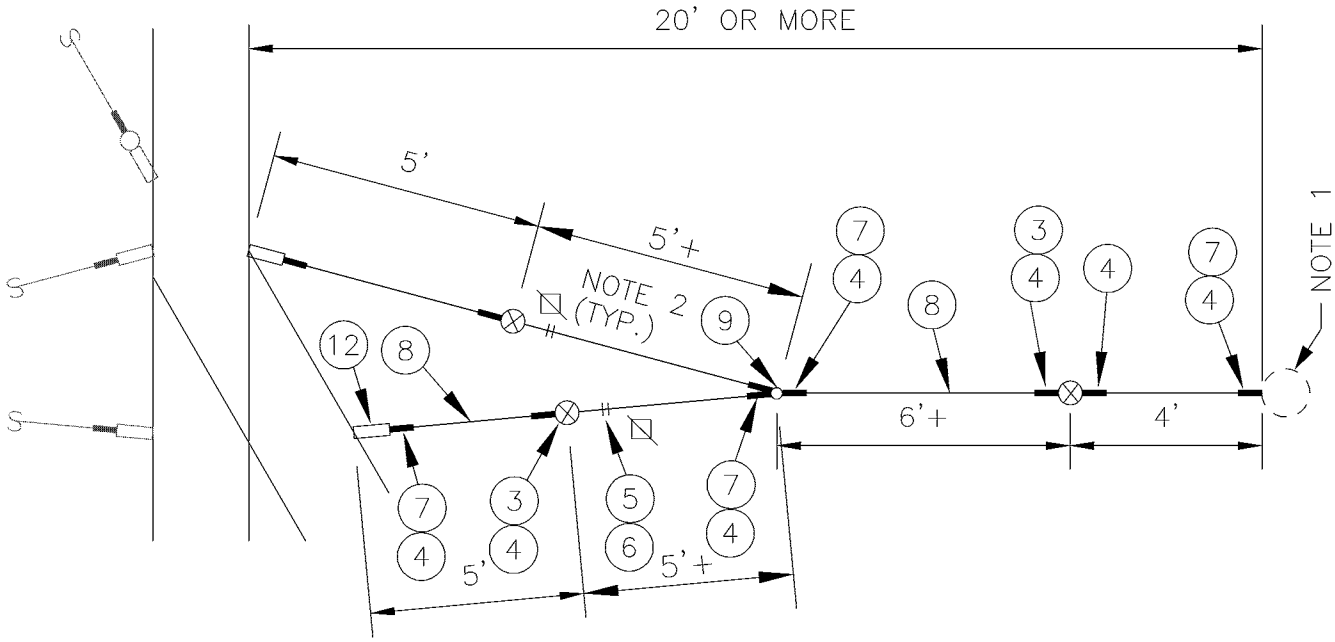

SA–371D

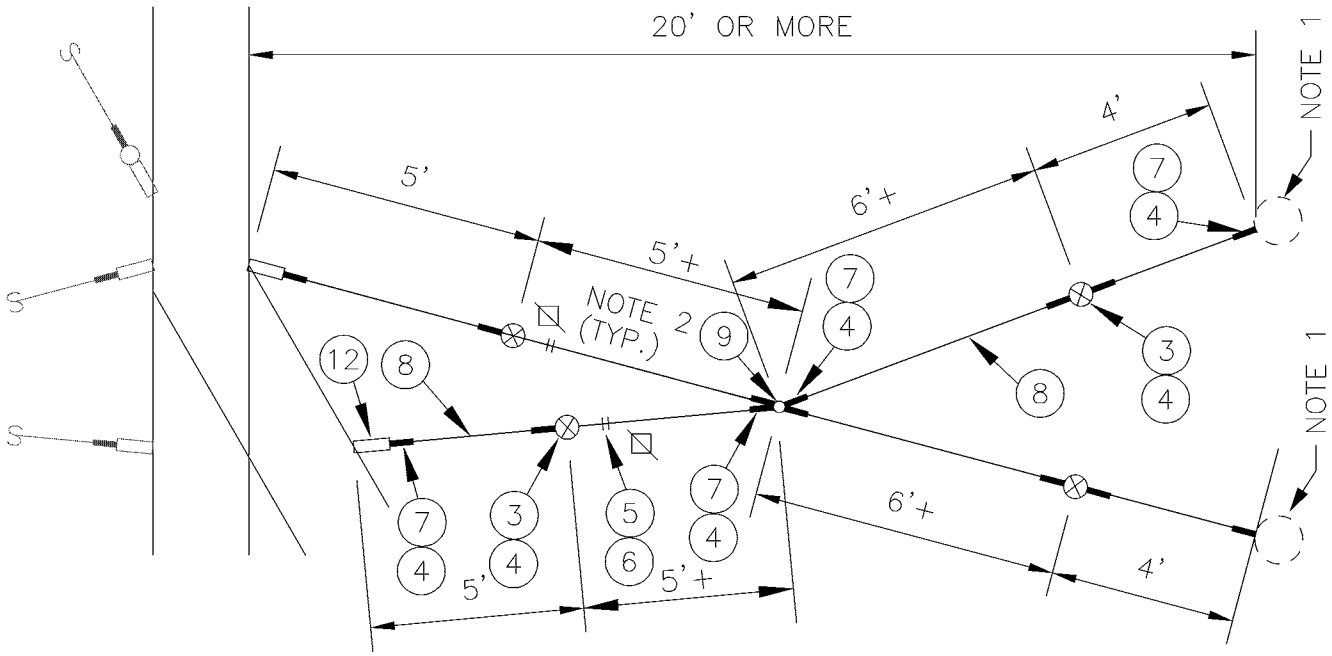

SA–371E

DESIGNED DPG	CHKD: DOW	King County	DEPARTMENT OF TRANSPORTATION TROLLEY STANDARDS	DATE: JUN 95
DR: TMB	SCALE: NONE			FILE
RECOM.	CONTRACT:		SWITCH PULLOFFS	DWG. NO. SA–371
APPROVED				SHT 6 OF 9

V:\Library & Standards\Standards\Trolley\Details\SA-371.1-9.dwg, SA-371.6, 1/5/2007 12:33:30 PM

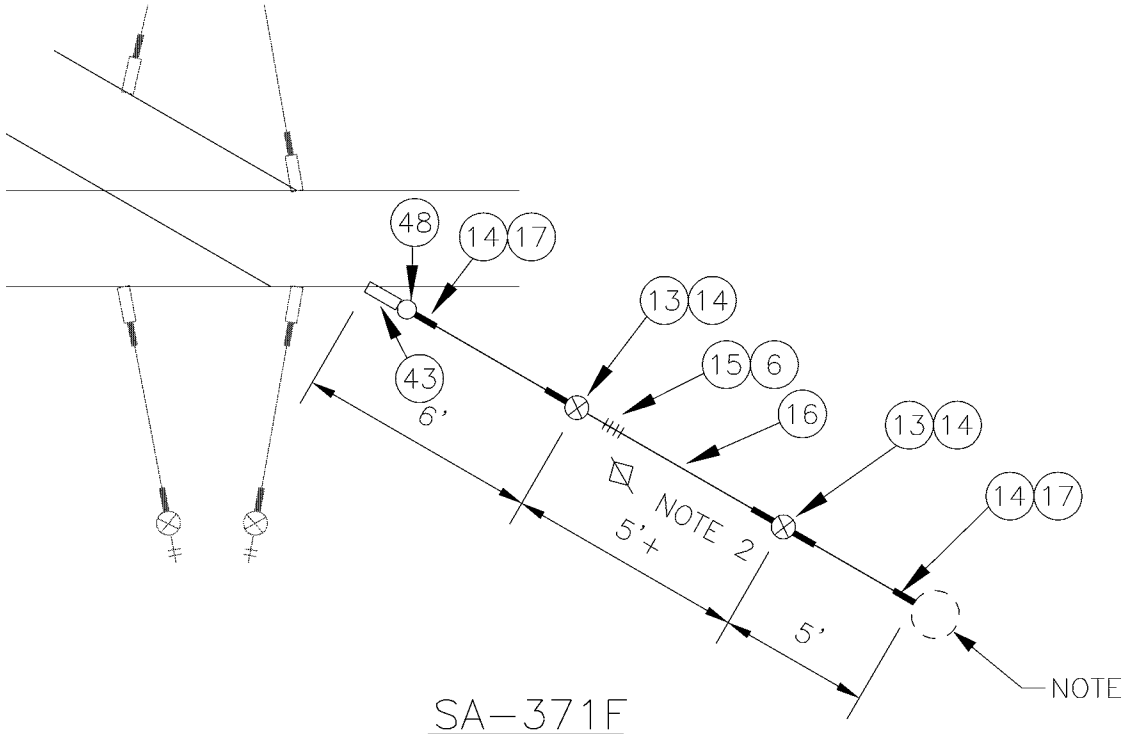

SA–371F

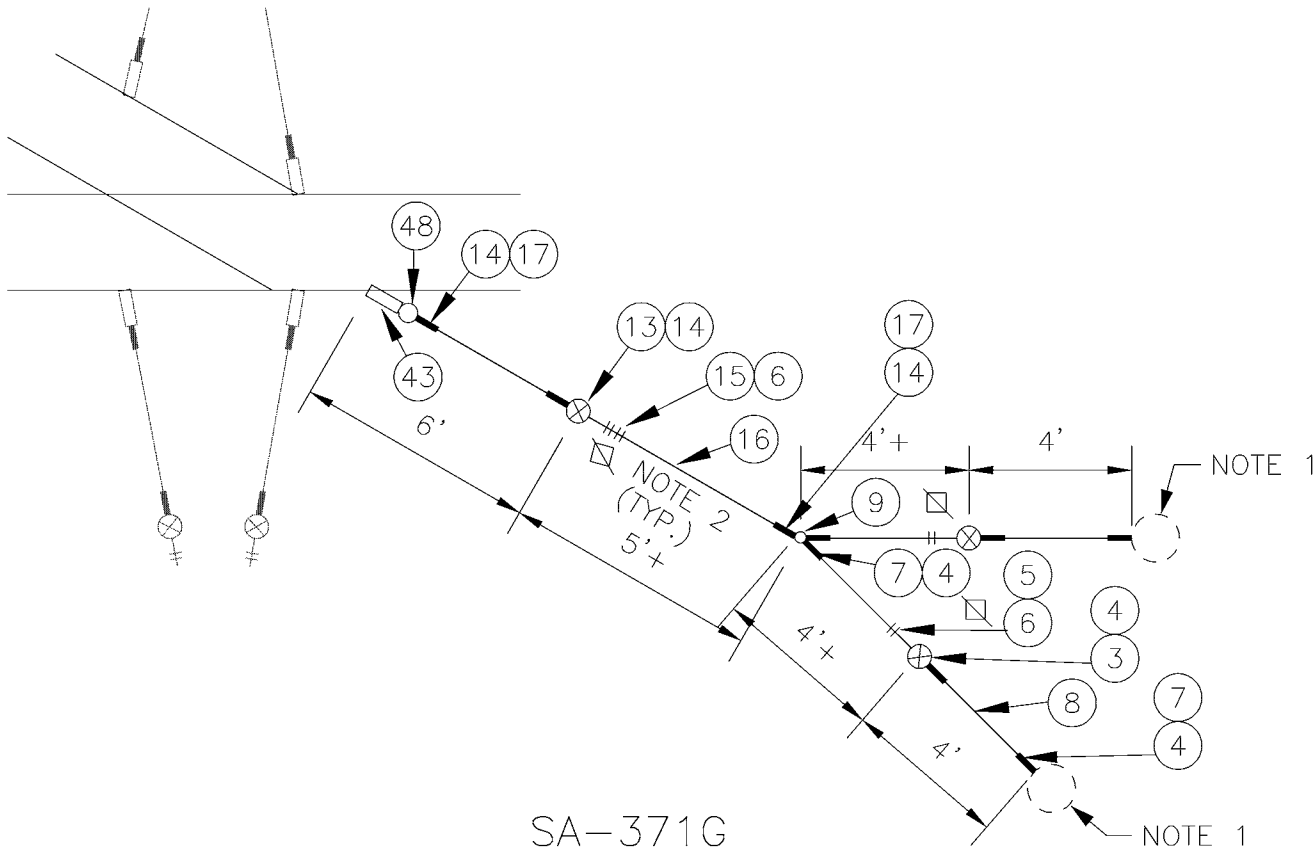

SA–371G

DESIGNED DPG	CHKD: DOW	King County	DEPARTMENT OF TRANSPORTATION TROLLEY STANDARDS	DATE: JUN 95
DR: TMB	SCALE: NONE			FILE
RECOM.	CONTRACT:		SWITCH PULLOFFS	DWG. NO. SA–371
APPROVED				SHT 7 OF 9

V:\Library & Standards\Standards\Trolley\Details\SA-371.1-9.dwg, SA-371.7, 1/5/2007 12:33:37 PM

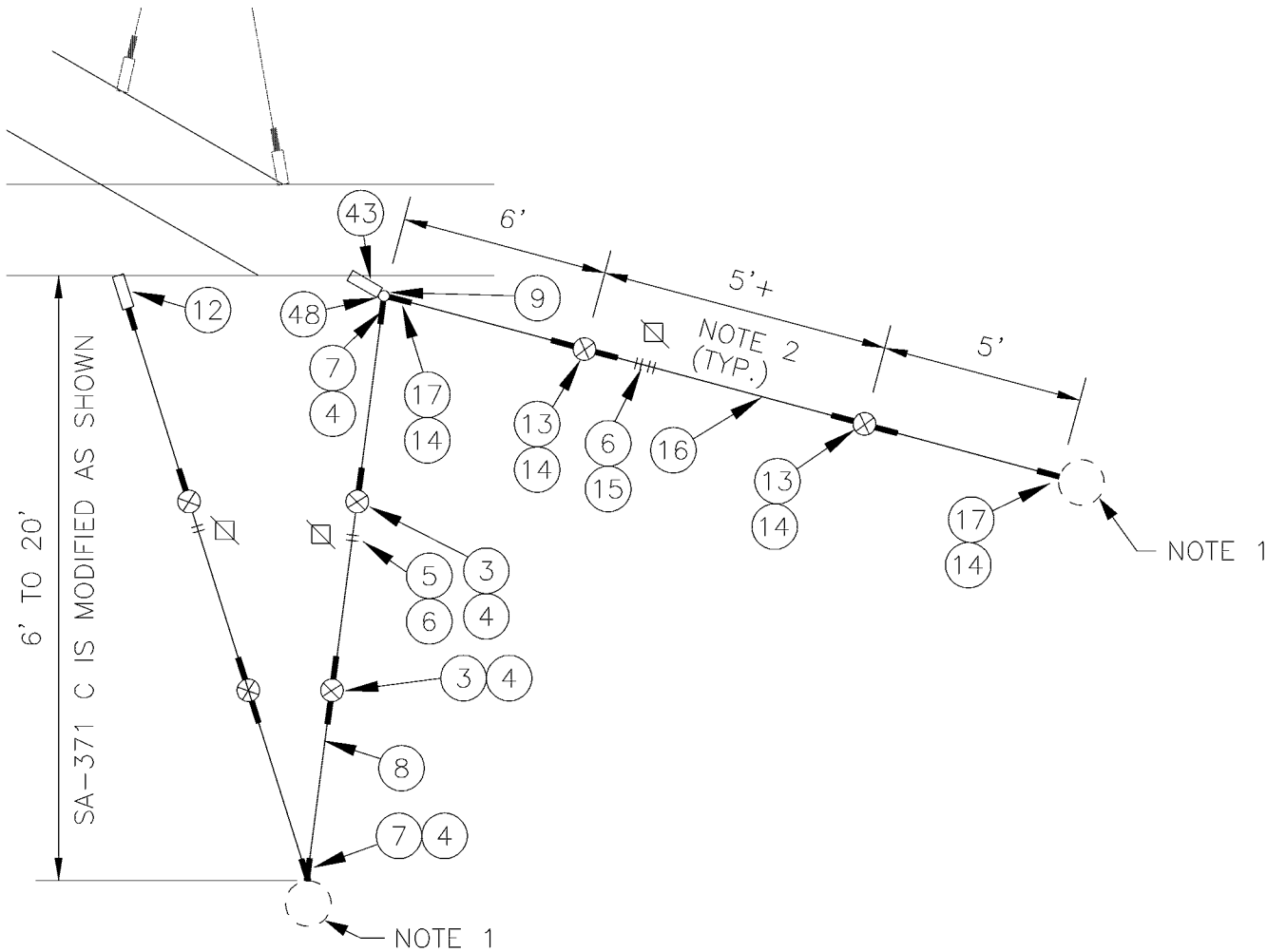

SA-371H

DESIGNED DPG	CHKD: DOW	King County	DEPARTMENT OF TRANSPORTATION TROLLEY STANDARDS	DATE: JUN 95
DR: TMB	SCALE: NONE			FILE
RECOM.	CONTRACT:		SWITCH PULLOFFS	DWG. NO. SA-371
APPROVED				SHT 8 OF 9

V:\Library & Standards\Standards\Trolley\Details\SA-371.1-9.dwg, SA-371.8, 1/5/2007 12:33:45 PM

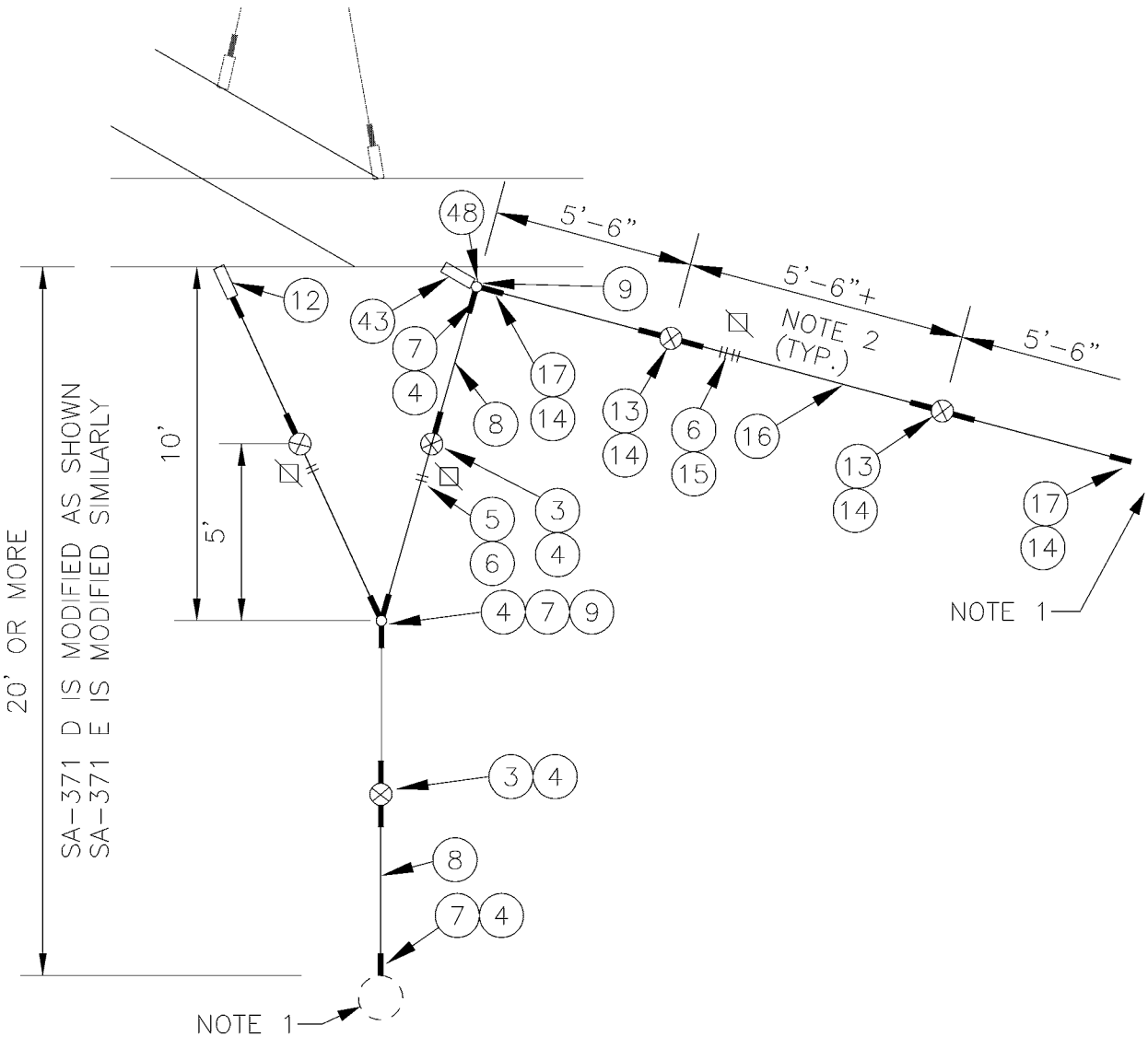

SA-371J

DESIGNED DPG	CHKD: DOW	King County	DEPARTMENT OF TRANSPORTATION TROLLEY STANDARDS	DATE: JUN 95
DR: TMB	SCALE: NONE			FILE
RECOM.	CONTRACT:		SWITCH PULLOFFS	DWG. NO. SA-371
APPROVED				SHT 9 OF 9

V:\Library & Standards\Standards\Trolley\Details\SA-371.1-9.dwg, SA-371.9, 1/5/2007 12:33:52 PM

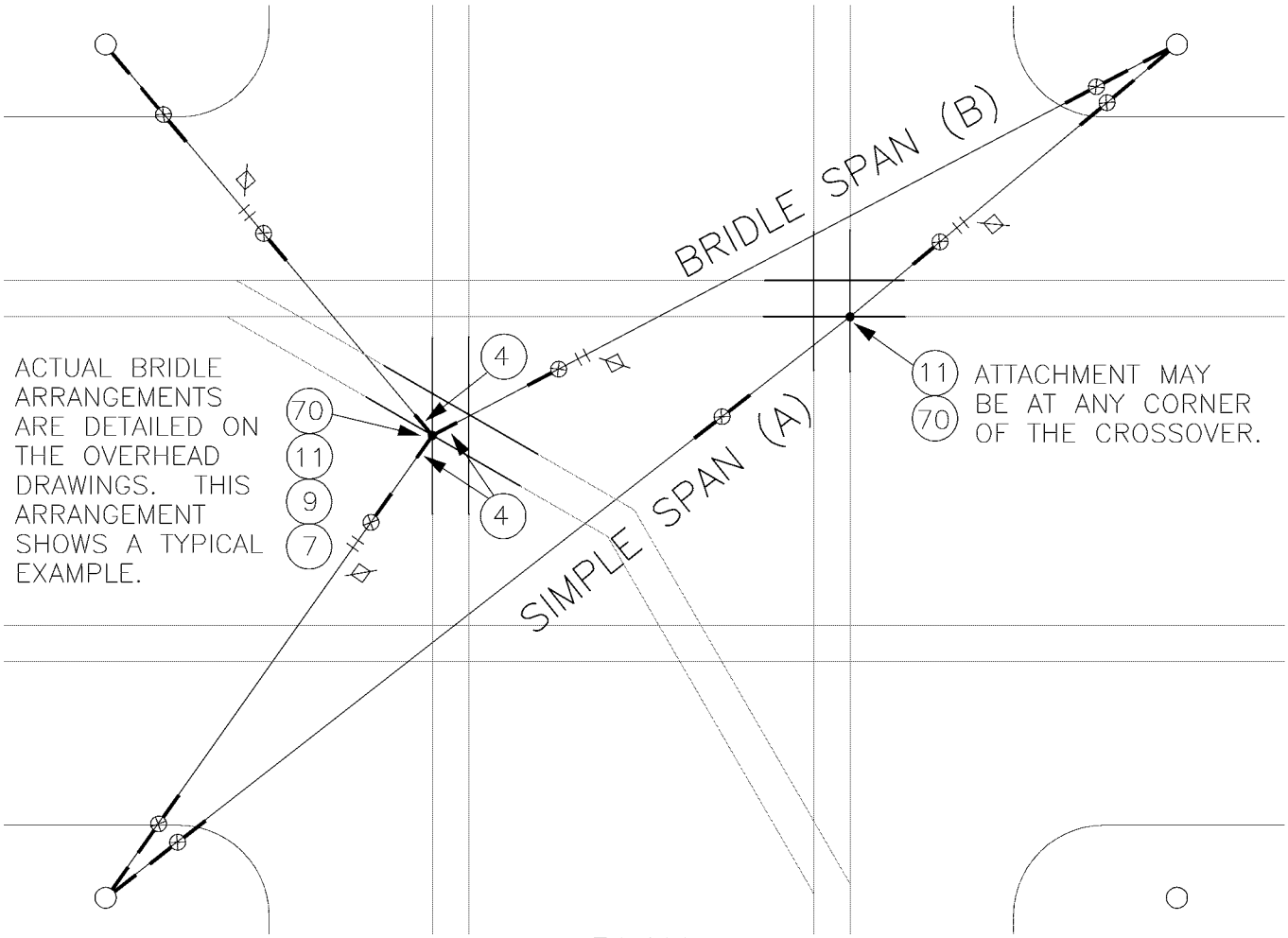

PLAN

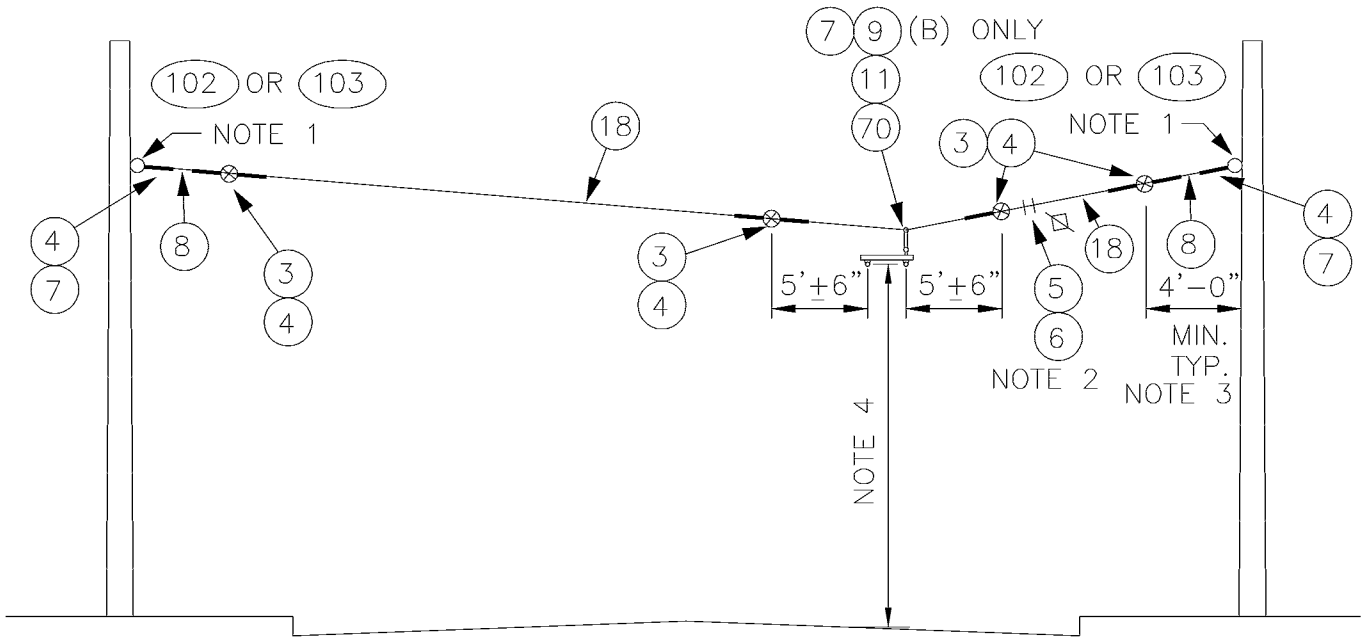

DESIGNED DPG	CHKD: DOW	King County	DEPARTMENT OF TRANSPORTATION TROLLEY STANDARDS	DATE: JUN 95
DR: TMB	SCALE: NONE			FILE
RECOM.	CONTRACT:		CROSSOVER HOLDUP SIMPLE SPAN (A) BRIDLE SPAN (B)	DWG. NO. SA–372
APPROVED				SHT 1 OF 2

V:\Library & Standards\Standards\Trolley\Details\SA-372.1-2.dwg, SA-372.1, 1/5/2007 12:34:02 PM

NOTES

1. A POLE COLLAR OR POLE EYEBOLT IS REQUIRED PER SA-102 OR SA-103 UNLESS A BUILDING EYEBOLT ATTACHMENT IS USED. INSTALLATION HEIGHT IS INDICATED ON THE OVERHEAD DRAWINGS.
2. PROVIDE TENSION ADJUSTMENT POINTS AT LOCATIONS INDICATED BY "⊠". PROVIDE WIRE ROPE CLIPS AT THESE LOCATIONS. SEE SA-166.
3. SEE SA-370 FOR LIMITED SPACE VARIANCES. SEE SA-167 FOR INSULATED GUY CRITERIA.
4. SEE SA-164 FOR VERTICAL & HORIZONTAL DIMENSIONS TO TROLLEY WIRE.

MATERIAL LIST (A)

ITEM #	QTY	DESCRIPTION	MANUFACTURER	CAT. NO.
03	4	GUY STRAIN INSUL	PORCELAIN PRODUCTS CO.	504
04	9	GUY GRIP DEADEND	PREFORMED	CDE-3106
05	2	WIRE ROPE CLIP, 5/16"	CROSBY	G450
06	AS REQD	FRICTION TAPE, 3/4" (6 WRAPS)		
07	2	THIMBLE, 3/8" XHD, OPEN	CROSBY	G414
08	VARIES	GUY STRAND	COPPERWELD	8M
11	1	7/8 TRANSLITE STRAIN INSUL CL-CL	WABCO	54975-6120
18	VARIES	GUY STRAND, COVERED	COPPERWELD	8MI
70	1	EYEBOLT, 5/8" X 6" W/2 NUTS & LOCKWASHER		
102	VARIES	FORGED THREE-PIECE ADJUSTABLE POLE BAND, ANNEALED & GALVANIZED	KORTICK MFG CO	
103	VARIES	WOOD POLE EYEBOLT	METRO STD	SA-103

MATERIAL LIST (B)

ITEM #	QTY	DESCRIPTION	MANUFACTURER	CAT. NO.
03	6	GUY STRAIN INSUL	PORCELAIN PRODUCTS CO.	504
04	15	GUY GRIP DEADEND	PREFORMED	CDE-3106
05	6	WIRE ROPE CLIP, 5/16"	CROSBY	G450
06	AS REQD	FRICTION TAPE, 3/4" (6 WRAPS)		
07	6	THIMBLE, 3/8" XHD, OPEN	CROSBY	G414
08	VARIES	GUY STRAND	COPPERWELD	8M
09	1	BULL RING	WABCO	18567-2000
11	1	7/8 TRANSLITE STRAIN INSUL CL-CL	WABCO	54975-6120
18	VARIES	GUY STRAND, COVERED	COPPERWELD	8MI
70	1	EYEBOLT, 5/8" X 6" W/2 NUTS & LOCKWASHER		
102	VARIES	FORGED THREE-PIECE ADJUSTABLE POLE BAND, ANNEALED & GALVANIZED	KORTICK MFG CO	
103	VARIES	WOOD POLE EYEBOLT	METRO STD	SA-103

DESIGNED: DPG	CHKD: DOW	King County	DEPARTMENT OF TRANSPORTATION TROLLEY STANDARDS	DATE: OCT 95
DR: TMB	SCALE: NONE		CROSSOVER HOLDUP SPAN NOTES & MATERIAL	FILE
RECOM.	CONTRACT:			DWG. NO. SA-372
APPROVED				SHT 2 OF 2

V:\Library & Standards\Standards\Trolley\Details\SA-372.1-2.dwg, SA-372.2, 1/5/2007 12:34:10 PM

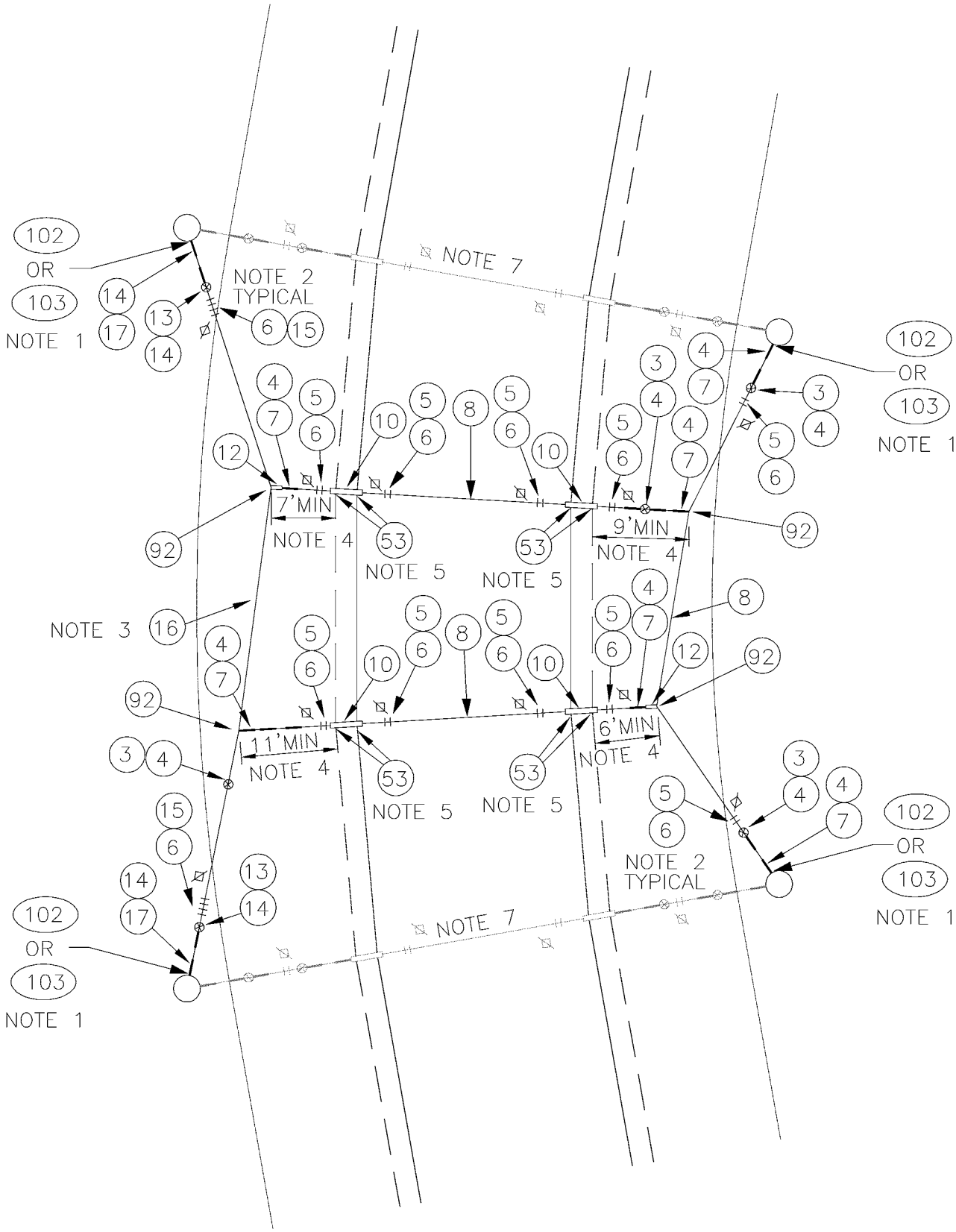

MULTI RAIL CURVE TWO WAY TRAFFIC

DESIGNED DPG	CHKD: DPG	King County	DEPARTMENT OF TRANSPORTATION TROLLEY STANDARDS	DATE: MAY 97
DR: DOW	SCALE: NONE			FILE
RECOM.	CONTRACT:		CONVENTIONAL CURVE WITH CURVE RAILS	DWG. NO. SA-373
APPROVED				SHT 1 OF 4

V:\Library & Standards\Standards\Trolley\Details\SA-373.1-4.dwg, SA-373.1, 1/5/2007 12:34:20 PM

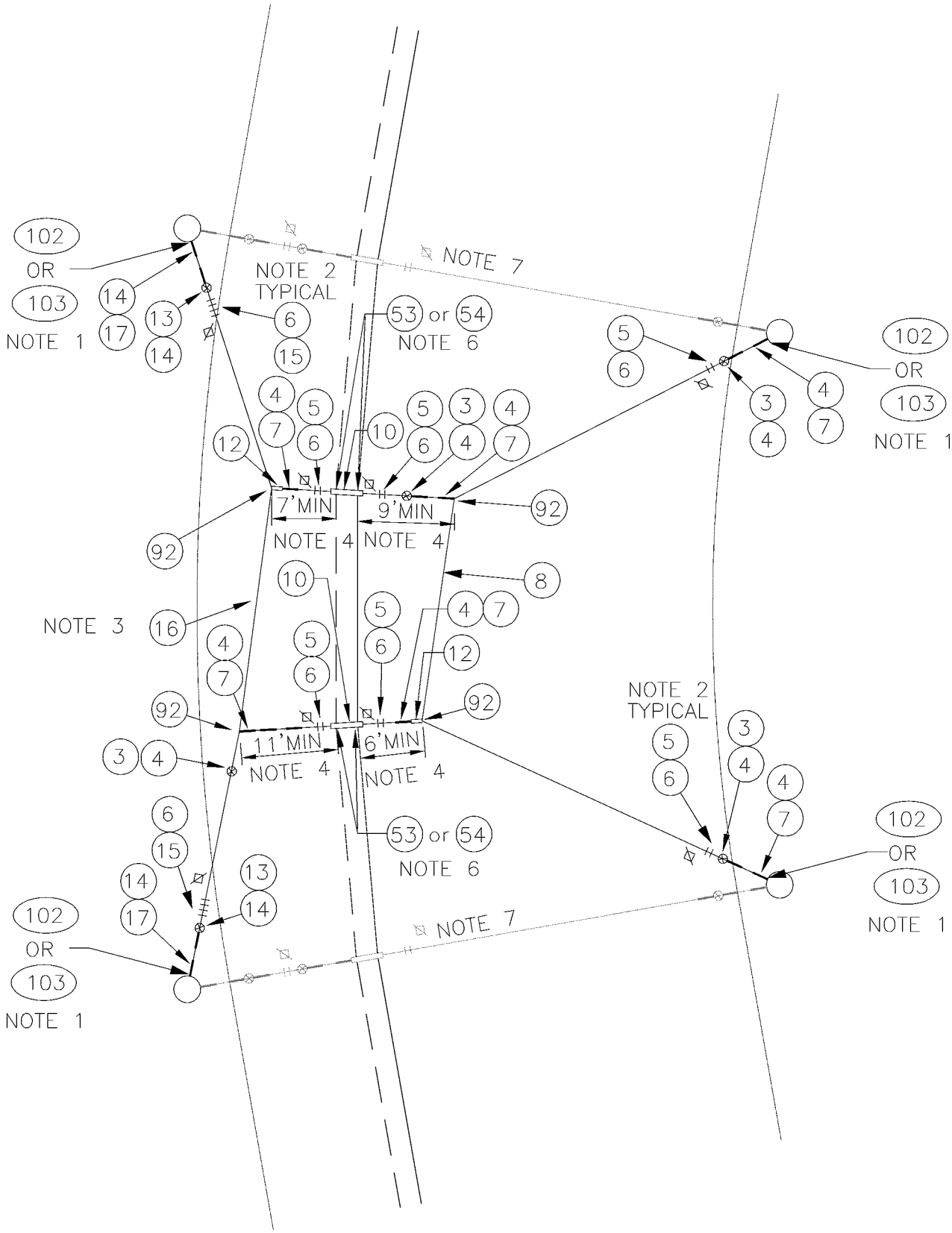

MULTI RAIL CURVE ONE WAY TRAFFIC

DESIGNED DPG	CHKD: DPG	King County	DEPARTMENT OF TRANSPORTATION TROLLEY STANDARDS	DATE: MAY 97
DR: DOW	SCALE: NONE		CONVENTIONAL CURVE WITH CURVE RAILS	FILE
RECOM.	CONTRACT:			DWG. NO. SA-373
APPROVED				SHT 2 OF 4

V:\Library & Standards\Standards\Trolley\Details\SA-373.1-4.dwg, SA-373.2, 1/5/2007 12:34:27 PM

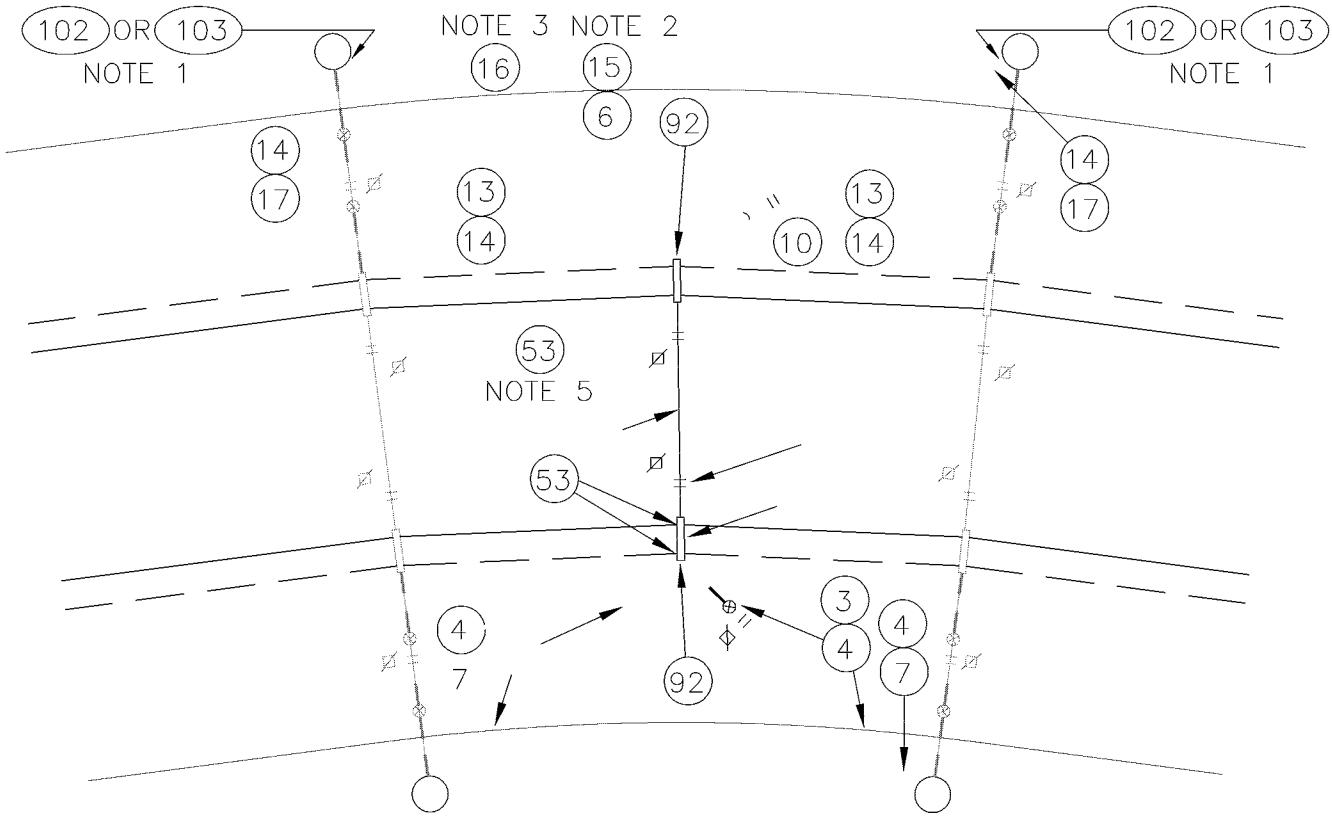

SINGLE CURVE RAIL TWO WAY TRAFFIC

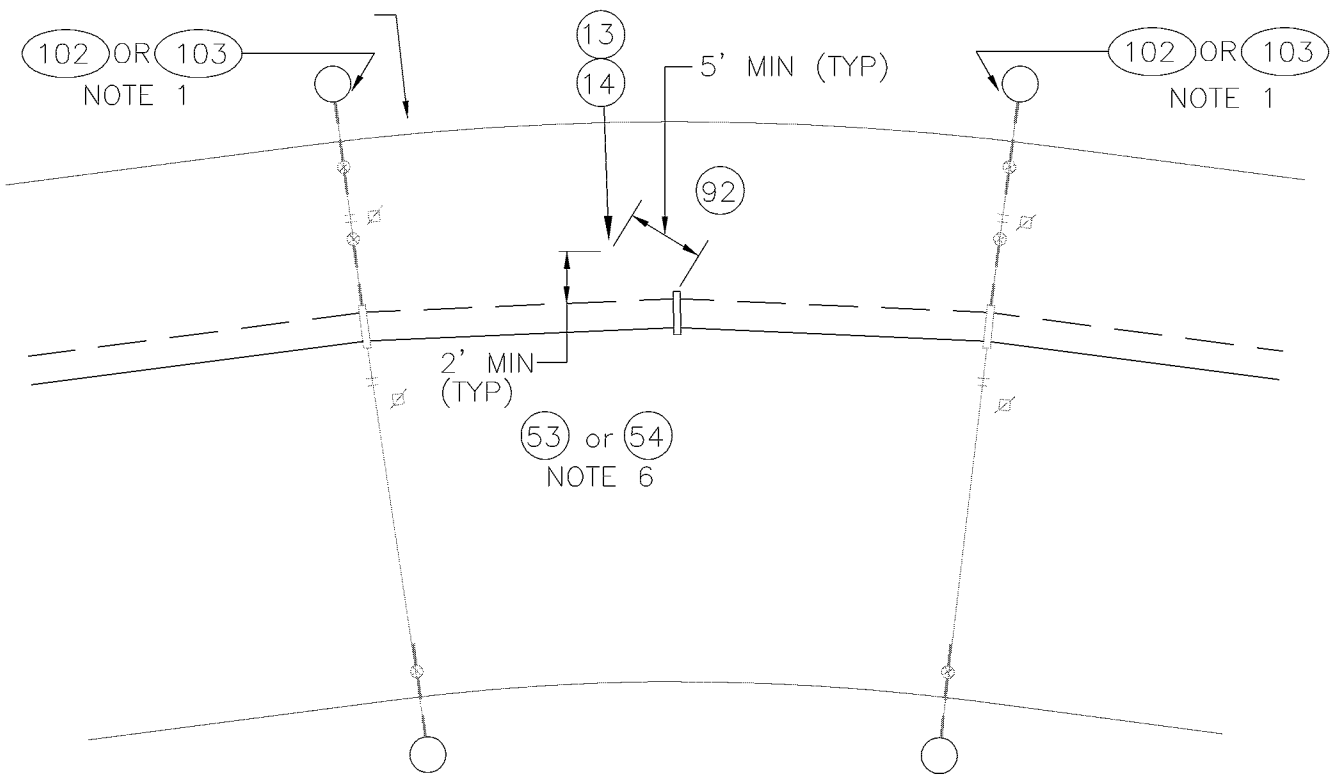

SINGLE CURVE RAIL ONE WAY TRAFFIC

DESIGNED DPG	CHKD: DPG	King County	DEPARTMENT OF TRANSPORTATION TROLLEY STANDARDS	DATE: JUN 95
DR: DOW	SCALE: NONE		CONVENTIONAL CURVE WITH CURVE RAILS	FILE
RECOM.	CONTRACT:			DWG. NO. SA-373
APPROVED				SHT 3 OF 4

V:\Library & Standards\Standards\Trolley\Details\SA-373.1-4.dwg, SA-373.3, 1/5/2007 12:34:35 PM

MATERIAL LIST

ITEM #	QTY	DESCRIPTION	MANUFACTURER	CAT. NO.
03	VARIES	GUY STRAIN INSUL	PORCELAIN PRODUCTS CO.	504
04	VARIES	GUY GRIP DEADEND	PREFORMED	CDE-3106
05	VARIES	WIRE ROPE CLIP, 5/16"	CROSBY	G450
06	AS REQD	FRICTION TAPE, 3/4" (6 WRAPS)		
07	VARIES	THIMBLE, 3/8" XHD, OPEN	CROSBY	G414
08	VARIES	GUY STRAND	COPPERWELD	8M
10	VARIES	HI-LITE DOUBLE CURVE HANGER	WABCO	54962-3001
12	VARIES	7/8 TRANSLITE STRAIN INSUL CL-EYE	WABCO	55339-6120
13	VARIES	GUY STRAIN INSUL	PORCELAIN PRODUCTS CO.	506
14	VARIES	GUY GRIP DEADEND	PREFORMED	CDE-3115
15	VARIES	WIRE ROPE CLIP, 3/8"	CROSBY	G450
16	VARIES	GUY STRAND	COPPERWELD	16M
17	VARIES	THIMBLE, 1/2" XHD, OPEN	CROSBY	G414
53	VARIES	CURVE RAIL (1° TO 5° 2 FT LG)	K & M	851 B412/0
54	VARIES	CURVE RAIL (>5° TO 7.5° 4 FT LG)	K & M	851 B412/1
92	VARIES	ANGLE CLAMP, DUCTILE IRON	ANDERSON/ SQUARE D	82860-2000
102	VARIES	FORGED THREE-PIECE ADJUSTABLE POLE BAND, ANNEALED & GALVANIZED	KORTICK MFG CO	
103	VARIES	WOOD POLE EYEBOLT	METRO STD	SA-103

NOTES

1. A POLE COLLAR OR POLE EYEBOLT IS REQUIRED PER SA-102 OR SA-103 UNLESS A BUILDING EYEBOLT ATTACHMENT IS USED. INSTALLATION HEIGHT IS INDICATED ON THE OVERHEAD DRAWINGS.
2. PROVIDE TENSION ADJUSTMENT POINTS AT LOCATIONS INDICATED BY "⊠". PROVIDE WIRE ROPE CLIPS AT THESE LOCATIONS. SEE SA-166.
3. IF LOAD SHOWN ON OVERHEAD DRAWINGS IS LESS THAN 2500 LBS, THEN ITEM 8 MAY BE USED INSTEAD OF ITEM 16. THE ASSOCIATED ITEMS SHALL ALSO BE CHANGED I.E. 3 FOR 13, 4 FOR 14, 5 FOR 15 AND 7 FOR 17.
4. THE DISTANCE FROM THE TROLLEY WIRE TO THE SUPPORT CATENARY WIRE SHALL BE AS SHOWN ON THE OVERHEAD DRAWINGS. THE DISTANCES ON SA-373 ARE SHOWN TO DEFINE PARTS REQUIRED FOR DISTANCE RANGES ONLY.
5. ANGLE VARIES FROM 1° TO 5°.
6. USE ITEM 53 WHEN ANGLE VARIES FROM 1° TO 5°. USE ITEM 54 WHEN ANGLE VARIES FROM 5° TO 7.5°. TROLLEY WIRE SHALL NOT BE TIED TOGETHER AS SHOWN ON SHEET 1 WHEN USING ITEM 54. USE SHEET 2, IF TWO WAY TROLLEY WIRE USES ITEM 54, AND TREAT EACH TRACK SEPARATELY.
7. END SPAN SHOWN FOR REFERENCE ONLY, ACTUAL SPAN USED SHALL BE DEFINED ON THE OVERHEAD DRAWINGS.

V:\Library & Standards\Standards\Trolley\Details\SA-373.1-4.dwg, SA-373.4, 1/5/2007 12:34:43 PM

DESIGNED: DPG	CHKD: DOW	King County	DEPARTMENT OF TRANSPORTATION TROLLEY STANDARDS	DATE: OCT 95
DRN: TMB	SCALE: NONE		CONVENTIONAL CURVE WITH CURVE RAILS	FILE
RECOM.	CONTRACT:			DWG. NO. SA-373
APPROVED				SHT 4 OF 4

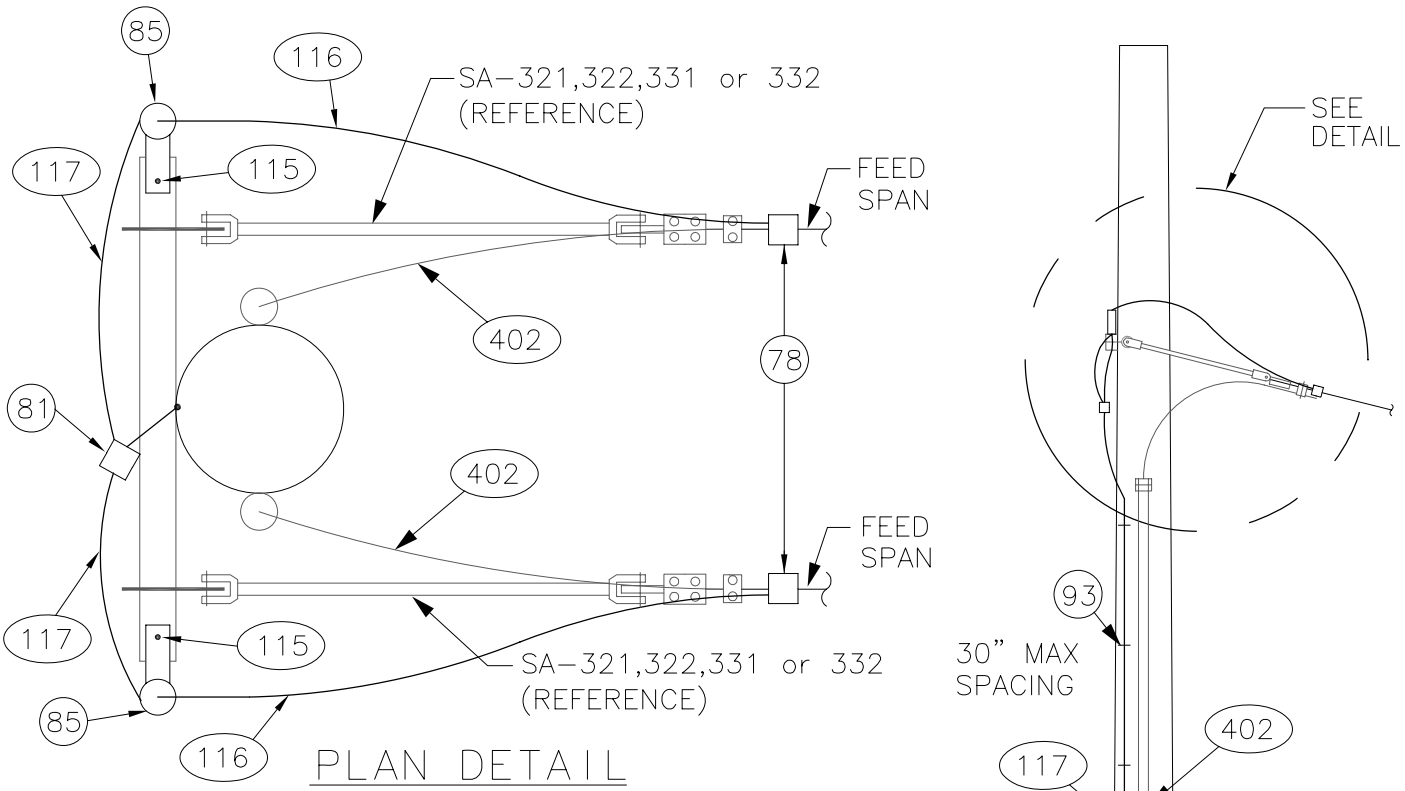

PLAN DETAIL

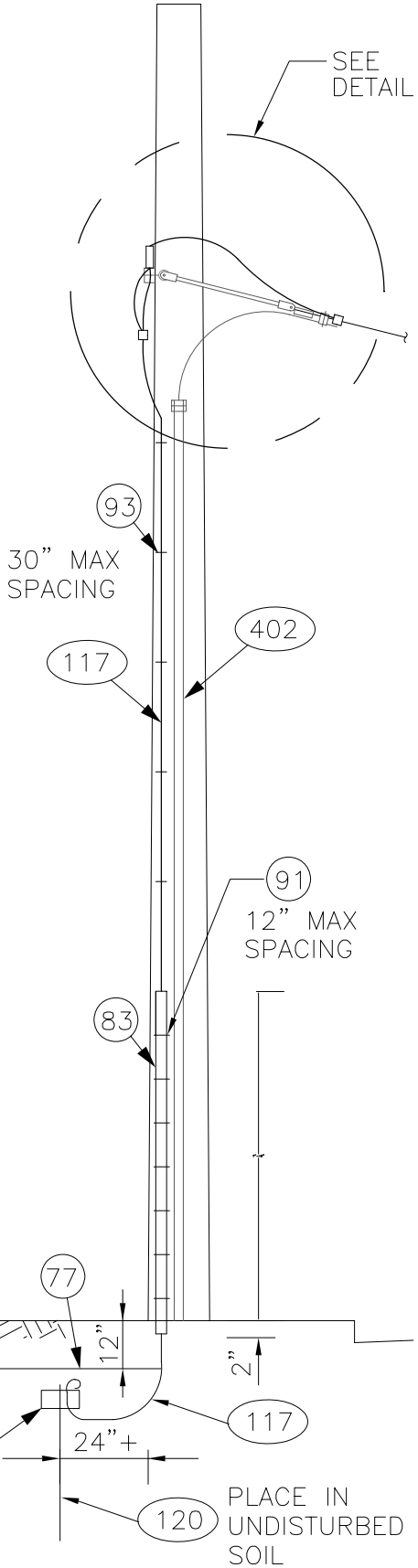

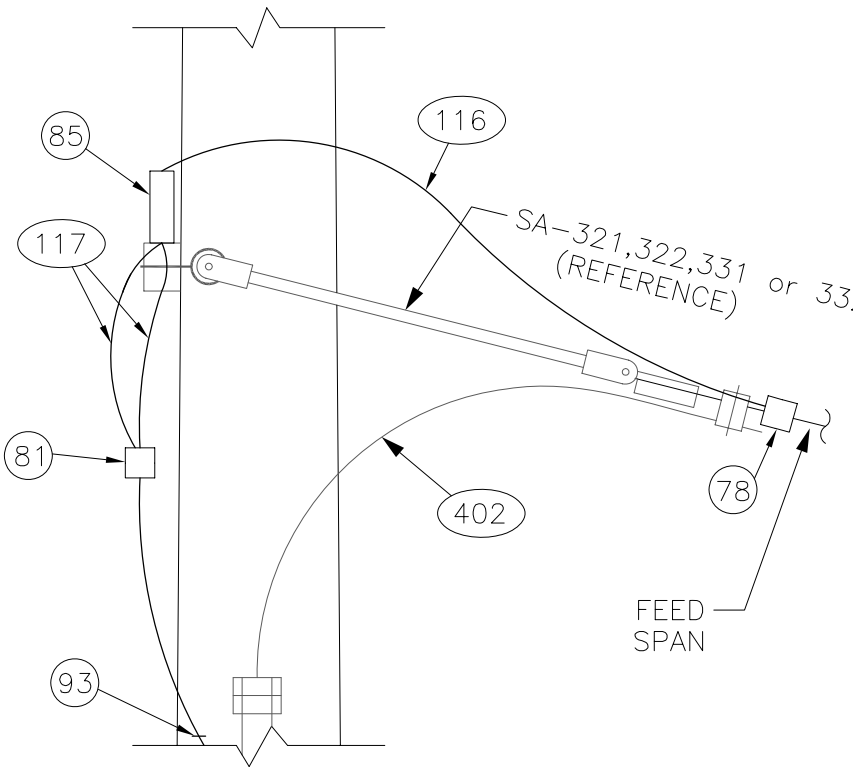

ELEV DETAIL

DESIGNED DPG	CHKD: DOW	King County	DEPARTMENT OF TRANSPORTATION TROLLEY STANDARDS	DATE: FEB 98
DR: MM	SCALE: NONE		LIGHTNING ARRESTERS DOUBLE FEEDER RISER (WOOD POLE)	FILE
RECOM.	CONTRACT:			DWG. NO. SA–401
APPROVED				SHT 1 OF 6

V:\Library & Standards\Working Documents\Trolley\Details\Completed Detail Drawing Files\SA-401.1-6.dwg, SA-401.1, 1/11/2007 9:38:48 AM

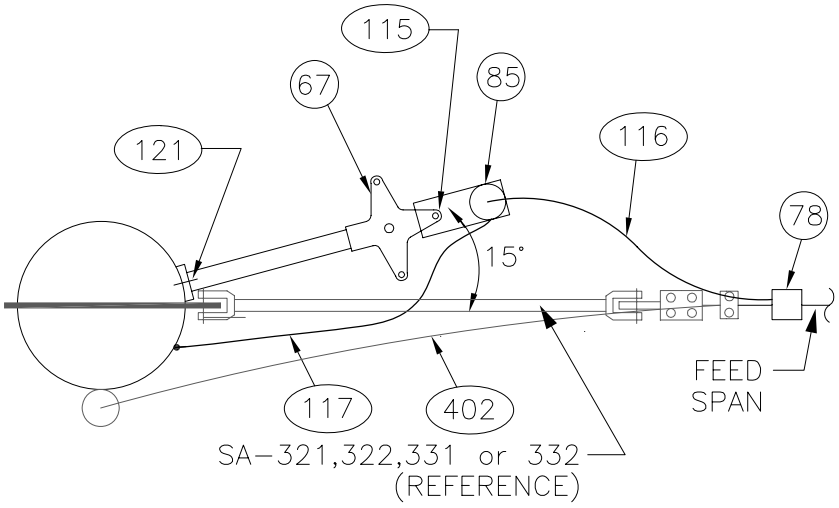

PLAN DETAIL

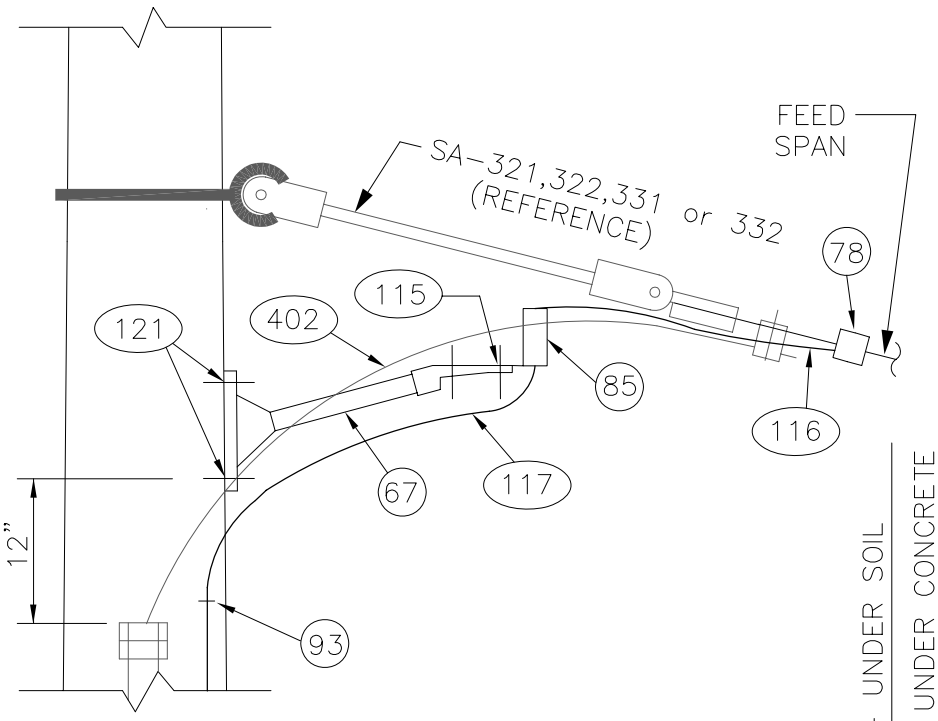

ELEV DETAIL

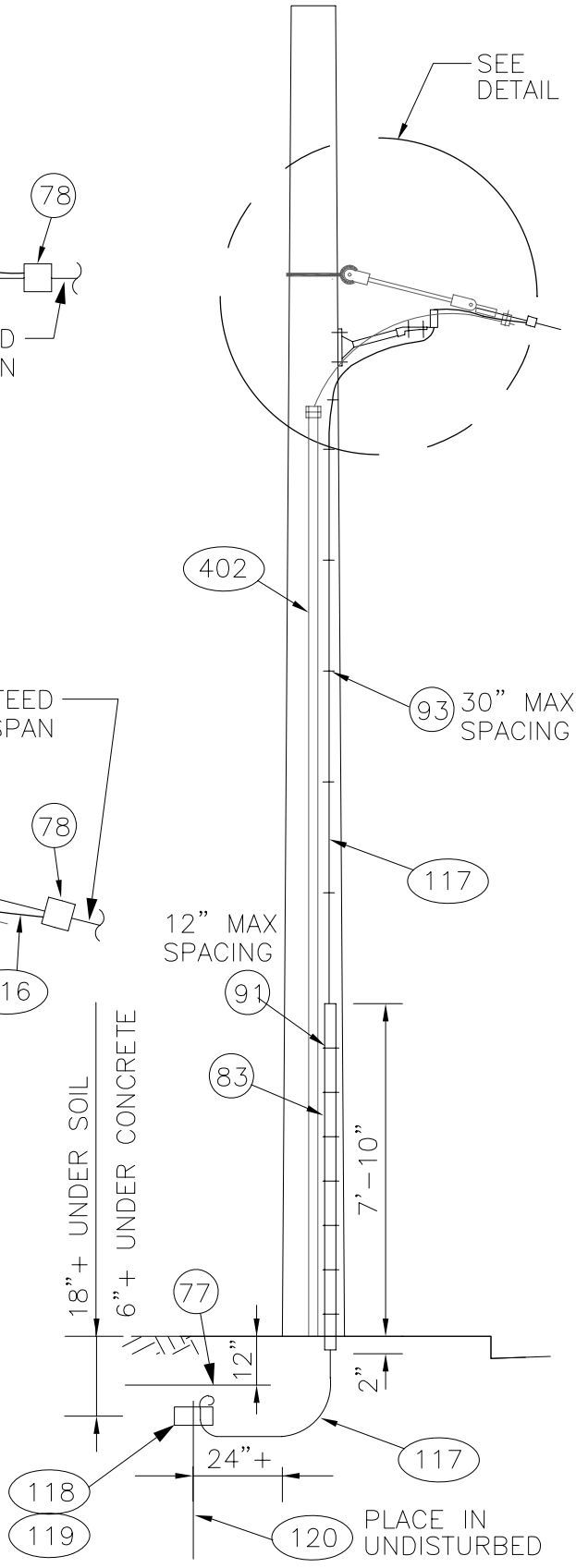

DESIGNED DPG	CHKD: DOW	King County	DEPARTMENT OF TRANSPORTATION TROLLEY STANDARDS	DATE: MAY 98
DR: MM	SCALE: NONE			FILE
RECOM.	CONTRACT:		LIGHTNING ARRESTER SINGLE FEEDER RISER (WOOD POLE)	DWG. NO. SA-401
APPROVED				SHT 2 OF 6

V:\Library & Standards\Working Documents\Trolley\Details\Completed Detail Drawing Files\SA-401.1-6.dwg, SA-401.2, 1/11/2007 9:47:18 AM

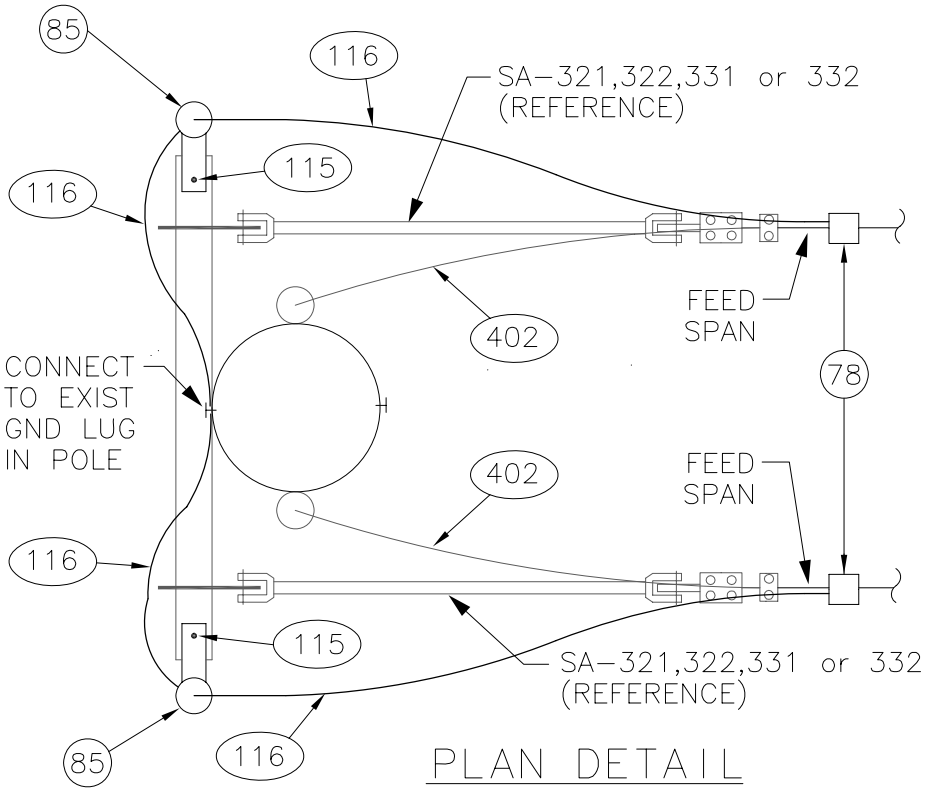

PLAN DETAIL

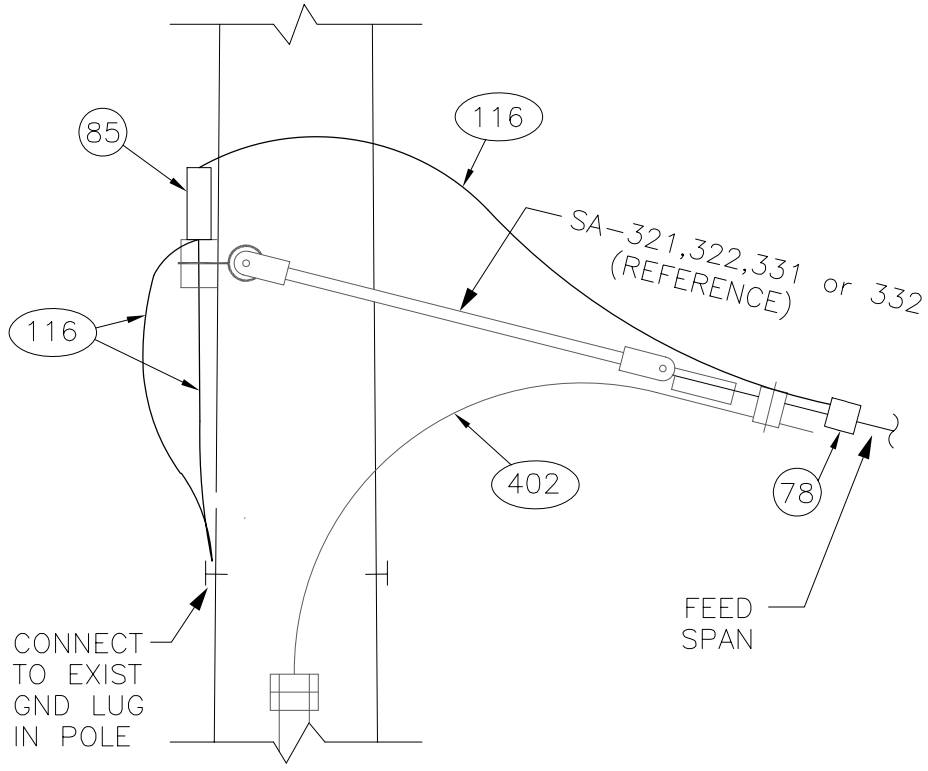

ELEV DETAIL

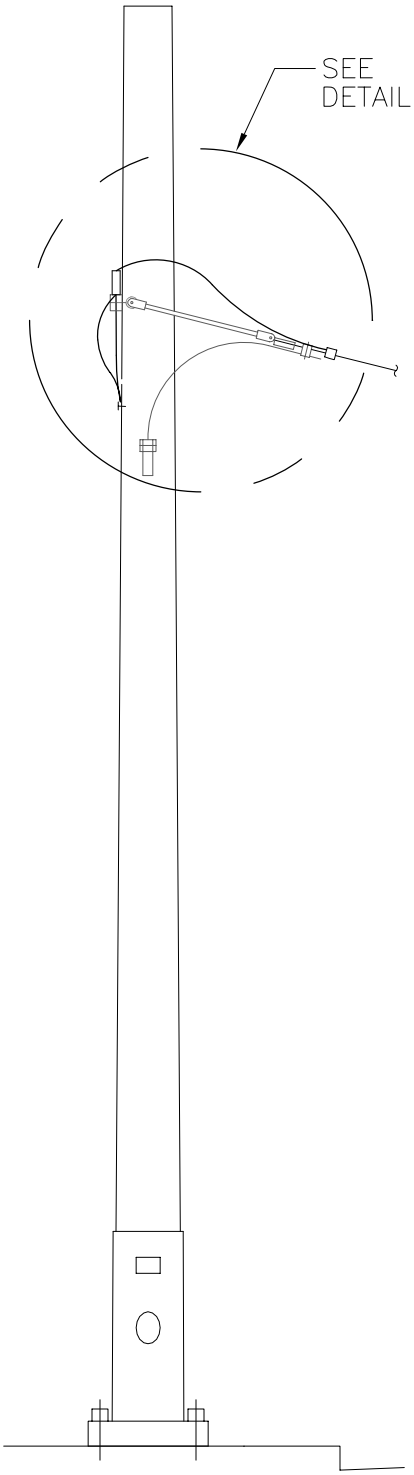

V:\Library & Standards\Working Documents\Trolley\Details\Completed Detail Drawing Files\SA-401.1-6.dwg, SA-401.3, 1/11/2007 9:49:46 AM

DESIGNED: DPG	CHKD: DOW	King County	DEPARTMENT OF TRANSPORTATION TROLLEY STANDARDS	DATE: JUN 95
DR: MM	SCALE: NONE			FILE
RECOM.	CONTRACT:		LIGHTNING ARRESTERS DOUBLE FEEDER RISER (STEEL POLE)	DWG. NO. SA–401
APPROVED				SHT 3 OF 6

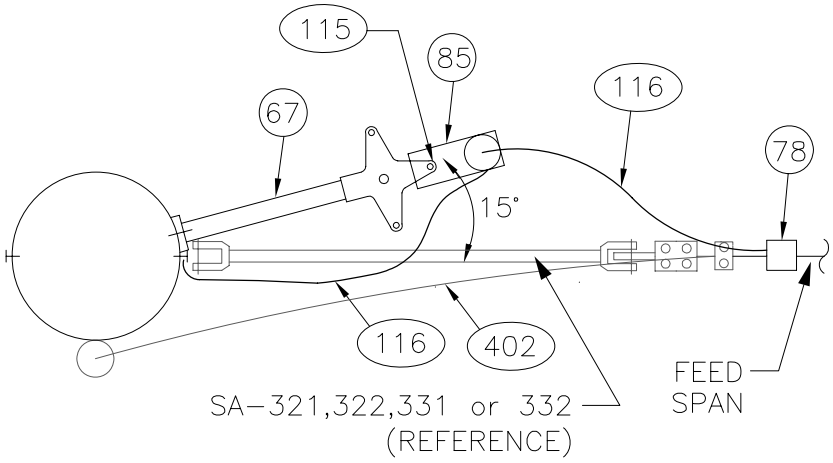

PLAN DETAIL

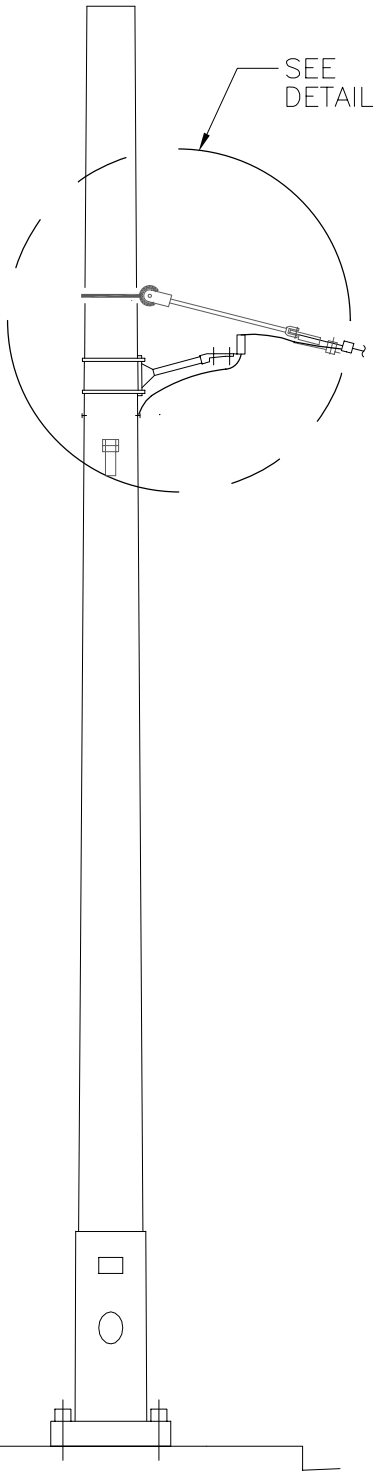

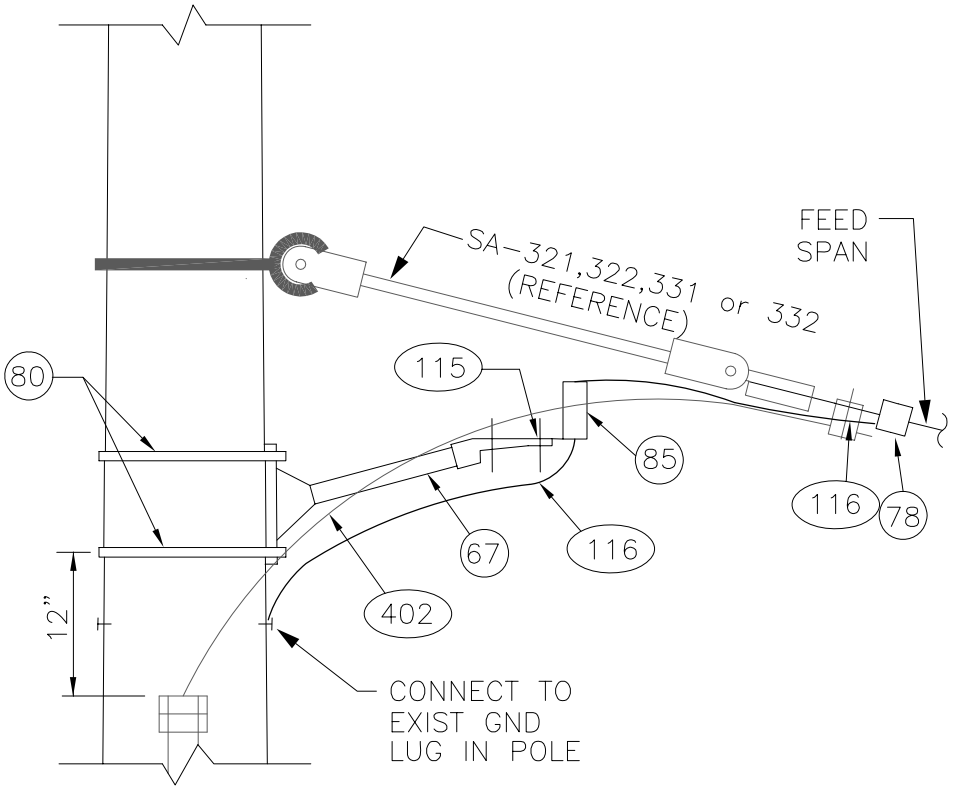

ELEV DETAIL

DESIGNED: DPG	CHKD: DOW	King County	DEPARTMENT OF TRANSPORTATION TROLLEY STANDARDS	DATE: JUN 95
DR: MM	SCALE: NONE			FILE
RECOM.	CONTRACT:		LIGHTNING ARRESTERS SINGLE FEEDER RISER (STEEL POLE)	DWG. NO. SA-401
APPROVED				SHT 4 OF 6

V:\Library & Standards\Working Documents\Trolley\Details\Completed Detail Drawing Files\SA-401.1-6.dwg, SA-401.4, 1/11/2007 9:51:17 AM

WOOD POLE SINGLE FEEDER MATERIAL LIST (SEE PAGE 2)

ITEM #	QTY	DESCRIPTION	MANUFACTURER	CAT. NO.
67	1	CLOVERLEAF EPOXIROD STANDOFF	CHANCE	C653-1038
77	AS REQD	ELEC WARNING TAPE, 6" YELLOW	BRADY	UT 20-Y6
78	1	CONNECTOR, PARALLEL CLAMP	BURNDY	QPX342C
83	1	MOLDING, PLASTIC, GROUND WIRE, 1/2" X 1/16" X 8'	JOSLYN	PM128
85	1	1000 VOLT DC ARRESTOR 970 MCOV	IMPULSE	P/N 1057
91	AS REQD	STAPLES, ROLLED POINT, GALV, 2" X 1/2" X 0.162"	JOSLYN	J156
93	AS REQD	STAPLES, ROLLED POINT, GALV, 1 3/4" X 1/4" X 0.148"	JOSLYN	J1673
115	1	STAINLESS STEEL BOLT WITH WASHERS & LOCK WASHERS		
116	*	WIRE, 2 OR 5 KV, #4 AWG CU, JACKETED, UNSHIELDED		
117	VARIES	WIRE, #6 AWG CU, SOLID, SOFT, 0.031" POLYETHYLENE INSULATED		
118	1	GROUND ROD CLAMP	COPPERWELD	ABH58
119	AS REQD	CONDUCTIVE & ANTI-SEIZE COMPOUND	THOMAS &	CP-8 OR
		(KOPR-SHIELD)	BETTS	CP-16
120	1	GROUND ROD, 5/8" X 10'	COPPERWELD OR JOSLYN	GR5810 J8340
121	2	LAG SCREW, FETTER DRIVE, 5/8" X 5"	JOSLYN	J8765
402	AS REQD	FEEDER RISER	METRO STD	SA-402

STEEL POLE SINGLE FEEDER MATERIAL LIST (SEE PAGE 4)

ITEM #	QTY	DESCRIPTION	MANUFACTURER	CAT. NO.
67	1	CLOVERLEAF EPOXIROD STANDOFF	CHANCE	C653-1038
78	1	CONNECTOR, PARALLEL CLAMP	BURNDY	QPX342C
80	AS REQD	3/4" X 0.030" SS BANDING TYPE 201	BAND-IT	C206
85	1	1000 VOLT DC ARRESTOR 970 MCOV	IMPULSE	P/N 1057
115	1	STAINLESS STEEL BOLT WITH WASHERS & LOCK WASHERS		
116	*	WIRE, 2 OR 5 KV, #4 AWG CU, JACKETED, UNSHIELDED		
402	AS REQD	FEEDER RISER	METRO STD	SA-402

DESIGNED DPG	CHKD: DPG	King County	DEPARTMENT OF TRANSPORTATION TROLLEY STANDARDS	DATE: MAY 98
DR: DOW	SCALE: NONE		LIGHTNING ARRESTER SINGLE FEEDER RISER MATERIAL LIST	FILE
RECOM.	CONTRACT:			DWG. NO. SA-401
APPROVED				SHT 5 OF 6

V:\Library & Standards\Working Documents\Trolley\Details\Completed Detail Drawing Files\SA-401.1-6.dwg, SA-401.5, 1/11/2007 9:52:30 AM

WOOD POLE DOUBLE FEEDER MATERIAL LIST (SEE PAGE 1)

ITEM #	QTY	DESCRIPTION	MANUFACTURER	CAT. NO.
77	AS REQD	ELEC WARNING TAPE, 6" YELLOW	BRADY	UT 20-Y6
78	2	CONNECTOR, PARALLEL CLAMP	BURNDY	QPX342C
81	1	CONNECTOR, SERVICE, SPLIT BOLT	BURNDY	KS20
83	1	MOLDING, PLASTIC, GROUND WIRE, 1/2" X 1/16" X 8'	JOSLYN	PM128
85	2	1000 VOLT DC ARRESTOR 970 MCOV	IMPULSE	P/N 1057
91	AS REQD	STAPLES, ROLLED POINT, GALV, 2" X 1/2" X 0.162"	JOSLYN	J156
93	AS REQD	STAPLES, ROLLED POINT, GALV, 1 3/4" X 1/4" X 0.148"	JOSLYN	J1673
115	2	STAINLESS STEEL BOLT WITH WASHERS & LOCK WASHERS		
116	*	WIRE, 2 OR 5 KV, #4 AWG CU, JACKETED, UNSHIELDED		
117	VARIES	WIRE, #6 AWG CU, SOLID, SOFT, 0.031" POLYETHYLENE INSULATED		
118	1	GROUND ROD CLAMP	COPPERWELD	ABH58
119	AS REQD	CONDUCTIVE & ANTI-SEIZE COMPOUND (KOPR-SHIELD)	THOMAS & BETTS	CP-8 OR CP-16
120	1	GROUND ROD, 5/8" X 10'	COPPERWELD OR JOSLYN	GR5810 J8340
402	AS REQD	FEEDER RISER	METRO STD	SA-402

STEEL POLE DOUBLE FEEDER MATERIAL LIST (SEE PAGE 3)

ITEM #	QTY	DESCRIPTION	MANUFACTURER	CAT. NO.
78	2	CONNECTOR, PARALLEL CLAMP	BURNDY	QPX342C
85	2	1000 VOLT DC ARRESTOR 970 MCOV	IMPULSE	P/N 1057
115	2	STAINLESS STEEL BOLT WITH WASHERS & LOCK WASHERS		
116	*	WIRE, 2 OR 5 KV, #4 AWG CU, JACKETED, UNSHIELDED		
402	AS REQD	FEEDER RISER	METRO STD	SA-402

DESIGNED DPG	CHKD: DPG	King County	DEPARTMENT OF TRANSPORTATION TROLLEY STANDARDS	DATE: MAR 97
DR: DOW	SCALE: NONE		LIGHTNING ARRESTER DOUBLE FEEDER MATERIAL LIST	FILE
RECOM.	CONTRACT:			DWG. NO. SA-401
APPROVED				SHT 6 OF 6

V:\Library & Standards\Working Documents\Trolley\Details\Completed Detail Drawing Files\SA-401.1-6.dwg, SA-401.6, 1/11/2007 9:53:11 AM

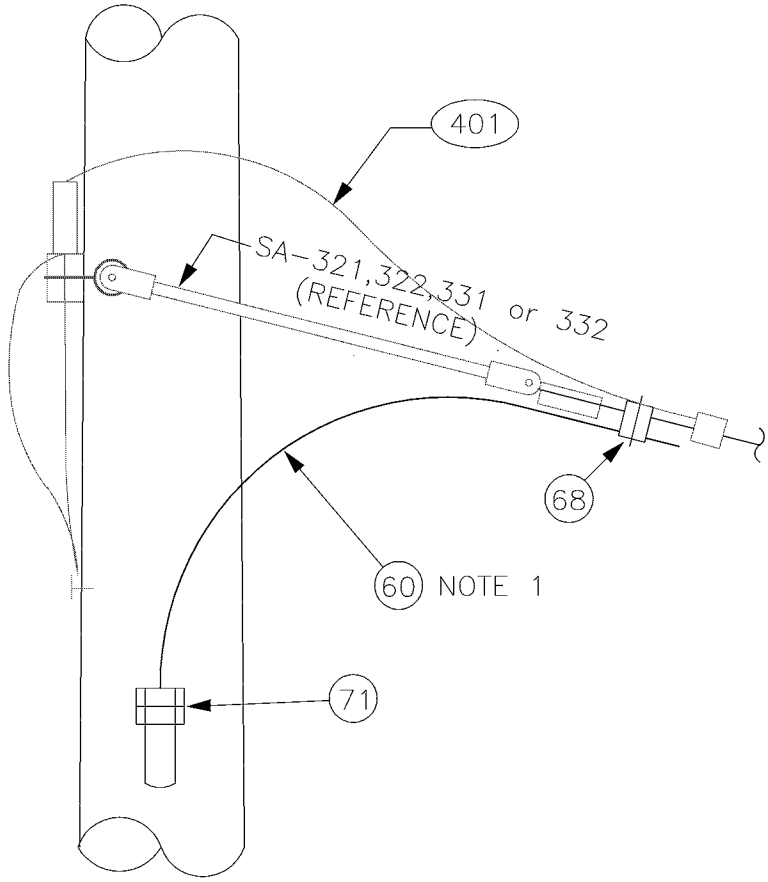

ELEV DETAIL

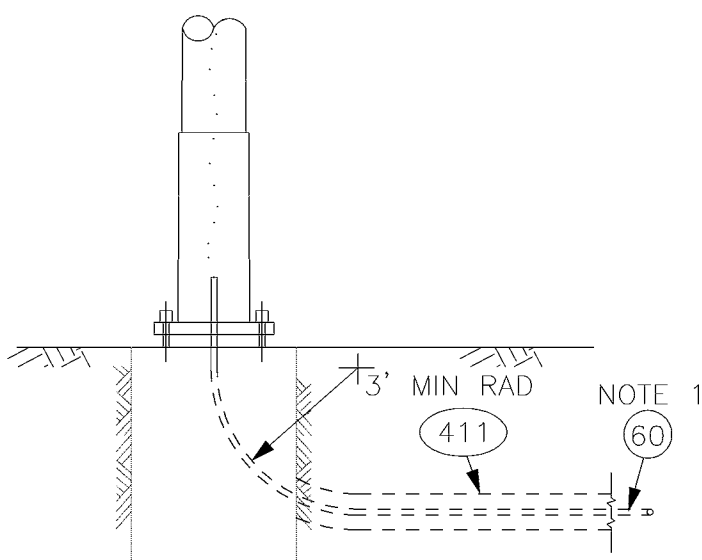

SECTION A-A

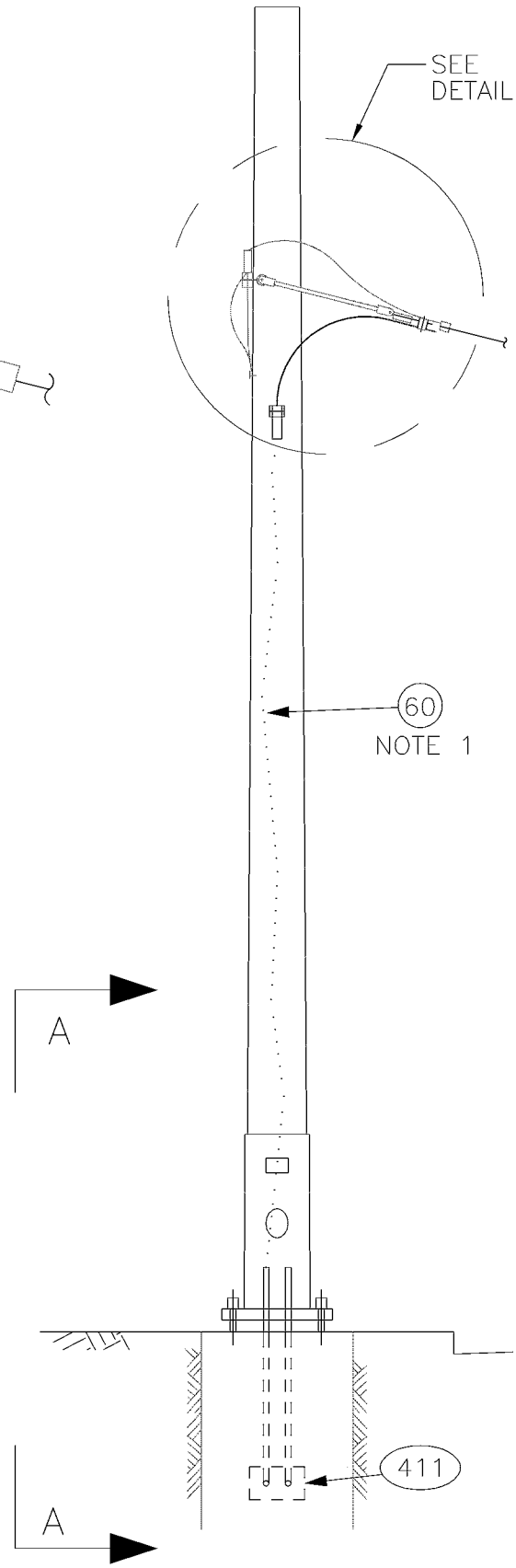

DESIGNED DPG	CHKD: DOW	King County	DEPARTMENT OF TRANSPORTATION TROLLEY STANDARDS	DATE: JUN 95
DR: MM	SCALE: NONE			FILE
RECOM.	CONTRACT:		FEEDER RISER (STEEL POLE)	DWG. NO. SA-402
APPROVED				SHT 1 OF 3

V:\Library & Standards\Standards\Trolley\Details\SA-402.1-3.dwg, SA-402.1, 1/5/2007 12:35:39 PM

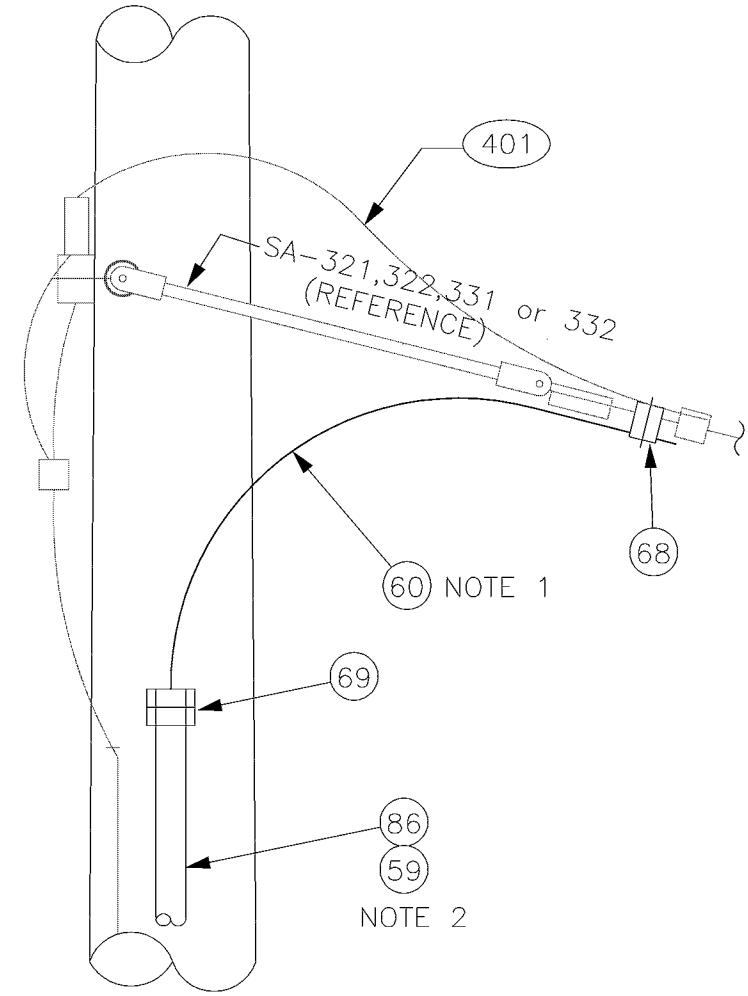

ELEV DETAIL

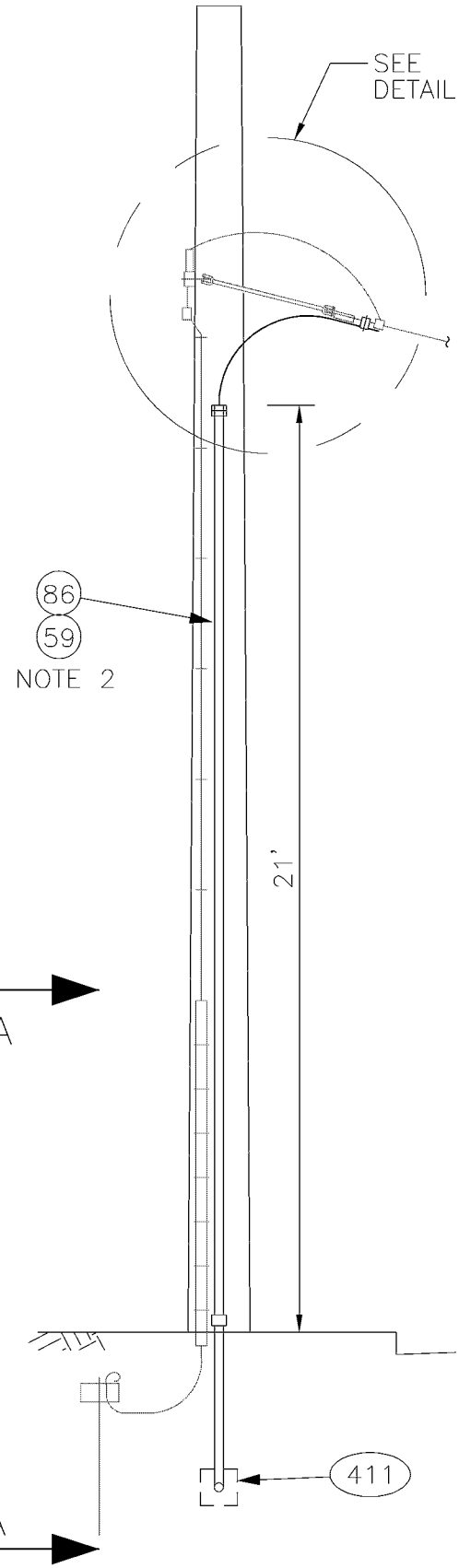

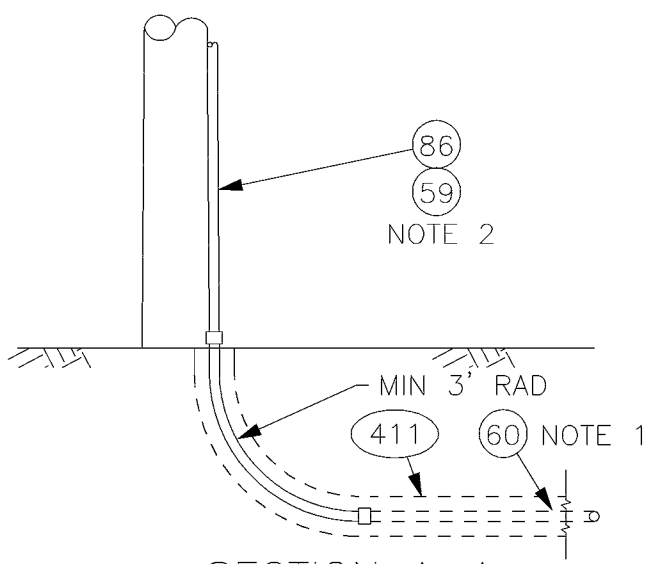

SECTION A–A

A

A

DESIGNED DPG	CHKD: DOW	King County	DEPARTMENT OF TRANSPORTATION TROLLEY STANDARDS	DATE: JUN 95
DR: MM	SCALE: NONE		FEEDER RISER (WOOD POLE)	FILE
RECOM.	CONTRACT:			DWG. NO. SA–402
APPROVED				SHT 2 OF 3

V:\Library & Standards\Standards\Trolley\Details\SA-402.1-3.dwg, SA-402.2, 1/5/2007 12:35:44 PM

STEEL POLE MATERIAL LIST (SEE PAGE 1)

ITEM #	QTY	DESCRIPTION	MANUFACTURER	CAT. NO.
60	AS REQD	FEED SPAN CABLE 500 KCM CU, UN-SHIELDED, 5 KV EPR W/ PVC JACKET		
68	1 or 2	UNIVERSAL SERVICE CONNECTOR	BURNDY	KVSU 34
71	1 or 2	WATERTIGHT STR STRAIN RELIEF CONN 1 1/2" CONDUIT	O-Z-GEDNEY	SR 15012 H. D. GALV.
401	AS REQD	LIGHTNING ARRESTER	METRO STD	SA-401
411	AS REQD	DUCTBANK	METRO STD	SA-411

WOOD POLE MATERIAL LIST (SEE PAGE 2)

ITEM #	QTY	DESCRIPTION	MANUFACTURER	CAT. NO.
59	AS REQD	CONDUIT CLAMP W/2" MTG SCREW		
60	AS REQD	FEED SPAN CABLE 500 KCM CU, UN-SHIELDED, 5 KV EPR W/ PVC JACKET		
68	1 or 2	UNIVERSAL SERVICE CONNECTOR	BURNDY	KVSU 34
69	1 or 2	SEALING BUSHING, TYPE KR W/ TYPE M CABLE SUPPORT 2-1/2" CONDUIT	O-Z-GEDNEY	KR250 & RPLG-2001-1
86	AS REQD	GALV RIGID STEEL CONDUIT		
401	AS REQD	LIGHTNING ARRESTER	METRO STD	SA-401
411	AS REQD	DUCTBANK	METRO STD	SA-411

NOTES:

1. ITEM 60 SHALL INCLUDE SUFFICIENT LENGTH TO CONNECT FEED SPAN WITH VAULT SHOWN ON DRAWINGS. COIL 20' AT VAULT END, AND COIL 10' AT FEED SPAN END.
2. ITEMS 59 & 86 TO MEET REQUIREMENTS OF SEATTLE CITY LIGHT SPEC U7-10. SINGLE RISER IS SHOWN, A SECOND CONDUIT SHALL BE ADDED FOR DOUBLE FEED RISER.
3. ITEM 86 & 411 CONDUIT TO BE PLASTIC COATED GALV RIGID STEEL IN BENDS.

V:\Library & Standards\Standards\Trolley\Details\SA-402.1-3.dwg, SA-402.3, 1/5/2007 12:35:50 PM

DESIGNED DPG	CHKD: DPG	King County	DEPARTMENT OF TRANSPORTATION TROLLEY STANDARDS	DATE: JUN 95
DR: DOW	SCALE: NONE		FEEDER RISER MATERIAL LIST	FILE
RECOM.	CONTRACT:			DWG. NO. SA-402
APPROVED				SHT 3 OF 3

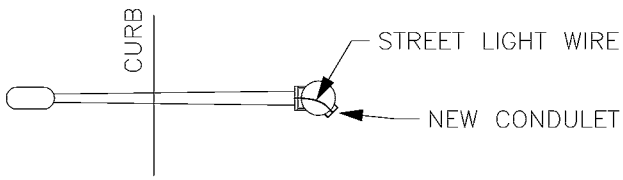

PLAN D–D

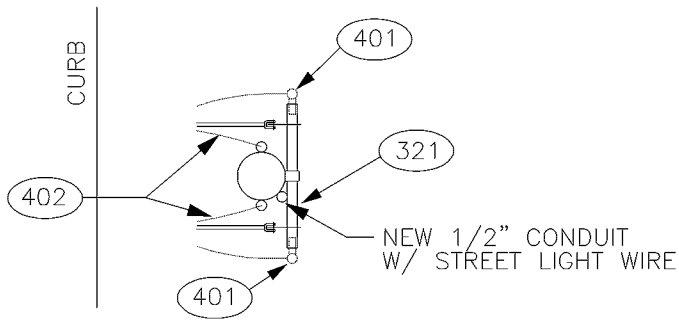

PLAN C–C

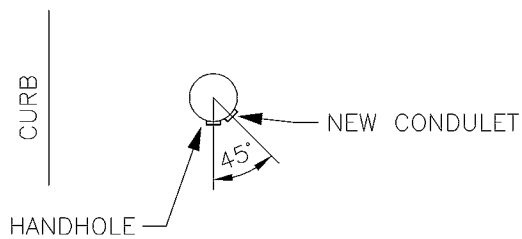

PLAN B–B

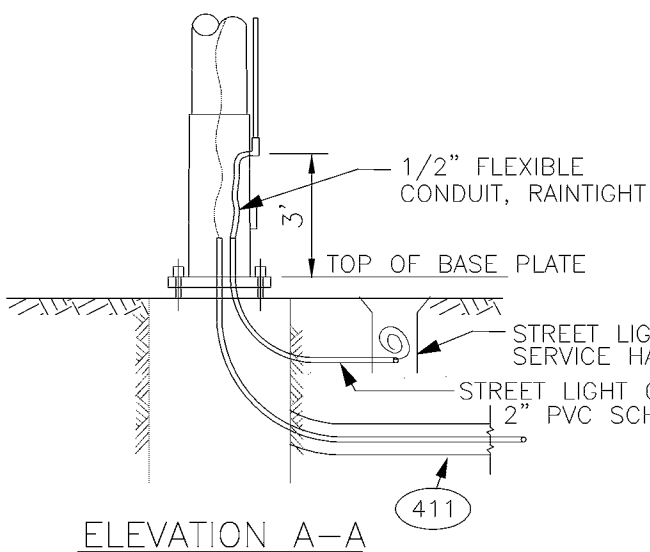

ELEVATION A–A

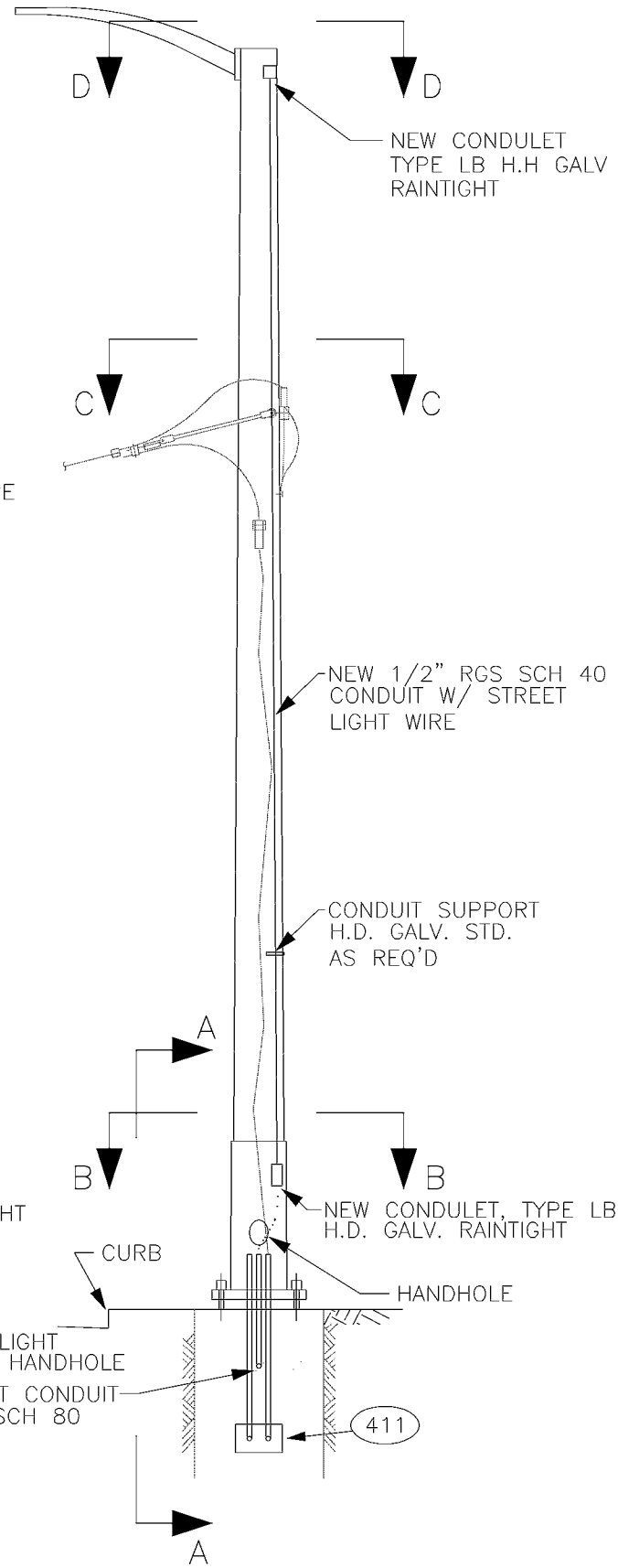

DESIGNED DPG	CHKD: DOW	King County	DEPARTMENT OF TRANSPORTATION TROLLEY STANDARDS	DATE: MAY 96
DR: MM	SCALE: NONE			FILE
RECOM.	CONTRACT:		STEEL POLE FEEDER RISER WITH STREETLIGHT SPECIAL DETAILS	DWG. NO. SA–403
APPROVED				SHT 1 OF 1

V:\Library & Standards\Standards\Trolley\Details\SA-403.dwg, SA-403, 1/5/2007 12:35:56 PM

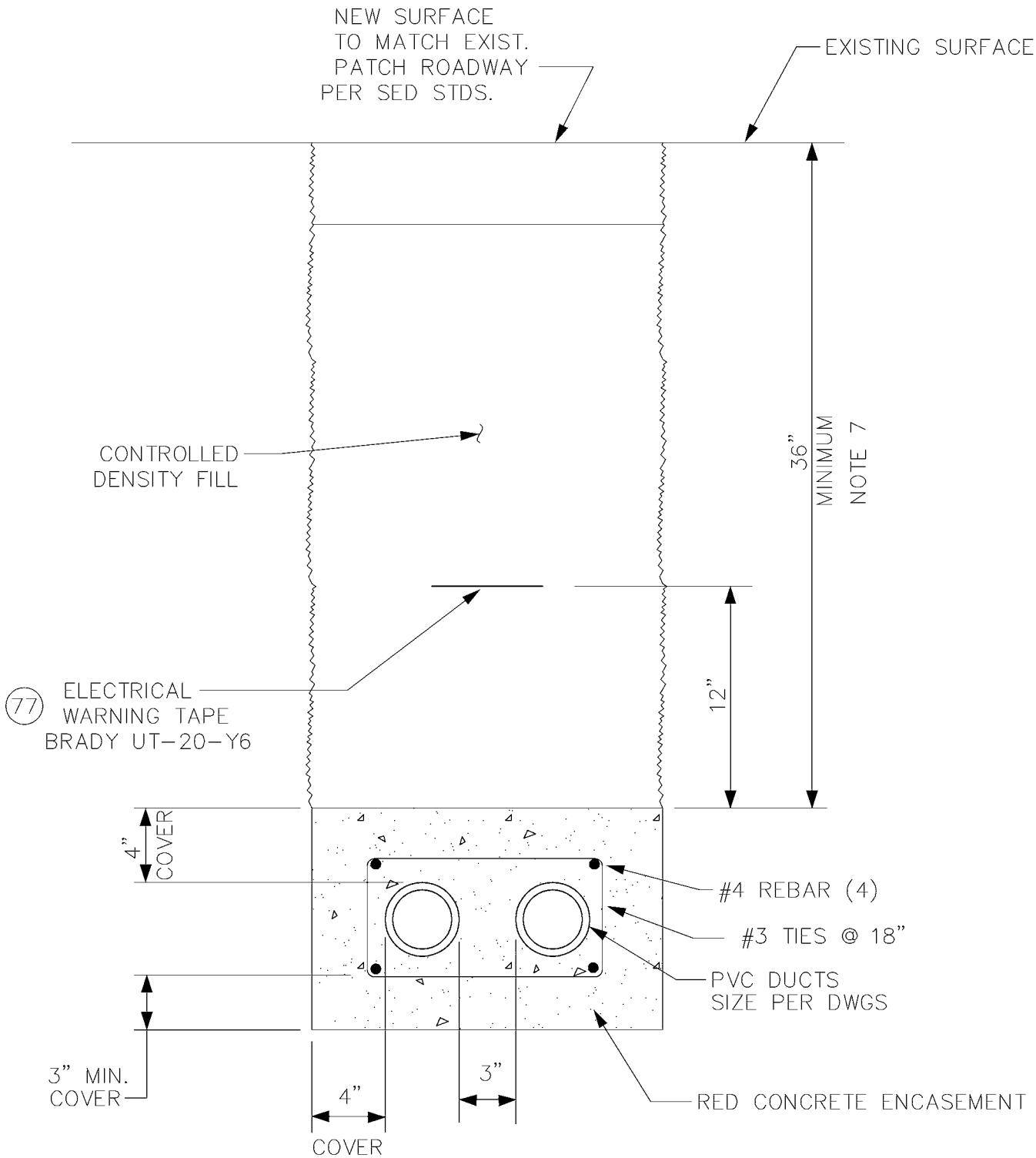

CONCRETE ENCASED DUCTBANK

SCALE: NOT TO SCALE

DESIGNED DPG	CHKD: MB	King County	DEPARTMENT OF TRANSPORTATION TROLLEY STANDARDS	DATE: JUN 95
DR: DOW	SCALE: NONE			FILE
RECOM.	CONTRACT:		DUCTBANK CONCRETE ENCASED	DWG. NO. SA-411
APPROVED				SHT 1 OF 2

V:\Library & Standards\Standards\Trolley\Details\SA-411.1-2.dwg, SA-411.1, 1/5/2007 12:36:06 PM

NOTES:

1. PVC conduit, fittings, and solvent shall meet the requirements of USDC Commercial Standard CS 207, UL 651, ASTM 2564, NEMA TC2, NEMA TC6 & NEMA TC9.

2. All work shall meet the requirements of City of Seattle Board of Public Works Rules: Chapter 4.40 – Street and Sidewalk Pavement Opening and Restoration Rules if duct is in Street Right of Way.

3. Concrete for duct shall develop a minimum compressive strength of 3000 PSI at 28 days, and shall be colored red by adding ten pounds of iron oxide per cubic yard of concrete. Max. aggregate size shall be 3/8".

4. All reinforcing bars shall be deformed billet steel and shall meet the requirements of ASTM A615 Grade 60. All detailing of reinforcement shall meet the requirements of the MANUAL OF STANDARD PRACTICE For Detailing Reinforced Concrete Structures ACI–315 current edition.

5. Compacted trench backfill shall be suitable excavated native material, that is acceptable to the engineer. Backfill shall be firmly and thoroughly machine tamped to 95% maximum dry density under streets or sidewalks, and 90% maximum dry density under landscaped or unimproved areas.

6. Pavement patching shall meet the requirements of City of Seattle Department of Engineering Standard Plan No. 404A, if the duct is in street.

7. Burial depth shall be 48" minimum at street intersections (maximum depth shall be 72"). Maximum grade shall be 10%. Minimum grade shall be 0.25%.

8. Plastic coated GRS conduit shall be used to accomadate horizontal direction changes greater than 15°. The sweep shall be effected with a 12.5 ft minimum radius, and PVC adapter couplings as required. The

V:\Library & Standards\Standards\Trolley\Details\SA-411.1-2.dwg, SA-411.2, 1/5/2007 12:36:13 PM

DESIGNED DPG	CHKD: MB	King County	DEPARTMENT OF TRANSPORTATION TROLLEY STANDARDS	DATE: JUN 95
DR: DOW	SCALE: NONE			FILE
RECOM.	CONTRACT:		DUCTBANK CONCRETE ENCASED	DWG. NO. SA–411
APPROVED				SHT 2 OF 2

NUMBER	TITLE	SHEETS
SA-500	DRAWING INDEX	1
SA-501	MASTER MATERIAL LIST	3
SA-511	TANGENT SPAN	1
SA-515	BRIDLE SPAN	1
SA-541	STEEL POLE BRACKET ASSEMBLY TANGENT CONST	2
SA-542	STEEL POLE BRACKET ASSEMBLY CURVE CONST	2
SA-549	STEEL POLE TANGENT FEEDER BRACKET ASSEMBLY	3
SA-551	WOOD POLE BRACKET ASSEMBLY TANGENT CONST	2
SA-552	WOOD POLE BRACKET ASSEMBLY CURVE CONST	2
SA-553	CONCRETE ATTACHMENT BRACKET ASSEMBLY CURVE CONST	2
SA-557	WOOD POLE BRACKET ASSEMBLY CURVE CONST (2 TRACKS)	2
SA-559	WOOD POLE TANGENT FEEDER BRACKET ASSEMBLY	3
SA-571	SPECIALWORK PULLOFFS	5
SA-572	DEAD END ASSEMBLY	2
SA-590	TEMPORARY INSULATION BOARD	1

DESIGNED DPG	CHKD: DPG	King County	DEPARTMENT OF TRANSPORTATION WATERFRONT STREETCAR STANDARDS	DATE: APR 95
DR: DOW	SCALE: NONE			FILE
RECOM.	CONTRACT:		WATERFRONT STREETCAR DRAWING INDEX	DWG. NO. SA-500
APPROVED				SHT 1 OF 1

V:\Library & Standards\Standards\Trolley\Details\SA-500.dwg, SA-500, 1/5/2007 12:36:23 PM

MASTER MATERIAL LIST

ITEM #	METRO STANDARD SA– WHICH USES THE ITEM
01	511, 515, 571, 590
02	511, 515, 590
03	511, 515, 542, 549, 552, 553, 557, 559, 571, 572
04	511, 515, 542, 549, 552, 553, 557, 559, 571, 572
05	511, 515, 542, 552, 553, 557, 571, 572
06	511, 515, 542, 552, 553, 557, 571, 572
07	511, 515, 542, 549, 552, 553, 557, 559, 571, 572
08	511, 515, 542, 549, 552, 553, 557, 559, 571, 572
09	515, 571, 572
10	549, 559
11	542, 549, 552, 553, 557, 559, 572
12	542, 552, 553, 557, 571
13	572
14	572
15	572
16	572
17	541, 542, 549, 551, 552, 553, 557, 559, 572
18	*
19	*
20	*
21	*
22	*
23	*
24	*
25	*
26	*
27	*
28	541, 542, 551, 552, 553, 557
29	*
30	541, 551
31	541, 551
32	*
33	*
34	*
35	*
36	*
37	*
38	542, 552, 553, 557
39	*
40	571
41	549, 559
42	549, 559

DESIGNED DPG	CHKD: DPG	King County	DEPARTMENT OF TRANSPORTATION WATERFRONT STREETCAR STANDARDS	DATE: FEB 98
DR: DOW	SCALE: NONE			FILE
RECOM.	CONTRACT:		WFSC MASTER MATERIAL LIST USAGE REFERENCE	DWG. NO. SA–501
APPROVED				SHT 1 OF 3

V:\Library & Standards\Standards\Trolley\Details\SA-501.1-2.dwg, SA-501.1, 1/5/2007 12:36:32 PM

MASTER MATERIAL LIST

ITEM #	METRO STANDARD SA– WHICH USES THE ITEM
43	*
44	542, 552, 553, 557
45	542, 552, 553, 557
46	571
47	542, 552, 553, 557, 571
48	*
49	549, 559
50	549, 559
51	549, 559
52	549, 559
53	542, 552, 553, 557
54	542, 552, 553, 557
55	541, 542, 549, 551, 552, 553, 557, 559
56	541, 542, 549, 551, 552, 553, 557, 559
57	541, 542, 549, 551, 552, 553, 557, 559
58	*
59	*
60	549, 559
61	*
62	*
63	*
64	*
65	551, 552, 557, 559
66	*
67	*
68	*
69	*
70	*
71	*
72	*
73	571
74	590
75	590
76	*
77	*
78	*
79	541, 551
80	541, 551
81	*
82	*
83	*
84	*

DESIGNED DPG	CHKD: DPG	King County	DEPARTMENT OF TRANSPORTATION WATERFRONT STREETCAR	DATE: FEB 98
DR: DOW	SCALE: NONE		WFSC MASTER MATERIAL LIST USAGE REFERENCE	FILE
RECOM.	CONTRACT:			DWG. NO. SA–501
APPROVED				SHT 2 OF 3

V:\Library & Standards\Standards\Trolley\Details\SA-501.1-2.dwg, SA-501.2, 1/5/2007 12:36:38 PM

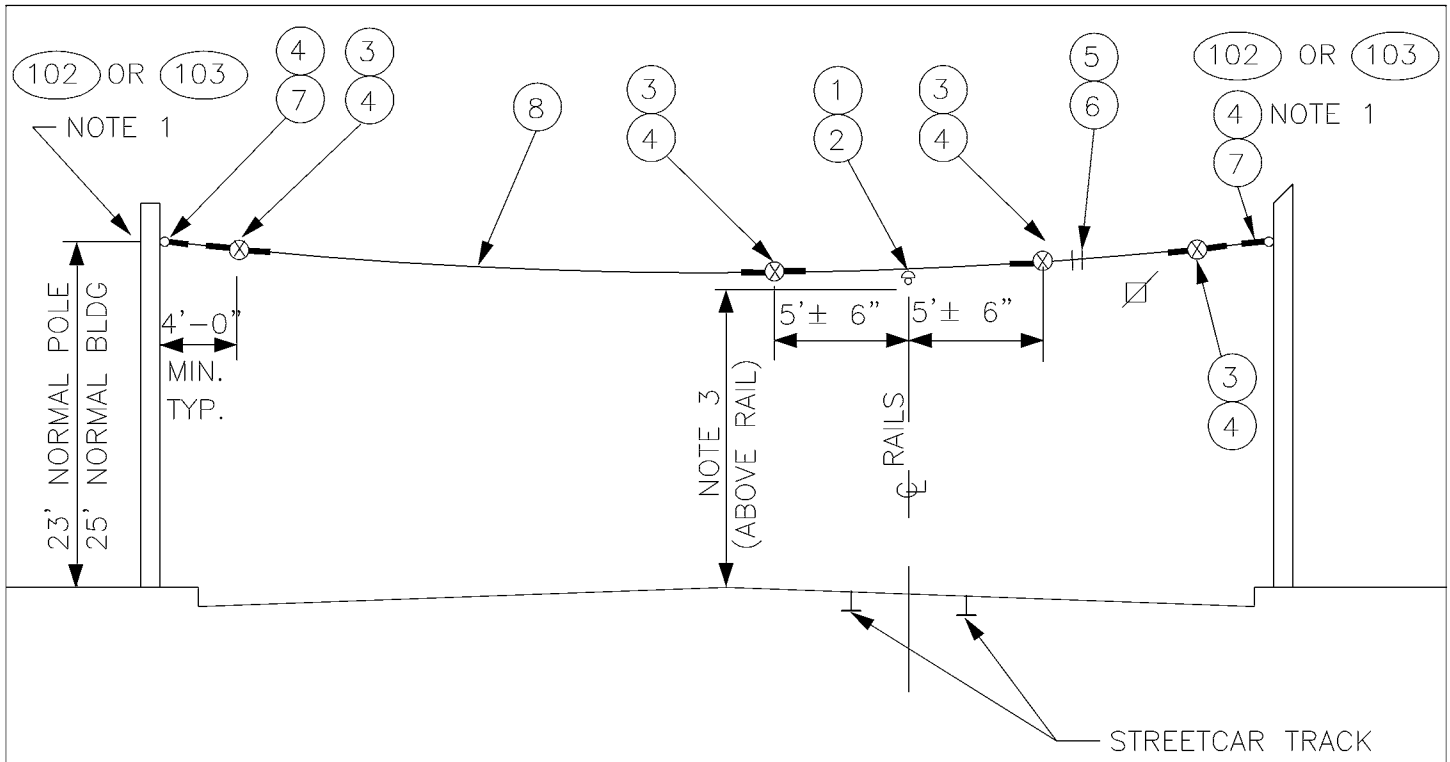

NOTES:

1. A POLE COLLAR OR POLE EYEBOLT IS REQUIRED PER SA-102 OR SA-103 UNLESS A BUILDING EYEBOLT ATTACHMENT IS USED. INSTALLATION HEIGHT TO BE INDICATED AS REQUIRED ON THE OVERHEAD DRAWINGS.

2. PROVIDE TENSION ADJUSTMENT POINTS AT LOCATIONS INDICATED BY "⊠". PROVIDE WIRE ROPE CLIPS AT EACH LOCATION. SEE SA-166.

3. SEE SA-164 FOR VERTICAL DIMENSION TO TROLLEY WIRE.

MATERIAL LIST

ITEM #	QTY	DESCRIPTION	MANUFACTURER	CAT. NO.
01	1	DETROIT CLAMP ASSY	WABCO	19293-3007
02	1	AGC TANGENT SPAN HANGER	WABCO	19360-2000
03	4	GUY STRAIN INSUL	PORCELAIN PRODUCTS CO.	504
04	9	GUY GRIP DEADEND	PREFORMED	CDE-3106
05	2	WIRE ROPE CLIP, 5/16"	CROSBY	G450
06	AS REQD	FRICTION TAPE, 3/4" (6 WRAPS)		
07	2	THIMBLE, 3/8" XHD, OPEN	CROSBY	G414
08	VARIES	GUY STRAND	COPPERWELD	8M
102	VARIES	FORGED THREE-PIECE ADJUSTABLE POLE BAND, ANNEALED & GALVANIZED	KORTICK MFG CO	
103	VARIES	WOOD POLE EYEBOLT	METRO STD	SA-103

DESIGNED DPG	CHKD: DOW	King County	DEPARTMENT OF TRANSPORTATION WATERFRONT STREETCAR	DATE: OCT 95
DR: TMB	SCALE: NONE			FILE
RECOM.	CONTRACT:		TANGENT SPAN	DWG. NO. SA-511
APPROVED				SHT 1 OF 1

V:\Library & Standards\Standards\Trolley\Details\SA-511.dwg, SA-511, 1/5/2007 12:36:51 PM

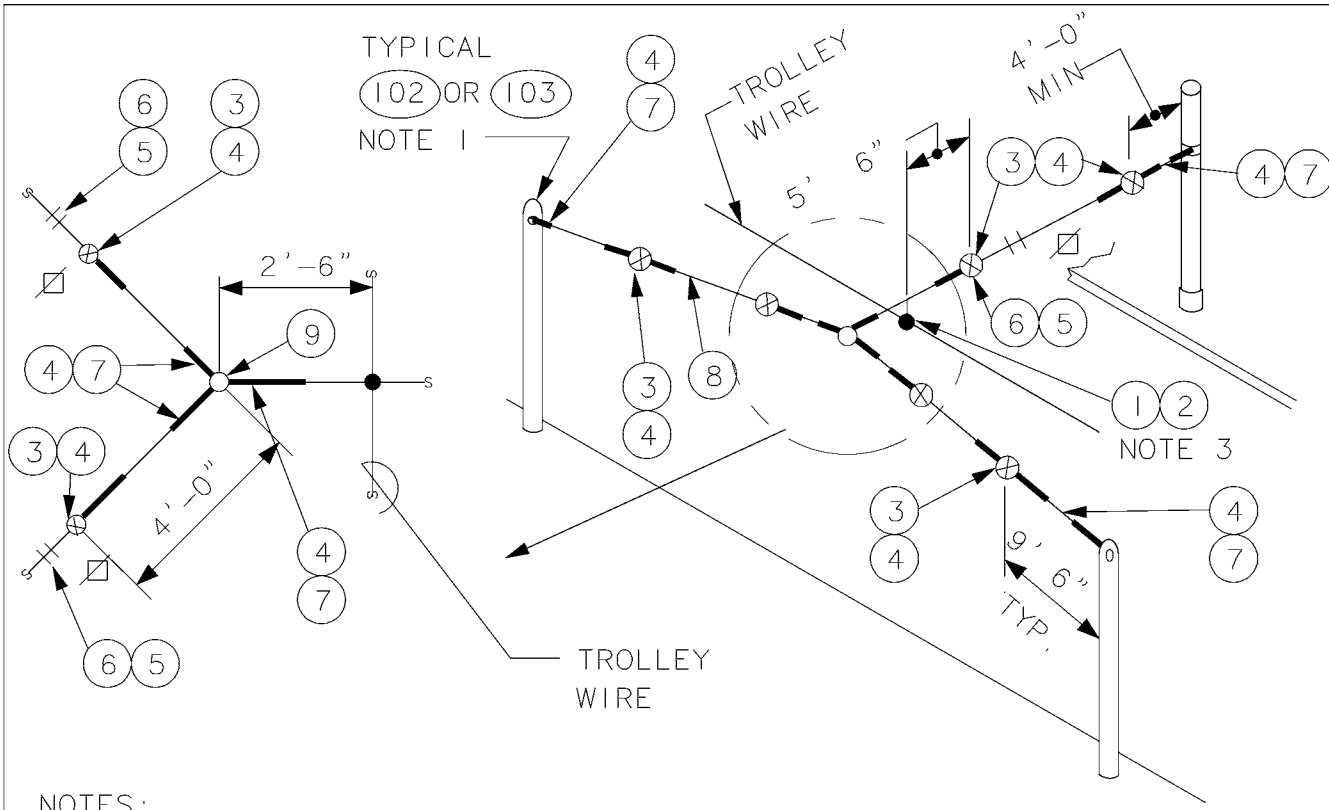

NOTES:

1. A POLE COLLAR OR POLE EYEBOLT IS REQUIRED PER SA-102 OR SA-103 UNLESS A BUILDING EYEBOLT ATTACHMENT IS USED. INSTALLATION HEIGHT TO BE INDICATED AS REQUIRED ON THE OVERHEAD DRAWINGS.
2. PROVIDE TENSION ADJUSTMENT POINTS AT LOCATIONS INDICATED BY "⊠". PROVIDE WIRE ROPE CLIPS AT EACH LOCATION. SEE SA-166.
3. SEE SA-164 FOR VERTICAL DIMENSION TO TROLLEY WIRE.

MATERIAL LIST

ITEM #	QTY	DESCRIPTION	MANUFACTURER	CAT. NO.
01	1	DETROIT CLAMP ASSY	WABCO	19293-3007
02	1	AGC TANGENT SPAN HANGER	WABCO	19360-2000
03	6	GUY STRAIN INSUL	PORCELAIN PRODUCTS CO.	504
04	15	GUY GRIP DEADEND	PREFORMED	CDE-3106
05	6	WIRE ROPE CLIP, 5/16"	CROSBY	G450
06	AS REQD	FRICTION TAPE, 3/4" (6 WRAPS)		
07	6	THIMBLE, 3/8" XHD, OPEN	CROSBY	G414
08	VARIES	GUY STRAND	COPPERWELD	8M
09	1	BULL RING	WABCO	18567-2000
102	VARIES	FORGED THREE-PIECE ADJUSTABLE POLE BAND, ANNEALED & GALVANIZED	KORTICK MFG CO	
103	VARIES	WOOD POLE EYEBOLT	METRO STD	SA-103

DESIGNED: DPG	CHKD: DOW	King County	DEPARTMENT OF TRANSPORTATION WATERFRONT STREETCAR	DATE: OCT 95
DR: TMB	SCALE: NONE			FILE
RECOM.	CONTRACT:		BRIDLE SPAN	DWG. NO. SA-515
APPROVED				SHT 1 OF 1

V:\Library & Standards\Standards\Trolley\Details\SA-515.dwg, SA-515, 1/5/2007 12:36:57 PM

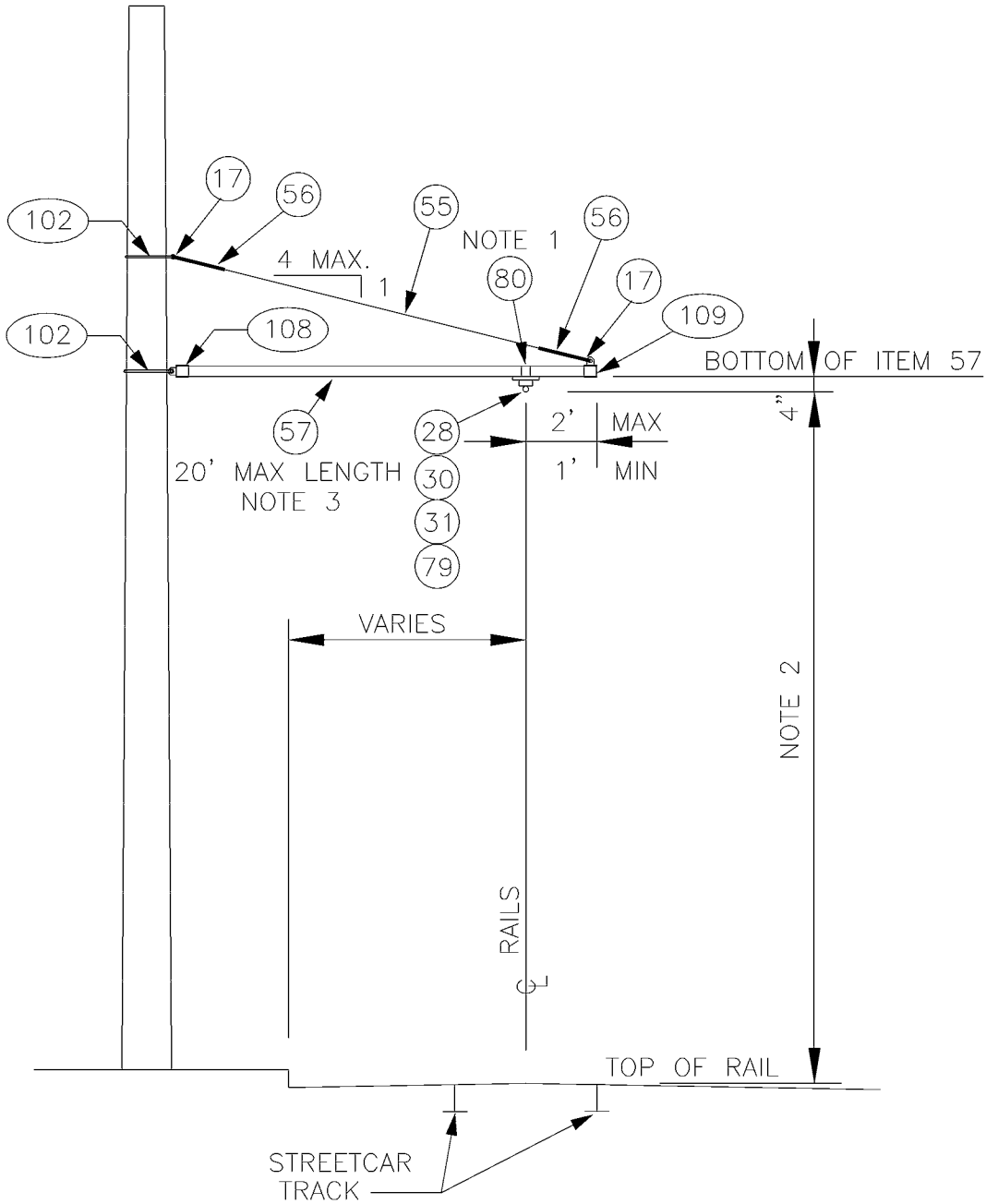

NOTES:

1. STAINLESS STEEL BANDING SHALL BE WRAPPED DOUBLE THICKNESS AROUND ITEM 57 PRIOR TO CLAMPING.
2. SEE SA–164 FOR HORIZONTAL & VERTICAL DIMENSIONS TO TROLLEY WIRE.
3. DRILL 1/2" HOLE IN TUBE TO MATCH HOLE IN ITEMS 108 & 109 FOR INSERTION OF 3/8" SS BOLT.

DESIGNED DPG	CHKD: DOW	King County	DEPARTMENT OF TRANSPORTATION WATERFRONT STREETCAR	DATE: JUN 95
DR: MM	SCALE: NONE			FILE
RECOM.	CONTRACT:		STEEL POLE BRACKET ASSEMBLY TANGENT CONSTRUCTION	DWG. NO. SA–541
APPROVED				SHT 1 OF 2

V:\Library & Standards\Standards\Trolley\Details\SA-541.1-2.dwg, SA-541.1, 1/5/2007 12:37:07 PM

MATERIAL LIST

ITEM #	QTY	DESCRIPTION	MANUFACTURER	CAT. NO.
17	2	THIMBLE, 1/2" XHD, OPEN	CROSBY	G414
28	1	INSULATOR SPOOL	WABCO	16835-2000
30	1	TROLLEY SUPPORT-LARGE PIPE ARMS	WABCO	54940-4001
31	1	SPRING DETROIT CLAMP	WABCO	54959-3001
55	VARIES	PHILLYSTRAN (3/8")	PHILLYSTRAN INC.	HPTG 6700I
56	2	PHILLYSTRAN BIG GRIP	PHILLYSTRAN INC.	PLP 2755
57	VARIES	FIBERGLASS REINFORCED PLASTIC (FRP) TUBE 3 1/2" Ø X 1/2"	MORRISON MOLDED FG	EXTREN SERIES 525
79	1	5/8"-11 UNC X 1 3/8" STUD		
80	VARIES	3/4" STAINLESS STEEL BANDING	BAND-IT	TYPE 201
102	2	FORGED THREE-PIECE ADJUSTABLE POLE BAND, ANNEALED & GALVANIZED	KORTICK MFG CO	
108	1	MAST ARM POLE END CAP	METRO STD	SA-108
109	1	MAST ARM ARM END CAP	METRO STD	SA-109

DESIGNED DPG	CHKD: DPG	King County	DEPARTMENT OF TRANSPORTATION WATERFRONT STREETCAR	DATE: OCT 95
DR: DOW	SCALE: NONE		STEEL POLE BRACKET ASSEMBLY TANGENT CONSTRUCTION	FILE
RECOM.	CONTRACT:			DWG. NO. SA-541
APPROVED				SHT 2 OF 2

V:\Library & Standards\Standards\Trolley\Details\SA-541.1-2.dwg, SA-541.2, 1/5/2007 12:37:13 PM

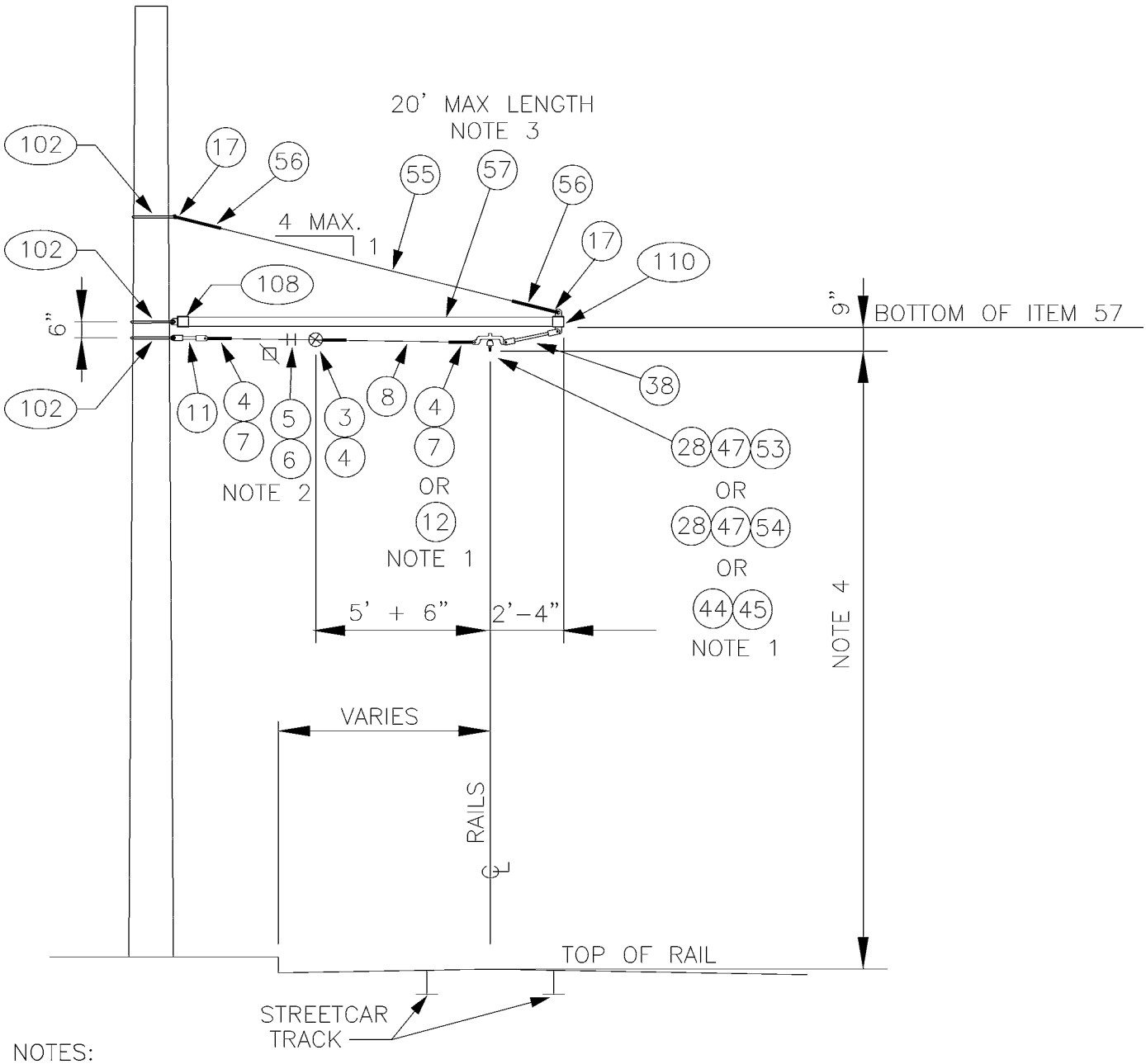

NOTES:

1. ITEMS 4,7,28,50 & 53 TO BE USED FOR 1° TO 5° ANGLE TURN. ITEMS 4, 7,28,47 & 54 TO BE USED FOR 5° TO 7.5° ANGLE TURN. ITEMS 12,44, & 45 TO BE USED FOR 8° OR GREATER ANGLE TURN. SEGMENTS SHALL NOT BE USED FOR ANGLES GREATER THAN 12° WHEN POLE IS ON INSIDE OF CURVE.
2. PROVIDE TENSION ADJUSTMENT POINTS AT LOCATIONS INDICATED BY "☒". PROVIDE WIRE ROPE CLIPS AT THESE LOCATIONS. SEE SA-166.
3. DRILL 1/2" HOLE IN TUBE TO MATCH HOLE IN ITEMS 108 & 109 FOR INSERTION OF 3/8" SS BOLT.
4. SEE SA-164 FOR HORIZONTAL & VERTICAL DIMENSIONS TO TROLLEY WIRE.

DESIGNED DPG	CHKD: DOW	King County	DEPARTMENT OF TRANSPORTATION WATERFRONT STREETCAR	DATE: JUN 95
DR: MM	SCALE: NONE			FILE
RECOM.	CONTRACT:		STEEL POLE BRACKET ASSEMBLY CURVE CONSTRUCTION	DWG. NO. SA-542
APPROVED				SHT 1 OF 2

V:\Library & Standards\Standards\Trolley\Details\SA-542.1-2.dwg, SA-542.1, 1/5/2007 12:37:19 PM

MATERIAL LIST

ITEM #	QTY	DESCRIPTION	MANUFACTURER	CAT. NO.
03	1	GUY STRAIN INSUL	PORCELAIN PRODUCTS CO.	504
04	VARIES	GUY GRIP DEADEND	PREFORMED	CDE-3106
05	2	WIRE ROPE CLIP, 5/16"	CROSBY	G450
06	AS REQD	FRICTION TAPE, 3/4" (6 WRAPS)		
07	VARIES	THIMBLE, 3/8" XHD, OPEN	CROSBY	G414
08	VARIES	GUY STRAND	COPPERWELD	8M
11	1	7/8 TRANSLITE STRAIN INSUL CL-CL	WABCO	54975-6120
12	VARIES	7/8 TRANSLITE STRAIN INSUL CL-EYE	WABCO	55339-6120
17	2	THIMBLE, 1/2" XHD, OPEN	CROSBY	G414
28	VARIES	INSULATOR SPOOL	WABCO	16835-2000
38	1	7/8 TRANSLITE STRAIN INSUL CL-CL	WABCO	54975-6200
44	VARIES	RUNNER, 6 FT TYPE C, 8 TO 12 DEG	WABCO	21375-2000
45	VARIES	PLATE-STRAIN 5 TO 12 DEG	WABCO	20290-2000
47	VARIES	DOUBLE CURVE HANGER TYPE A-2	WABCO	14073-2000
53	VARIES	CURVE RAIL	K & M	851 B412/0
54	VARIES	CURVE RAIL	K & M	851 B412/1
55	VARIES	PHILLYSTRAN (3/8")	PHILLYSTRAN INC.	HPTG 6700I
56	2	PHILLYSTRAN BIG GRIP	PHILLYSTRAN INC.	PLP 2755
57	VARIES	FIBERGLASS REINFORCED PLASTIC (FRP) TUBE 3 1/2" Ø X 1/2"	MORRISON MOLDED FG	EXTREN SERIES 525
102	3	FORGED THREE-PIECE ADJUSTABLE POLE BAND, ANNEALED & GALVANIZED	KORTICK MFG CO	
108	1	MAST ARM POLE END CAP	METRO STD	SA-108
110	1	MAST ARM UNDERSLING END CAP	METRO STD	SA-110

DESIGNED DPG	CHKD: DPG	King County	DEPARTMENT OF TRANSPORTATION WATERFRONT STREETCAR	DATE: OCT 95
DR: DOW	SCALE: NONE		STEEL POLE BRACKET ASSEMBLY CURVE CONSTRUCTION	FILE
RECOM.	CONTRACT:			DWG. NO. SA-542
APPROVED				SHT 2 OF 2

V:\Library & Standards\Working Documents\Trolley\Details\Completed Detail Drawing Files\SA-542.1-2.dwg, SA-542.2, 1/11/2007 11:24:33 AM

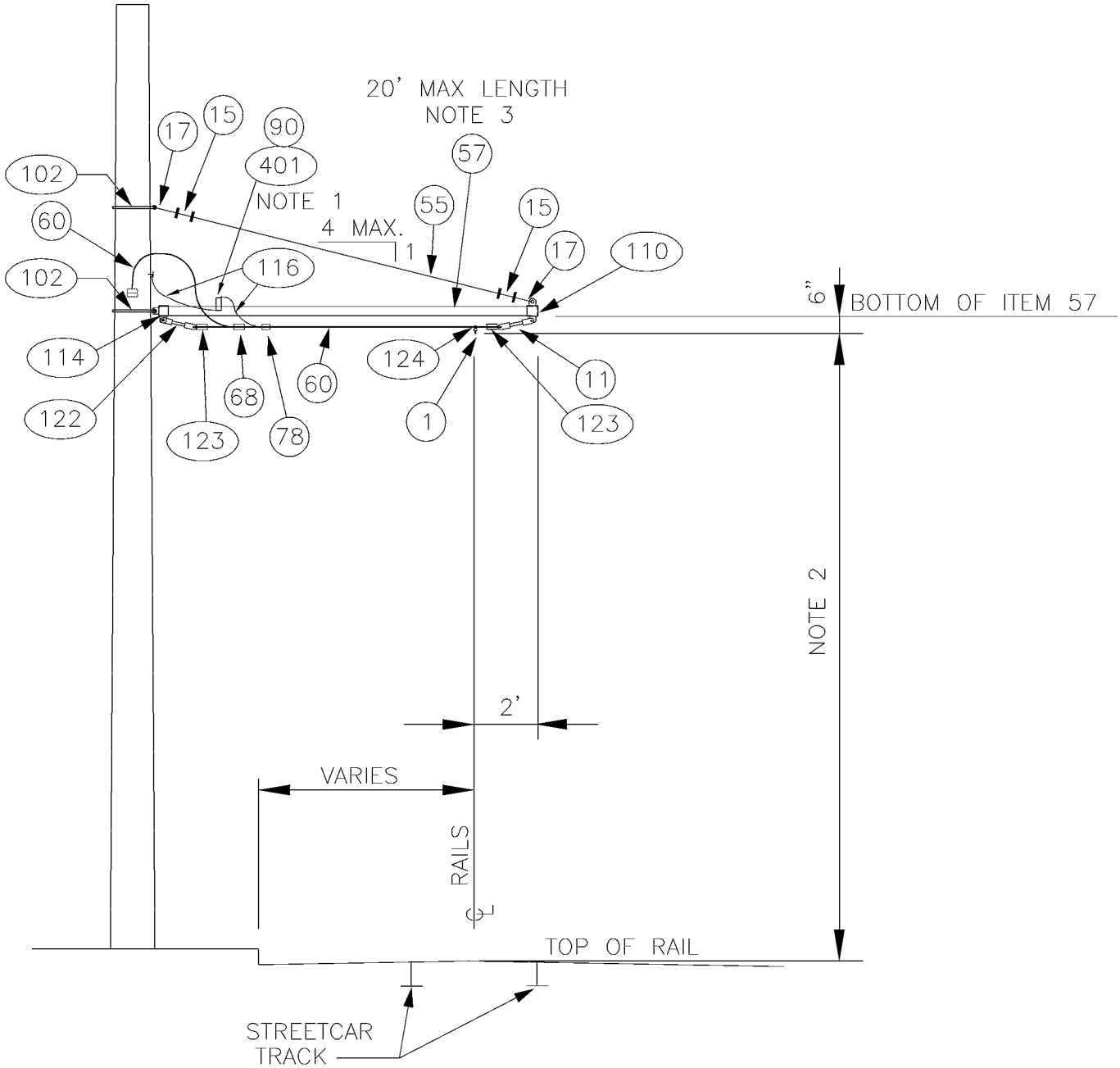

NOTES:

1. SEE DETAIL 1 ON SHEET 2 FOR DETAILS.
2. SEE SA–164 FOR HORIZONTAL & VERTICAL DIMENSIONS TO TROLLEY WIRE.
3. DRILL 1/2" HOLE IN TUBE TO MATCH HOLE IN ITEMS 110 & 114 FOR INSERTION OF 3/8" SS BOLT.
4. ALL FERROUS METAL SHOULD BE HOT DIP GALV. AFTER FABRICATION.

DESIGNED: DPG	CHKD: DOW	King County	DEPARTMENT OF TRANSPORTATION WATERFRONT STREETCAR	DATE: MAY 98
DR: MM	SCALE: NONE		STEEL POLE TANGENT FEEDER BRACKET ASSEMBLY	FILE
RECOM.	CONTRACT:			DWG. NO. SA–549
APPROVED				SHT 1 OF 3

V:\Library & Standards\Standards\Trolley\Details\SA-549.1-3.dwg, SA-549.1, 1/5/2007 12:37:36 PM

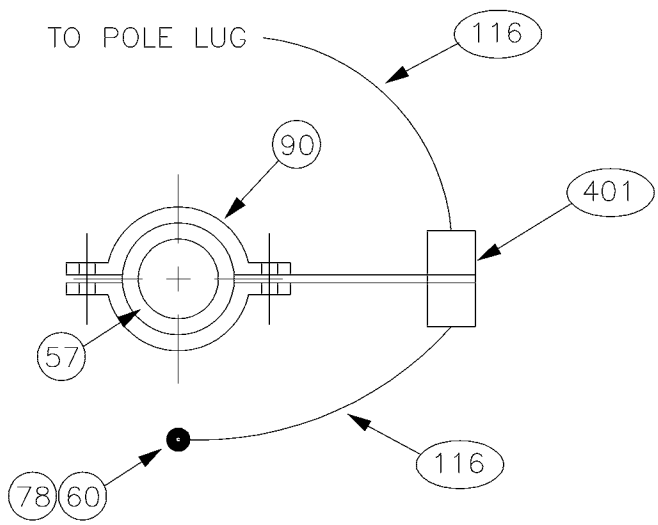

DETAIL 1

LIGHTNING ARRESTOR ATTACHMENT DETAIL

INSTALL CLAMP & ARRESTOR AT TWO FEET FROM POLE

V:\Library & Standards\Standards\Trolley\Details\SA-549.1-3.dwg, SA-549.2, 1/5/2007 12:37:43 PM

DESIGNED: DOW	CHKD: DPG	King County	DEPARTMENT OF TRANSPORTATION WATERFRONT STREETCAR	DATE: MAY 98
DR: TMB	SCALE: NONE		STEEL POLE TANGENT FEEDER BRACKET ASSEMBLY	FILE
RECOM.	CONTRACT:			DWG. NO. SA-549
APPROVED				SHT 2 OF 3

MATERIAL LIST

ITEM #	QTY	DESCRIPTION	MANUFACTURER	CAT. NO.
01	1	DETROIT CLAMP ASSY	WABCO	19293-3007
11	1	7/8 TRANSLITE STRAIN INSUL CL-CL	WABCO	54975-6120
15	4	WIRE ROPE CLIP, 3/8"	CROSBY	G450
17	2	THIMBLE, 1/2" XHD, OPEN	CROSBY	G414
55	AS REQD	PHILLYSTRAN (3/8")	PHILLYSTRAN INC.	HPTG 6700I
57	VARIES	FIBERGLASS REINFORCED PLASTIC (FRP) TUBE 3 1/2" Ø X 1/2"	MORRISON MOLDED FG	EXTREN SERIES 525
60	AS REQD	FEED SPAN CABLE		
68	1	UNIVERSAL SERVICE CONNECTOR	BURNDY	KVSU34
78	1	CONNECTOR, PARALLEL CLAMP	BURNDY	QPX342C
90	1	HEAVY PIPE CLAMP, GALV, 3" IPS	GRINNELL	FIG. 216
102	2	FORGED THREE-PIECE ADJUSTABLE POLE BAND, ANNEALED & GALVANIZED	KORTICK MFG CO	
110	1	MAST ARM UNDERSLING END CAP	METRO STD	SA-110
114	1	MAST ARM POLE END CAP W/ BOT. TAB	METRO STD	SA-114
116	VARIES	WIRE, 2 OR 5 KV, #4 AWG CU, JACKETED, UNSHIELDED		
122	1	7/8 TRANSLITE STRAIN INSUL CL-TB	WABCO	54982-3001
123	2	FEEDER-TYPE E DEAD END	WABCO	21590-2000
124	1	CLAMP ASSEMBLY	WABCO	54936-3006
401	1	LIGHTNING ARRESTOR	METRO STD	SA-401

DESIGNED: DOW	CHKD: DPW	King County	DEPARTMENT OF TRANSPORTATION WATERFRONT STREETCAR	DATE: MAY 98
DR: TMB	SCALE: NONE			FILE
RECOM.	CONTRACT:		STEEL POLE TANGENT FEEDER BRACKET ASSEMBLY	DWG. NO. SA-549
APPROVED				SHT 3 OF 3

V:\Library & Standards\Standards\Trolley\Details\SA-549.1-3.dwg, SA-549.3, 1/5/2007 12:37:50 PM

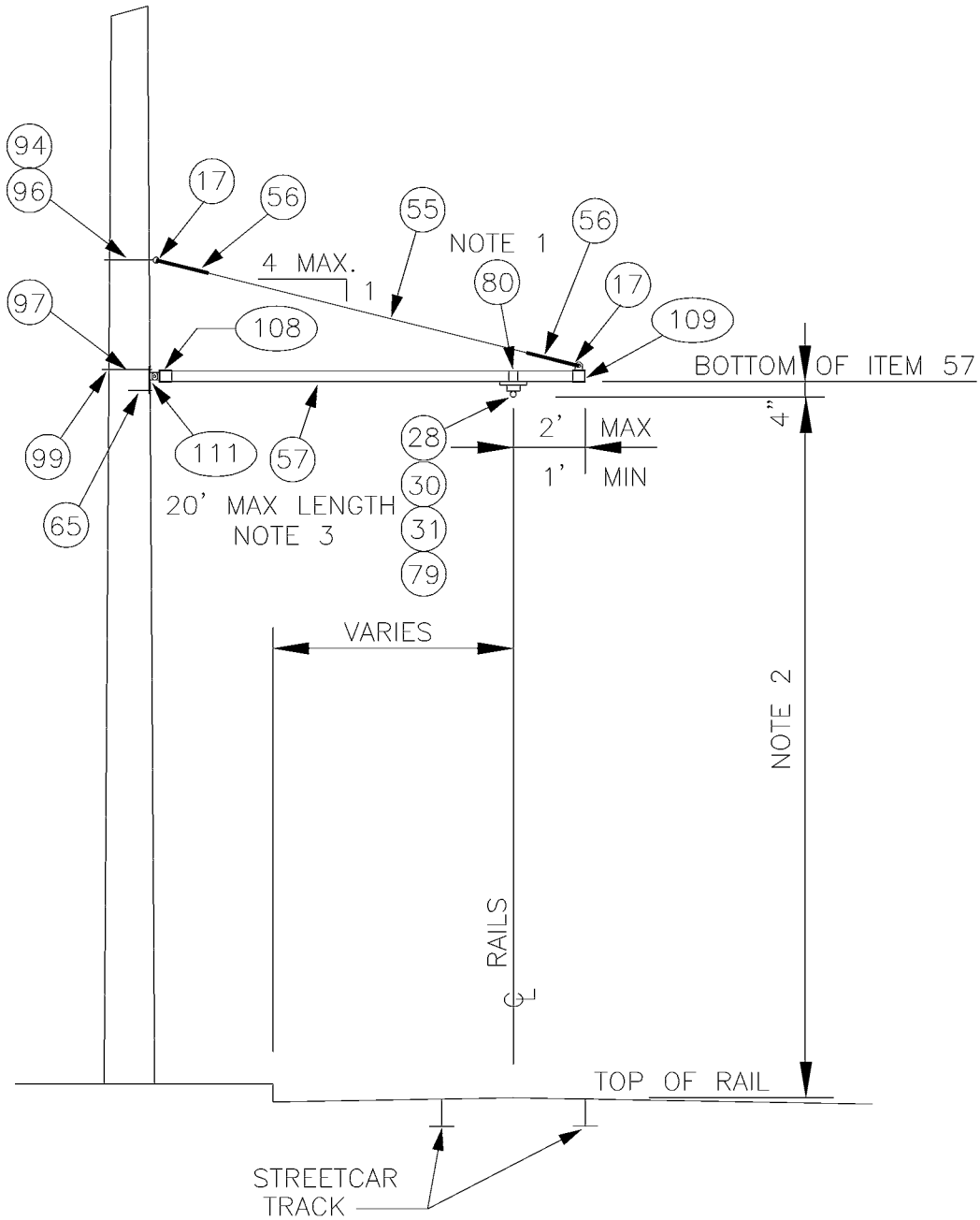

NOTES:

1. STAINLESS STEEL BANDING SHALL BE WRAPPED DOUBLE THICKNESS AROUND ITEM 57 PRIOR TO CLAMPING.
2. SEE SA-164 FOR HORIZONTAL & VERTICAL DIMENSIONS TO TROLLEY WIRE.
3. DRILL 1/2" HOLE IN TUBE TO MATCH HOLE IN ITEMS 108 & 109 FOR INSERTION OF 3/8" SS BOLT.

DESIGNED DPG	CHKD: DOW	King County	DEPARTMENT OF TRANSPORTATION WATERFRONT STREETCAR	DATE: FEB 98
DR: MM	SCALE: NONE		WOOD POLE BRACKET ASSEMBLY TANGENT CONSTRUCTION	FILE
RECOM.	CONTRACT:			DWG. NO. SA-551
APPROVED				SHT 1 OF 2

V:\Library & Standards\Standards\Trolley\Details\SA-551.1-2.dwg, SA-551.1, 1/5/2007 12:37:59 PM

MATERIAL LIST

ITEM #	QTY	DESCRIPTION	MANUFACTURER	CAT. NO.
17	2	THIMBLE, 1/2" XHD, OPEN	CROSBY	G414
28	1	INSULATOR SPOOL	WABCO	16835-2000
30	1	TROLLEY SUPPORT-LARGE PIPE ARMS	WABCO	54940-4001
31	1	SPRING DETROIT CLAMP	WABCO	54959-3001
55	VARIES	PHILLYSTRAN (3/8")	PHILLYSTRAN INC.	HPTG 6700I
56	2	PHILLYSTRAN BIG GRIP	PHILLYSTRAN INC.	PLP 2755
57	VARIES	FIBERGLASS REINFORCED PLASTIC (FRP) TUBE 3 1/2" Ø X 1/2"	MORRISON MOLDED FG	EXTREN SERIES 525
65	1	LAG SCREW, FETTER DRIVE, 1/2"X 4"	JOSLYN	J8754
79	1	5/8"-11 UNC X 1 3/8" STUD		
80	VARIES	3/4" STAINLESS STEEL BANDING	BAND-IT	TYPE 201
94	1	5/8" OVAL EYEBOLT W/ NUT	JOSLYN	J94XX
96	1	SQ CURVED WASHER 3" X 3" X 1/4", 11/16" DIA	JOSLYN	J113
97	1	3/4" MACHINE BOLT	JOSLYN	J89XX
99	1	SQ CURVED WASHER 3" X 3" X 1/4", 13/16" DIA	JOSLYN	J6823
108	1	MAST ARM POLE END CAP	METRO STD	SA-108
109	1	MAST ARM ARM END CAP	METRO STD	SA-109
111	1	WOOD POLE MOUNTING BRACKET	METRO STD	SA-111

DESIGNED: DPG	CHKD: DOW	King County	DEPARTMENT OF TRANSPORTATION WATERFRONT STREETCAR	DATE: FEB 98
DR: MM	SCALE: NONE			FILE
RECOM.	CONTRACT:		WOOD POLE BRACKET ASSEMBLY TANGENT CONSTRUCTION	DWG. NO. SA-551
APPROVED				SHT 2 OF 2

V:\Library & Standards\Standards\Trolley\Details\SA-551.1-2.dwg, SA-551.2, 1/5/2007 12:38:06 PM

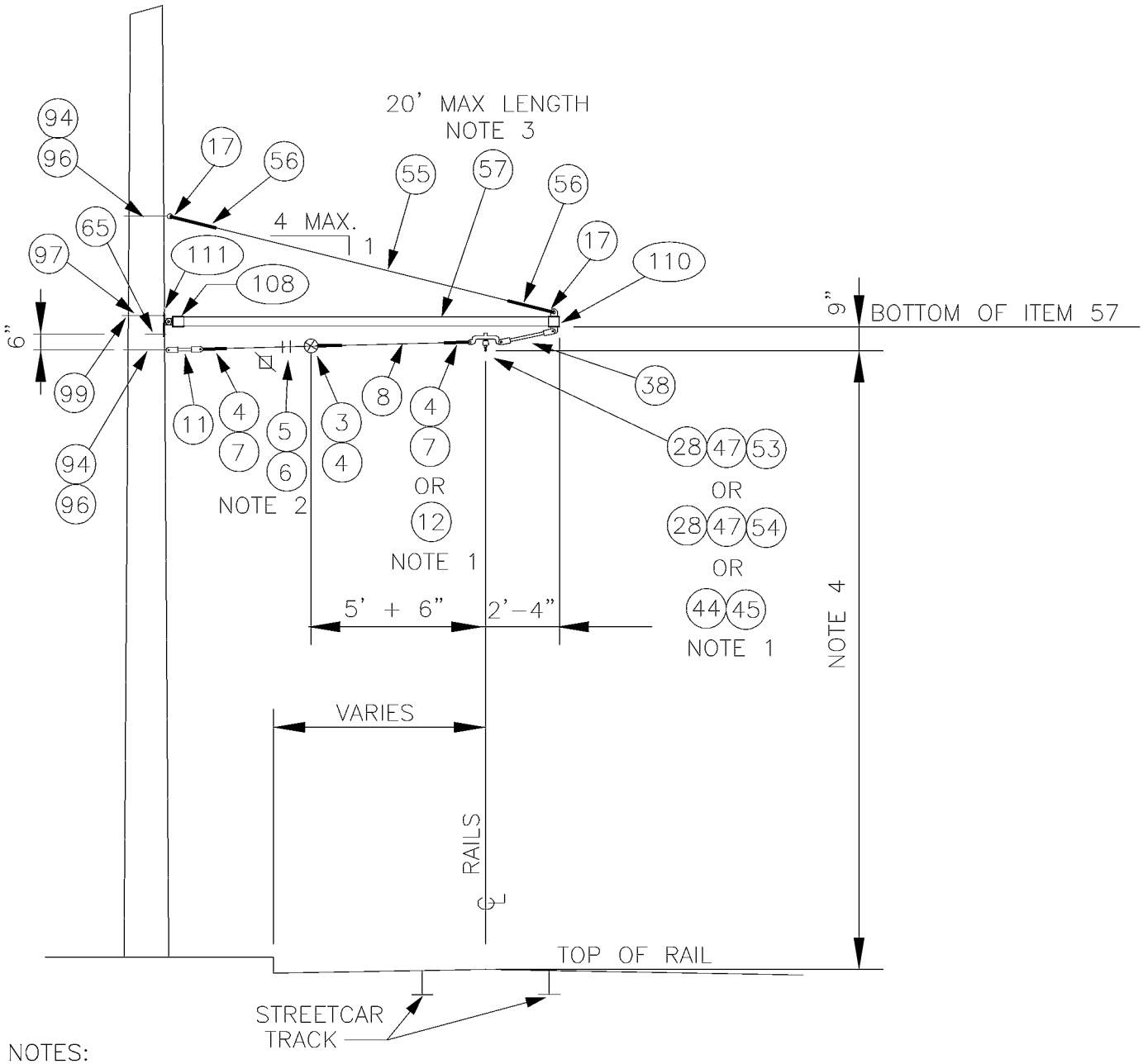

NOTES:

1. ITEMS 4,7,28,50 & 53 TO BE USED FOR 1° TO 5° ANGLE TURN. ITEMS 4, 7,28,47 & 54 TO BE USED FOR 5° TO 7.5° ANGLE TURN. ITEMS 12,44, & 45 TO BE USED FOR 8° OR GREATER ANGLE TURN. SEGMENTS SHALL NOT BE USED FOR ANGLES GREATER THAN 12° WHEN POLE IS ON INSIDE OF CURVE.
2. PROVIDE TENSION ADJUSTMENT POINTS AT LOCATIONS INDICATED BY "⧄". PROVIDE WIRE ROPE CLIPS AT THESE LOCATIONS. SEE SA-166.
3. DRILL 1/2" HOLE IN TUBE TO MATCH HOLE IN ITEMS 108 & 109 FOR INSERTION OF 3/8" SS BOLT.
4. SEE SA-164 FOR HORIZONTAL & VERTICAL DIMENSIONS TO TROLLEY WIRE.

DESIGNED DPG	CHKD: DOW	King County	DEPARTMENT OF TRANSPORTATION WATERFRONT STREETCAR	DATE: FEB 98
DR: MM	SCALE: NONE			FILE
RECOM.	CONTRACT:		WOOD POLE BRACKET ASSEMBLY CURVE CONSTRUCTION	DWG. NO. SA-552
APPROVED				SHT 1 OF 2

V:\Library & Standards\Standards\Trolley\Details\SA-552.1-2.dwg, SA-552.1, 1/5/2007 12:38:12 PM

MATERIAL LIST

ITEM #	QTY	DESCRIPTION	MANUFACTURER	CAT. NO.
03	1	GUY STRAIN INSUL	PORCELAIN PRODUCTS CO.	504
04	VARIES	GUY GRIP DEADEND	PREFORMED	CDE-3106
05	2	WIRE ROPE CLIP, 5/16"	CROSBY	G450
06	AS REQD	FRICTION TAPE, 3/4" (6 WRAPS)		
07	VARIES	THIMBLE, 3/8" XHD, OPEN	CROSBY	G414
08	VARIES	GUY STRAND	COPPERWELD	8M
11	1	7/8 TRANSLITE STRAIN INSUL CL-CL	WABCO	54975-6120
12	VARIES	7/8 TRANSLITE STRAIN INSUL CL-EYE	WABCO	55339-6120
17	2	THIMBLE, 1/2" XHD, OPEN	CROSBY	G414
28	VARIES	INSULATOR SPOOL	WABCO	16835-2000
38	1	7/8 TRANSLITE STRAIN INSUL CL-CL	WABCO	54975-6200
44	VARIES	RUNNER, 6 FT TYPE C, 8 TO 12 DEG	WABCO	21375-2000
45	VARIES	PLATE-STRAIN 5 TO 12 DEG	WABCO	20290-2000
47	VARIES	DOUBLE CURVE HANGER TYPE A-2	WABCO	14073-2000
53	VARIES	CURVE RAIL	K & M	851 B412/0
54	VARIES	CURVE RAIL	K & M	851 B412/1
55	VARIES	PHILLYSTRAN (3/8")	PHILLYSTRAN INC.	HPTG 6700I
56	2	PHILLYSTRAN BIG GRIP	PHILLYSTRAN INC.	PLP 2755
57	VARIES	FIBERGLASS REINFORCED PLASTIC (FRP) TUBE 3 1/2" Ø X 1/2"	MORRISON MOLDED FG	EXTREN SERIES 525
65	1	LAG SCREW, FETTER DRIVE, 1/2"X 4"	JOSLYN	J8754
94	2	5/8" OVAL EYEBOLT W/ NUT	JOSLYN	J94XX
96	2	SQ CURVED WASHER 3" X 3" X 1/4", 11/16" DIA	JOSLYN	J113
97	1	3/4" MACHINE BOLT	JOSLYN	J89XX
99	1	SQ CURVED WASHER 3" X 3" X 1/4", 13/16" DIA	JOSLYN	J6823
108	1	MAST ARM POLE END CAP	METRO STD	SA-108
110	1	MAST ARM UNDERSLING END CAP	METRO STD	SA-110
111	1	WOOD POLE MOUNTING BRACKET	METRO STD	SA-111

DESIGNED DPG	CHKD: DOW	King County	DEPARTMENT OF TRANSPORTATION WATERFRONT STREETCAR	DATE: FEB 98
DR: TMB	SCALE: NONE			FILE
RECOM.	CONTRACT:		WOOD POLE BRACKET ASSEMBLY CURVE CONSTRUCTION	DWG. NO. SA-552
APPROVED				SHT 2 OF 2

V:\Library & Standards\Standards\Trolley\Details\SA-552.1-2.dwg, SA-552.2, 1/5/2007 12:38:17 PM

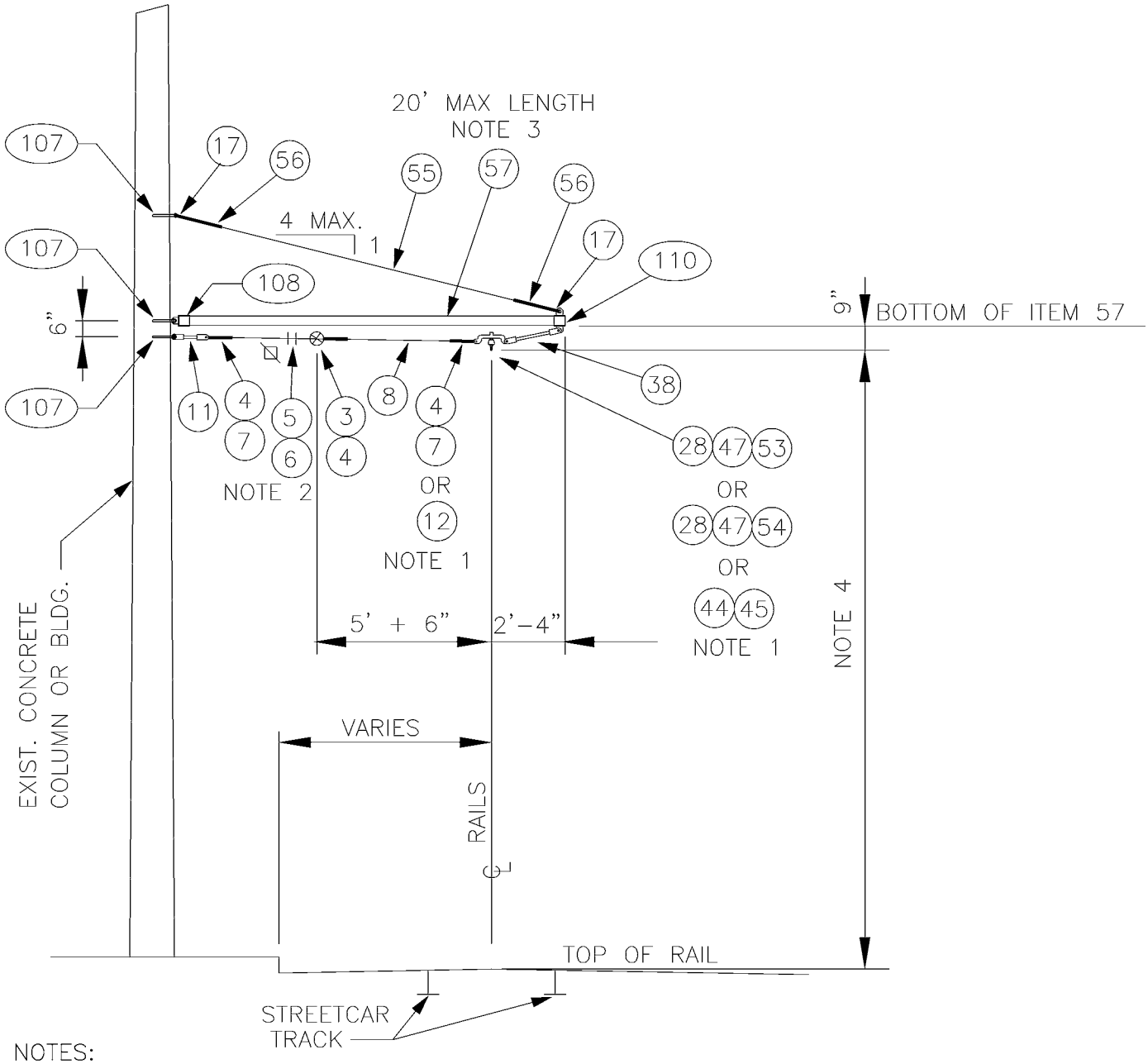

NOTES:

1. ITEMS 4,7,28,50 & 53 TO BE USED FOR 1° TO 5° ANGLE TURN. ITEMS 4, 7,28,47 & 54 TO BE USED FOR 5° TO 7.5° ANGLE TURN. ITEMS 12,44, & 45 TO BE USED FOR 8° OR GREATER ANGLE TURN. SEGMENTS SHALL NOT BE USED FOR ANGLES GREATER THAN 12° WHEN POLE IS ON INSIDE OF CURVE.
2. PROVIDE TENSION ADJUSTMENT POINTS AT LOCATIONS INDICATED BY "⊠". PROVIDE WIRE ROPE CLIPS AT THESE LOCATIONS. SEE SA-166.
3. DRILL 1/2" HOLE IN TUBE TO MATCH HOLE IN ITEMS 108 & 109 FOR INSERTION OF 3/8" SS BOLT.
4. SEE SA-164 FOR HORIZONTAL & VERTICAL DIMENSIONS TO TROLLEY WIRE.

DESIGNED DPG	CHKD: DOW	King County	DEPARTMENT OF TRANSPORTATION WATERFRONT STREETCAR	DATE: JUN 95
DR: MM	SCALE: NONE		CONCRETE ATTACHMENT BRACKET ASSEMBLY CURVE CONSTRUCTION	FILE
RECOM.	CONTRACT:			DWG. NO. SA-553
APPROVED				SHT 1 OF 2

V:\Library & Standards\Standards\Trolley\Details\SA-553.1-2.dwg, SA-553.1, 1/5/2007 12:38:23 PM

MATERIAL LIST

ITEM #	QTY	DESCRIPTION	MANUFACTURER	CAT. NO.
03	1	GUY STRAIN INSUL	PORCELAIN PRODUCTS CO.	504
04	VARIES	GUY GRIP DEADEND	PREFORMED	CDE-3106
05	2	WIRE ROPE CLIP, 5/16"	CROSBY	G450
06	AS REQD	FRICTION TAPE, 3/4" (6 WRAPS)		
07	VARIES	THIMBLE, 3/8" XHD, OPEN	CROSBY	G414
08	VARIES	GUY STRAND	COPPERWELD	8M
11	1	7/8 TRANSLITE STRAIN INSUL CL-CL	WABCO	54975-6120
12	VARIES	7/8 TRANSLITE STRAIN INSUL CL-EYE	WABCO	55339-6120
17	2	THIMBLE, 1/2" XHD, OPEN	CROSBY	G414
28	VARIES	INSULATOR SPOOL	WABCO	16835-2000
38	1	7/8 TRANSLITE STRAIN INSUL CL-CL	WABCO	54975-6200
44	VARIES	RUNNER, 6 FT TYPE C, 8 TO 12 DEG	WABCO	21375-2000
45	VARIES	PLATE-STRAIN 5 TO 12 DEG	WABCO	20290-2000
47	VARIES	DOUBLE CURVE HANGER TYPE A-2	WABCO	14073-2000
53	VARIES	CURVE RAIL	K & M	851 B412/0
54	VARIES	CURVE RAIL	K & M	851 B412/1
55	VARIES	PHILLYSTRAN (3/8")	PHILLYSTRAN INC.	HPTG 6700I
56	2	PHILLYSTRAN BIG GRIP	PHILLYSTRAN INC.	PLP 2755
57	VARIES	FIBERGLASS REINFORCED PLASTIC (FRP) TUBE 3 1/2" Ø X 1/2"	MORRISON MOLDED FG	EXTREN SERIES 525
107	3	STAINLESS STEEL EYEBOLT	METRO STD	SA-107
108	1	MAST ARM POLE END CAP	METRO STD	SA-108
110	1	MAST ARM UNDERSLING END CAP	METRO STD	SA-110

NOTES:

1. INSTALL ITEM 107 PER SA-221.

DESIGNED DPG	CHKD: DOW	King County	DEPARTMENT OF TRANSPORTATION WATERFRONT STREETCAR	DATE: OCT 95
DR: TMB	SCALE: NONE		CONCRETE ATTACHMENT BRACKET ASSEMBLY CURVE CONSTRUCTION	FILE
RECOM.	CONTRACT:			DWG. NO. SA-553
APPROVED				SHT 2 OF 2

V:\Library & Standards\Standards\Trolley\Details\SA-553.1-2.dwg, SA-553.2, 1/5/2007 12:38:28 PM

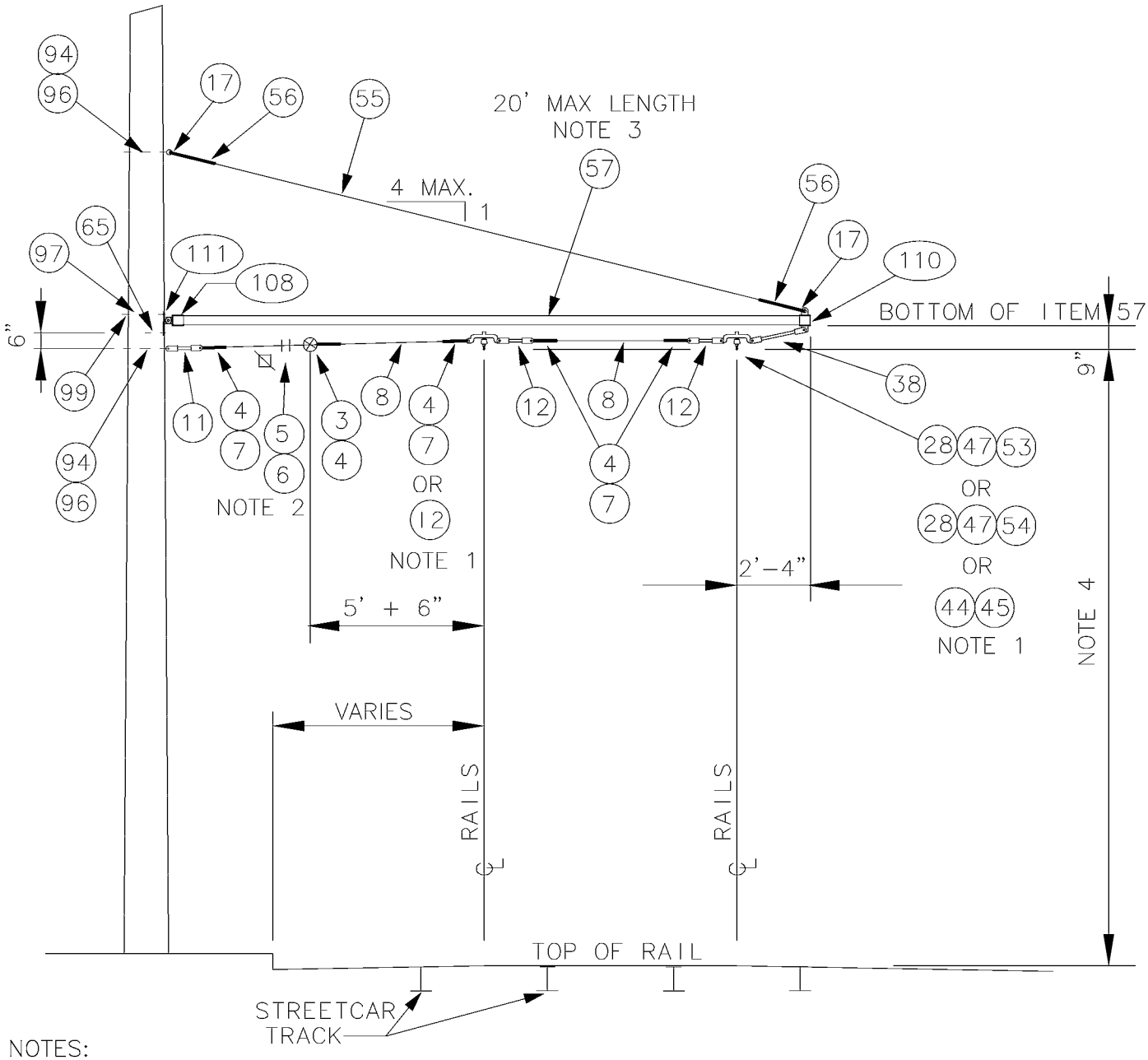

NOTES:

1. ITEMS 4,7,28,50 & 53 TO BE USED FOR 1 TO 5 ANGLE TURN. ITEMS 4, 7,28,47 & 54 TO BE USED FOR 5 TO 7.5 ANGLE TURN. ITEMS 12,44, & 45 TO BE USED FOR 8 OR GREATER ANGLE TURN. SEGMENTS SHALL NOT BE USED FOR ANGLES GREATER THAN 12 WHEN POLE IS ON INSIDE OF CURVE.
2. PROVIDE TENSION ADJUSTMENT POINTS AT LOCATIONS INDICATED BY "⧅". PROVIDE WIRE ROPE CLIPS AT THESE LOCATIONS. SEE SA-166.
3. DRILL 1/2" HOLE IN TUBE TO MATCH HOLE IN ITEMS 108 & 109 FOR INSERTION OF 3/8" SS BOLT.
4. SEE SA-164 FOR HORIZONTAL & VERTICAL DIMENSIONS TO TROLLEY WIRE.

DESIGNED DPG	CHKD: DOW	King County	DEPARTMENT OF TRANSPORTATION WATERFRONT STREETCAR	DATE: JUN 95
DR: MM	SCALE: NONE		WOOD POLE BRACKET ASSEMBLY CURVE CONST (2 TRACKS)	FILE
RECOM.	CONTRACT:			DWG. NO. SA-557
APPROVED				SHT 1 OF 2

V:\Library & Standards\Standards\Trolley\Details\SA-557.1-2.dwg, SA-557.1, 1/5/2007 12:38:34 PM

MATERIAL LIST

ITEM #	QTY	DESCRIPTION	MANUFACTURER	CAT. NO.
03	1	GUY STRAIN INSUL	PORCELAIN PRODUCTS CO.	504
04	VARIES	GUY GRIP DEADEND	PREFORMED	CDE-3106
05	2	WIRE ROPE CLIP, 5/16"	CROSBY	G450
06	AS REQD	FRICTION TAPE, 3/4" (6 WRAPS)		
07	VARIES	THIMBLE, 3/8" XHD, OPEN	CROSBY	G414
08	VARIES	GUY STRAND	COPPERWELD	8M
11	1	7/8 TRANSLITE STRAIN INSUL CL-CL	WABCO	54975-6120
12	VARIES	7/8 TRANSLITE STRAIN INSUL CL-EYE	WABCO	55339-6120
17	2	THIMBLE, 1/2" XHD, OPEN	CROSBY	G414
28	VARIES	INSULATOR SPOOL	WABCO	16835-2000
38	1	7/8 TRANSLITE STRAIN INSUL CL-CL	WABCO	54975-6200
44	VARIES	RUNNER, 6 FT TYPE C, 8 TO 12 DEG	WABCO	21375-2000
45	VARIES	PLATE-STRAIN 5 TO 12 DEG	WABCO	20290-2000
47	VARIES	DOUBLE CURVE HANGER TYPE A-2	WABCO	14073-2000
53	VARIES	CURVE RAIL	K & M	851 B412/0
54	VARIES	CURVE RAIL	K & M	851 B412/1
55	VARIES	PHILLYSTRAN (3/8")	PHILLYSTRAN INC.	HPTG 6700I
56	2	PHILLYSTRAN BIG GRIP	PHILLYSTRAN INC.	PLP 2755
57	VARIES	FIBERGLASS REINFORCED PLASTIC (FRP) TUBE 3 1/2" Ø X 1/2"	MORRISON MOLDED FG	EXTREN SERIES 525
65	1	LAG SCREW, FETTER DRIVE, 1/2"X 4"	JOSLYN	J8754
94	2	5/8" OVAL EYEBOLT W/ NUT	JOSLYN	J94XX
96	2	SQ CURVED WASHER 3" X 3" X 1/4", 11/16" DIA	JOSLYN	J113
97	1	3/4" MACHINE BOLT	JOSLYN	J89XX
99	1	SQ CURVED WASHER 3" X 3" X 1/4", 13/16" DIA	JOSLYN	J6823
108	1	MAST ARM POLE END CAP	METRO STD	SA-108
110	1	MAST ARM UNDERSLING END CAP	METRO STD	SA-110
111	1	WOOD POLE MOUNTING BRACKET	METRO STD	SA-111

V:\Library & Standards\Standards\Trolley\Details\SA-557.1-2.dwg, SA-557.2, 1/5/2007 12:38:40 PM

DESIGNED DPG	CHKD: DOW	King County	DEPARTMENT OF TRANSPORTATION WATERFRONT STREETCAR	DATE: JUN 95
DR: TMB	SCALE: NONE			FILE
RECOM.	CONTRACT:		WOOD POLE BRACKET ASSEMBLY CURVE CONST (2 TRACKS)	DWG. NO. SA-557
APPROVED				SHT 2 OF 2

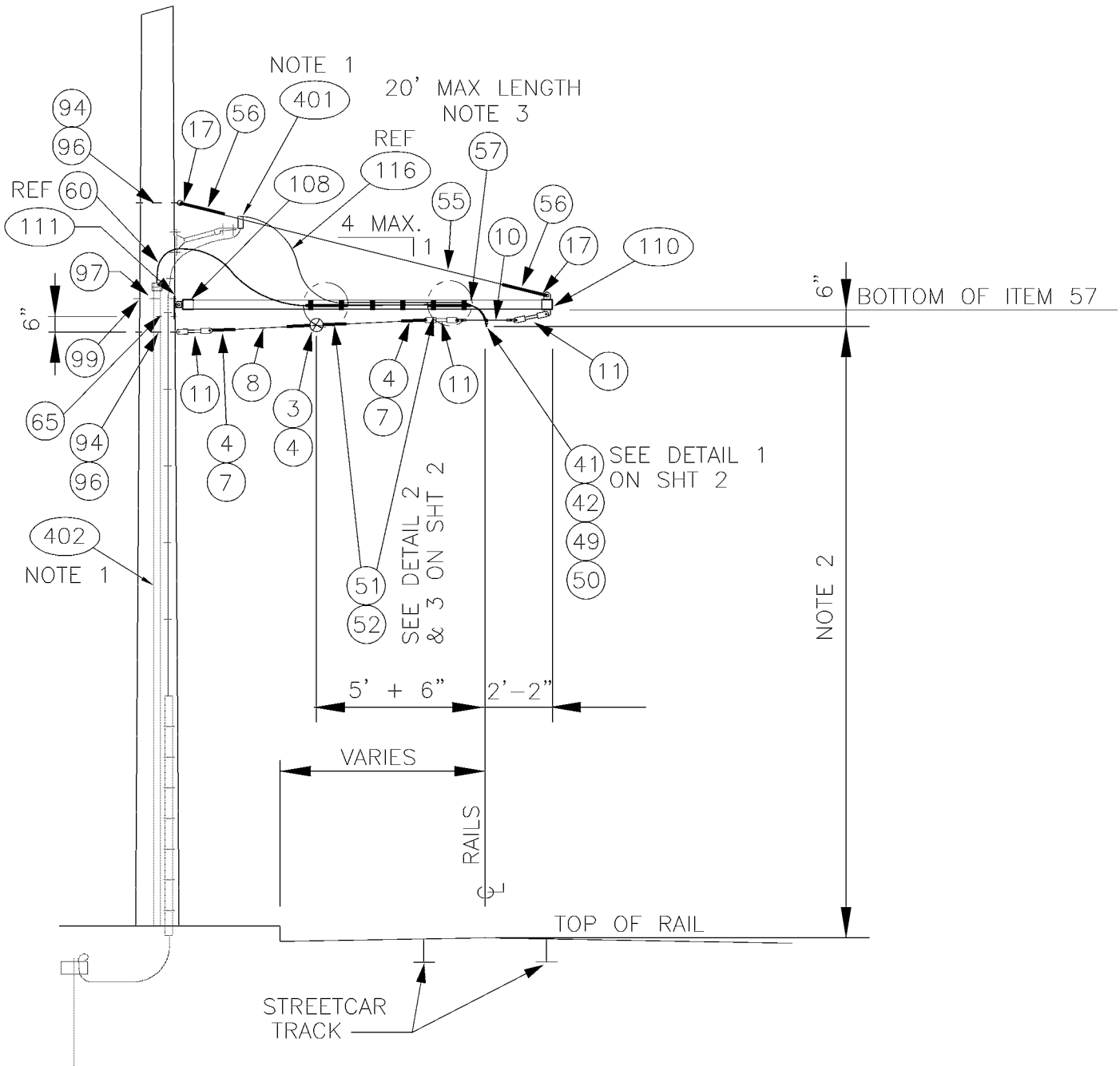

NOTES:

1. 60,116 & 401 SHOWN FOR REFERENCE ONLY, SEE SA-401 & SA-402 FOR DETAILS.
2. SEE SA-164 FOR HORIZONTAL & VERTICAL DIMENSIONS TO TROLLEY WIRE.
3. DRILL 1/2" HOLE IN TUBE TO MATCH HOLE IN ITEMS 108 & 109 FOR INSERTION OF 3/8" SS BOLT.
4. ALL FERROUS METAL SHOULD BE HOT DIP GALV. AFTER FABRICATION.

DESIGNED DPG	CHKD: DOW	King County	DEPARTMENT OF TRANSPORTATION WATERFRONT STREETCAR	DATE: JUN 95
DR: MM	SCALE: NONE			FILE
RECOM.	CONTRACT:		WOOD POLE TANGENT FEEDER BRACKET ASSEMBLY	DWG. NO. SA-559
APPROVED				SHT 1 OF 3

V:\Library & Standards\Standards\Trolley\Details\SA-559.1-3.dwg, SA-559.1, 1/5/2007 12:38:49 PM

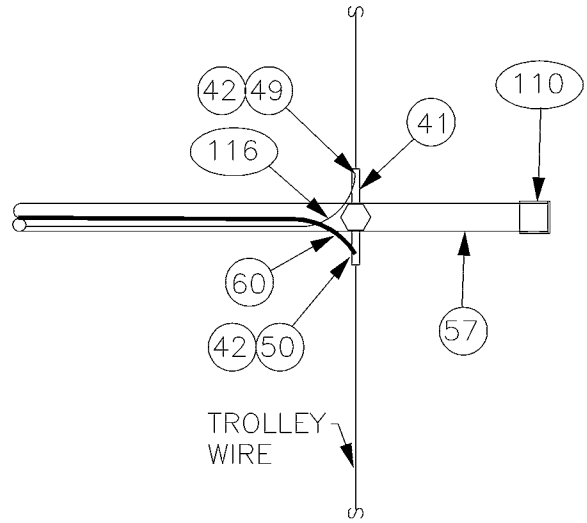

DETAIL 1

POSITIVE FEEDER

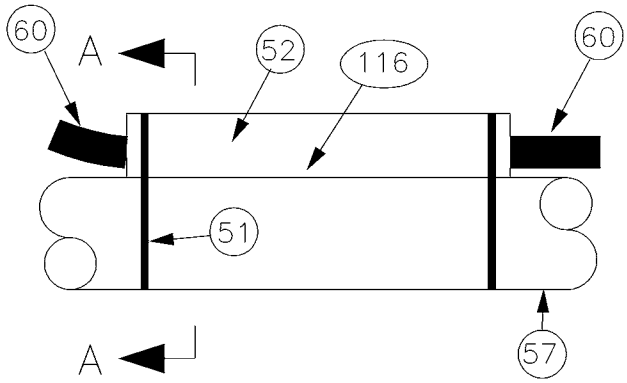

DETAIL 2

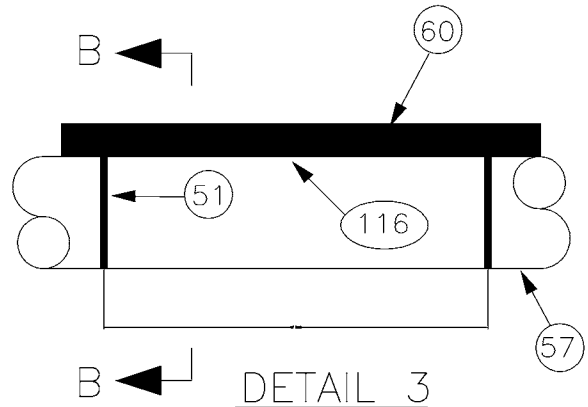

DETAIL 3

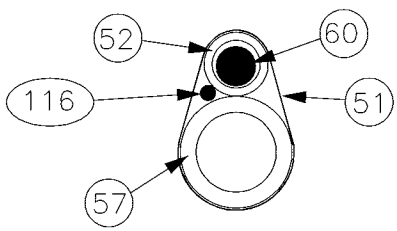

VIEW A–A

POSITIVE FEEDER

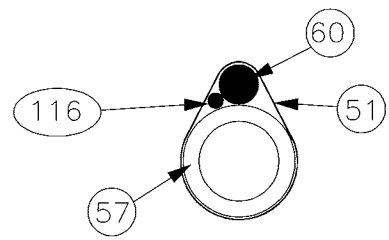

VIEW B–B

POSITIVE FEEDER

DESIGNED DOW	CHKD: DPG	King County	DEPARTMENT OF TRANSPORTATION WATERFRONT STREETCAR	DATE: APR 95
DR: TMB	SCALE: NONE			FILE
RECOM.	CONTRACT:		WOOD POLE TANGENT FEEDER BRACKET ASSEMBLY	DWG. NO. SA–559
APPROVED				SHT 2 OF 3

V:\Library & Standards\Standards\Trolley\Details\SA-559.1-3.dwg, SA-559.2, 1/5/2007 12:38:56 PM

MATERIAL LIST

ITEM #	QTY	DESCRIPTION	MANUFACTURER	CAT. NO.
03	1	GUY STRAIN INSUL	PORCELAIN PRODUCTS CO.	504
04	4	GUY GRIP DEADEND	PREFORMED	CDE-3106
07	2	THIMBLE, 3/8" XHD, OPEN	CROSBY	G414
08	VARIES	GUY STRAND	COPPERWELD	8M
10	1	HI-LITE DOUBLE CURVE HANGER	WABCO	54962-3001
11	3	7/8 TRANSLITE STRAIN INSUL CL-CL	WABCO	54975-6120
17	2	THIMBLE, 1/2" XHD, OPEN	CROSBY	G414
41	1	H.S. FEEDER CLAMP ASSY, BRONZE	WABCO	19879-2000
42	2	FEEDER CLAMP, BRONZE	WABCO	21088-2000
49	1	COMPRESSION CONNECTOR COPPER-LONG BARREL-TIN PLATED-FLARED	ANDERSON/ SQUARE D	VHCL-2/0-12BNF
50	1	COMPRESSION CONNECTOR COPPER-LONG BARREL-TIN PLATED-FLARED	ANDERSON/ SQUARE D	VHCL-500-12BNF
51	AS REQD	MULTI-LOK TIES (18") NYLON COATED	BAND-IT	AE714
52	2 12" PIECES	TUF NEOPRENE AIR HOSE SLEEVE 1.5" ID X 2.0625" OD (BLACK)	MCMASTER-CARR	3 BRAID
55	VARIES	PHILLYSTRAN (3/8")	PHILLYSTRAN INC.	HPTG 6700I
56	2	PHILLYSTRAN BIG GRIP	PHILLYSTRAN INC.	PLP 2755
57	VARIES	FIBERGLASS REINFORCED PLASTIC (FRP) TUBE 3 1/2" Ø X 1/2"	MORRISON MOLDED FG	EXTREN SERIES 525
60	AS REQD	FEED SPAN CABLE		
65	1	LAG SCREW, FETTER DRIVE, 1/2"X 4"	JOSLYN	J8754
94	2	5/8" OVAL EYEBOLT W/ NUT	JOSLYN	J94XX
96	2	SQ CURVED WASHER 3" X 3" X 1/4", 11/16" DIA	JOSLYN	J113
97	1	3/4" MACHINE BOLT	JOSLYN	J89XX
99	1	SQ CURVED WASHER 3" X 3" X 1/4", 13/16" DIA	JOSLYN	J6823
108	1	MAST ARM POLE END CAP	METRO STD	SA-108
110	1	MAST ARM UNDERSLING END CAP	METRO STD	SA-110
111	1	WOOD POLE MOUNTING BRACKET	METRO STD	SA-111
116	VARIES	WIRE, 2 OR 5 KV, #4 AWG CU, JACKETED, UNSHIELDED		

DESIGNED DOW	CHKD: DPW	King County	DEPARTMENT OF TRANSPORTATION WATERFRONT STREETCAR	DATE: OCT 95
DR: TMB	SCALE: NONE			FILE
RECOM.	CONTRACT:		WOOD POLE TANGENT FEEDER BRACKET ASSEMBLY	DWG. NO. SA-559
APPROVED				SHT 3 OF 3

V:\Library & Standards\Standards\Trolley\Details\SA-559.1-3.dwg, SA-559.3, 1/5/2007 12:39:03 PM

A

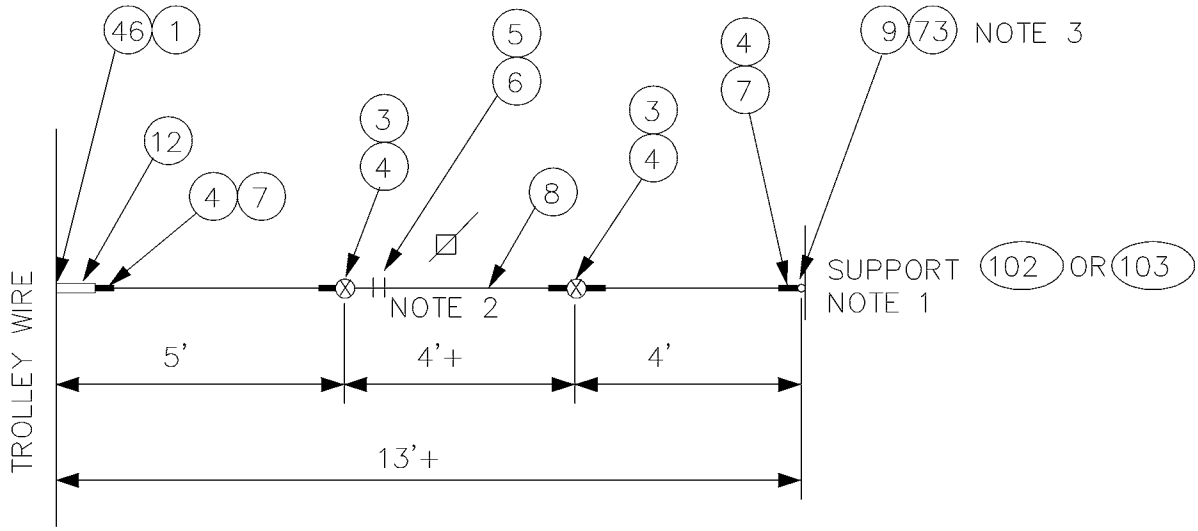

B

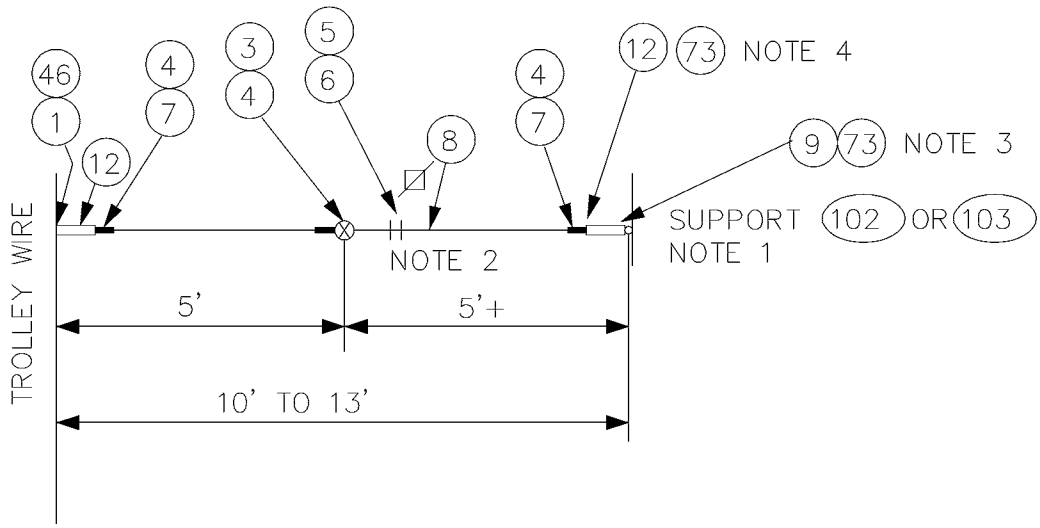

C

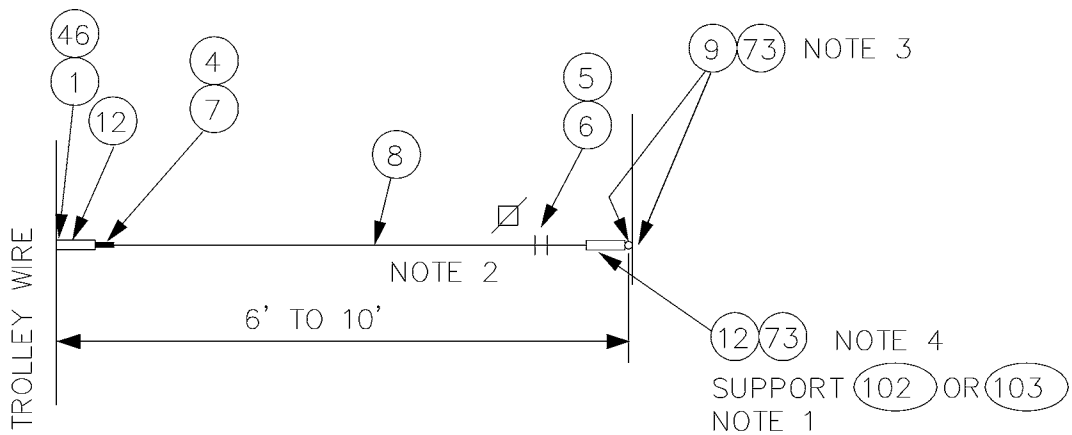

DESIGNED DPG	CHKD: DOW	King County	DEPARTMENT OF TRANSPORTATION WATERFRONT STREETCAR	DATE: JUN 95
DR: TMB	SCALE: NONE			FILE
RECOM.	CONTRACT:		SPECIALWORK PULLOFF	DWG. NO. SA-571
APPROVED				SHT 1 OF 5

V:\Library & Standards\Standards\Trolley\Details\SA-571.1-5.dwg, SA-571.1, 1/5/2007 12:39:12 PM

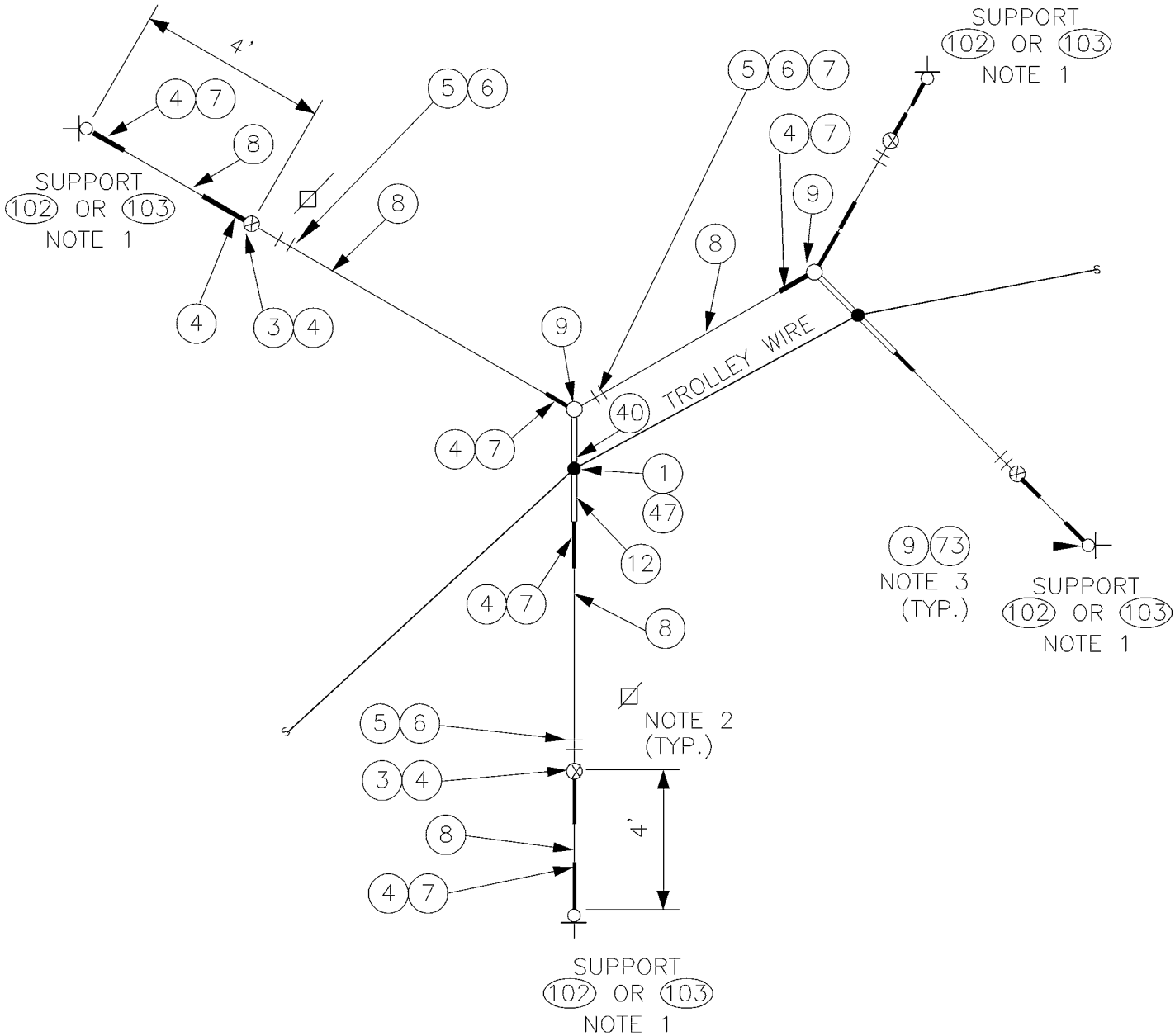

D

DESIGNED DPG	CHKD: DOW	King County	DEPARTMENT OF TRANSPORTATION WATERFRONT STREETCAR	DATE: JUN 95
DR: TMB	SCALE: NONE			FILE
RECOM.	CONTRACT:		SPECIALWORK PULLOFF	DWG. NO. SA–571
APPROVED				SHT 2 OF 5

V:\Library & Standards\Standards\Trolley\Details\SA-571.1-5.dwg, SA-571.2, 1/5/2007 12:39:17 PM

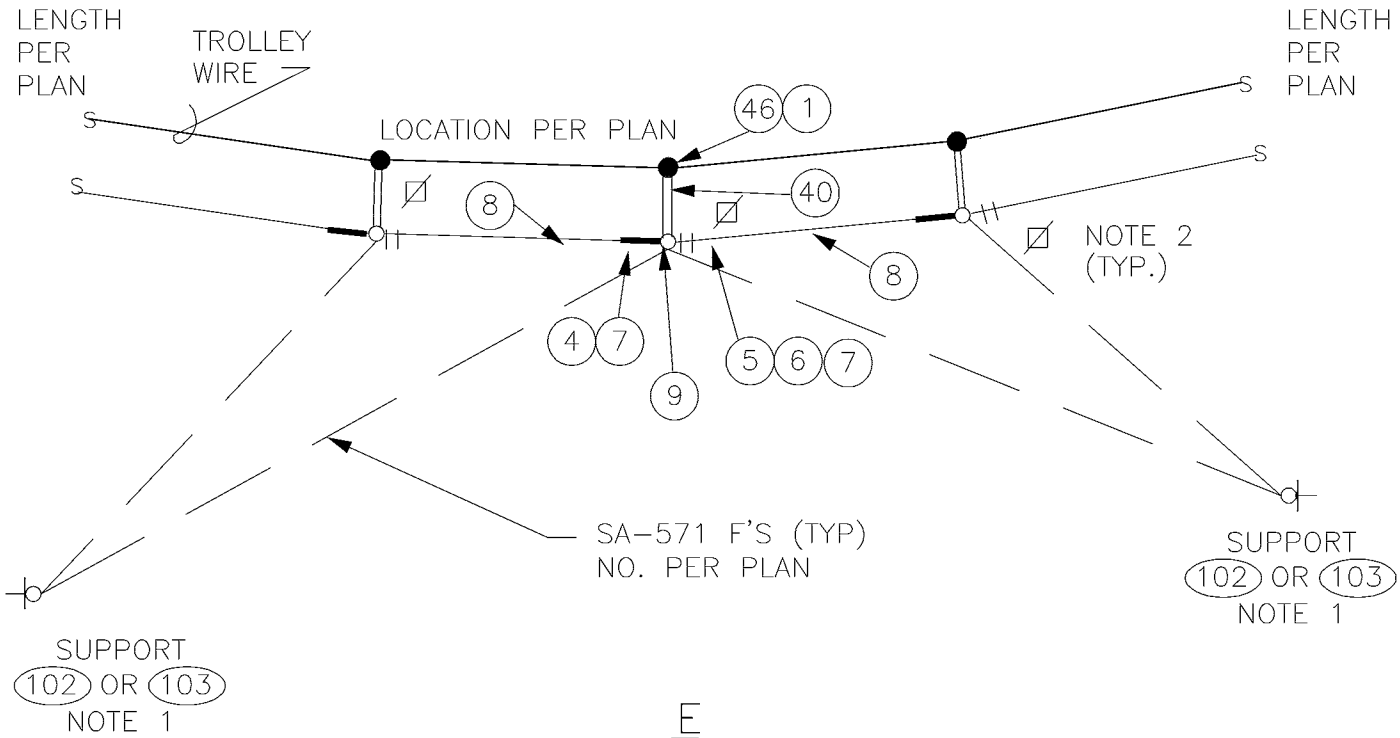

E

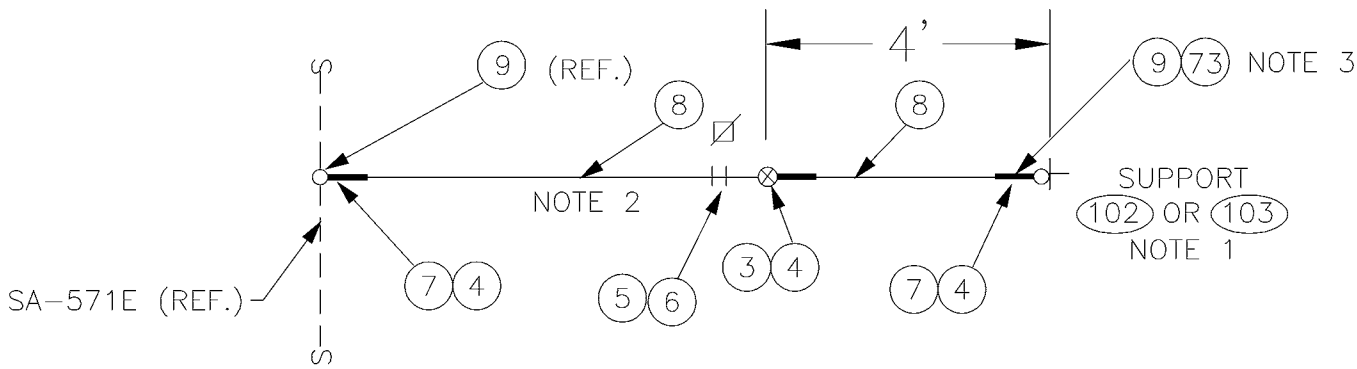

F

DESIGNED DPG	CHKD: DOW	King County	DEPARTMENT OF TRANSPORTATION WATERFRONT STREETCAR SPECIALWORK PULLOFFS	DATE: JUN 95
DR: TMB	SCALE: NONE			FILE
RECOM.	CONTRACT:			DWG. NO. SA-571
APPROVED				SHT 3 OF 5

V:\Library & Standards\Standards\Trolley\Details\SA-571.1-5.dwg, SA-571.3, 1/5/2007 12:39:21 PM

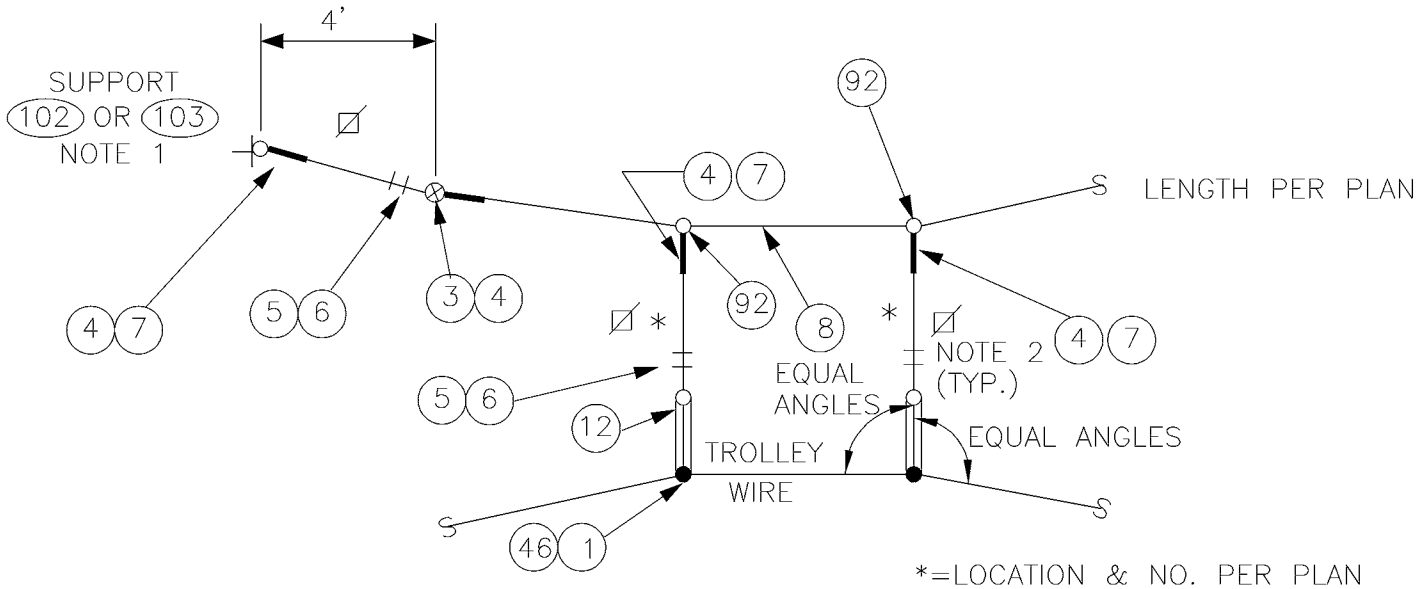

G

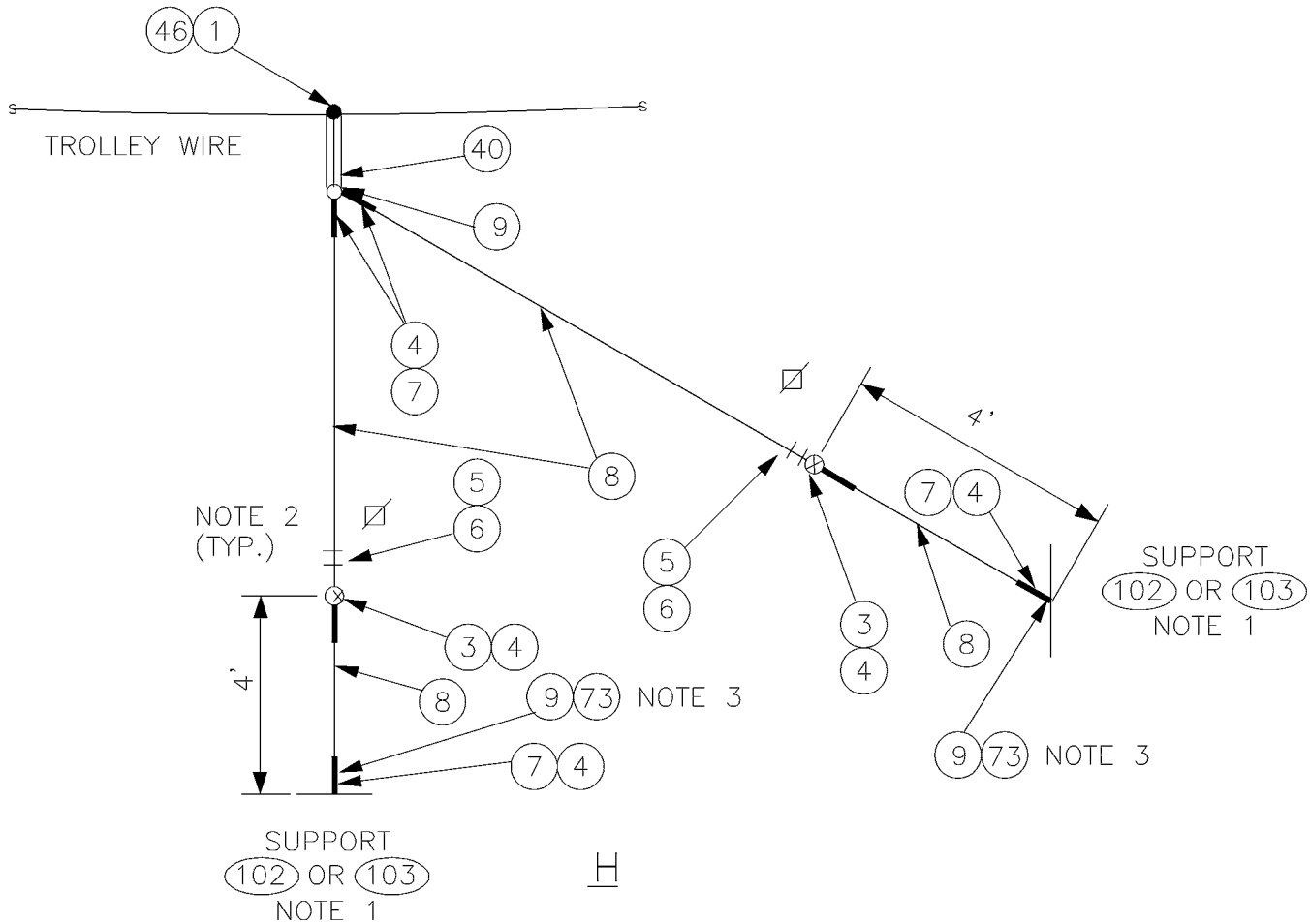

H

DESIGNED DPG	CHKD: DOW	King County	DEPARTMENT OF TRANSPORTATION WATERFRONT STREETCAR	DATE: OCT 95
DR: TMB	SCALE: NONE			FILE
RECOM.	CONTRACT:		SPECIALWORK PULLOFF	DWG. NO. SA-571
APPROVED				SHT 4 OF 5

V:\Library & Standards\Standards\Trolley\Details\SA-571.1-5.dwg, SA-571.4, 1/5/2007 12:39:26 PM

NOTES:

1. A POLE COLLAR OR POLE EYEBOLT IS REQUIRED PER SA-102 OR SA-103 UNLESS A BUILDING EYEBOLT ATTACHMENT IS USED. INSTALLATION HEIGHT TO BE INDICATED AS REQUIRED ON THE OVERHEAD DRAWINGS.

2. PROVIDE TENSION ADJUSTMENT POINTS AT LOCATIONS INDICATED BY "⊠". PROVIDE WIRE ROPE CLIPS AT EACH LOCATION. SEE SA-166.

3. ITEMS 9 & 73 REQUIRED WHEN MORE THAN TWO PULLOFFS AND/OR SPANS ATTACH TO SAME SUPPORT.

4. ITEM 73 REQUIRED WITH ITEM 12 IF SUPPORT IS AN EYEBOLT.

MATERIAL LIST

ITEM #	QTY	DESCRIPTION	MANUFACTURER	CAT. NO.
06	AS REQD	FRICTION TAPE, 3/4" (6 WRAPS)		
09	*	BULL RING	WABCO	18567-2000
12	*	7/8 TRANSLITE STRAIN INSUL CL-EYE	WABCO	55339-6120
40	*	7/8 TRANSLITE STRAIN INSUL CL-90	WABCO	54995-6120
GUY TENSIONS----- 0-3000 LBS				
01	*	DETROIT CLAMP ASSY	WABCO	19293-3007
03	*	GUY STRAIN INSUL	PORCELAIN PRODUCTS CO.	504
04	*	GUY GRIP DEADEND	PREFORMED	CDE-3106
05	*	WIRE ROPE CLIP, 5/16"	CROSBY	G450
07	*	THIMBLE, 3/8" XHD, OPEN	CROSBY	G414
08	VARIES	GUY STRAND	COPPERWELD	8M
46	*	SINGLE CURVE HANGER TYPE A-2	WABCO	14072-2000
47	*	DOUBLE CURVE HANGER TYPE A-2	WABCO	14073-2000
73	*	ANCHOR SHACKLE	JOSLYN	J2742
92	*	ANGLE CLAMP	ANDERSON/ SQUARE D	82860-2000
102	VARIES	FORGED THREE-PIECE ADJUSTABLE POLE BAND, ANNEALED & GALVANIZED	KORTICK MFG CO	
103	VARIES	WOOD POLE EYEBOLT	METRO STD	SA-103

DESIGNED DPG	CHKD: DOW	King County	DEPARTMENT OF TRANSPORTATION WATERFRONT STREETCAR	DATE: OCT 95
DR: TMB	SCALE: NONE			FILE
RECOM.	CONTRACT:		SPECIALWORK PULLOFF	DWG. NO. SA-571
APPROVED				SHT 5 OF 5

V:\Library & Standards\Standards\Trolley\Details\SA-571.1-5.dwg, SA-571.5, 1/5/2007 12:39:31 PM

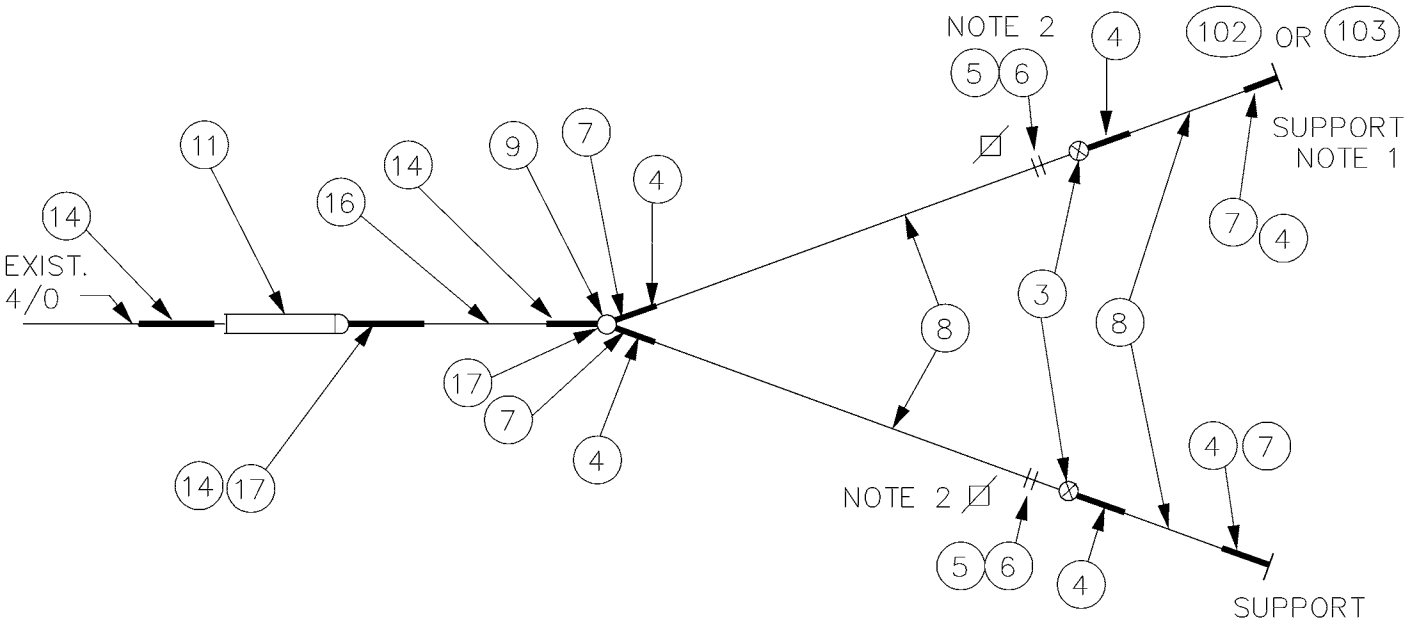

PLAN

DEAD END ASSEMBLY (A)

NOTES

1. A POLE COLLAR OR POLE EYEBOLT IS REQUIRED PER SA-102 OR SA-103 UNLESS A BUILDING EYEBOLT ATTACHMENT IS USED. INSTALLATION HEIGHT IS INDICATED ON THE OVERHEAD DRAWINGS.

2. PROVIDE TENSION ADJUSTMENT POINTS AT LOCATIONS INDICATED BY "⊠". SEE SA-166.

MATERIAL LIST

ITEM #	QTY	DESCRIPTION	MANUFACTURER	CAT. NO.
03	2	GUY STRAIN INSUL	PORCELAIN PRODUCTS CO.	504
04	6	GUY GRIP DEADEND	PREFORMED	CDE-3106
05	4	WIRE ROPE CLIP, 5/16"	CROSBY	G450
06	AS REQD	FRICTION TAPE, 3/4" (6 WRAPS)		
07	4	THIMBLE, 3/8" XHD, OPEN	CROSBY	G414
08	VARIES	GUY STRAND	COPPERWELD	8M
09	1	BULL RING	WABCO	18567-2000
11	1	7/8 TRANSLITE STRAIN INSUL CL-CL	WABCO	54975-6120
14	3	GUY GRIP DEADEND	PREFORMED	CDE-3115
16	VARIES	GUY STRAND	COPPERWELD	16M
17	2	THIMBLE, 1/2" XHD, OPEN	CROSBY	G414
102	VARIES	FORGED THREE-PIECE ADJUSTABLE POLE BAND, ANNEALED & GALVANIZED	KORTICK MFG CO	
103	VARIES	WOOD POLE EYEBOLT	METRO STD	SA-103

DESIGNED: DPG	CHKD: DOW	King County	DEPARTMENT OF TRANSPORTATION WATERFRONT STREETCAR	DATE: OCT 95
DR: TMB	SCALE: NONE			FILE
RECOM.	CONTRACT:		DEAD END ASSEMBLY	DWG. NO. SA-572
APPROVED				SHT 1 OF 2

V:\Library & Standards\Standards\Trolley\Details\SA-572.1-2.dwg, SA-572.1, 1/5/2007 12:39:39 PM

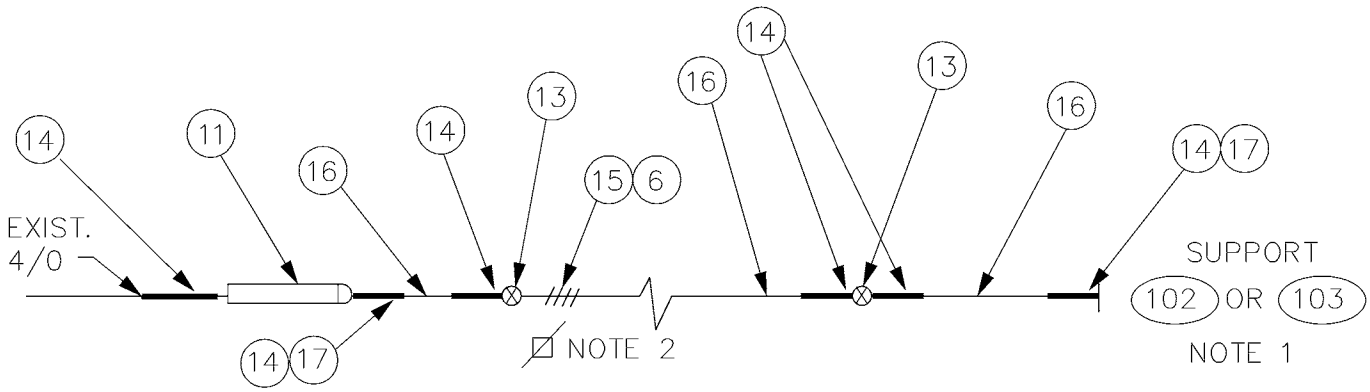

PLAN
DEAD END ASSEMBLY (B)

NOTES

1. A POLE COLLAR OR POLE EYEBOLT IS REQUIRED PER SA-102 OR SA-103 UNLESS A BUILDING EYEBOLT ATTACHMENT IS USED. INSTALLATION HEIGHT IS INDICATED ON THE OVERHEAD DRAWINGS.

2. PROVIDE TENSION ADJUSTMENT POINTS AT LOCATIONS INDICATED BY "⊠". SEE SA-166.

MATERIAL LIST

ITEM #	QTY	DESCRIPTION	MANUFACTURER	CAT. NO.
06	AS REQD	FRICTION TAPE, 3/4" (6 WRAPS)		
11	1	7/8 TRANSLITE STRAIN INSUL CL-CL	WABCO	54975-6120
13	2	GUY STRAIN INSUL	PORCELAIN PRODUCTS CO.	506
14	6	GUY GRIP DEADEND	PREFORMED	CDE-3115
15	4	WIRE ROPE CLIP, 3/8"	CROSBY	G450
16	VARIES	GUY STRAND	COPPERWELD	16M
17	2	THIMBLE, 1/2" XHD, OPEN	CROSBY	G414
102	VARIES	FORGED THREE-PIECE ADJUSTABLE POLE BAND, ANNEALED & GALVANIZED	KORTICK MFG CO	
103	VARIES	WOOD POLE EYEBOLT	METRO STD	SA-103

DESIGNED: DPG	CHKD: DOW	King County	DEPARTMENT OF TRANSPORTATION WATERFRONT STREETCAR	DATE: OCT 95
DR: TMB	SCALE: NONE			FILE
RECOM.	CONTRACT:		DEAD END ASSEMBLY	DWG. NO. SA-572
APPROVED				SHT 2 OF 2

V:\Library & Standards\Standards\Trolley\Details\SA-572.1-2.dwg, SA-572.2, 1/5/2007 12:39:44 PM

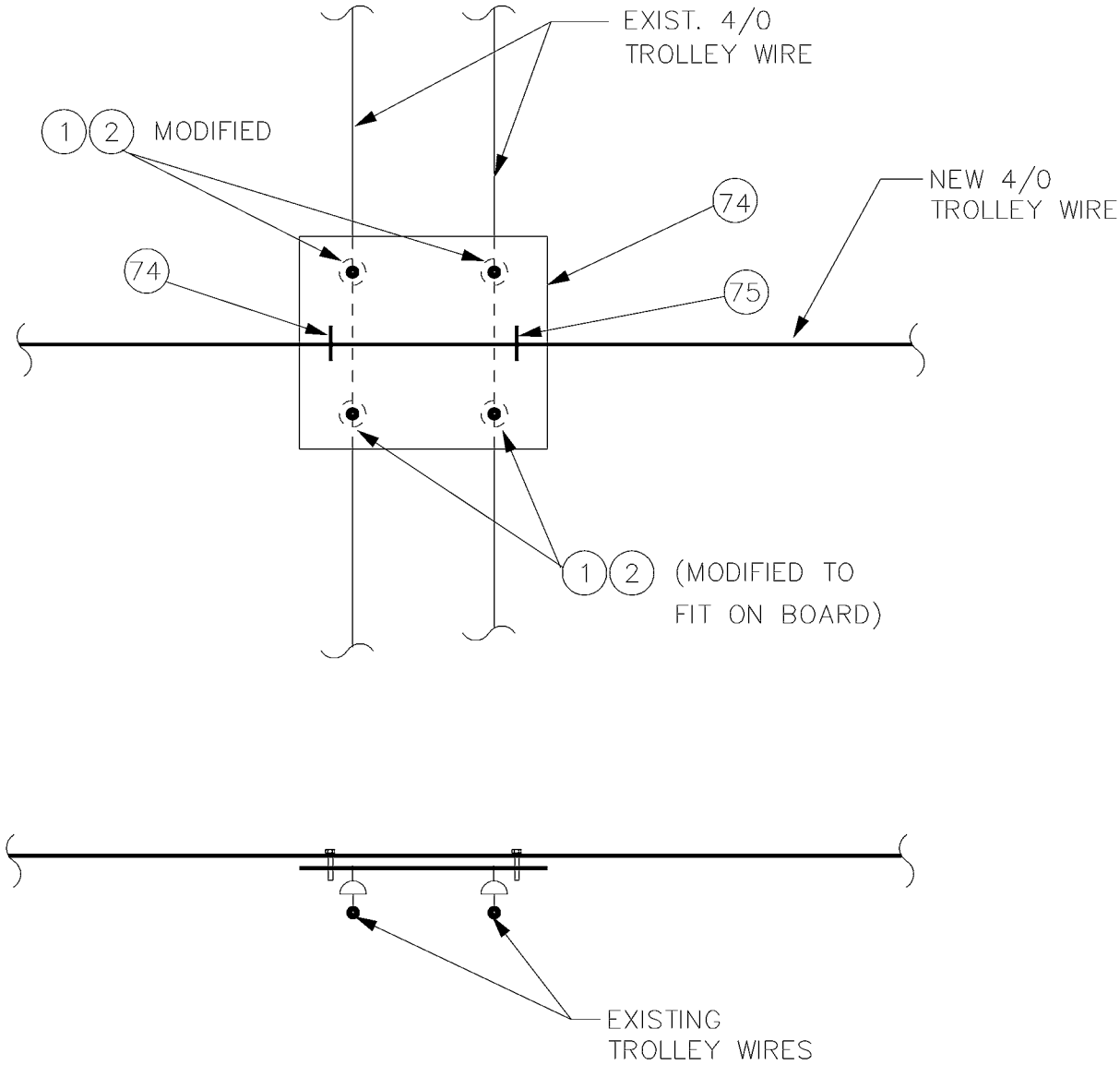

MATERIAL LIST

ITEM #	QTY	DESCRIPTION	MANUFACTURER	CAT. NO.
01	4	DETROIT CLAMP ASSY	WABCO	19293-3007
02	4	AGC TANGENT SPAN HANGER	WABCO	19360-2000
74	1	4 X 4 X 1/2" EXTERIOR PLYWOOD		
75	4	U BOLT, FOR 4/0 TROLLEY WIRE		

DESIGNED: DPG	CHKD: DOW	King County	DEPARTMENT OF TRANSPORTATION WATERFRONT STREETCAR	DATE: JUN 95
DR: TMB	SCALE: NONE			FILE
RECOM.	CONTRACT:		TEMPORARY INSULATION BOARD	DWG. NO. SA-590
APPROVED				SHT 1 OF 1

V:\Library & Standards\Standards\Trolley\Details\SA-590.dwg, SA-590, 1/5/2007 12:39:53 PM