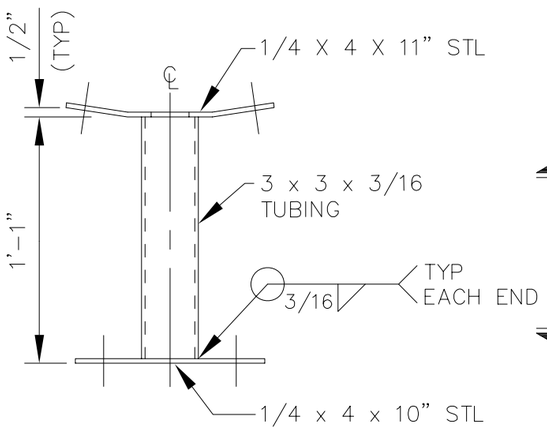

SIDE VIEW

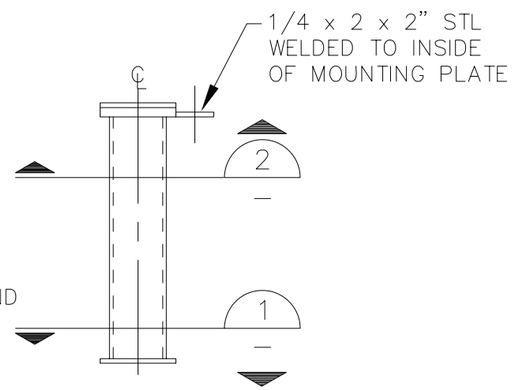

FRONT VIEW

FIXED LEG
SCALE: 1-1/2"=1'-0"

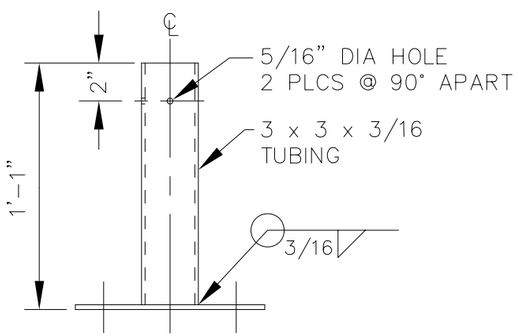

SIDE VIEW

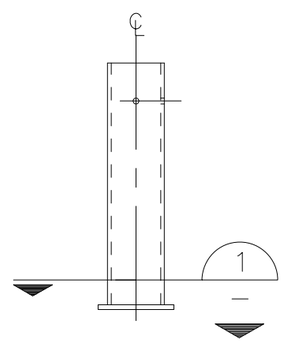

FRONT VIEW

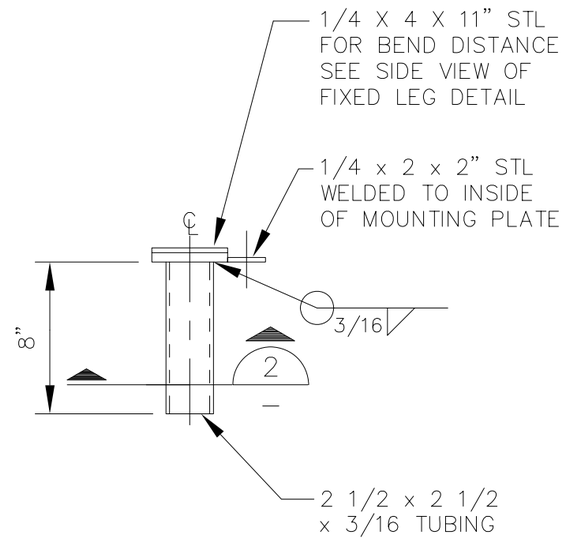

EXTENSION

EXPANDABLE LEG
SCALE: 1-1/2"=1'-0"

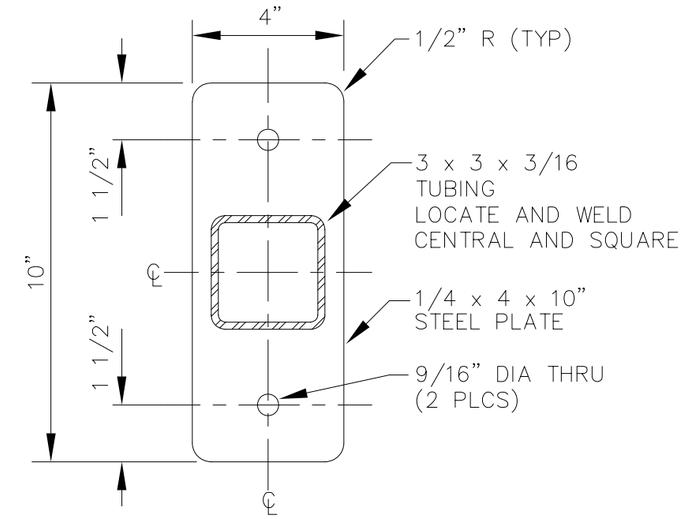

SECTION 1
SCALE: 3"=1'-0"

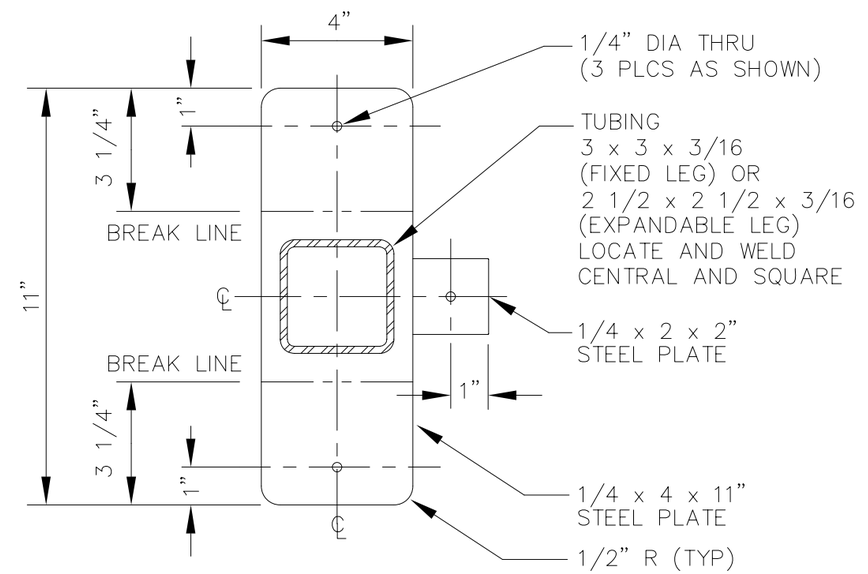

SECTION 2
SCALE: 3"=1'-0"

NOT FOR CONSTRUCTION

King County	DESIGNED PE	Department of Transportation – Transit Division		DATE: MAR 05
	DRA: LSA / CHKD:	SCALE: AS NOTED	FABRICATION AND DELIVERY OF TRANSIT PASSENGER SHELTER FRAMES	FILE
	RECOM. PE	CONTRACT: IFB00-045	BENCH PEDESTAL	DWG. NO. S202
	APPROVED			SHT 8 OF 8

V:\Library & Standards\Standards\PFPMetro\PFP Standard Shelter Structural Set\S202_3-15-05.dwg XREFS: B-FIXED
Dec 02, 2005-10:05:15am By SuterJ