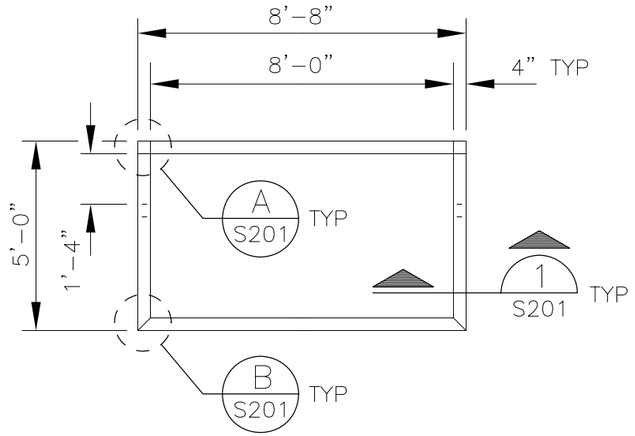

PLAN

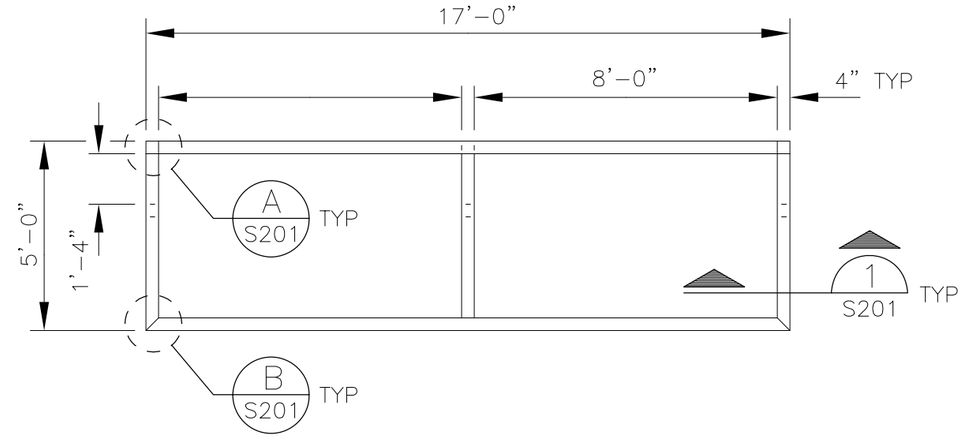

PLAN

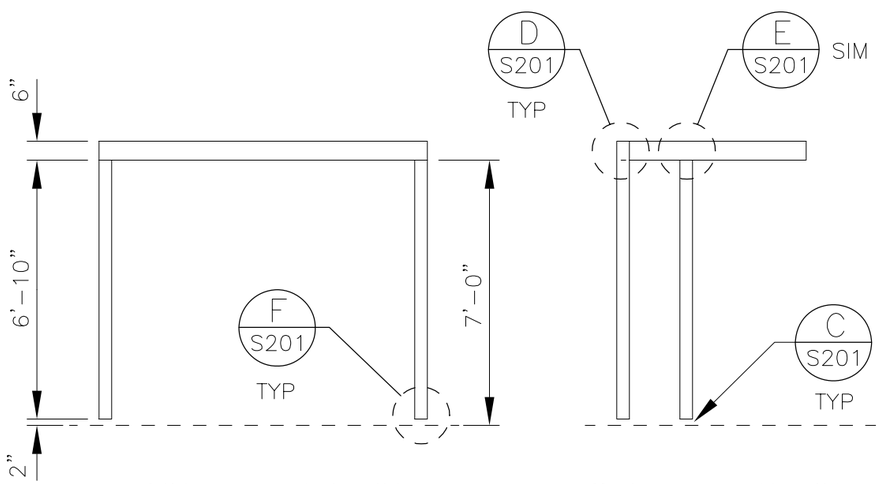

FRONT ELEVATION

SIDE ELEVATION

F51-FRAME

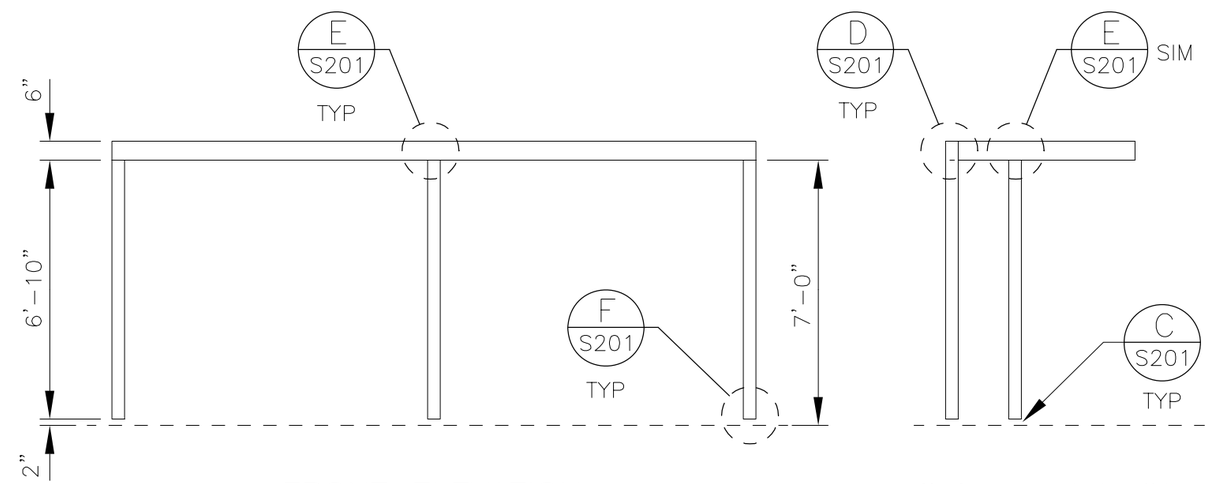

FRONT ELEVATION

SIDE ELEVATION

F52-FRAME

NOT FOR CONSTRUCTION

King County	DESIGNED PE	Department of Transportation – Transit Division		DATE: MAR 05
	DRA: LSA / CHKD:	SCALE: 1/4"=1'-0"	FABRICATION AND DELIVERY OF TRANSIT PASSENGER SHELTER FRAMES	FILE
	RECOM. PE	CONTRACT:	FRAME – SERIES 50 (F51 & F52)	DWG. NO. S105
	APPROVED	IFB00-045		SHT 6 OF 8

V:\Library & Standards\Standards\PFPMetro\PFP Standard Shelter Structural Set\S105_3-15-05.dwg XREFS: B-FIXED
Dec 02, 2005-10:06:14am By SuterJ