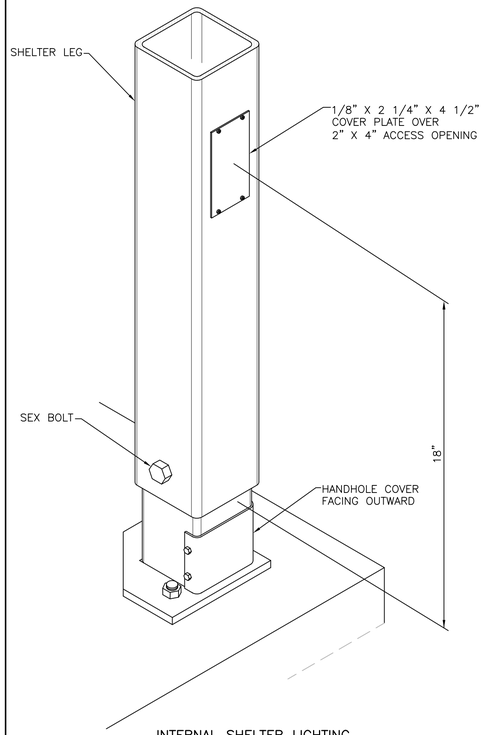

INTERNAL SHELTER LIGHTING
SPECIAL BEARING SHOE INSTALLATION
(FOR INFORMATION ONLY)

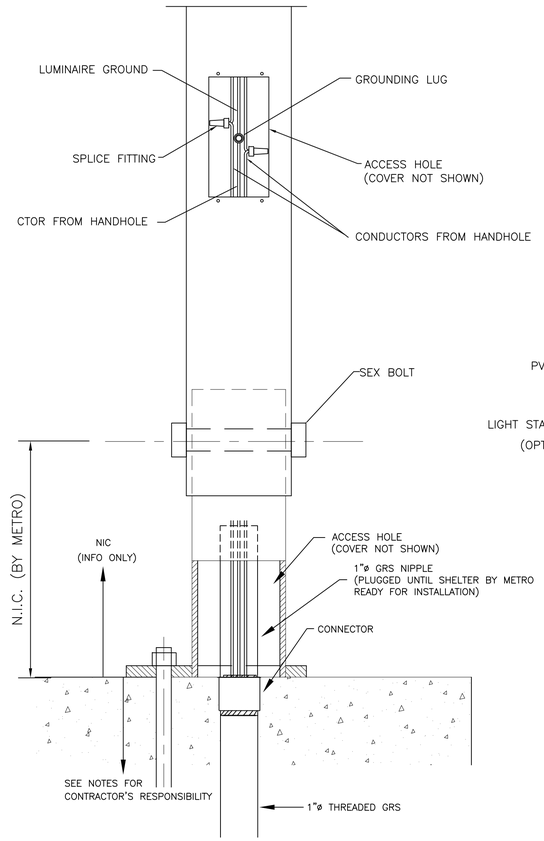

DETAIL "A"
INTERNAL SHELTER LIGHTING
SPECIAL BEARING SHOE INSTALLATION
WIRING DETAILS

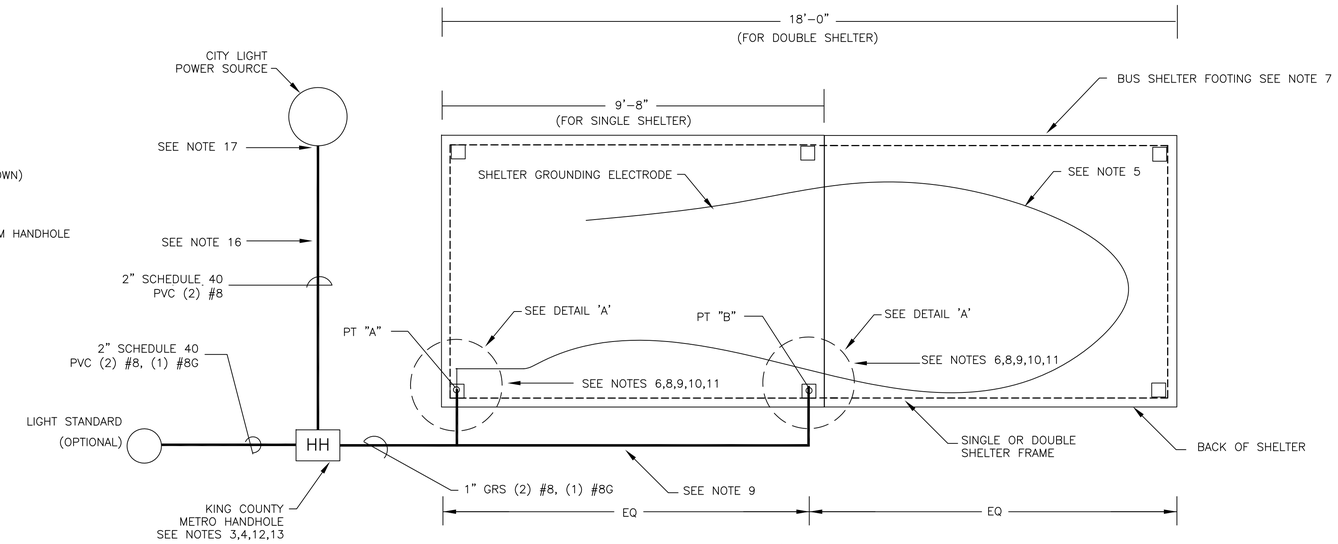

INTERNAL BUS SHELTER LIGHTING DIAGRAM

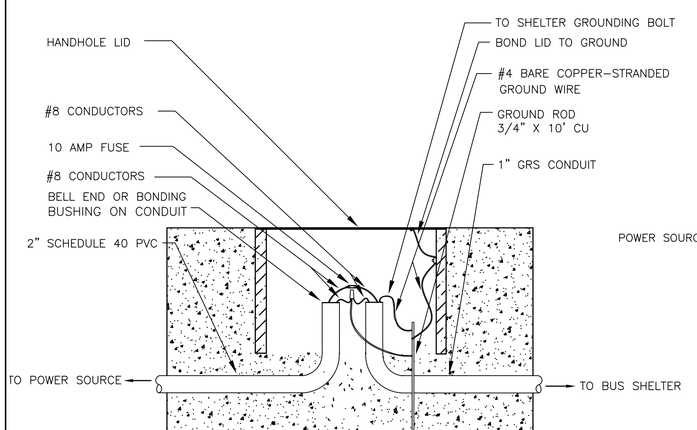

HANDHOLE CONNECTION

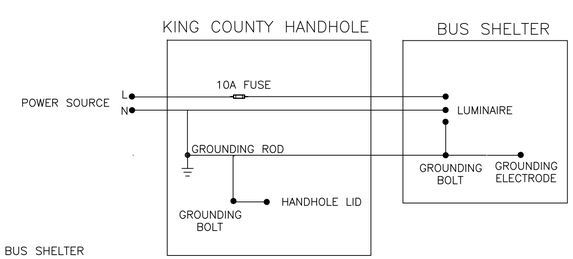

LIGHTING SCHEMATIC

NOTES:

1. ALL NEW CONDUIT INSTALLED UNDERGROUND SHALL HAVE A MINIMUM COVER OF 24 INCHES.
2. THE CONTRACTOR SHALL PLACE 6 INCH WIDE MAGNATEK WARNING TAPE, 12 INCHES BELOW GRADE OVER ALL CONDUIT RUNS.
3. THE CONTRACTOR SHALL PLACE THE NEW J11 TYPE 1 KING COUNTY METRO HANDHOLE IN APPROXIMATION TO THE POWER CONNECTION AND THE LOCATION OF THE BACK SHELTER LEG OF HIGHEST ELEVATION. (THIS WILL NOT ALWAYS BE THE SAME SHELTER LEG).
4. THE CONTRACTOR SHALL PLACE A GROUNDING ROD IN THE KING COUNTY METRO HANDHOLE IN ACCORDANCE WITH NEC 250.53 (G) AND 250.66 (A) AND INSTALL A BELL END OR BONDING BUSHING ON THE CONDUIT. THE CONTRACTOR SHALL BOND ALL METAL PARTS OF THE HANDHOLE TO THE GROUND ROD, PROVIDE SUFFICIENT SLACK IN GROUNDING THE LID TO ALLOW REMOVAL. THE GROUNDED SERVICE CONDUCTOR (NEUTRAL) SHALL ALSO BE BONDED TO THE GROUND ROD. SEE HANDHOLE CONNECTION DETAIL.
5. THE CONTRACTOR SHALL TIE A 23 FOOT #4 COPPER GROUNDING ELECTRODE TO THE SHELTER PAD REBAR.
6. AT THE SHELTER LEG OF HIGHEST ELEVATION THE CONTRACTOR SHALL LEAVE 2 FEET OF THE GROUNDING ELECTRODE ABOVE GROUND AND TUCKED DOWN INTO THE 1" GRS CONDUIT.
7. REFER TO CIVIL SITE PLAN(S) FOR SHELTER FOOTING DIMENSIONS.
8. THE CONTRACTOR SHALL RUN THE CONDUIT FROM THE KING COUNTY METRO HANDHOLE TO THE SHELTER LEG (POINT "A" OR "B") OF HIGHEST ELEVATION. SEE SCHEMATIC DETAIL.
9. ELECTRICAL CONDUIT SHALL ENTER AT ONE OF TWO LEGS (POINT "A" OR "B") AT THE BACK OF THE SHELTER WHERE GROUND ELEVATION IS HIGHER. AT POINT "A", ENTER AT 8 INCHES O.C. FROM FOOTING EDGE. AT POINT "B" ENTER AT 8 INCHES FROM BACK OF SHELTER FOOTING AND FROM THE SIDES.
10. THE CONTRACTOR SHALL STUB UP THE CONDUIT AT THE CENTER OF THE INDICATED SHELTER LEG, WITH A FEMALE THREADED NIPPLE INSTALLED ON THE STUBBED UP END WITH THE TOP OF THE FEMALE THREADED NIPPLE FLUSH WITH FINISHED SURFACE. A THREADED PLUG SHALL BE INSTALLED IN THE TOP OF THE THREADED NIPPLE AT THE TIME OF THE SHELTER PLACEMENT. KING COUNTY FACILITES CREW SHALL REMOVE THE PLUG AND ATTACH A CONNECTOR TO THE CONDUIT EXTENDING UP 2" FROM THE CONNECTION.
11. EPOXY ALL JOINTS TO ENSURE WATER CANNOT ENTER THE CONDUIT THROUGH THE CONNECTION. DO NOT EPROXY THE PLUG.
12. THE CONTRACTOR SHALL LEAVE IN THE KING COUNTY METRO HANDHOLE THE APPROPRIATE LENGTH OF CONDUCTORS TO REACH THE SHELTER LEG OF HIGHEST ELEVATION.
13. KING COUNTY METRO SHALL INSTALL THE FUSE IN THE KING COUNTY METRO HANDHOLE AND CONNECT THE TWO SETS OF CONDUCTORS AT THE 2 INCH BY 4 INCH ACCESS HOLE ON THE SHELTER LEG.
14. KING COUNTY METRO SHALL RUN (2) #8 CONDUCTORS TYPE XHHW THROUGH THE SHELTER FRAME CONNECTING TO THE FIXTURE.
15. KING COUNTY METRO SHALL CONNECT THE FIXTURE GROUND, THE #8 GROUND AND THE GROUNDING ELECTRODE TO THE GROUNDING LUG IN THE SHELTER LEG.
16. THE CONTRACTOR SHALL RUN THE CONDUIT FROM THE KING COUNTY HANDHOLE TO THE CITY LIGHT POWER SOURCE LEAVING 3 FEET OF COILED WIRE AT POWER SOURCE.
17. SEATTLE CITY LIGHT SHALL MAKE THE CONNECTION FOR POWER AT THE SCL HANDHOLE OR POWER POLE, ALL OTHER CONNECTIONS BY THE METRO CREW.

ONE INCH
AT FULL SIZE, IF NOT ONE INCH SCALE ACCORDINGLY

No.	REVISION	BY	APP'D	DATE
△				
△				
△				
△				
△				
△				

THE CONTRACTOR SHALL CONTACT CONSTRUCTION MANAGEMENT FOR INSPECTION (206) 684-2224 OR (206) 947-1574

NOT FOR CONSTRUCTION

DESIGNED: K. WATKINS
CHECKED: C REYNOLDS
DRAWN: K. WATKINS
SCALE: NOT TO SCALE
RECOMMENDED: C REYNOLDS
CONTRACT NO: C00256C07
APPROVED: D CRIPPEN

King County

Department of Transportation - Transit Division
STANDARDS FOR CONSTRUCTION
OF TRANSIT PASSENGER FACILITIES

INTERNAL BUS SHELTER LIGHTING

DATE: OCT 04
FILE NO: D110C
DRAWING NO: D110
SHEET NO: 10 OF 12

V:\Library & Standards\Standards\PFPMetro\PFP Standard Construction Set\D110C.dwg | Layout: D110
PLOTTED: Jan 02, 2008-09:51:05am By: suterj
XREFS:
IMAGES: