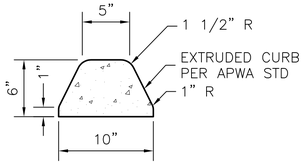

EXTRUDED CURB

DETAIL A
SCALE: 1 1/2"=1'-0"

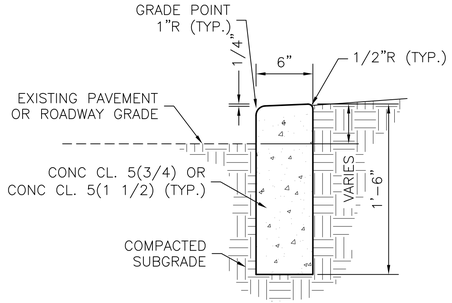

DEEP CURB

SECTION 1
SCALE: 1 1/2"=1'-0"

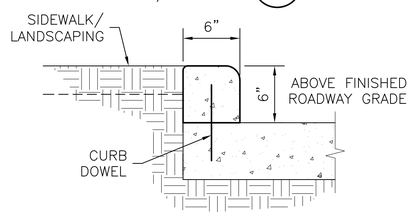

DOWELED CURB

SECTION 2
SCALE: 1 1/2"=1'-0"

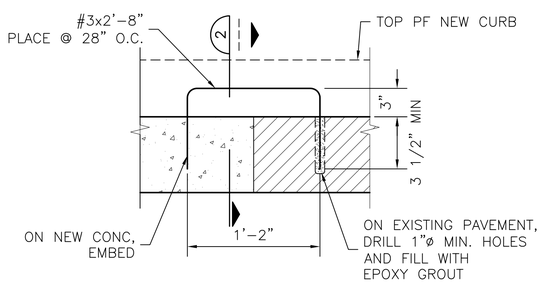

DOWELED CURB

SECTION 3
SCALE: 1 1/2"=1'-0"

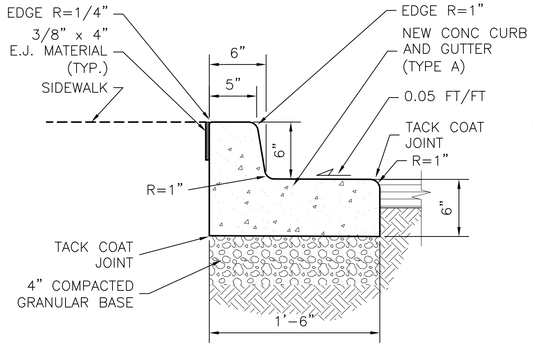

TYPE A CURB

SECTION 4
SCALE: 1 1/2"=1'-0"

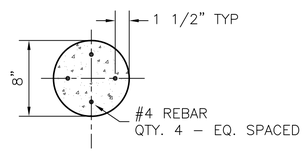

CONCRETE BOLLARD

SECTION 5
SCALE: 1 1/2"=1'-0"

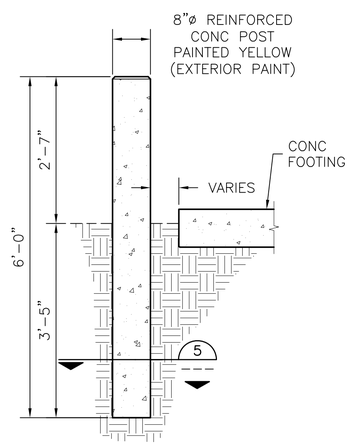

CONCRETE BOLLARD

SECTION 6
SCALE: 3/4"=1'-0"

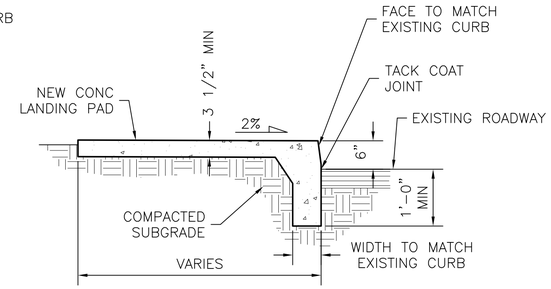

MONOLITHIC SIDEWALK/
LANDING PAD CURB

SECTION 7
SCALE: 3/4"=1'-0"

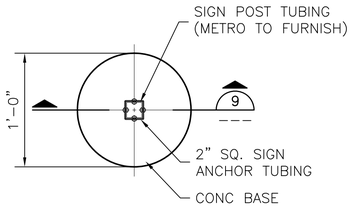

BUS SIGN FOUNDATION

PLAN 8
SCALE: 1 1/2"=1'-0"

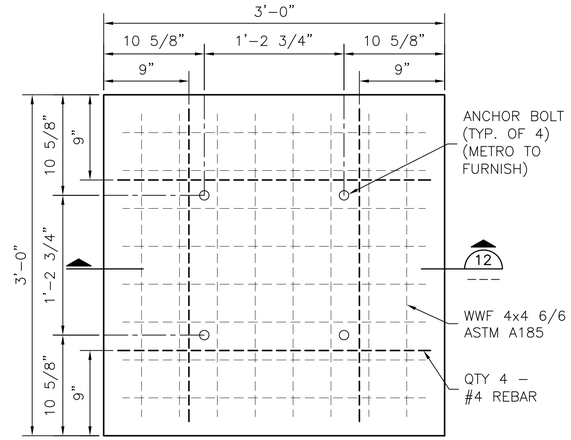

LITTER RECEPTACLE PAD

PLAN 11
SCALE: 1 1/2"=1'-0"

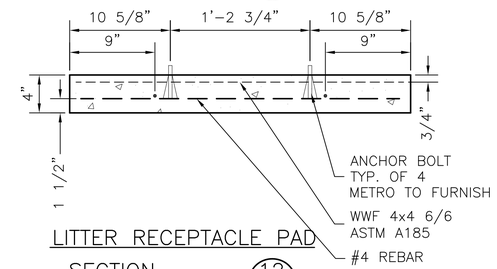

LITTER RECEPTACLE PAD

SECTION 12
SCALE: 1 1/2"=1'-0"

LITTER RECEPTACLE PAD NOTES

1. SAWCUT ASPHALT PAVEMENT, AS REQUIRED, FOR THE CONCRETE PAD.
2. CONCRETE PAD TO BE CAST IN PLACE.
3. CONCRETE PAD TO BE INSTALLED LEVEL AND PARALLEL WITH THE SHELTER FOOTING OR LANDING PAD.

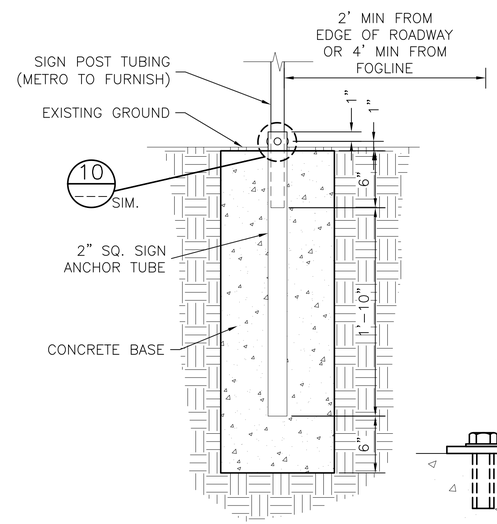

BUS SIGN FOUNDATION

SECTION 9
SCALE: 1 1/2"=1'-0"

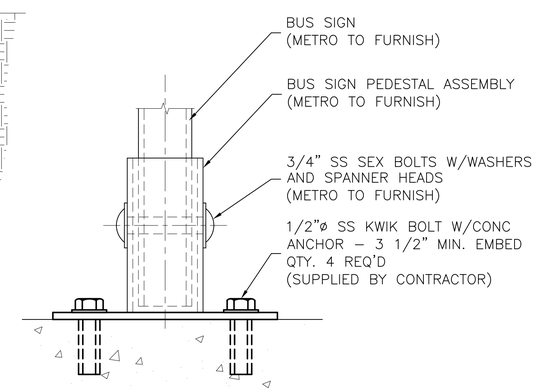

BUS SIGN PEDESTAL MOUNT

SECTION 10
SCALE: HALF SIZE

SIGN POLE NOTES

1. CONCRETE MIX TO BE PER SPECIFICATIONS.
2. METRO WILL PROVIDE NEW ANCHOR TUBING AND DRIVE RIVETS.
3. RESTORE AREA TO ORIGINAL CONDITION.
4. INSTALLATION DETAILS FOR RELOCATION OF STREET SIGNS AND SIGNS OTHER THAN BUS SIGNS SHALL MATCH THE EXISTING INSTALLATION AND STANDARDS.

ONE INCH
AT FULL SIZE, IF NOT ONE INCH SCALE ACCORDINGLY

No.	REVISION	BY	APP'D	DATE

NOT FOR CONSTRUCTION

DESIGNED: C ASQUITH
CHECKED: P ENG
DRAWN: H SCHMITT
SCALE: NOTED
RECOMMENDED: D CRIPPEN
CONTRACT NO: C00256C07
APPROVED: R ISLER

King County

Department of Transportation - Transit Division
STANDARDS FOR CONSTRUCTION
OF TRANSIT PASSENGER FACILITIES

CURB DETAILS, BUS SIGN DETAILS, LITTER RECEPTACLE PAD DETAILS

DATE: JAN 08
FILE NO: D107C
DRAWING NO: D107
SHEET NO: 7 OF 12

V:\Library & Standards\Standards\PFPMetro\PFP Standard Construction Set\D107C.dwg | Layout: D107
PLOTTED: Jan 02, 2008-09:45:55am By suterj
XREFS:
IMAGES: