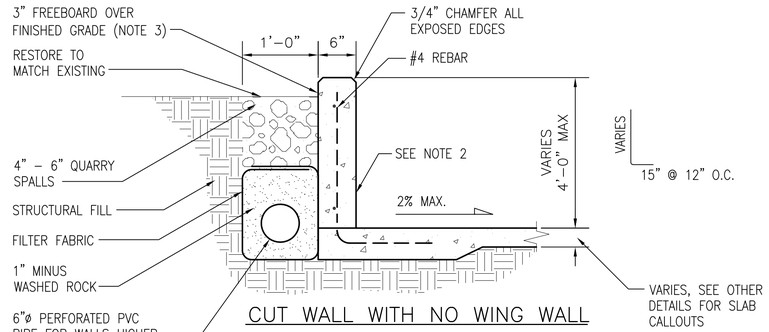

CUT WALL WITH NO WING WALL

SECTION 1

SCALE: 1"=1'-0"

GENERAL WALL NOTES

1. NO DRAINAGE REQUIRED IF WALL IS UNDER 2 FEET HIGH. CONNECT TO EXISTING DRAIN PIPE, IF APPLICABLE. OTHERWISE DAYLIGHT AT FACE OF CURB
2. CONSTRUCT REAR WALL LEVEL FULL LENGTH OF SHELTER FOOTING OR LANDING PAD. TAPER SIDEWALLS TO MEET SITE SLOPE AS SHOWN ON SITE PLAN.
3. RESTORE LANDSCAPING OR SPREAD BEAUTY BARK TO MATCH EXISTING.
4. FLATTER SLOPE MAY BE REQUIRED IN UNSTABLE SOILS AS DIRECTED BY PROJECT REPRESENTATIVE.

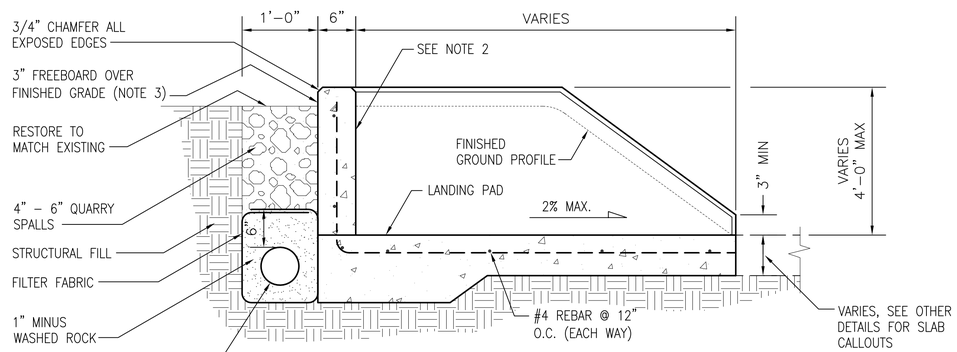

CUT WALL WITH WING WALL

SECTION 2

SCALE: 1"=1'-0"

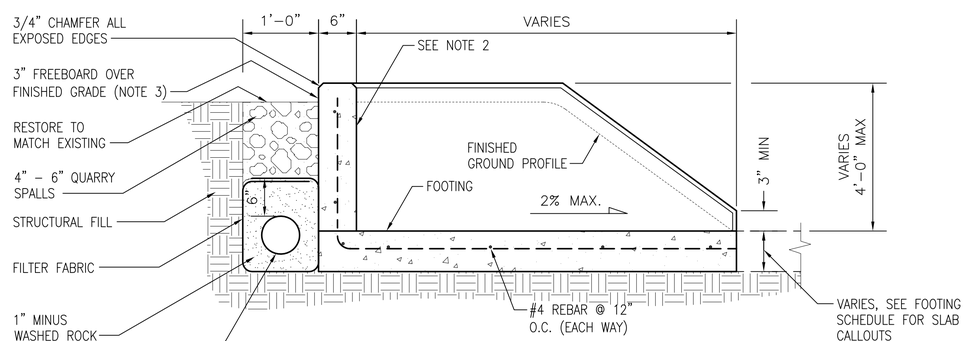

FOOTING WALL WITH WING WALL

SECTION 3

SCALE: 1"=1'-0"

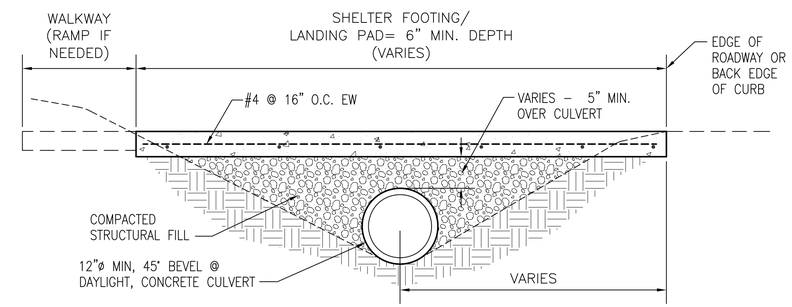

LANDING PAD/SHELTER FOOTING

SECTION 4

SCALE: 1"=1'-0"

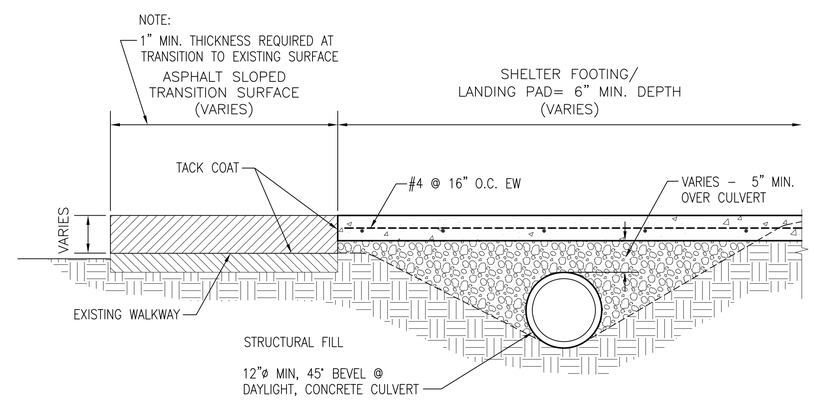

LANDING PAD/SHELTER FOOTING

SECTION 5

SCALE: 1"=1'-0"

ONE INCH

AT FULL SIZE, IF NOT ONE INCH SCALE ACCORDINGLY

No.	REVISION	BY	APP'D	DATE
△				
△				
△				
△				
△				
△				

NOT FOR CONSTRUCTION

DESIGNED: C ASQUITH
CHECKED: P ENG
DRAWN: H SCHMITT
SCALE: NOTED
RECOMMENDED: D CRIPPEN
CONTRACT NO: C00256C07
APPROVED: R ISLER

King County

Department of Transportation - Transit Division

STANDARDS FOR CONSTRUCTION OF TRANSIT PASSENGER FACILITIES

SHELTER FOOTING / LANDING PAD SECTIONS

DATE: JAN 08

FILE NO: D105C

DRAWING NO: D105

SHEET NO: 5 OF 12

V:\Library & Standards\Standards\PFPMetro\PFP Standard Construction Set\D105C.dwg | Layout: D105
PLOTTED: Jan 02, 2008-09:44:28am By: suterj
XREFS:
IMAGES: