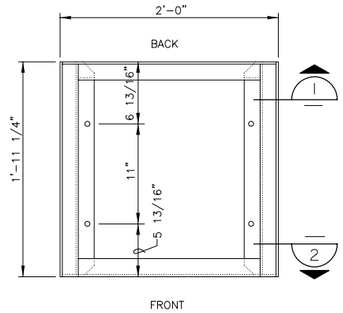

LOWER FRAME
SCALE: 1 1/2"=1'-0"

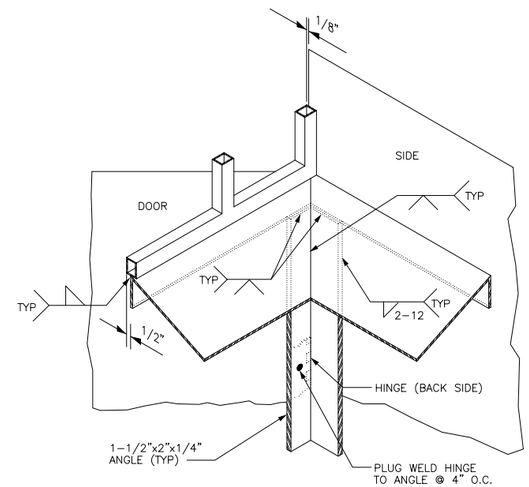

TOP FRONT CORNER
SCALE: 3" = 1'-0"

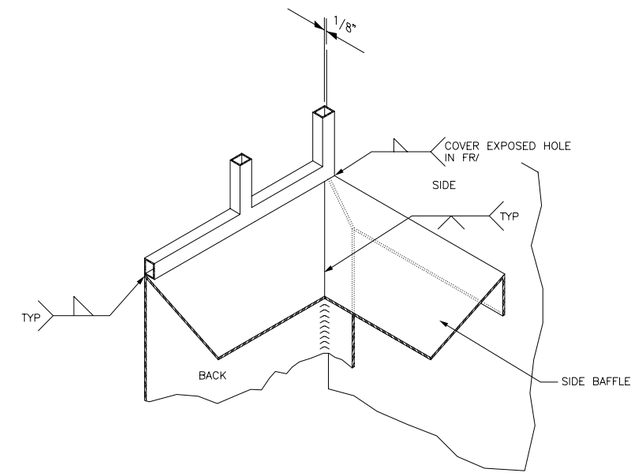

TOP BACK CORNER
SCALE: 3" = 1'-0"

SECTION 1
SCALE: 1 1/2"=1'-0"

SECTION 2
SCALE: 1 1/2" =1'-0"

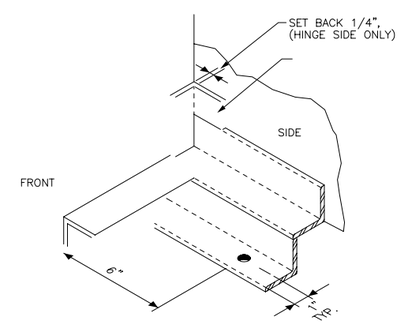

DETAIL BOTTOM FRONT CORNER A
SCALE: 3" = 1'-0"

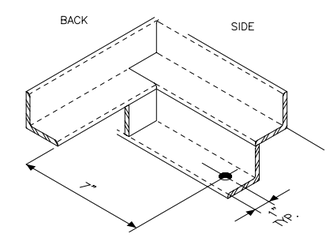

DETAIL BOTTOM BACK CORNER
SCALE:

ONE INCH
AT FULL SIZE, IF NOT ONE INCH SCALE ACCORDINGLY

No.	REVISION	BY	APP'D	DATE
.	.	.	.	.

FRED Y. CHOU
STATE OF WASHINGTON
26044
REGISTERED
PROFESSIONAL ENGINEER
EXPIRES 1/11/

MICHAEL S. KUEANZI
STATE OF WASHINGTON
24082
REGISTERED
PROFESSIONAL ENGINEER
EXPIRES 2/9/

DESIGNED:
DRAWN: CHECKED:
RECOMMENDED:
APPROVED:

METRO Municipality of Metropolitan Seattle

SCALE: AS SHOWN
CONTRACT NO:

LITTER RECEPTACLE FABRICATION

MISCELLANEOUS DETAILS

DATE: 8-6-92
FILE NO:
DRAWING NO: A-26
SHEET NO: OF

V:\Library & Standards\Standards\PFPMetro\PFP Standard Shelter Architectural Set\A-26.dwg XREFS:
Nov 02, 2005-02:41:37pm By SuterJ