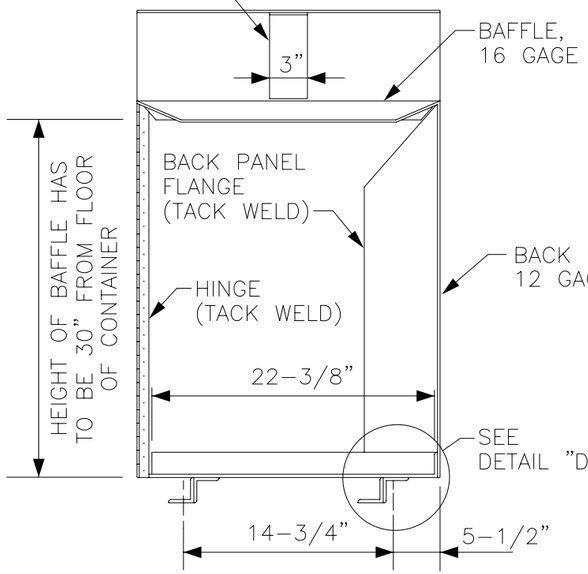

SECTION 1
SCALE: 1"=1'-0"

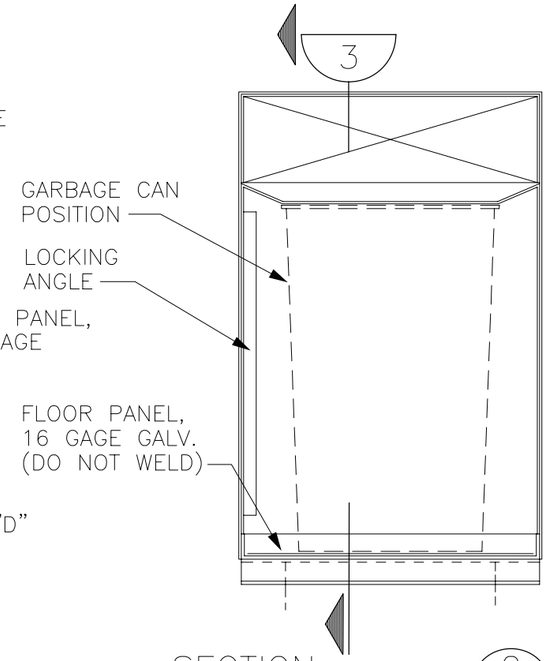

SECTION 2
SCALE: 1"=1'-0"

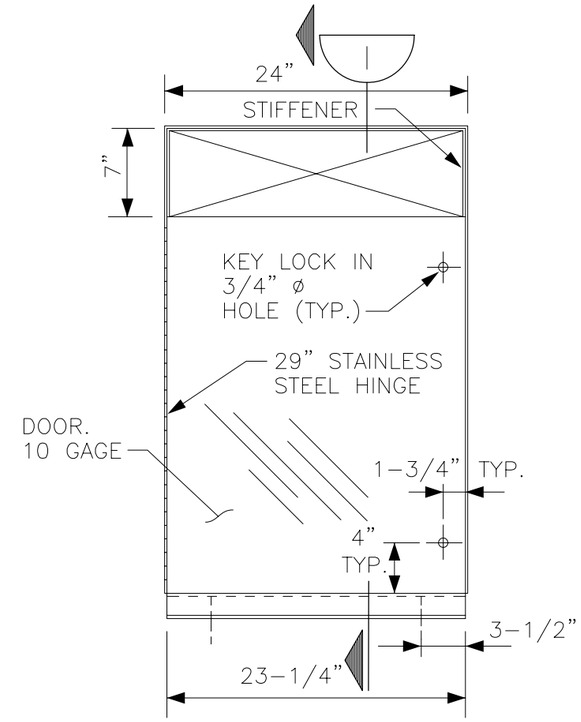

ELEVATION – FRONT
SCALE: 1"=1'-0"

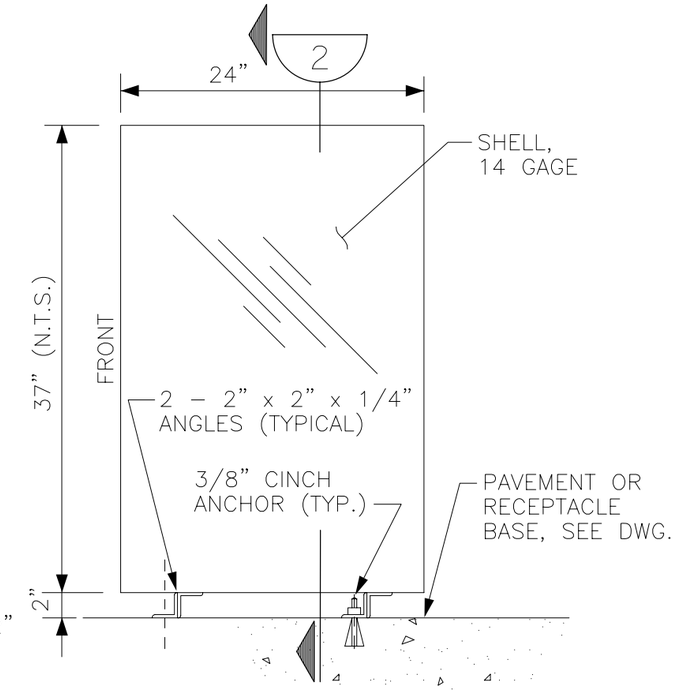

ELEVATION – SIDE
SCALE: 1"=1'-0"

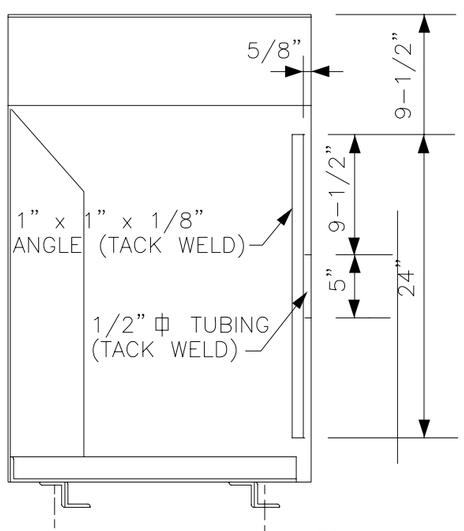

SECTION 3
SCALE: 1"=1'-0"

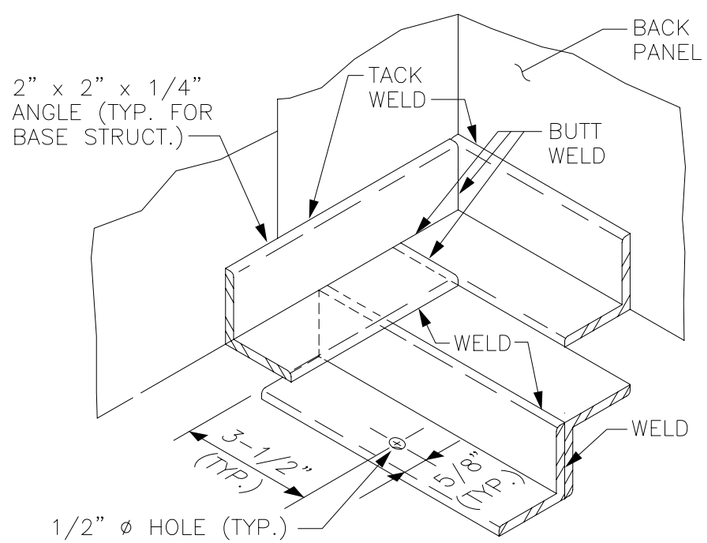

DETAIL A
SCALE: 3"=1'-0"

LIST OF MATERIALS

PART NO.	NAME	QUANT.	SIZE, MATERIAL, DESCRIPTION
1.	SHELL	1	12 GA. MILD STEEL, 96-1/2" x 24"
2.	BACK	1	12 GA. MILD STEEL, 36" x 33"
3.	DOOR	1	10 GA. MILD STEEL, 33" x 23-1/2"
4.	BAFFLES	2	16 GA. MILD STEEL, 23-7/8" x 5-1/2"
5.	BOTTOM	1	16 GA. GALV. 23" x 23"
6.	STIFFENER	1	3" x 3/16" FLAT BAR, 37-15/16" LONG
7.	BASE STRUCT.	–	2" x 2" x 1/4" ANGLE, 162" TOTAL
8.	DOOR ANGLE	1	1" x 1" x 1/8" ANGLE, 24"
9.	DOOR TUBING	1	1/2" SQ. TUBING, 5", 1/8" WALL
10.	HINGE	–	#1582A27, 2-1/2" WIDTH, .078 THICK.
–	–	–	S.S. HINGE AS PER McMASTER-CARR
11.	DOOR LOCK	2	#C132B HUDSON LOCK
12.	ANCHOR BOLT	4	CINCH ANCHOR, SEE DWG. 15A
13.	GARBAGE CAN	1	30 GAL. HOT DIP. GALV.

ONE INCH
AT FULL SIZE, IF NOT ONE INCH SCALE ACCORDINGLY

No.	REVISION	BY	APP'D	DATE

DESIGNED: H SCHMITT/F CHOU
CHECKED:
DRAWN: H SCHMITT
SCALE: AS SHOWN
RECOMMENDED:
CONTRACT NO:
APPROVED:

King County

DEPARTMENT OF TRANSPORTATION
SHELTER FABRICATION

LITTER RECEPTACLE

DATE: 4-26-90
FILE NO:
DRAWING NO: A-24
SHEET NO: OF

PLOTTED: Nov 02, 2005-02:27:02pm By SuterJ V:\Library & Standards\Standards\PFPMetro\PFP Standard Shelter Architectural Set\A-24.dwg XREFS: