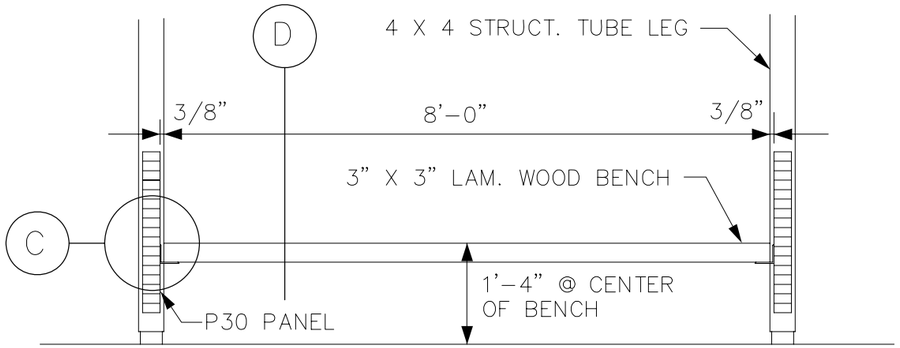

ELEVATION (S14)

SCALE: 1/2" = 1'-0"

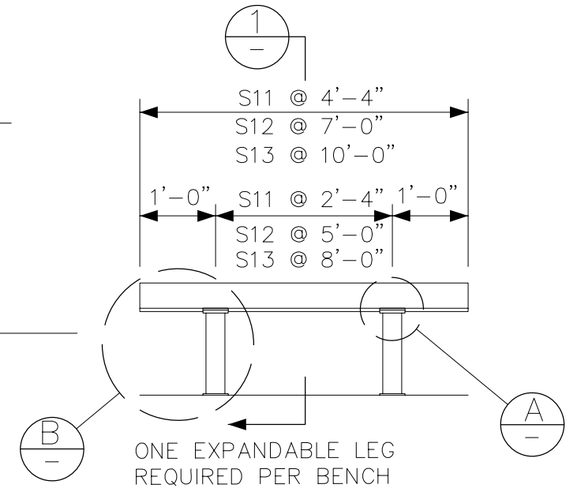

ELEVATION (S11-S12-S13)

SCALE: 1/2"=1'-0"

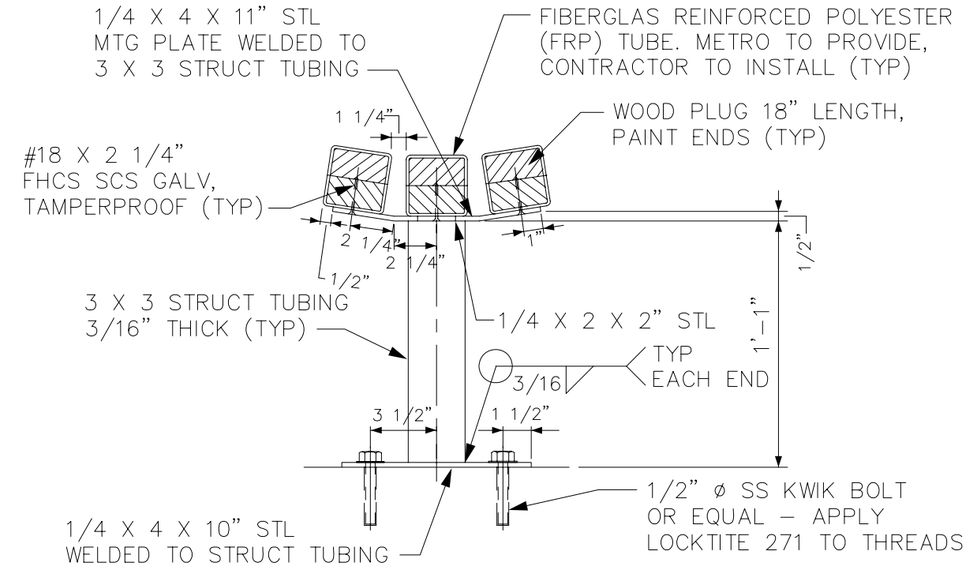

SECTION (S11-S12-S13) 1

SCALE: 1-1/2"=1'-0"

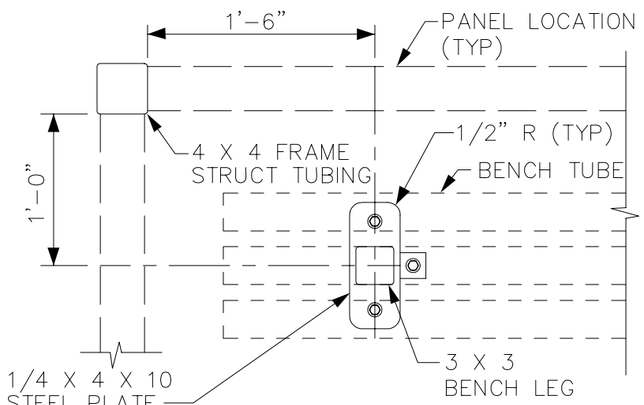

SECTION (S11-S12-S13) 2

SCALE: 1"=1'-0"

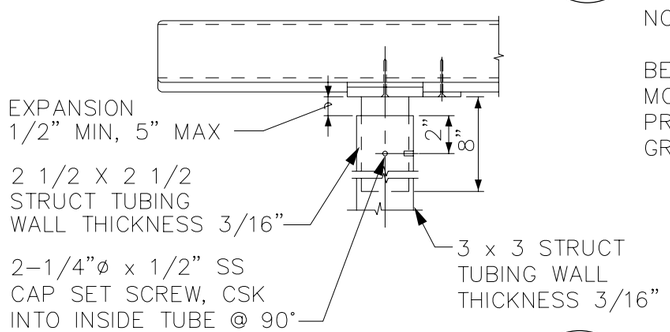

DETAIL (S11-S12-S13) A

SCALE: 1-1/2"=1'-0"

NOTE:

BENCH LEG TO BE
MOUNTED VERTICAL.
PROVIDE LEAD SHIM &
GROUT AS REQUIRED.

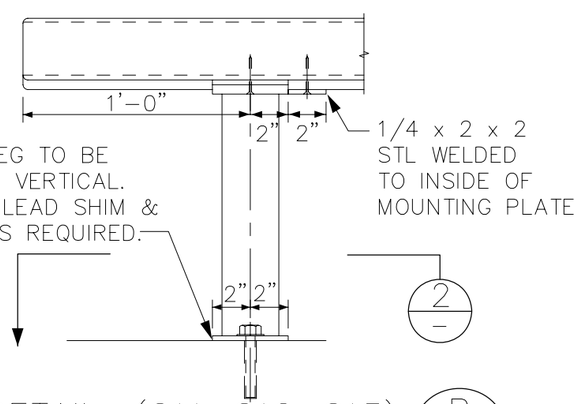

DETAIL (S11-S12-S13) B

SCALE: 1-1/2""=1'-0"

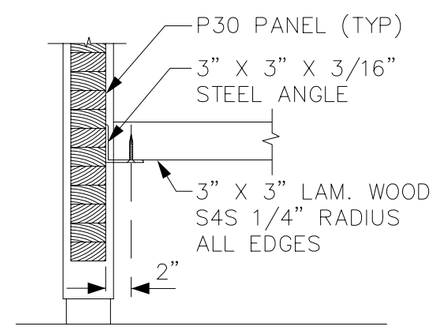

DETAIL (S14) C

SCALE: 1" = 1'-0"

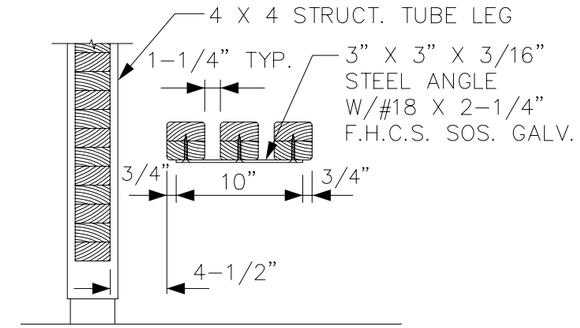

DETAIL (S14) D

SCALE: 1" = 1'-0"

NOTE: THERE SHALL BE NO S14 BENCHES AT SITES WITH B3 FOOTINGS.

ONE INCH
AT FULL SIZE, IF NOT ONE INCH SCALE ACCORDINGLY

No.	REVISION	BY	APP'D	DATE

DESIGNED: F CHOU
CHECKED:
DRAWN: H SCHMITT
SCALE: NOTED
RECOMMENDED:
CONTRACT NO:
APPROVED:

King County

DEPARTMENT OF TRANSPORTATION
SHELTER FABRICATION

BENCH - SERIES 10

DATE: APR 1990
FILE NO:
DRAWING NO: A-23
SHEET NO: OF

PLOTTED: Nov 02, 2005-02:26:07pm By SuterJ
V:\Library & Standards\Standards\PFPMetro\PFP Standard Shelter Architectural Set\A-23.dwg XREFS: