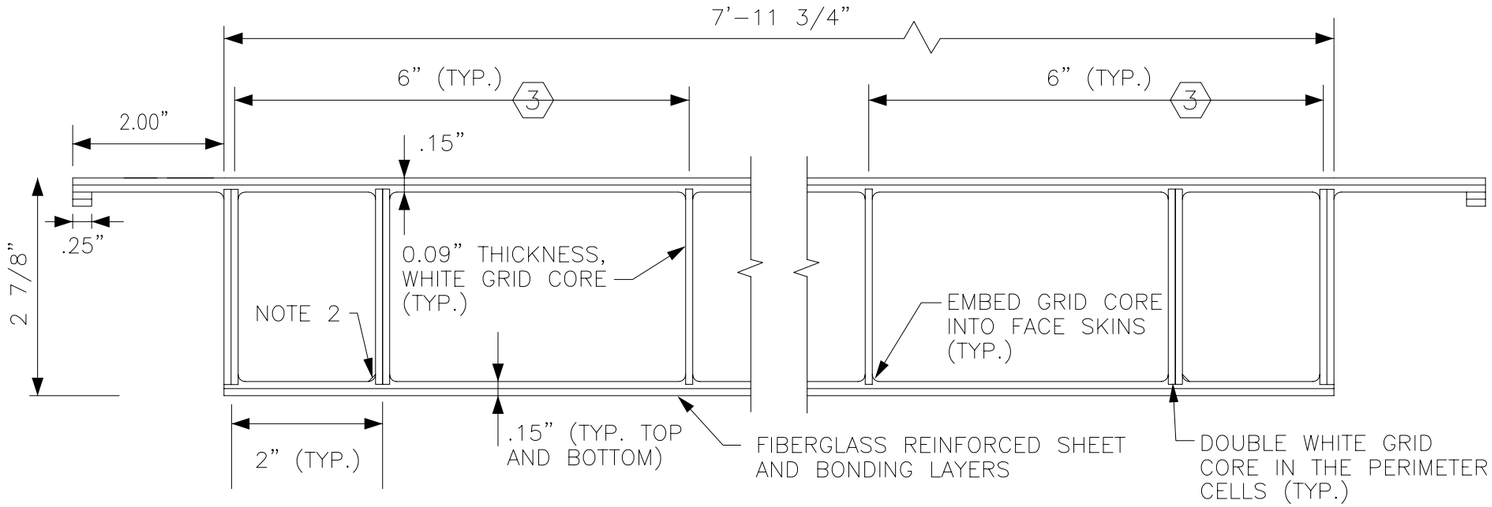

SECTION 1
SCALE: 1" = 2"

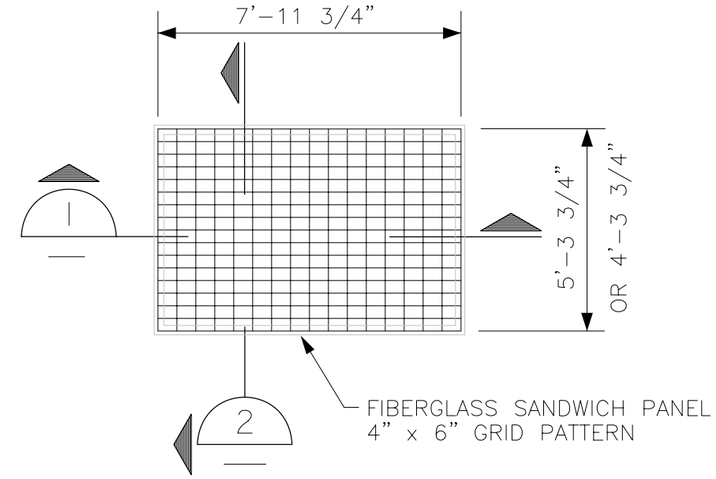

FIBERGLASS SHELTER ROOF

PLAN
SCALE: 1/4" = 1'-0"

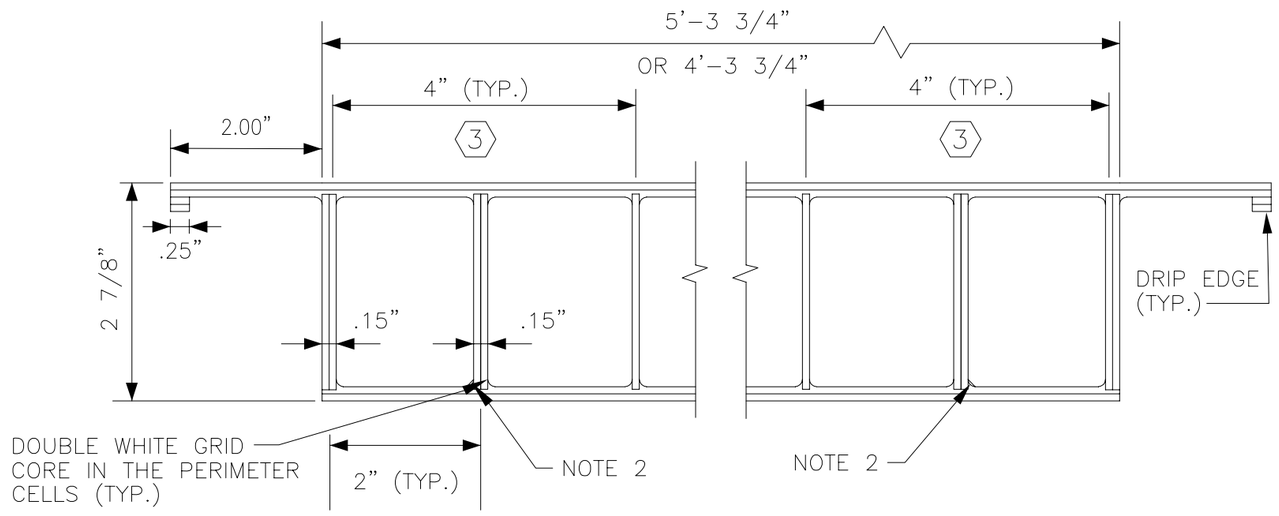

SECTION 2
SCALE: 1" = 2"

NOTES:

1. SHELTER ROOF FACE SKINS SHALL BE FABRICATED WITH TRANSLUCENT FIBERGLASS-REINFORCED ACRYLIC-POLYESTER. PROVIDE 10 MIL MINIMUM RESIN SURFACE WEATHERCOAT ON TOP SKIN.
2. APPLY VISIBLE LAYER OF CLEAR CAULKING OR RESIN AT BOTTOM FACE SKIN ALONG ALL PERIMETER CELLS AFTER RESIN AND FIBERGLASS ARE CURED.
3. INSIDE CELLS SHALL BE 6.0" x 4.0" O.C. PERIMETER CELLS SHALL BE 5-7/8" x 3-7/8" O.C. WITH THE DOUBLE WHITE WALL EMBEDDED AT 2" FROM THE EDGE OF THE ROOF

ONE INCH
AT FULL SIZE, IF NOT ONE INCH SCALE ACCORDINGLY

No.	REVISION	BY	APP'D	DATE

C. COLIN ASQUITH III — STATE OF WASHINGTON — 39310 — REGISTERED PROFESSIONAL ENGINEER
EXPIRES 5/25/

DESIGNED: CCA	CHECKED: PE
DRAWN: CCA	SCALE: NOTED
RECOMMENDED: CCA	CONTRACT NO: 02-018
APPROVED:	

King County

DEPARTMENT OF TRANSPORTATION
SHELTER FABRICATION

TRANSLUCENT FIBERGLASS SHELTER ROOF

DATE: JUL 05
FILE NO:
DRAWING NO: A-20
SHEET NO: 1 OF 1

PLOTTED: Nov 02, 2005-02:06:20pm By SuterJ
V:\Library & Standards\Standards\PFPMetro\PFP Standard Shelter Architectural Set\A-20.dwg XREFS: