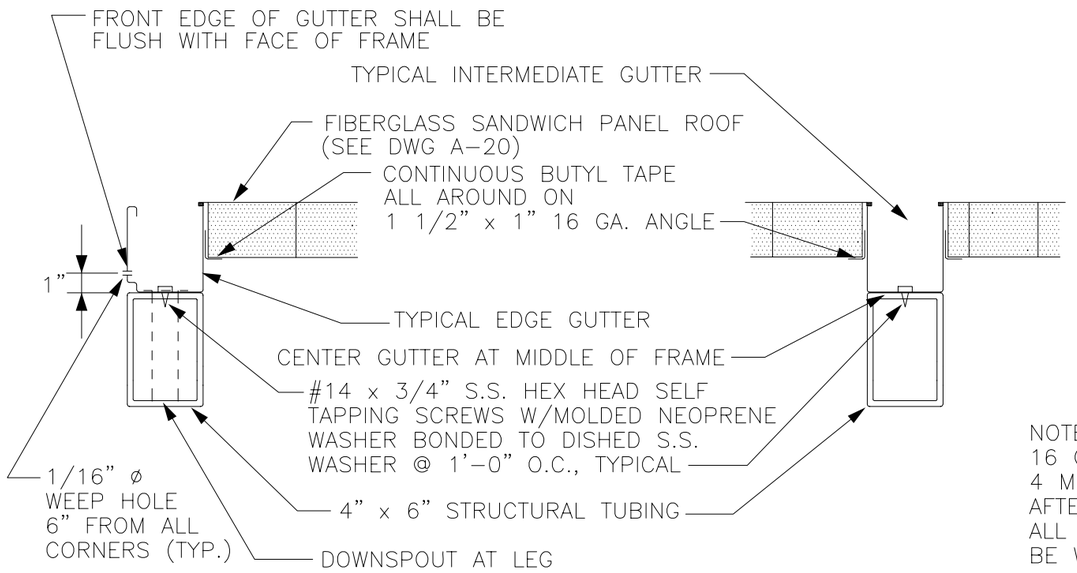

EDGE GUTTER/ROOF/FRAME

SECTION 1 / A-18

SCALE: 1 1/2" = 1'-0"

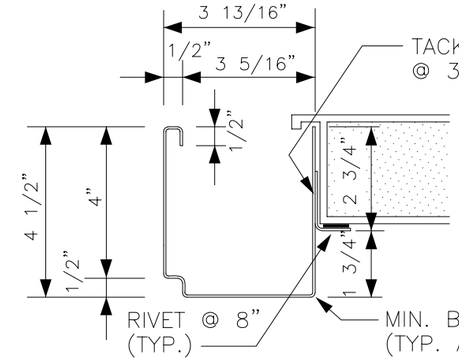

TYPICAL EDGE GUTTER

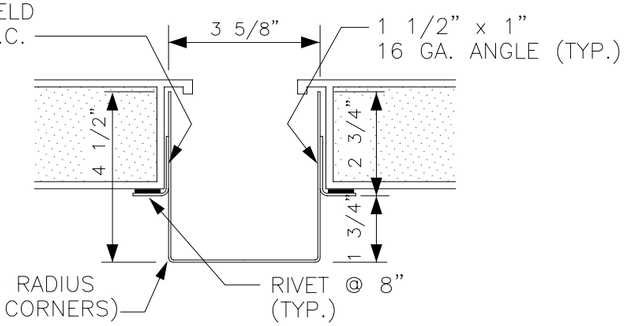

TYPICAL INTERMED. GUTTER

NOTE: ALL GUTTERS TO BE 16 GA. STL. W/ADDITIONAL 4 MIL PRIME COAT APPLIED AFTER ASSEMBLY, TYP. ALL SEAMS AND JOINTS TO BE WATERTIGHT.

DETAIL A / –

SCALE: 3" = 1'-0"

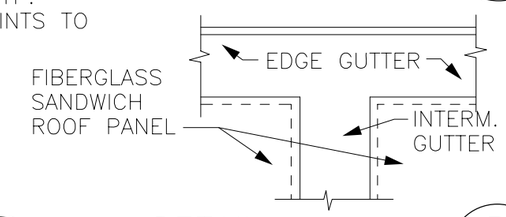

DETAIL B / –

SCALE: NTS

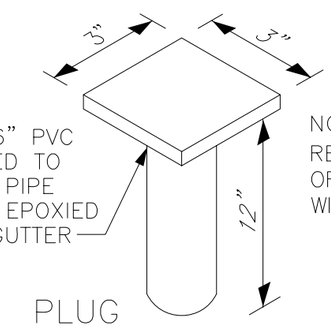

NOTE: REVERSE LOCATION OF D.S. AND PLUG WITH EACH SHELTER.

PLUG

DETAIL D / –

SCALE: NONE

INTERMED. GUTTER/ROOF/FRAME

SECTION 2 / A-18

SCALE: 1 1/2" = 1'-0"

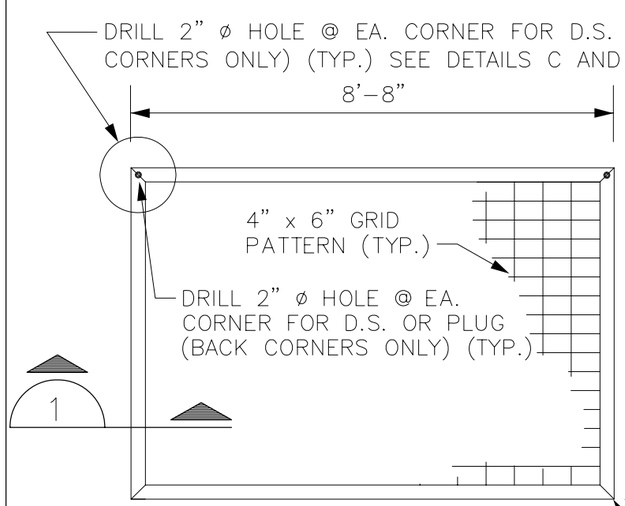

ROOF PLAN (R11)

SCALE: 3/8" = 1'-0"

FIBERGLASS SANDWICH PANEL GRID PATTERN SHALL BE ACCORDING TO SPECIFICATIONS (TYP.)

PANEL COLORS: (TYP.)
TOP: CRYSTAL
BOTTOM: CRYSTAL

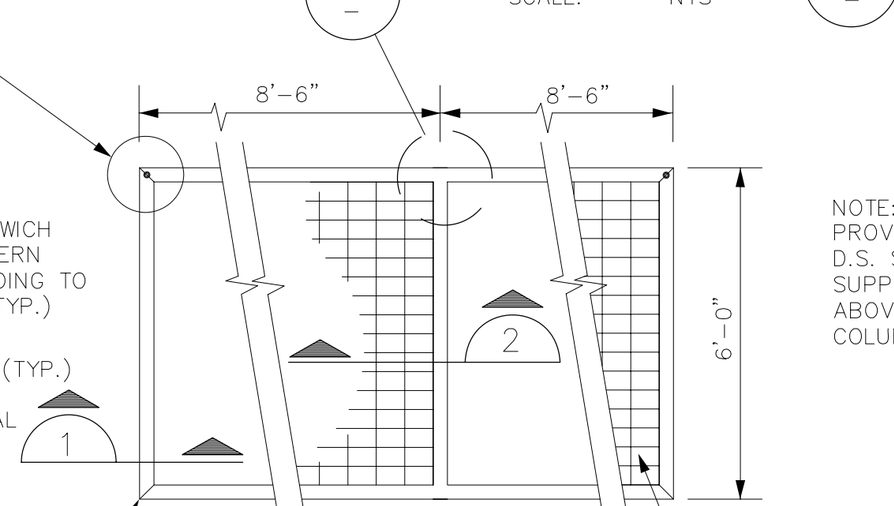

ROOF PLAN (R12)

SCALE: 3/8" = 1'-0"

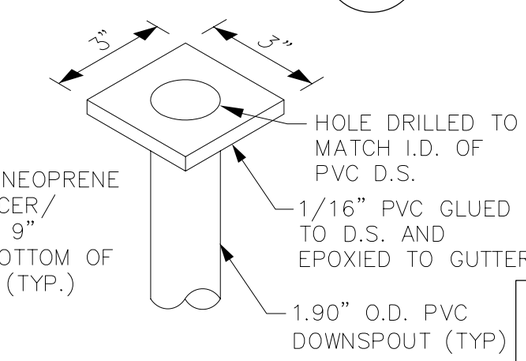

NOTE: PROVIDE NEOPRENE D.S. SPACER/ SUPPORT 9" ABOVE BOTTOM OF COLUMN. (TYP.)

DOWNSPOUT ISOMETRIC

DETAIL C / A-18

SCALE: NONE

ONE INCH
AT FULL SIZE, IF NOT ONE INCH SCALE ACCORDINGLY

No.	REVISION	BY	APP'D	DATE
△				
△				
△				
△				
△				
△				

DESIGNED: F CHOU	CHECKED: F CHOU
DRAWN: H SCHMITT	SCALE: NOTED
RECOMMENDED:	CONTRACT NO:
APPROVED:	

King County

DEPARTMENT OF TRANSPORTATION
SHELTER FABRICATION

ROOF – SERIES 10 AND ROOF DETAILS

DATE: JUN 1991
FILE NO:
DRAWING NO: A-19
SHEET NO: OF

PLOTTED: Nov 02, 2005-02:04:51pm By Suterd
V:\Library & Standards\Standards\PFPMetro\PFP Standard Shelter Architectural Set\A-19.dwg XREFS: