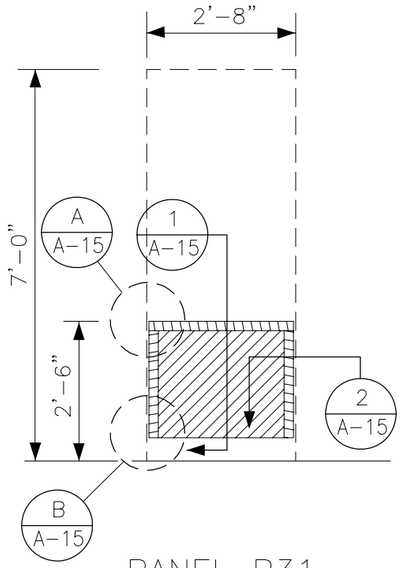

PANEL P31

SCALE: 3/8" = 1'-0"

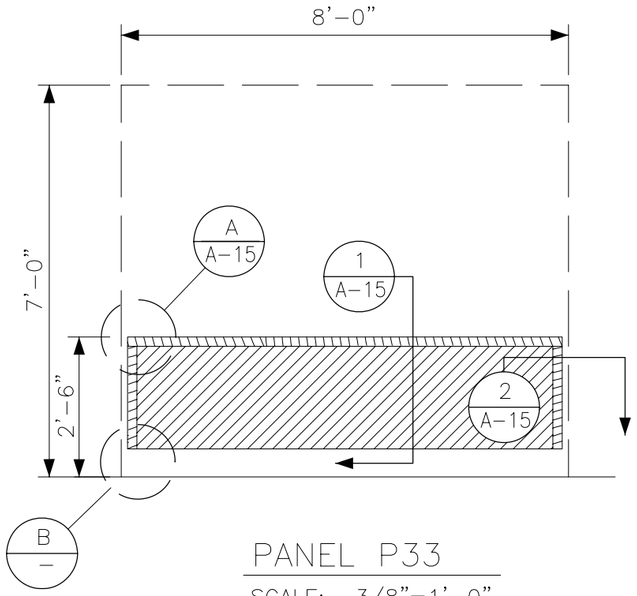

PANEL P33

SCALE: 3/8"=1'-0"

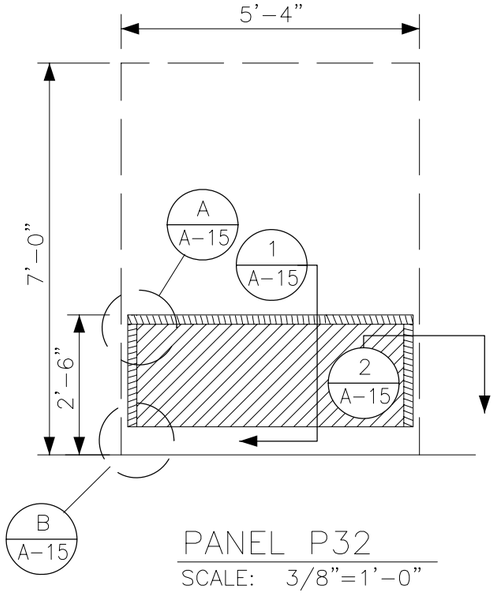

PANEL P32

SCALE: 3/8"=1'-0"

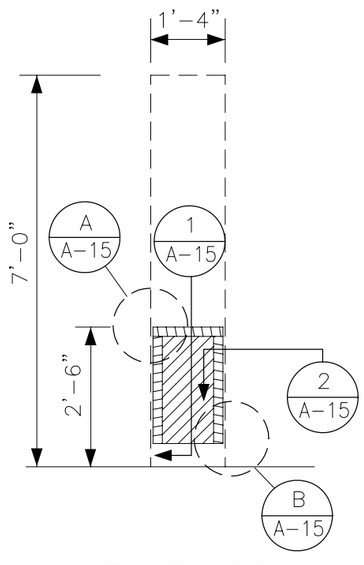

PANEL P34

SCALE: 3/8" = 1'-0"

ONE INCH

AT FULL SIZE, IF NOT ONE INCH SCALE ACCORDINGLY

No.	REVISION	BY	APP'D	DATE
△				
△				
△				
△				
△				
△				

DESIGNED: H SCHMITT/F CHOU

DRAWN: H SCHMITT

RECOMMENDED:

APPROVED:

CHECKED:

SCALE: NOTED

CONTRACT NO:

King County

DEPARTMENT OF TRANSPORTATION
SHELTER FABRICATION

PANEL – SERIES 30

DATE: MAY 1990

FILE NO:

DRAWING NO: A-16

SHEET NO: OF

PLOTTED: Nov 02, 2005-01:45:53pm By SuterJ V:\Library & Standards\Standards\PFPMetro\PFP Standard Shelter Architectural Set\A-16.dwg XREFS: