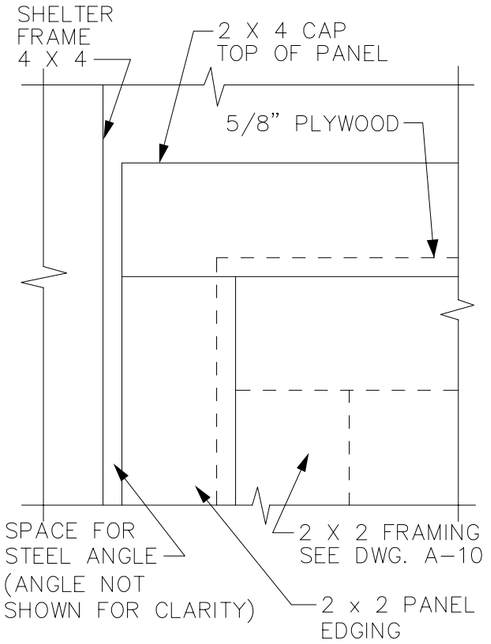

DETAIL A / A-16
SCALE: 6"=1'-0"

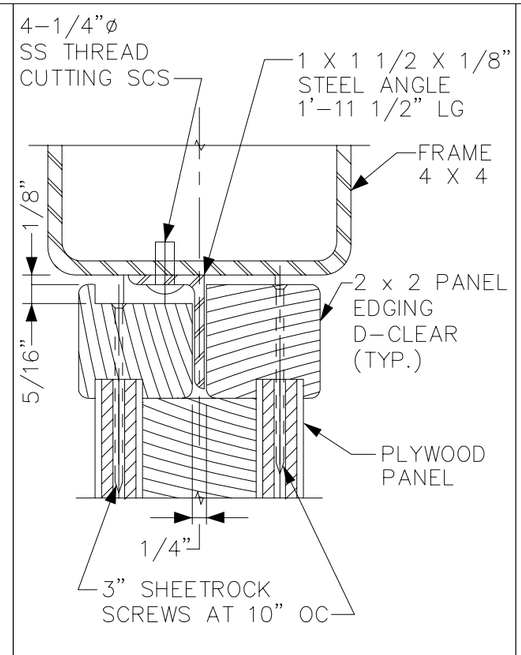

SECTION 2 / A-16
SCALE: 6"=1'-0"

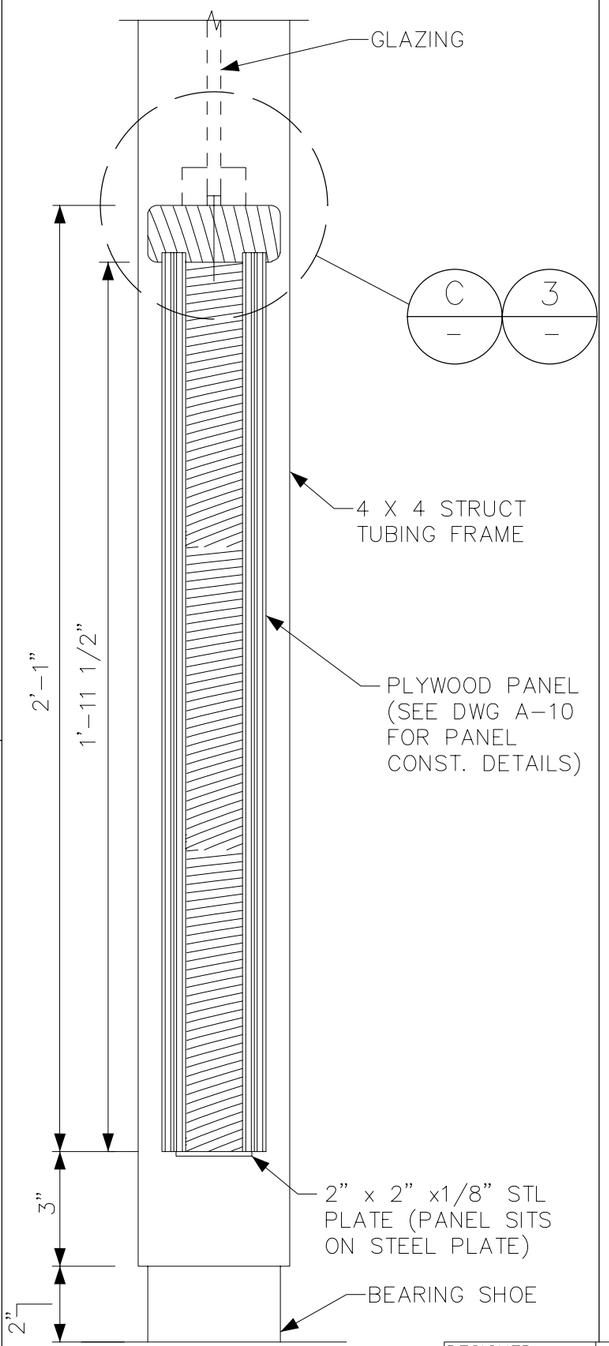

SECTION 1 / A-16
SCALE: 1"=4'-0"

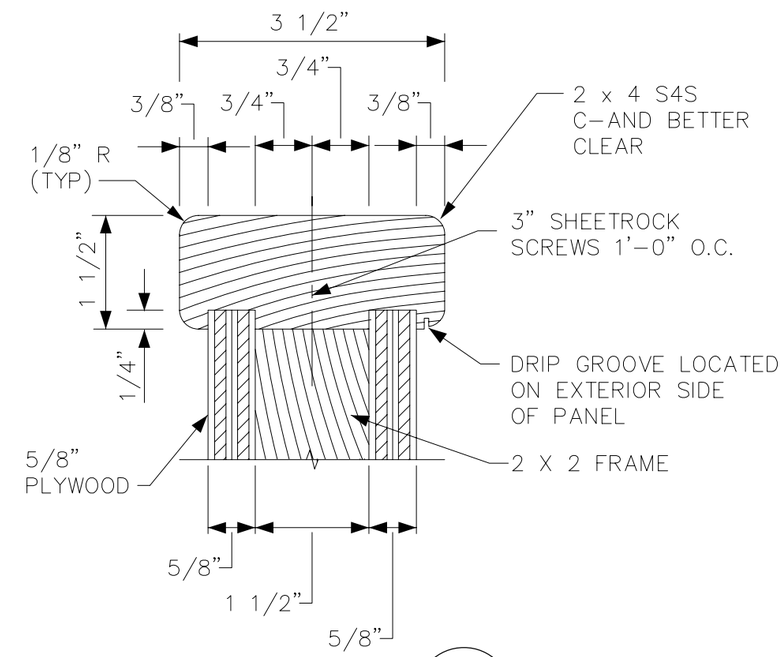

SECTION 3 / -
SCALE: 6"=1'-0"

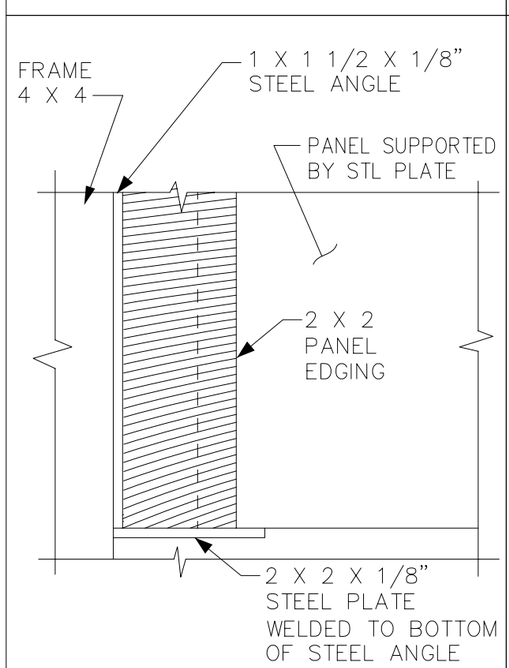

DETAIL B / A-16
SCALE: 6"=1'-0"

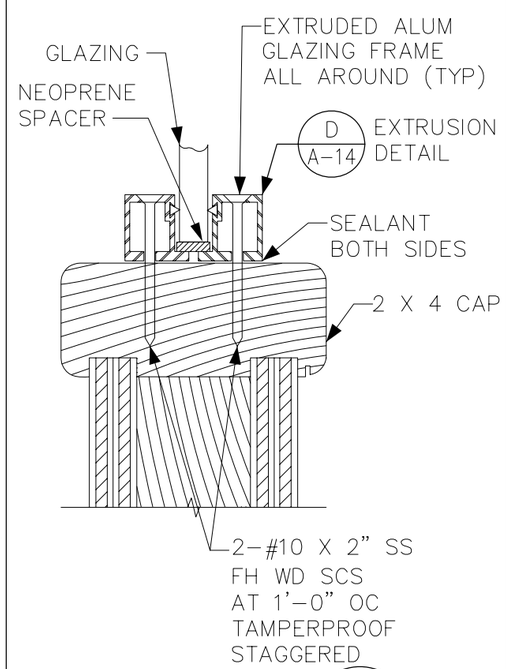

DETAIL C / A-14
SCALE: 6"=1'-0"

NOTES:

1. NAIL AND GLUE ALL JOINTS.
2. NAIL AND GLUE ALL PLYWOOD TO FRAME CONNECTIONS.
3. ALL 2 x 4 VG DOUGLAS FIR, C-AND BETTER CLEAR.
4. PLYWOOD-5/8" THICK, PATTERN 303-8 PATCH PLAIN. (MAX 6-9 PLUG EXTERIOR GRADE)
5. SEAL AND PAINT ALL EXPOSED EDGES AND SURFACES WITH ONE PRIME COAT & ONE FINISH COAT.
6. 2 x 2 FOR FRAMING LUMBER SHALL BE S4S D-CLEAR.
7. 2 x 12 FOR BENCH REINFORCEMENT SHALL BE K.D. STANDARD AND BETTER, DOUGLAS FIR.

DESIGNED: F.C.	METRO Municipality of Metropolitan Seattle		DATE: MAR 1990
DRA: H.S. / CHKD:	SCALE: NOTED	SHELTER FABRICATION	FILE:
RECOM:	CONTRACT:	PANEL – SERIES 30	DWG NO: A-15
APPR:			SHT OF

V:\Library & Standards\Standards\PFPMetro\PFP Standard Shelter Architectural Set\A-15.dwg XREFS:
Nov 02, 2005-01:32:15pm By SuterJ