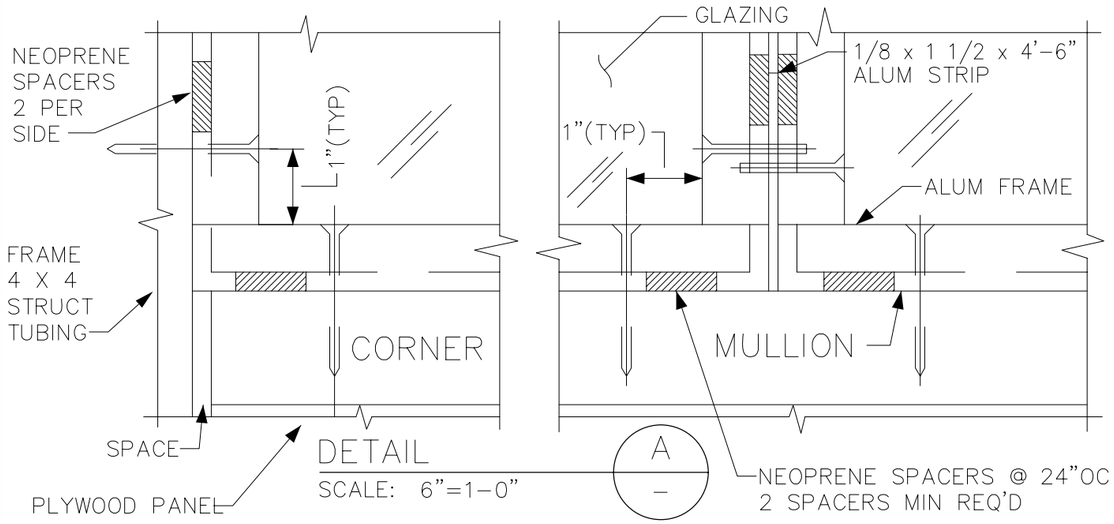

DETAIL A
SCALE: 6"=1-0"

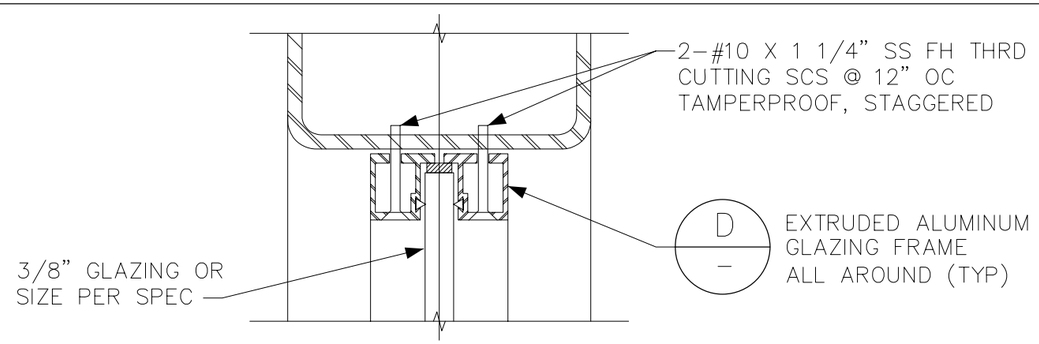

DETAIL B
SCALE: 6"=1-0"

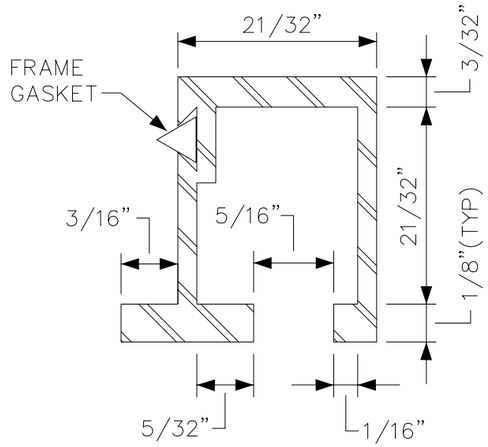

EXTRUSION DETAIL D A-15
SCALE: NONE

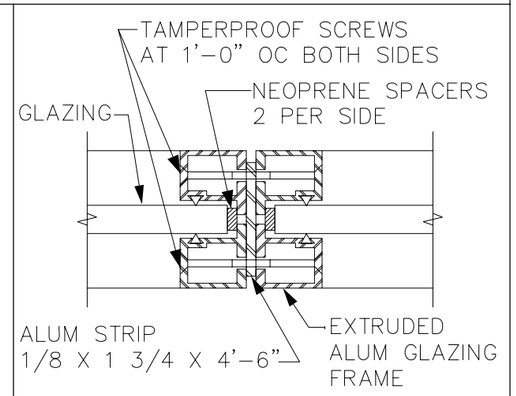

MULLION DETAIL (TYP)

SECTION 2
SCALE: 6"=1-0"

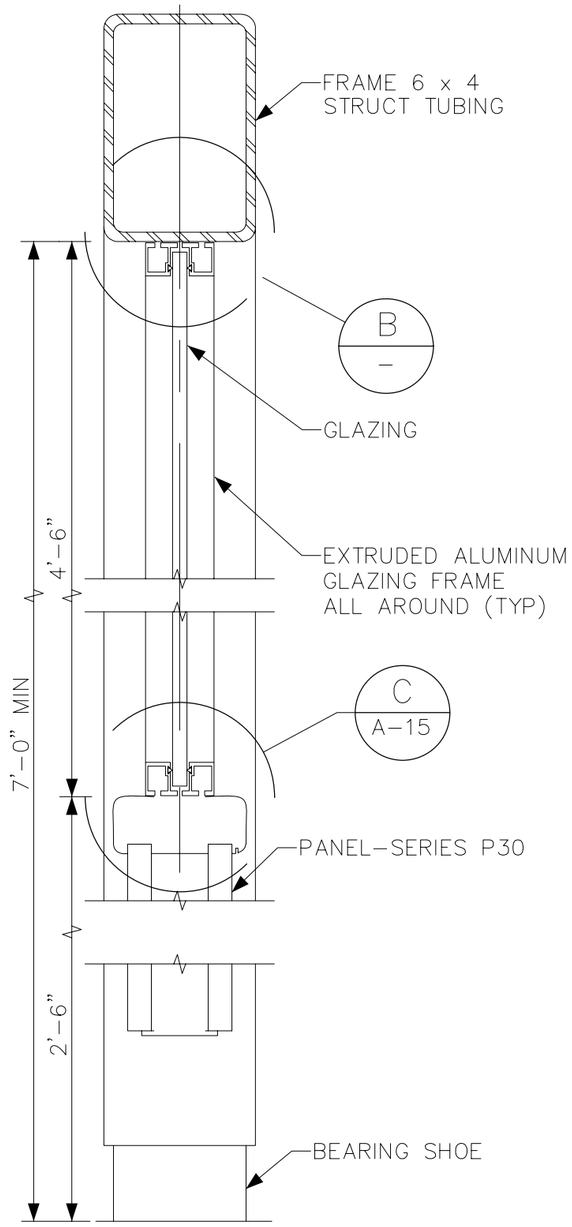

SECTION 1
SCALE: 3"=1'-0"

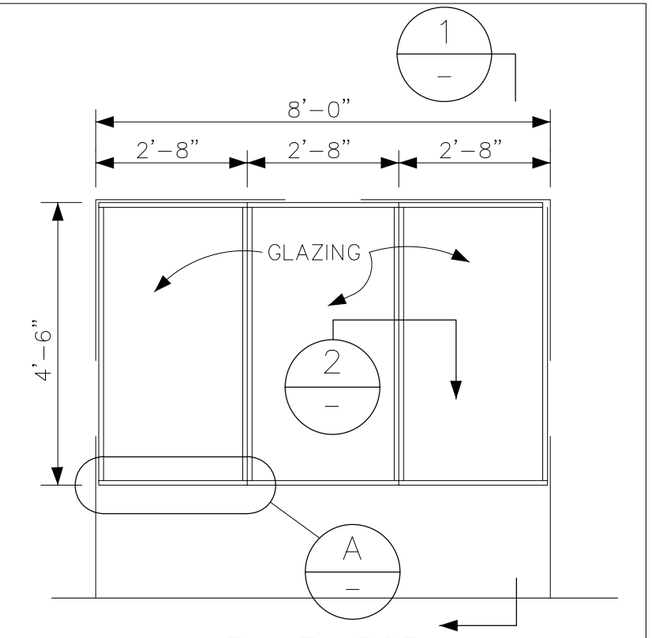

PANEL P23
3/8"=1'-0"

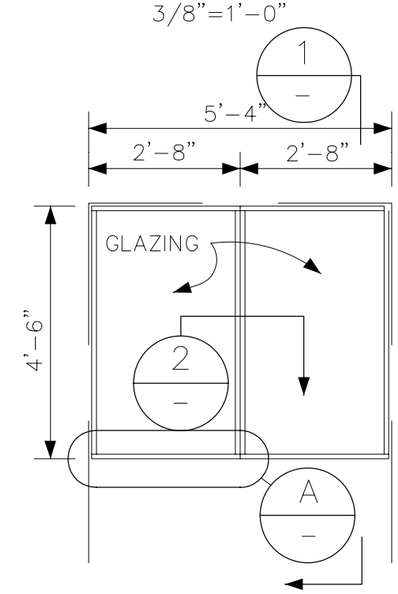

PANEL P22
3/8"=1'-0"

DESIGNED: F.C.	METRO Municipality of Metropolitan Seattle		DATE: MAR 1990
DRA: H.S. / CHKD:	SCALE: NOTED	SHELTER FABRICATION	FILE:
RECOM:	CONTRACT:	PANEL – SERIES 20	DWG NO: A-14
APPR:			SHT OF

V:\Library & Standards\Standards\PFPMetro\PFP Standard Shelter Architectural Set\A-14.dwg XREFS:
Nov 02, 2005-01:24:40pm By SuterJ