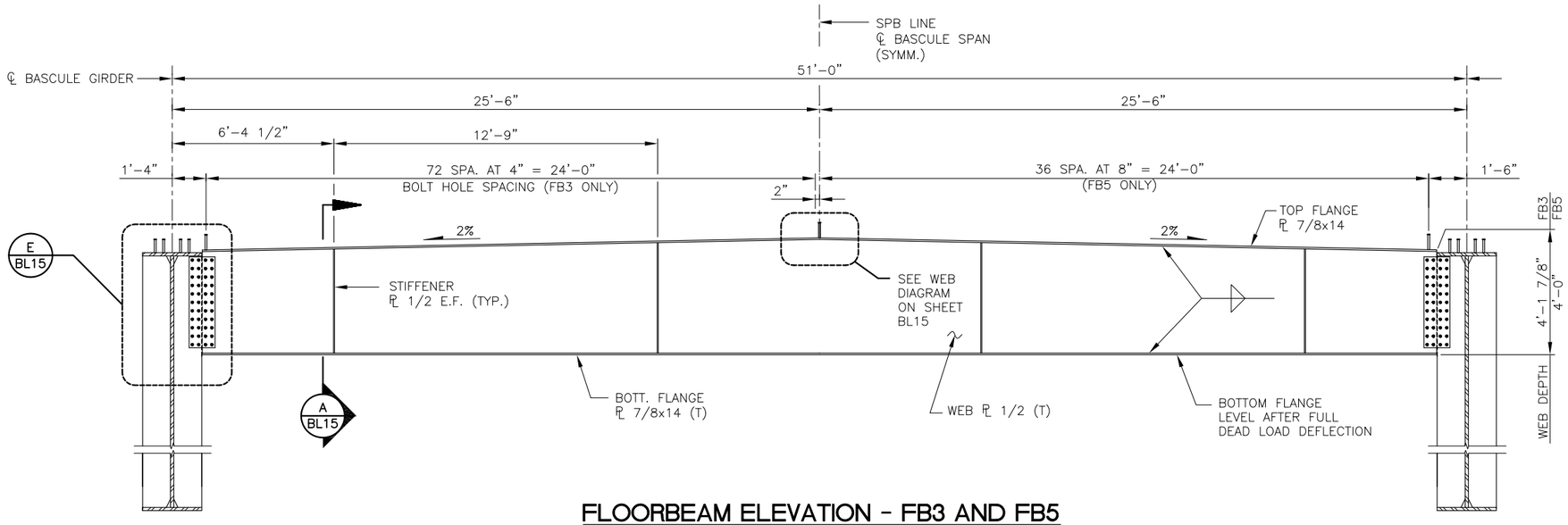

FLOORBEAM ELEVATION - FB3 AND FB5

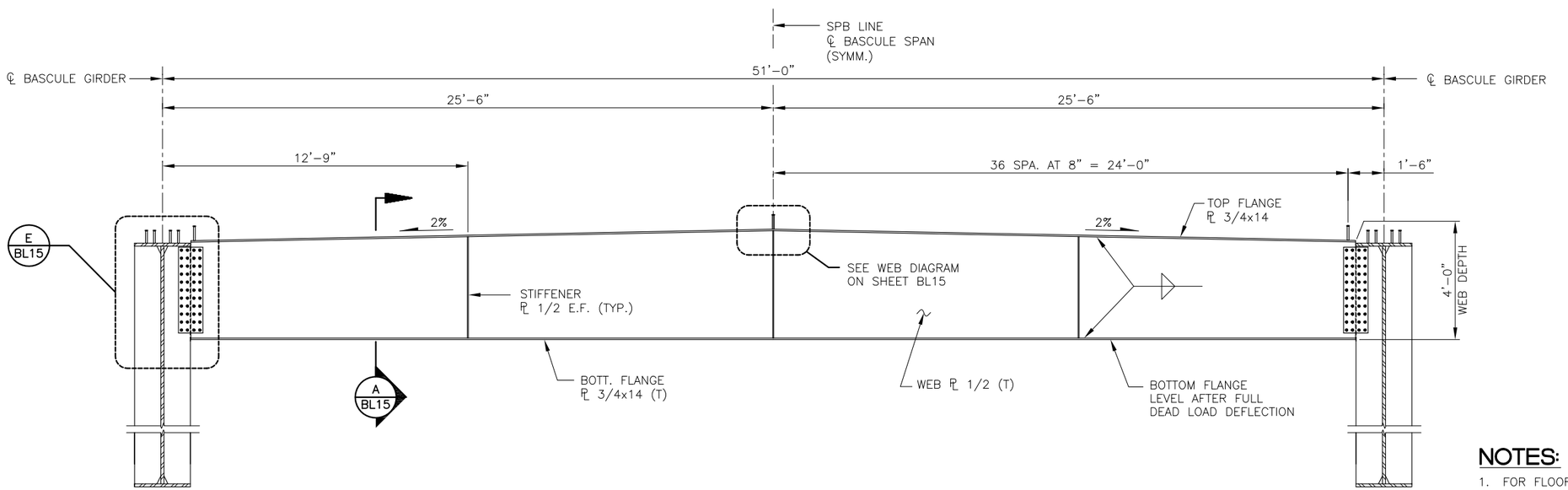

FLOORBEAM ELEVATION - FB4 AND FB6

NOTES:

1. FOR FLOORBEAM DETAILS, SHEETS BL15 AND BL16.
2. FOR MAINTENANCE WALKWAY DETAILS, SEE SHEETS BL50 THRU BL53.
3. "T" DENOTES TENSION ELEMENTS SUBJECT TO THE CHARPY V-NOTCH IMPACT TEST REQUIREMENTS OF AASHTO M270 (ASTM A709), TEMPERATURE ZONE 2, PER THE STANDARD SPECIFICATIONS.

FIELD BOOK:		
SURVEYED:		
SURVEY BASE MAP:		
DESIGN ENTERED:	P. ELLA	01/2010
DESIGNED	B. BUCKMAN	01/2010
CHECKED:	T. ZONG	01/2010
SUPERVISOR:	T. ZOLI	01/2010

NUM.	REVISION	BY	DATE

TIE ZONG — STATE OF WASHINGTON — 30371 — STRUCTURAL ENGINEER — PROFESSIONAL ENGINEER

HNTB

FED. AID No.

PROJECT No. 300197

SURVEY No. 32-24-4-22

MAINTENANCE DIVISION No. 3

KING COUNTY DEPT. OF TRANSPORTATION
HAROLD TANIGUCHI, DIRECTOR

SOUTH PARK BRIDGE #3179 REPLACEMENT

BASCULE SPAN
FLOORBEAM ELEVATIONS - 1

King County

BL12

SHEET OF SHEETS

316-63 (____)