LOCATION MAP

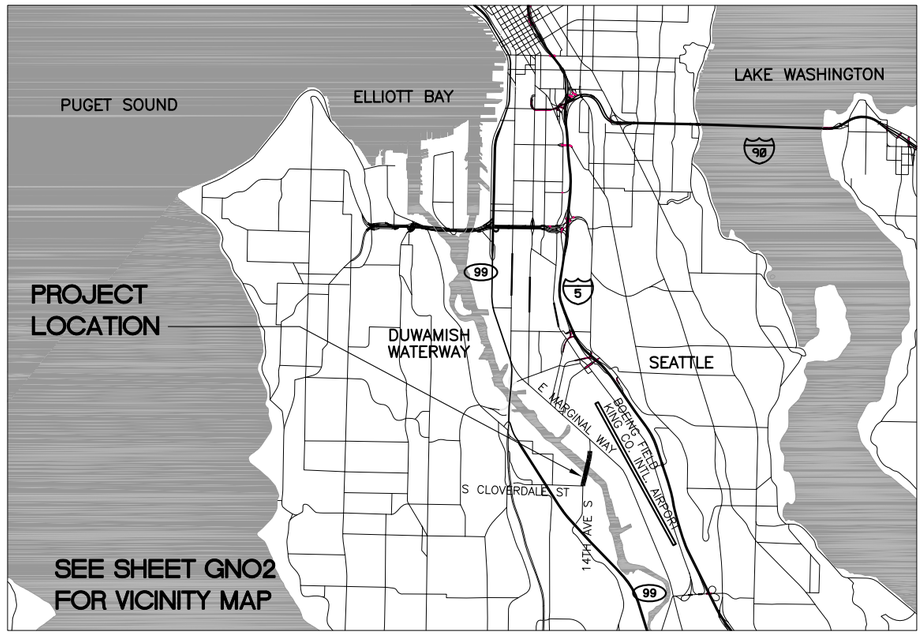

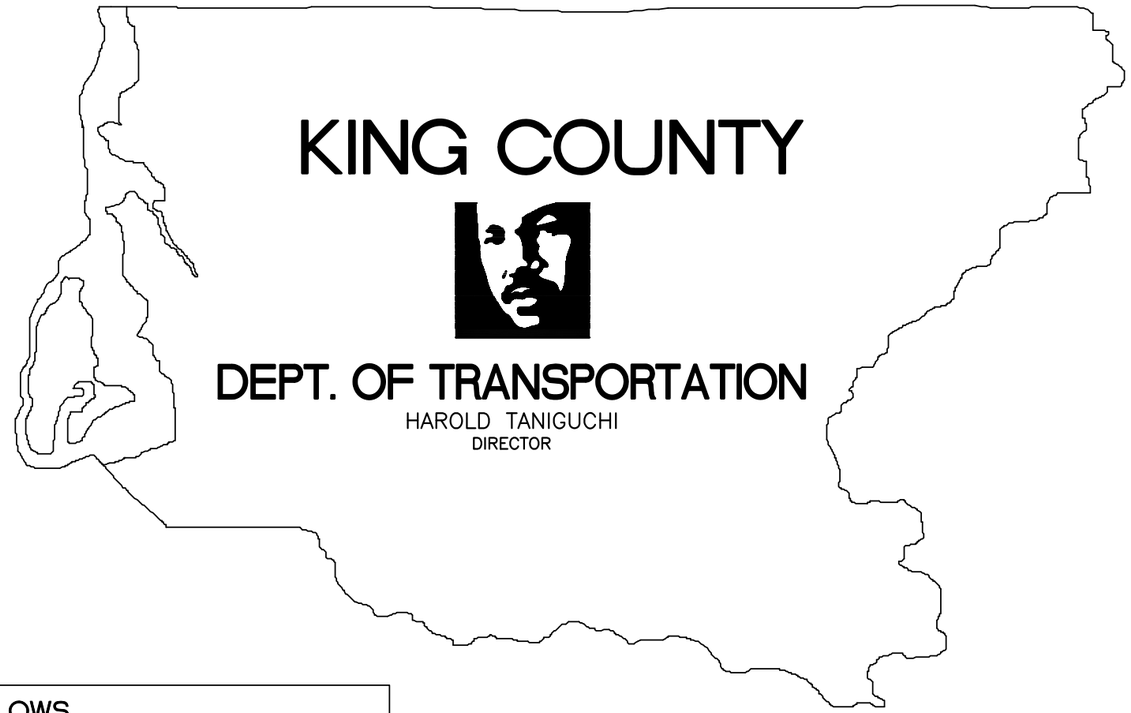

SOUTH PARK BRIDGE #3179 REPLACEMENT

CIP 300197
VOLUME 4 OF 4

THESE CONTRACT PLANS ARE GENERALLY ORGANIZED AS FOLLOWS

VOLUME 1 OF 4

SHEET DESIGNATOR	SHEET DESCRIPTION
GN	GENERAL - TITLE SHEET/INDEX/ LEGEND
SQ	SUMMARY OF QUANTITIES
RS	TYPICAL ROADWAY SECTIONS
AL	ALIGNMENT AND RIGHT OF WAY
SA	STAGING AREAS AND CONST LIMIT
SP	SITE PREPARATION PLAN
EN	EROSION CONTROL STRUCTURE NOTES
EC	EROSION CONTROL PLAN
ED	EROSION CONTROL DETAILS
RD	ROADWAY PLAN AND PROFILE
SF	FENCING PLAN
RW	RETAINING WALL PLAN
CA	CONTAMINATED AREAS
GR	GRADING PLAN
DN	DRAINAGE STRUCTURE NOTES
DR	DRAINAGE PLAN
DP	DRAINAGE PROFILE
DD	DRAINAGE DETAILS
IL	ILLUMINATION PLAN
UT	UTILITY PLAN
CH	CHANNELIZATION PLAN
LS	LANDSCAPING PLAN
LM	SHORELINE MITIGATION
TC	TRAFFIC CONTROL

VOLUME 2 OF 4

SHEET DESIGNATOR	SHEET DESCRIPTION
GN	GENERAL - TITLE SHEET/INDEX/ LEGEND
BG	BRIDGE GENERAL
SB	SOIL BORINGS
AS	APPROACH STRUCTURES
PP	PIER PROTECTION
CS	CONSTRUCTION/DEMOLITION SEQUENCE
DM	DEMOLITION

VOLUME 3 OF 4

SHEET DESIGNATOR	SHEET DESCRIPTION
GN	GENERAL - TITLE SHEET/INDEX/ LEGEND
BG	BRIDGE GENERAL
BC	BASCULE CAISSON
BP	BASCULE PIER
CT	CONTROL TOWER
TF	TRUNNION FRAME
BL	BASCULE LEAVES

VOLUME 4 OF 4

SHEET DESIGNATOR	SHEET DESCRIPTION
GN	GENERAL - TITLE SHEET/INDEX/ LEGEND
BG	BRIDGE GENERAL
PR	PEDESTRIAN RAILING
AF	ART FEATURES (ROCKERS)
TR	TRAFFIC BARRIER
PM	PIER MECHANICAL
FP	FIRE PROTECTION
BM	BASCULE MECHANICAL
BE	BASCULE ELECTRICAL
AP	ATTENUATION PILE

THESE CONTRACT PLANS HAVE NOT BEEN COMPREHENSIVELY INTEGRATED. WHAT IS REQUIRED BY ONE SHEET SHALL BE CONSIDERED REQUIRED BY ALL SHEETS.
THESE CONTRACT PLANS CONTAIN 667 SHEETS FROM SHEET 1 TO SHEET 667.

FIELD BOOK:					
SURVEYED:					
SURVEY BASE MAP:					
DESIGN ENTERED:	E. COSTA	11/2009			
DESIGNED	M. FREAS	11/2009			
CHECKED:	S. NAGJI	12/2009			
SUPERVISOR:	S. NAGJI	01/2010	NUM.	REVISION	BY / DATE

RICHARD M. JOHNSON — STATE OF WASHINGTON — 20007 — REGISTERED PROFESSIONAL ENGINEER

HNTB

FED. AID No.

PROJECT No. 300197

SURVEY No. 32-24-4-22

MAINTENANCE DIVISION No. 3

PAULETTE M. NORMAN — STATE OF WASHINGTON — 20018 — REGISTERED PROFESSIONAL ENGINEER

KING COUNTY DEPT. OF TRANSPORTATION
HAROLD TANIGUCHI, DIRECTOR
SOUTH PARK BRIDGE #3179 REPLACEMENT
TITLE SHEET

King County

GN01

SHEET 517 OF 667 SHEETS

316-63 (___)

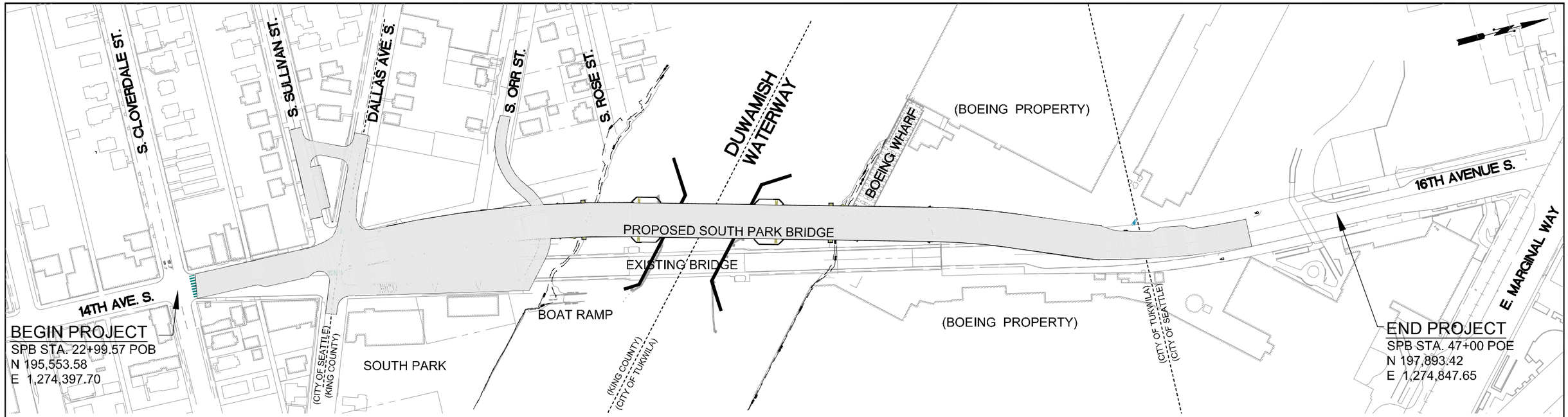

VICINITY MAP
NTS

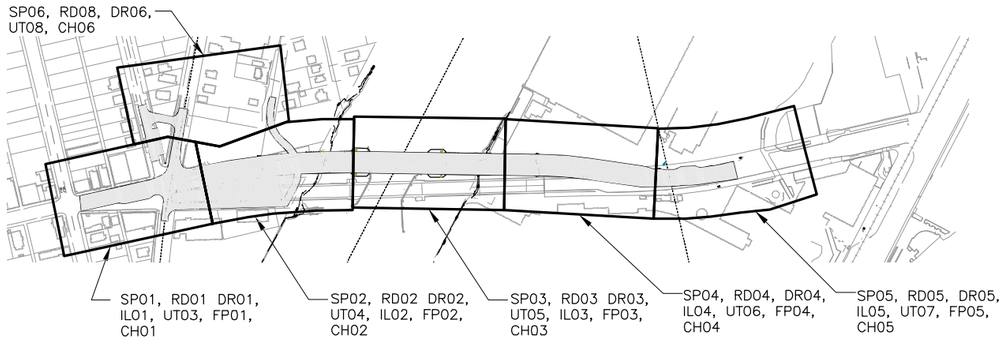

KEY MAP (FOR 20 SCALE DRAWINGS)
NTS

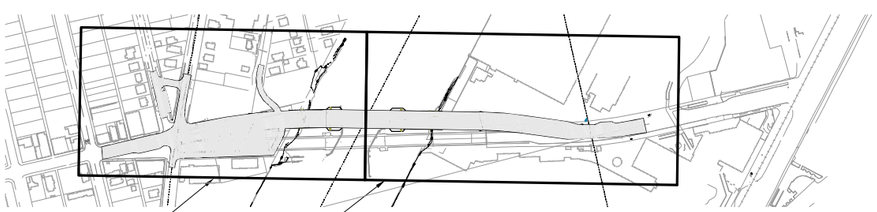

KEY MAP (FOR 80 SCALE DRAWINGS)
NTS

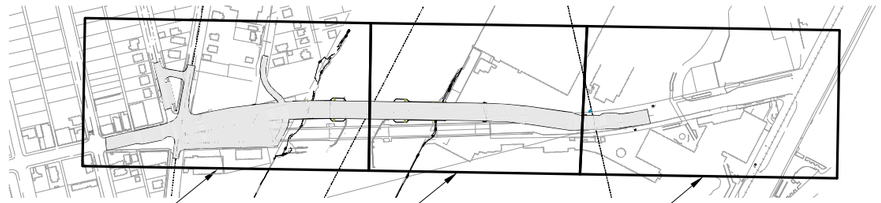

KEY MAP (FOR 40 SCALE DRAWINGS)
NTS

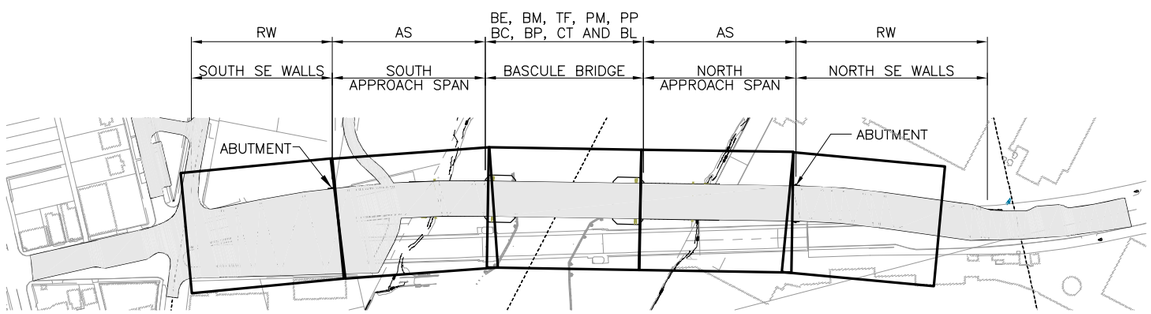

STRUCTURE ELEMENTS
NTS

FIELD BOOK:					
SURVEYED:					
SURVEY BASE MAP:					
DESIGN ENTERED:	E. COSTA	11/2009			
DESIGNED	M. FREAS	11/2009			
CHECKED:	S. NAGJI	12/2009			
SUPERVISOR:	S. NAGJI	01/2010	NUM.	REVISION	BY / DATE

SALIMA NAGJI — STATE OF WASHINGTON — 35081 — REGISTERED PROFESSIONAL ENGINEER

HNTB

FED. AID No.

PROJECT No. 300197

SURVEY No. 32-24-4-22

MAINTENANCE DIVISION No. 3

KING COUNTY DEPT. OF TRANSPORTATION
HAROLD TANIGUCHI, DIRECTOR

SOUTH PARK BRIDGE #3179 REPLACEMENT

VICINITY MAP AND KEY MAP

King County

GN02

SHEET 518 OF 667 SHEETS

316-63 (____)

LEGEND

SURFACE FEATURES

EXISTING	DESCRIPTION
	BUILDING LINE
	CONTOUR (INTERVAL)
* * *	CONTOUR (INDEX)
	CURB/PAVEMENT/SIDEWALK
X	FENCE
	PAINTED LANE LINE
	RIVERBANK/SHORELINE
	RETAINING WALL
	SHOULDER
	BUILDING

PROPOSED	DESCRIPTION
	CURB
	EDGE OF PAVEMENT
X	FENCE
	PLASTIC LANE LINE
	PEDESTRIAN RAILING
	SIDEWALK
	TRAFFIC BARRIER
CUT CUT	CUT LINE
FILL FILL	FILL LINE
	CONTOUR (0.5')
* * *	CONTOUR (2.0')

UTILITIES

EXISTING	DESCRIPTION
A	AIR
E	ELECTRICAL
F	FIBER OPTIC
FM	FIRE MAIN
FP	FIRE PROTECTION
G	GAS
IW	INDUSTRIAL WASTE
OP	POWER (AERIAL)
	SANITARY SEWER
SM	STEAM
	STORM DRAINAGE
ot	TELEPHONE (AERIAL)
T	TELECOMM
W	WATER
CW	COMBINED WATER

PROPOSED	DESCRIPTION
G	GAS
FO	FIBER OPTIC
FP	FIRE PROTECTION
OP	POWER (AERIAL)
UP	POWER (BURIED)
SS	SANITARY SEWER
	STORM DRAIN PIPE
T	TELECOM
SD	UNDERDRAIN PIPE
W	WATER
VC	VACANT CONDUIT

SURVEY

EXISTING	DESCRIPTION
	PERMANENT EASEMENT
R/W	RIGHT-OF-WAY
	RIGHT-OF-WAY CENTERLINE

PROPOSED	DESCRIPTION
	AERIAL EASEMENT
	AGREEMENT TO RECONSTRUCT DRIVEWAY
	AQUATIC EASEMENT
	CITY/COUNTY LIMITS
	CONSTRUCTION CENTERLINE
	PROPERTY LINE
R/W	PROPOSED RIGHT-OF-WAY
	SECTION LINE
	TEMPORARY CONSTRUCTION EASEMENT
	UTILITY EASEMENT

GAS/POWER/TELEPHONE

EXISTING	PROPOSED	DESCRIPTION
G		GAS METER
G		GAS VALVE
P		POWER VAULT
		STREET LIGHT
		UTILITY POLE
		POWER POLE
UVT		UNDERGROUND TELECOM VAULT
		UTILITY POLE ANCHOR

SANITARY SEWER/WATER

EXISTING	PROPOSED	DESCRIPTION
		FIRE HYDRANT
SS	SS	SANITARY SEWER MANHOLE
	S	STORM DRAIN CLEANOUT
		THRUST BLOCK
		WATER BLOW-OFF ASSEMBLY
	W	WATER METER
		WATER VALVE
		UTILITY CAP

DRAINAGE

EXISTING	PROPOSED	DESCRIPTION
		CATCH BASIN TYPE
		CATCH BASIN TYPE 2/ MANHOLE/CONTROL STRUCTURE
	B	CATCH BASIN TYPE 240B
	C	CATCH BASIN TYPE 240C
	D	CATCH BASIN TYPE 240D
		CATCH BASIN TYPE 242B
		DIRECTION OF FLOW
		DIRECTION OF SLOPE
		NON-STANDARD CATCH BASIN
		QUARRY SPALLS OR ROCK OUTFALLS
		VAULT
		YARD DRAIN

X — LETTER IDENTIFIES SECTION, VIEW OR DETAILS

XX — IDENTIFIES SHEET NO. ON WHICH SECTION, VIEW OR DETAIL IS SHOWN OR TAKEN FROM, "-" INDICATES SHOWN ON THE SAME SHEET

ROADWAY

EXISTING	PROPOSED	DESCRIPTION
	LANE	BIKE LANE MARKING
		CROSSWALK MARKING
		CURB RAMP
		IMPACT ATTENUATOR
		PERMANENT SIGNING
		AP\BVC\EVC\PC\PT
		FIXED BOLLARD
		BRICK SIDEWALK
		LANDSCAPING AREA
		PLANTABLE PAVING

STRUCTURE

EXISTING	PROPOSED	DESCRIPTION
	B-1	BORING LOCATION
	C-1	CONE LOCATION
		EPOXY COATED BAR
	201	REINFORCEMENT BAR MARK
		EXISTING BRIDGE PIER

SURVEY

EXISTING	PROPOSED	DESCRIPTION
		BENCH MARK
		MONUMENT (IN CASE)
	R/W # X-XXXX-XXX-X	RIGHT OF WAY NUMBER
	S32 S29 S33 S28	SECTION CORNER
	XXXXXXXXX	TAX PARCEL NUMBER
		MONITORING WELL

NOTE:

1. SEE "IL", "EC", "GR", "LS", "TC" SHEETS FOR ADDITIONAL LEGEND ITEMS.

ABBREVIATIONS

AL	ALUMINUM
ABT	ABOUT
AC	ASPHALT CONCRETE
AP	ANGLE POINT
APPRO	APPROACH SPAN
APPROX.	APPROXIMATE
AVE.	AVENUE
ARD	AGREEMENT TO RECONSTRUCT DRIVEWAY
BFA	BOEING FACILITY ACCESS
BK	BACK
BLDG	BUILDING
BOT	BOTTOM
BRG	BEARING
BTWN	BETWEEN
BVC	BEGINNING OF VERTICAL CURVE
℄	CENTERLINE
CB	CATCH BASIN
CL	CLASS
CLR	CLEAR
CIP	CAST IN PLACE
CG	CENTER OF GRAVITY
CONC.	CONCRETE
CONST	CONSTRUCTION
COS	CITY OF SEATTLE
CR	CURB RETURN
CSL	CROSS HOLE SONIC LOGGING
C.Y.	CUBIC YARD
DEMO	DEMOLITION
DIAM.	DIAMETER
DIM	DIMENSION
D.I.	DUCTILE IRON
DWY	DRIVEWAY
DWG	DRAWING
E	EAST, EASTING
EA	EACH
EF	EACH FACE
ELEV.	ELEVATION
EOP	EDGE OF PAVEMENT
EST.	ESTIMATE
EQ	EQUAL
EVC	END OF VERTICAL CURVE
EX	EXISTING
EXP	EXPANSION
EXT	EXTERNAL
FIG.	FIGURE
FIX	FIXED
FL.	FLOW LINE
FT	FOOT/FEET
FF	FAR FACE
GALV.	GALVANIZED
GR	GRADE
GRD	GROUND
GOVT.	GOVERNMENT
HORIZ	HORIZONTAL
HT	HEIGHT
HUND	HUNDRED
IE	INVERT ELEVATION
IN.	INCHES
INCL.	INCLUDING
INT	INTERNAL
INTERM	INTERMEDIATE
INV.	INVERT
JT	JOINT
KC	KING COUNTY
L.F.	LINEAL FEET
LT	LEFT
L	LENGTH
L.S.	LUMP SUM
LB.	POUNDS
MH	MANHOLE
MAX.	MAXIMUM
MHHW	MEAN HIGHER HIGH WATER
MHW	MEAN HIGH WATER
MIC	MONUMENT IN CASE
MIN.	MINIMUM
MISC	MISCELLANEOUS
MGAL	THOUSAND GALLONS
MJ	MECHANICAL JOINT
N	NORTH, NORTHING
NF	NEAR FACE
NO.	NUMBER
NST	NOT STEEPER THAN
NTS	NOT TO SCALE
O.C.	ON CENTER
PVT	PAVEMENT
PC	POINT OF CURVATURE
PCMS	PORTABLE CHANGEABLE MESSAGE SIGN
PI	POINT OF INTERSECTION
PL.	PLACE
PS	PRESTRESSED
PSI	POUNDS PER SQUARE INCH
POB	POINT OF BEGINNING
POC	POINT ON CURVE
POE	POINT OF ENDING
PRC	POINT OF REVERSE CURVE
PT	POINT OF TANGENCY
PVC	POLYVINYL CHLORIDE
PVI	POINT OF VERTICAL INTERSECTION
QTY	QUANTITY
R	RADIUS
R.	RANGE
RDWY	ROADWAY
REINF.	REINFORCEMENT
REQD	REQUIRED
RGS	RIGID GALVANIZED STEEL
R/W	RIGHT-OF-WAY
RT	RIGHT
S.	SOUTH
SCH	SCHEDULE
SCHED	SCHEDULE
SD	STORM DRAIN
SDR	STANDARD DIMENSION RATIO
SE	SUPER ELEVATION
SECT	SECTION
SE WALL/SEW	STRUCTURAL EARTH WALL
S.F.	SQUARE FEET
SHLD	SHOULDER
SHT	SHEET
SPA	SPACING
SPB	SOUTH PARK BRIDGE
SST	STAINLESS STEEL
ST.	STREET
STA.	STATION
STD.	STANDARD
S.Y.	SQUARE YARDS
SW	SIDEWALK
SYM	SYMMETRICAL
T/T.	TANGENT, TOWNSHIP
TCE	TEMPORARY CONSTRUCTION EASEMENT
TEMP	TEMPORARY
THWN	THERMOPLASTIC HIGH WATER-RESISTANT NYLON-COATED
T.B.D.	TO BE DETERMINED
TYP.	TYPICAL
UNO	UNLESS NOTED OTHERWISE
VAR	VARIES
VC	VERTICAL CURVE
VERT	VERTICAL
W	WEST
W.M.	WILLAMETTE MERIDIAN
W/	WITH
W/O	WITHOUT
WSDOT	WASHINGTON DEPARTMENT OF TRANSPORTATION
XHHW	CROSS-LINKED POLYETHYLENE HIGH HEAT-RESISTANT WATER-RESISTANT
&	AND
@	AT

FIELD BOOK:			
SURVEYED:			
SURVEY BASE MAP:			
DESIGN ENTERED:	E. COSTA	11/2009	
DESIGNED	M. FREAS	11/2009	
CHECKED:	S. NAGJI	12/2009	
SUPERVISOR:	S. NAGJI	01/2010	

NUM.	REVISION	BY	DATE

SALIMA NAGJI — STATE OF WASHINGTON — 36481 — REGISTERED PROFESSIONAL ENGINEER

HNTB

FED. AID No.

PROJECT No. 300197

SURVEY No. 32-24-4-22

MAINTENANCE DIVISION No. 3

KING COUNTY DEPT. OF TRANSPORTATION

HAROLD TANIGUCHI, DIRECTOR

SOUTH PARK BRIDGE #3179 REPLACEMENT

LEGEND AND ABREVIATIONS

King County

GN03

SHEET 519 OF 667 SHEETS

316-63 (___)

INDEX OF SHEETS - VOLUME 1

SHT. No.	SHEET	TITLE	SHT. No.	SHEET	TITLE	SHT. No.	SHEET	TITLE
1	GN01	TITLE SHEET	71	SF02	FENCING PLAN – 2	141	UT05	UTILITY PLANS – 3
2	GN02	VICINITY MAP / KEY MAP	72	SF03	FENCING DETAILS	142	UT06	UTILITY PLANS – 4
3	GN03	LEGEND AND ABBREVIATIONS	73	RW01	RETAINING WALL LAYOUT – SOUTH APPROACH	143	UT07	UTILITY PLANS – 5
4	GN04	INDEX OF SHEETS – VOLUME 1	74	RW02	RETAINING WALL ELEVATIONS – SOUTH APPROACH	144	UT08	UTILITY PLANS – 6
5	GN05	INDEX OF SHEETS – VOLUME 2	75	RW03	RETAINING WALL LAYOUT – NORTH APPROACH	145	UT09	UTILITY PROFILE – SANITARY SEWER SOUTH
6	GN06	INDEX OF SHEETS – VOLUME 3	76	RW04	RETAINING WALL ELEVATIONS – NORTH APPROACH	146	UT10	UTILITY PROFILE – SANITARY SEWER NORTH
7	GN07	INDEX OF SHEETS – VOLUME 4	77	RW05	RETAINING WALL SECTIONS	147	UT11	UTILITY PROFILE – WATERLINE SOUTH
8	GN08	INDEX OF SHEETS ALPHANUMERIC – 1	78	RW06	STRUCTURAL EARTH WALL	148	UT12	UTILITY PROFILE – WATERLINE NORTH
9	GN09	INDEX OF SHEETS ALPHANUMERIC – 2	79	RW07	STRUCTURAL EARTH WALL – FACING PANEL DETAILS	149	UT13	UTILITY DETAILS – 1
10	GN10	INDEX OF SHEETS ALPHANUMERIC – 3	80	RW08	STRUCTURAL EARTH WALL – UTILITIES	150	UT14	UTILITY DETAILS – 2
11	GN11	INDEX OF SHEETS ALPHANUMERIC – 4	81	RW09	STRUCTURAL EARTH WALL – UTILITY DETAILS	151	UT15	UTILITY DETAILS – 3
12	SQ01	SUMMARY OF QUANTITIES – 1	82	CA01	POTENTIAL CONTAMINATION AREA – 1	152	CH01	CHANNELIZATION PLAN – 1
13	SQ02	SUMMARY OF QUANTITIES – 2	83	CA02	POTENTIAL CONTAMINATION AREA – 2	153	CH02	CHANNELIZATION PLAN – 2
14	SQ03	SUMMARY OF QUANTITIES – 3	84	GR01	GRADING PLAN – 1	154	CH03	CHANNELIZATION PLAN – 3
15	SQ04	SUMMARY OF QUANTITIES – 4	85	GR02	GRADING PLAN – 2	155	CH04	CHANNELIZATION PLAN – 4
16	SQ05	SUMMARY OF QUANTITIES – 5	86	GR03	GRADING PLAN – 3	156	CH05	CHANNELIZATION PLAN – 5
17	SQ06	SUMMARY OF QUANTITIES – 6	87	GR04	GRADING PLAN – 4	157	CH06	CHANNELIZATION PLAN – 6
18	SQ07	SUMMARY OF QUANTITIES – 7	88	GR05	GRADING PLAN – 5	158	LS01	ARCHITECTURAL LAYOUT PLAN – 1
19	RS01	TYPICAL ROADWAY SECTIONS – 1	89	GR06	GRADING PLAN – 6	159	LS02	ARCHITECTURAL LAYOUT PLAN – 2
20	RS02	TYPICAL ROADWAY SECTIONS – 2	90	DN01	DRAINAGE STRUCTURE NOTES – 1	160	LS03	PEDESTRIAN LANDING PLANS
21	RS03	TYPICAL ROADWAY SECTIONS – 3	91	DN02	DRAINAGE STRUCTURE NOTES – 2	161	LS04	PEDESTRIAN LANDING FRAMING PLANS
22	RS04	TYPICAL ROADWAY SECTIONS – 4	92	DN03	DRAINAGE STRUCTURE NOTES – 3	162	LS05	PEDESTRIAN LANDING STRUCTURAL DETAILS – 1
23	RS05	TYPICAL ROADWAY SECTIONS – 5	93	DN04	DRAINAGE STRUCTURE NOTES – 4	163	LS06	PEDESTRIAN LANDING STRUCTURAL DETAILS – 2
24	AL01	ALIGNMENT AND RIGHT OF WAY PLAN – 1	94	DN05	DRAINAGE STRUCTURE NOTES – 5	164	LS07	PEDESTRIAN LANDING RAILING DETAILS
25	AL02	ALIGNMENT AND RIGHT OF WAY PLAN – 2	95	DN06	DRAINAGE STRUCTURE NOTES – 6	165	LS08	GEAR BOX ASSEMBLY DETAILS
26	AL03	ALIGNMENT AND RIGHT OF WAY PLAN – 3	96	DN07	DRAINAGE STRUCTURE NOTES – 7	166	LS09	BRICK PAVING DETAILS
27	AL04	ALIGNMENT AND RIGHT OF WAY PLAN – 4	97	DN08	DRAINAGE STRUCTURE NOTES – 8	167	LS10	INTERPRETIVE SIGN/BOLLARD DETAILS
28	AL05	ALIGNMENT AND RIGHT OF WAY PLAN – 5	98	DN09	DRAINAGE STRUCTURE NOTES – 9	168	LS11	BALUSTRADE/LIGHT DETAILS
29	AL06	ALIGNMENT AND RIGHT OF WAY PLAN – 6	99	DR01	DRAINAGE PLAN – 1	169	LS12	PLANTING LAYOUT PLAN – 1
30	AL07	ALIGNMENT AND RIGHT OF WAY PLAN – 7	100	DR02	DRAINAGE PLAN – 2	170	LS13	PLANTING LAYOUT PLAN – 2
31	AL08	ALIGNMENT AND RIGHT OF WAY PLAN – 8	101	DR03	DRAINAGE PLAN – 3	171	LS14	PLANTING LAYOUT PLAN – 3
32	AL09	ALIGNMENT AND RIGHT OF WAY PLAN – 9	102	DR04	DRAINAGE PLAN – 4	172	LS15	PLANTING AND BOULDER SCHEDULE
33	AL10	SURVEY CONTROL AND MONUMENTATION	103	DR05	DRAINAGE PLAN – 5	173	LS16	PLANTING DETAILS
34	SA01	STAGING AREAS AND CONSTRUCTION LIMITS	104	DR06	DRAINAGE PLAN – 6	174	LM01	SOUTH SHORELINE RESTORATION PLANTING PLAN
35	SP01	SITE PREPARATION PLAN – 1	105	DP01	DRAINAGE PROFILE – 1	175	LM02	SOUTH SHORELINE RESTORATION PLANTING DETAILS AND SCHEDULE
36	SP02	SITE PREPARATION PLAN – 2	106	DP02	DRAINAGE PROFILE – 2	176	LM03	SOUTH SHORELINE RESTORATION SECTION PROFILES
37	SP03	SITE PREPARATION PLAN – 3	107	DP03	DRAINAGE PROFILE – 3	177	LM04	NORTH SHORELINE RESTORATION PLANTING PLAN AND DETAIL
38	SP04	SITE PREPARATION PLAN – 4	108	DP04	DRAINAGE PROFILE – 4	178	TC01	TEMPORARY TRAFFIC CONTROL – SOUTH – STAGE 1
39	SP05	SITE PREPARATION PLAN – 5	109	DP05	DRAINAGE PROFILE – 5	179	TC02	TEMPORARY TRAFFIC CONTROL – SOUTH – STAGE 2
40	SP06	SITE PREPARATION PLAN – 6	110	DP06	DRAINAGE PROFILE – 6	180	TC03	TEMPORARY TRAFFIC CONTROL – NORTH
41	SP07	SITE PREPARATION DETAILS	111	DP07	DRAINAGE PROFILE – 7	181	TC04	TEMPORARY SIGNAL REVISION STAGE 1
42	EN01	EROSION CONTROL STRUCTURE NOTES – 1	112	DP08	DRAINAGE PROFILE – 8	182	TC05	TEMPORARY SIGNAL REVISION STAGE 2
43	EC01	EROSION CONTROL PLAN – GENERAL – 1	113	DP09	DRAINAGE PROFILE – 9	183	TC06	TEMPORARY SIGNAL REVISION FINAL STAGE
44	EC02	EROSION CONTROL PLAN – GENERAL – 2	114	DD01	DRAINAGE DETAILS – 1	184	TC07	TEMPORARY TRAFFIC CONTROL DETAILS
45	EC03	EROSION CONTROL PLAN – GENERAL – 3	115	DD02	DRAINAGE DETAILS – 2			
46	EC04	EROSION CONTROL PLAN – PHASE 1 – 1	116	DD03	DRAINAGE DETAILS – 3			
47	EC05	EROSION CONTROL PLAN – PHASE 1 – 2	117	DD04	DRAINAGE DETAILS – 4			
48	EC06	EROSION CONTROL PLAN – PHASE 1 – 3	118	DD05	DRAINAGE DETAILS – 5			
49	EC07	EROSION CONTROL PLAN – PHASE 2 – 1	119	DD06	DRAINAGE DETAILS – 6			
50	EC08	EROSION CONTROL PLAN – PHASE 2 – 2	120	DD07	DRAINAGE DETAILS – 7			
51	EC09	EROSION CONTROL PLAN – PHASE 2 – 3	121	DD08	DRAINAGE DETAILS – 8			
52	ED01	EROSION CONTROL DETAILS – 1	122	DD09	DRAINAGE DETAILS – 9			
53	ED02	EROSION CONTROL DETAILS – 2	123	DD10	DRAINAGE DETAILS – 10			
54	ED03	EROSION CONTROL DETAILS – 3	124	DD11	DRAINAGE DETAILS – 11			
55	RD01	ROADWAY PLAN AND PROFILE – 1	125	IL01	ILLUMINATION PLAN – 1			
56	RD02	ROADWAY PLAN AND PROFILE – 2	126	IL02	ILLUMINATION PLAN – 2			
57	RD03	ROADWAY PLAN AND PROFILE – 3	127	IL03	ILLUMINATION PLAN – 3			
58	RD04	ROADWAY PLAN AND PROFILE – 4	128	IL04	ILLUMINATION PLAN – 4			
59	RD05	ROADWAY PLAN AND PROFILE – 5	129	IL05	ILLUMINATION PLAN – 5			
60	RD06	ROADWAY PLAN AND PROFILE – 6	130	IL06	ILLUMINATION POLE FOUNDATIONS – 1			
61	RD07	ROADWAY PLAN AND PROFILE – 7	131	IL07	ILLUMINATION POLE FOUNDATIONS – 2			
62	RD08	ROADWAY PLAN AND PROFILE – 8	132	IL08	ILLUMINATION ENLARGED PLANS AND SECTIONS – 1			
63	RD09	ROADWAY PLAN AND PROFILE – 9	133	IL09	ILLUMINATION ENLARGED PLANS AND SECTIONS – 2			
64	RD10	ROADWAY DETAILS – 1	134	IL10	ILLUMINATION DETAILS			
65	RD11	ROADWAY DETAILS – 2	135	IL11	ILLUMINATION PANEL SCHEDULES AND LOAD CALCULATIONS			
66	RD12	ROADWAY DETAILS – 3	136	IL12	ILLUMINATION CONDUIT AND WIRE SCHEDULE			
67	RD13	ROADWAY DETAILS – 4	137	UT01	UTILITY NOTES – 1			
68	RD14	ROADWAY DETAILS – 5	138	UT02	UTILITY NOTES – 2			
69	RD15	ROADWAY DETAILS – 6	139	UT03	UTILITY PLANS – 1			
70	SF01	FENCING PLAN – 1	140	UT04	UTILITY PLANS – 2			

FIELD BOOK:				
SURVEYED:				
SURVEY BASE MAP:				
DESIGN ENTERED:	J. RODRIGUEZ	05/2009		
DESIGNED	E. DROLLINGER	05/2009		
CHECKED:	J. RODRIGUEZ	01/2010		
SUPERVISOR:	R. JOHNSON	01/2010		

NUM.	REVISION	BY	DATE

RICHARD M. JOHNSON — STATE OF WASHINGTON — 43017 — REGISTERED PROFESSIONAL ENGINEER

HNTB

FED. AID No. _____

PROJECT No. 300197

SURVEY No. 32-24-4-22

MAINTENANCE DIVISION No. 3

KING COUNTY DEPT. OF TRANSPORTATION

HAROLD TANIGUCHI, DIRECTOR

SOUTH PARK BRIDGE #3179 REPLACEMENT

INDEX OF SHEETS – VOLUME 1

King County

GN04

SHEET 520 OF 667 SHEETS

316-63 (____)

INDEX OF SHEETS - VOLUME 2

SHT. No.	SHEET	TITLE	SHT. No.	SHEET	TITLE	SHT. No.	SHEET	TITLE
185	GN01	TITLE SHEET	255	AS49	FASCIA TRUSS ELEVATIONS			
186	GN02	VICINITY MAP / KEY MAP	256	AS50	FASCIA TRUSS – TYPICAL SECTION AND SPLICING DETAILS			
187	GN03	LEGEND AND ABBREVIATIONS	257	AS51	FASCIA TRUSS – TRAFFIC GATE STEEL BRACKET			
188	GN04	INDEX OF SHEETS – VOLUME 1	258	AS52	FASCIA TRUSS DETAILS – LATERAL BRACING – 1			
189	GN05	INDEX OF SHEETS – VOLUME 2	259	AS53	FASCIA TRUSS DETAILS – LATERAL BRACING – 2			
190	GN06	INDEX OF SHEETS – VOLUME 3	260	AS54	FASCIA TRUSS – BEARING DETAILS			
191	GN07	INDEX OF SHEETS – VOLUME 4	261	AS55	EXPANSION JOINT DETAILS – PIERS 3 & 4			
192	GN08	INDEX OF SHEETS ALPHANUMERIC – 1	262	AS56	JOINT SEALS AT ABUMENTS 1 & 6			
193	GN09	INDEX OF SHEETS ALPHANUMERIC – 2	263	AS57	APPROACH SLAB DETAILS – 1			
194	GN10	INDEX OF SHEETS ALPHANUMERIC – 3	264	AS58	APPROACH SLAB DETAILS – 2			
195	GN11	INDEX OF SHEETS ALPHANUMERIC – 4	265	AS59	BEARING DETAILS – PIERS 3 & 4			
196	BG01	GENERAL PLAN AND ELEVATION	266	AS60	BEARING DETAILS – ABUTMENTS 1 & 6			
197	BG02	GENERAL ARCH. ELEV. – WEST VIEW	267	AS61	TRAFFIC SIGNAL POLE ANCHORAGE DETAILS			
198	BG03	GENERAL ARCH. ELEV. – EAST VIEW	268	AS63	UTILITY ON BRIDGE – SOUTH APPROACH			
199	BG04	BASCULE BRIDGE PLAN AND ELEVATION	269	AS64	UTILITY ON BRIDGE – NORTH APPROACH			
200	BG05	GENERAL NOTES – 1	270	AS65	UTILITY ON BRIDGE – UTILITY HANGER DETAILS – 1			
201	BG06	GENERAL NOTES – 2	271	AS66	UTILITY ON BRIDGE – UTILITY HANGER DETAILS – 2			
202	SB01	SOIL BORINGS – 1	272	PP01	BASCULE PIER FENDER SYSTEM LAYOUT PLAN			
203	SB02	SOIL BORINGS – 2	273	PP02	BASCULE PIER FENDER SYSTEM GENERAL NOTES AND BILL OF MATERIALS			
204	SB03	SOIL BORINGS – 3	274	PP03	BASCULE PIER FENDER SYSTEM PARTIAL PLAN & ELEVATION VIEW			
205	SB04	SOIL BORINGS – 4	275	PP04	BASCULE PIER FENDER SYSTEM DETAILS – 1			
206	SB05	SOIL BORINGS – 5	276	PP05	BASCULE PIER FENDER SYSTEM DETAILS – 2			
207	AS01	BRIDGE LAYOUT – SOUTH APPROACH	277	PP06	BASCULE PIER FENDER SYSTEM DETAILS – 3			
208	AS02	BRIDGE LAYOUT – NORTH APPROACH	278	PP07	BASCULE PIER FENDER SYSTEM DETAILS – 4			
209	AS03	FOUNDATION PLAN – SOUTH APPROACH	279	CS15	CONSTRUCTION / DEMOLITION SEQUENCE – 1			
210	AS04	FOUNDATION PLAN – NORTH APPROACH	280	CS17	CONSTRUCTION / DEMOLITION SEQUENCE – 2			
211	AS05	ABUTMENT 1 DRILLED SHAFT DETAILS	281	CS18	CONSTRUCTION / DEMOLITION SEQUENCE – 3			
212	AS06	PIER 2 DRILLED SHAFT DETAILS	282	CS19	CONSTRUCTION / DEMOLITION SEQUENCE – 4			
213	AS07	PIER 5 DRILLED SHAFT DETAILS	283	CS20	CONSTRUCTION / DEMOLITION SEQUENCE – 5			
214	AS08	ABUTMENT 6 DRILLED SHAFT DETAILS	284	CS21	CONSTRUCTION / DEMOLITION SEQUENCE – 6			
215	AS09	ABUTMENT 1 PLAN AND ELEVATIONS	285	CS22	BASCULE PIER CONSTRUCTION SEQUENCE – 1			
216	AS10	ABUTMENT 1 DETAILS	286	CS23	BASCULE PIER CONSTRUCTION SEQUENCE – 2			
217	AS11	ABUTMENT 1 WING WALLS	287	CS24	BASCULE PIER CONSTRUCTION SEQUENCE – 3			
218	AS12	PIER 2 PLAN AND ELEVATIONS	288	CS25	BASCULE PIER CONSTRUCTION SEQUENCE – 4			
219	AS13	PIER 2 COLUMN DETAILS	289	CS27	SUGGESTED CONSTRUCTION SEQUENCE			
220	AS14	PIER 2 CROSSBEAM DETAILS – 1	290	DM02	BASCULE SPAN REMOVAL			
221	AS15	PIER 2 CROSSBEAM DETAILS – 2	291	DM03	EXISTING APPROACH REMOVAL			
222	AS16	PIER 5 PLAN AND SECTION	292	DM04	SALVAGE PLAN OF EXISTING – 1			
223	AS17	PIER 5 ELEVATIONS	293	DM05	SALVAGE PLAN OF EXISTING – 2			
224	AS18	PIER 5 COLUMN DETAILS	294	DM06	SALVAGE PLAN OF EXISTING – 3			
225	AS19	PIER 5 CROSSBEAM DETAILS – 1	295	DM07	SALVAGE PLAN OF EXISTING – 4			
226	AS20	PIER 5 CROSSBEAM DETAILS – 2						
227	AS21	ABUTMENT 6 PLAN AND ELEVATIONS						
228	AS22	ABUTMENT 6 DETAILS						
229	AS23	ABUTMENT 6 WING WALLS						
230	AS24	SOUTH APPROACH SPAN – FRAMING PLAN						
231	AS25	NORTH APPROACH SPAN – FRAMING PLAN						
232	AS26	WF74G GIRDERS AT PIERS 2 AND 5						
233	AS27	WF74G GIRDERS AT BASCULE PIERS 3 AND 4						
234	AS28	SOUTH APPROACH SPAN – TYPICAL SECTION AT MID SPAN						
235	AS29	SOUTH APPROACH SPAN – TYPICAL SECTION AT PIER 2						
236	AS30	SOUTH APPROACH SPAN 1 – ROADWAY DECK						
237	AS31	SOUTH APPROACH SPAN 2 – ROADWAY DECK						
238	AS32	NORTH APPROACH SPAN – TYPICAL SECTION AT MID SPAN						
239	AS33	NORTH APPROACH SPAN – TYPICAL SECTION AT PIER 5						
240	AS34	NORTH APPROACH SPAN 4 – ROADWAY DECK						
241	AS35	NORTH APPROACH SPAN 5 – ROADWAY DECK						
242	AS36	TRAFFIC GATE PLATFORM – PLAN AND ELEVATIONS						
243	AS37	APPROACH SPAN – WF74G GIRDER DETAILS – 1						
244	AS38	APPROACH SPAN – WF74G GIRDER DETAILS – 2						
245	AS39	APPROACH SPAN – WF74G GIRDER DETAILS – 3						
246	AS40	APPROACH SPAN – WF74G GIRDER DETAILS – 4						
247	AS41	APPROACH SPAN – WF74G GIRDER DETAILS – 5						
248	AS42	APPROACH SPAN – INTERMEDIATE DIAPHRAGM DETAILS						
249	AS43	TRAFFIC GATE PLATFORM AND DIAPHRAGM DETAILS						
250	AS44	APPROACH SPAN – END DIAPHRAGMS, ABUTMENT 1						
251	AS45	APPROACH SPAN – END DIAPHRAGMS, PIERS 3 & 4						
252	AS46	APPROACH SPAN – END DIAPHRAGMS, ABUTMENT 6						
253	AS47	FASCIA TRUSS LAYOUT – SOUTH APPROACH						
254	AS48	FASCIA TRUSS LAYOUT – NORTH APPROACH						

FIELD BOOK: _____
SURVEYED: _____
SURVEY BASE MAP: _____
DESIGN ENTERED: J. RODRIGUEZ 05/2009
DESIGNED E. DROLLINGER 05/2009
CHECKED: J. RODRIGUEZ 01/2010
SUPERVISOR: R. JOHNSON 01/2010

NUM.	REVISION	BY	DATE

RICHARD M. JOHNSON — STATE OF WASHINGTON — 43017 — REGISTERED PROFESSIONAL ENGINEER

HNTB

FED. AID No. _____
PROJECT No. 300197
SURVEY No. 32-24-4-22
MAINTENANCE DIVISION No. 3

KING COUNTY DEPT. OF TRANSPORTATION
HAROLD TANIGUCHI, DIRECTOR
SOUTH PARK BRIDGE #3179 REPLACEMENT
INDEX OF SHEETS – VOLUME 2

King County

GN05
SHEET 521 OF 667 SHEETS
316-63 (____)

INDEX OF SHEETS - VOLUME 3

SHT. No.	SHEET	TITLE
296	GN01	TITLE SHEET
297	GN02	VICINITY MAP / KEY MAP
298	GN03	LEGEND AND ABBREVIATIONS
299	GN04	INDEX OF SHEETS – VOLUME 1
300	GN05	INDEX OF SHEETS – VOLUME 2
301	GN06	INDEX OF SHEETS – VOLUME 3
302	GN07	INDEX OF SHEETS – VOLUME 4
303	GN08	INDEX OF SHEETS ALPHANUMERIC – 1
304	GN09	INDEX OF SHEETS ALPHANUMERIC – 2
305	GN10	INDEX OF SHEETS ALPHANUMERIC – 3
306	GN11	INDEX OF SHEETS ALPHANUMERIC – 4
307	BG01	GENERAL PLAN AND ELEVATION
308	BG02	GENERAL ARCH. ELEV. – WEST VIEW
309	BG03	GENERAL ARCH. ELEV. – EAST VIEW
310	BG04	BASCULE BRIDGE PLAN AND ELEVATION
311	BC01	BASCULE PIER CAISSON – PIERS 3 & 4 FOUNDATION LAYOUT PLAN
312	BC02	BASCULE PIER CAISSON – PIER 3 CAISSON ELEVATION – 1
313	BC03	BASCULE PIER CAISSON – PIER 3 CAISSON ELEVATION – 2
314	BC04	BASCULE PIER CAISSON – PIER 4 CAISSON ELEVATION – 1
315	BC05	BASCULE PIER CAISSON – PIER 4 CAISSON ELEVATION – 2
316	BC06	BASCULE PIER CAISSON – PIERS 3 & 4 CAISSON PLAN
317	BC07	BASCULE PIER CAISSON – PIERS 3 & 4 CAISSON CAP PLAN & ELEVATION
318	BC08	BASCULE PIER CAISSON – PIERS 3 & 4 CUTTING EDGE REINF. ELEVATION – 1
319	BC09	BASCULE PIER CAISSON – PIERS 3 & 4 CUTTING EDGE REINF. ELEVATION – 2
320	BC10	BASCULE PIER CAISSON – PIERS 3 & 4 CAISSON CUTTING EDGE REINF. SECTIONS
321	BC11	BASCULE PIER CAISSON – PIER 3 CAISSON REINF. ELEVATIONS – 1
322	BC12	BASCULE PIER CAISSON – PIER 3 CAISSON REINF. ELEVATIONS – 2
323	BC13	BASCULE PIER CAISSON – PIER 3 CAISSON REINF. SECTIONS
324	BC14	BASCULE PIER CAISSON – PIER 4 CAISSON REINF. ELEVATION 1
325	BC15	BASCULE PIER CAISSON – PIER 4 CAISSON REINF. ELEVATION 2
326	BC16	BASCULE PIER CAISSON – PIER 4 CAISSON REINF. SECTIONS
327	BC17	BASCULE PIER CAISSON – PIERS 3 & 4 CAISSON REINF. SECTIONS
328	BC18	BASCULE PIER CAISSON – PIERS 3 & 4 CAISSON CAP CONST. SEQUENCE PLAN
329	BC19	BASCULE PIER CAISSON – PIERS 3 & 4 CAISSON WALL 1 REINF. ELEVATION
330	BC20	BASCULE PIER CAISSON – PIERS 3 & 4 CAISSON WALL 2 REINF. ELEVATION
331	BC21	BASCULE PIER CAISSON – PIERS 3 & 4 CAISSON WALL 3 REINF. ELEVATION
332	BC22	BASCULE PIER CAISSON – PIERS 3 & 4 CAISSON WALL 4 REINF. ELEVATION
333	BC23	BASCULE PIER CAISSON – PIERS 3 & 4 CAISSON CAP REINF. PLAN – 1
334	BC24	BASCULE PIER CAISSON – PIERS 3 & 4 CAISSON CAP REINF. PLAN – 2
335	BC25	BASCULE PIER CAISSON – PIERS 3 & 4 CAISSON CAP REINF. SECTION –1
336	BC26	BASCULE PIER CAISSON – PIERS 3 & 4 CAISSON CAP REINF. SECTION – 2
337	BC27	BASCULE PIER CAISSON – PIERS 3 & 4 CAISSON WALLS 1 & 2 REINF. SECTIONS
338	BC28	BASCULE PIER CAISSON – PIERS 3 & 4 CAISSON WALLS 3 & 4 REINF. SECTIONS
339	BC29	BASCULE PIER CAISSON – PIERS 3 & 4 CAISSON CAP SUMP PIT DETAILS
340	BC30	BASCULE PIER CAISSON – PIERS 3 & 4 DREDGE WELL ACCESS DETAILS
341	BC31	BASCULE PIER CAISSON – PIERS 3 & 4 CAISSON SECTIONS & DETAILS – 1
342	BC32	BASCULE PIER CAISSON – PIERS 3 & 4 CAISSON SECTIONS & DETAILS – 2
343	BP01	BASCULE PIER – PIERS 3 & 4 WALL 1 ELEVATION
344	BP02	BASCULE PIER – PIERS 3 & 4 WALL 2 ELEVATION
345	BP03	BASCULE PIER – PIERS 3 & 4 WALL 3 ELEVATION
346	BP04	BASCULE PIER – PIERS 3 & 4 WALL 4 ELEVATION
347	BP05	BASCULE PIER – PIERS 3 & 4 LONGITUDINAL SECTION E
348	BP06	BASCULE PIER – PIERS 3 & 4 LONGITUDINAL SECTION F
349	BP07	BASCULE PIER – PIERS 3 & 4 TRANSVERSE SECTION A
350	BP08	BASCULE PIER – PIERS 3 & 4 TRANSVERSE SECTION B
351	BP09	BASCULE PIER – PIERS 3 & 4 – FOOTING LEVEL PLAN
352	BP10	BASCULE PIER – PIERS 3 & 4 – MACHINE LEVEL PLAN
353	BP11	BASCULE PIER – PIERS 3 & 4 – EQUIPMENT LEVEL PLAN
354	BP12	BASCULE PIER – PIERS 3 & 4 – ROADWAY LEVEL PLAN
355	BP13	BASCULE PIER – PIERS 3 & 4 MACHINE LEVEL REINF. PLAN AND SECTION
356	BP14	BASCULE PIER – PIERS 3 & 4 MACHINE LEVEL REINF. SECTIONS – 1
357	BP15	BASCULE PIER – PIERS 3 & 4 MACHINE LEVEL REINF. SECTIONS – 2
358	BP16	BASCULE PIER – PIERS 3 & 4 EQUIPMENT LEVEL REINF. PLAN AND SECTION
359	BP17	BASCULE PIER – PIERS 3 & 4 EQUIPMENT LEVEL REINF. SECTIONS – 1
360	BP18	BASCULE PIER – PIERS 3 & 4 EQUIPMENT LEVEL REINF. SECTIONS – 2
361	BP19	BASCULE PIER – PIERS 3 & 4 EQUIPMENT LEVEL REINF. SECTIONS – 3
362	BP20	BASCULE PIER – PIERS 3 & 4 ROADWAY LEVEL REINF. PLAN
363	BP21	BASCULE PIER – PIERS 3 & 4 ROADWAY LEVEL REINF. PLAN AND SECTIONS
364	BP22	BASCULE PIER – PIERS 3 & 4 ROADWAY LEVEL REINF. SECTIONS – 1
365	BP23	BASCULE PIER – PIERS 3 & 4 ROADWAY LEVEL REINF. SECTIONS – 2
366	BP24	BASCULE PIER – PIERS 3 & 4 ROADWAY LEVEL REINF. SECTIONS – 3
367	BP25	BASCULE PIER – PIERS 3 & 4 ROADWAY LEVEL REINF. SECTIONS – 4
368	BP26	BASCULE PIER – PIERS 3 & 4 ROADWAY LEVEL REINF. SECTIONS – 5
369	BP27	BASCULE PIER – PIERS 3 & 4 WALL 1 REINF. ELEVATION
370	BP28	BASCULE PIER – PIERS 3 & 4 WALL 1 REINF. SECTIONS – 1
371	BP29	BASCULE PIER – PIERS 3 & 4 WALL 1 REINF. SECTIONS – 2
372	BP30	BASCULE PIER – PIERS 3 & 4 WALL 2 REINF. ELEVATION
373	BP31	BASCULE PIER – PIERS 3 & 4 WALL 2 REINF. SECTIONS – 1
374	BP32	BASCULE PIER – PIERS 3 & 4 WALL 2 REINF. SECTIONS – 2
375	BP33	BASCULE PIER – PIERS 3 & 4 WALL 3 REINF. ELEVATION
376	BP34	BASCULE PIER – PIERS 3 & 4 WALL 3 REINF. SECTIONS – 1
377	BP35	BASCULE PIER – PIERS 3 & 4 WALL 3 REINF. SECTIONS – 2
378	BP36	BASCULE PIER – PIERS 3 & 4 WALL 4 REINF. ELEVATION
379	BP37	BASCULE PIER – PIERS 3 & 4 WALL 4 REINF. SECTIONS – 1
380	BP38	BASCULE PIER – PIERS 3 & 4 WALL 4 REINF. SECTIONS – 2
381	BP39	BASCULE PIER – PIERS 3 & 4 WALL 5 & 6 REINF. ELEVATION
382	BP40	BASCULE PIER – PIERS 3 & 4 WALL 5 & 6 REINF. SECTIONS – 1
383	BP41	BASCULE PIER – PIERS 3 & 4 WALL 5 & 6 REINF. SECTIONS – 2
384	BP42	BASCULE PIER – PIERS 3 & 4 ROADWAY LEVEL ACCESS HATCH
385	BP43	BASCULE PIER – PIERS 3 & 4 STAIR DETAILS
386	BP44	BASCULE PIER – PIERS 3 & 4 STAIR LANDING DETAILS
387	BP45	BASCULE PIER – PIERS 3 & 4 WALKWAY TO PIER PROTECTION
388	CT01	CONTROL TOWER PIERS 3 & 4 ARCHITECTUAL GENERAL NOTES
389	CT02	CONTROL TOWER PIERS 3 & 4 WALL ELEVATIONS 7 & 9
390	CT03	CONTROL TOWER PIERS 3 & 4 WALL ELEVATIONS 8 & 10
391	CT04	CONTROL TOWER PIERS 3 & 4 EQUIPMENT LEVEL FLOOR PLAN
392	CT05	CONTROL TOWER PIERS 3 & 4 ROADWAY LEVEL FLOOR PLAN
393	CT06	CONTROL TOWER PIERS 3 & 4 OPERATOR LEVEL FLOOR & CEILING PLAN
394	CT07	CONTROL TOWER PIERS 3 & 4 ROOF PLAN & DETAILS
395	CT08	CONTROL TOWER PIERS 3 & 4 LONGITUDINAL SECTION A & B
396	CT09	CONTROL TOWER PIERS 3 & 4 TRANSVERSE SECTION C
397	CT10	CONTROL TOWER PIERS 3 & 4 ARCHITECTURAL WALL SECTIONS
398	CT11	CONTROL TOWER PIERS 3 & 4 ARCHITECTURAL DETAILS – 1
399	CT12	CONTROL TOWER PIERS 3 & 4 ARCHITECTURAL DETAILS – 2
400	CT13	CONTROL TOWER PIERS 3 & 4 ARCHITECTURAL DETAILS – 3
401	CT14	CONTROL TOWER PIERS 3 & 4 ARCHITECTURAL DETAILS – 4
402	CT15	CONTROL TOWER PIERS 3 & 4 ARCHITECTURAL DETAILS – 5
403	CT16	CONTROL TOWER PIERS 3 & 4 DOOR & WINDOW SCHEDULE
404	CT17	CONTROL TOWER PIERS 3 & 4 OPERATOR LEVEL STRUCTURE PLAN
405	CT18	CONTROL TOWER PIERS 3 & 4 OPERATOR LEVEL REINF. PLAN
406	CT19	CONTROL TOWER PIERS 3 & 4 OPERATOR LEVEL REINF. SECTIONS – 1
407	CT20	CONTROL TOWER PIERS 3 & 4 OPERATOR LEVEL ROOF FRAMING PLAN
408	CT21	CONTROL TOWER PIERS 3 & 4 OPERATOR LEVEL DETAILS – 1
409	CT22	CONTROL TOWER PIERS 3 & 4 OPERATOR LEVEL DETAILS – 2
410	CT23	CONTROL TOWER PIERS 3 & 4 OPERATOR LEVEL DETAILS – 3
411	CT24	CONTROL TOWER PIERS 3 & 4 OPERATOR LEVEL DETAILS – 4
412	CT25	CONTROL TOWER PIERS 3 & 4 WALLS 8 & 9 REINFORCEMENT
413	CT26	CONTROL TOWER PIERS 3 & 4 WALLS 7 & 10 REINFORCEMENT
414	CT27	CONTROL TOWER PIERS 3 & 4 WALL SECTIONS – 1
415	CT28	CONTROL TOWER PIERS 3 & 4 WALL SECTIONS – 2
416	CT29	CONTROL TOWER PIERS 3 & 4 WALL SECTIONS – 3
417	TF01	TRUNNION FRAME ELEVATION VIEW 1
418	TF02	TRUNNION FRAME ELEVATION VIEW 2
419	TF03	TRUNNION FRAME ELEVATION VIEWS 3 & 4
420	TF04	TRUNNION FRAME DETAILS – 1
421	TF04A	TRUNNION FRAME DETAILS – 1A
422	TF05	TRUNNION FRAME DETAILS – 2
423	TF06	TRUNNION FRAME DETAILS – 3
424	TF07	TRUNNION FRAME DETAILS – 4
425	TF08	TRUNNION FRAME DETAILS – 5
426	TF09	TRUNNION FRAME DETAILS – 6
427	TF10	TRUNNION FRAME LIVE LOAD SHOE BRACKET DETAILS
428	TF11	TRUNNION FRAME HOLD DOWN DEVICE DETAILS
429	TF11A	TRUNNION FRAME MACHINE SLAB – 1
430	TF11B	TRUNNION FRAME MACHINE SLAB – 2
431	TF11C	TRUNNION FRAME BUMPER BLOCK DETAILS
432	TF12	TRUNNION FRAME MAINTENANCE PLATFORM PLAN – 1
433	TF13	TRUNNION FRAME MAINTENANCE PLATFORM PLAN – 2
434	TF14	TRUNNION FRAME MAINTENANCE PLATFORM PLAN – 3
435	TF15	TRUNNION FRAME MAINTENANCE PLATFORM PLAN – 4
436	TF16	TRUNNION FRAME MAINTENANCE PLATFORM DETAILS – 1
437	TF17	TRUNNION FRAME MAINTENANCE PLATFORM DETAILS – 2
438	TF18	TRUNNION FRAME MAINTENANCE PLATFORM DETAILS – 3
439	TF19	TRUNNION FRAME PIER PROTECTION ACCESS PLAN AND DETAILS
440	BL01	BASCULE SPAN SOUTH LEAF FRAMING PLAN
441	BL02	BASCULE SPAN NORTH LEAF FRAMING PLAN
442	BL03	BASCULE SPAN TYPICAL SECTIONS
443	BL04	BASCULE SPAN OPENING DIAGRAM
444	BL05	BASCULE SPAN BASCULE GIRDER PLAN AND ELEVATION
445	BL06	BASCULE SPAN GIRDER GEOMETRY
446	BL07	BASCULE SPAN GIRDER CAMBER TABLES
447	BL08	BASCULE SPAN GIRDER STIFFENER DETAILS
448	BL09	BASCULE SPAN BOLTED SPLICE DETAILS
449	BL10	BASCULE SPAN GIRDER DETAILS – 1
450	BL11	BASCULE SPAN GIRDER DETAILS – 2
451	BL12	BASCULE SPAN FLOORBEAM ELEVATIONS – 1
452	BL12A	BASCULE SPAN FLOORBEAM ELEVATIONS – 1A
453	BL13	BASCULE SPAN FLOORBEAM ELEVATIONS – 2
454	BL14	BASCULE SPAN FLOORBEAM ELEVATIONS – 3
455	BL15	BASCULE SPAN FLOORBEAM DETAILS – 1
456	BL16	BASCULE SPAN FLOORBEAM DETAILS – 2
457	BL17	BASCULE SPAN CANTILEVER BRACKET DETAILS – 1
458	BL18	BASCULE SPAN CANTILEVER BRACKET DETAILS – 2
459	BL19	BASCULE SPAN CANTILEVER BRACKET DETAILS – 3
460	BL20	BASCULE SPAN COUNTERWEIGHT FLOORBEAM FB0 ELEVATION
461	BL21	BASCULE SPAN COUNTERWEIGHT FLOORBEAM FB1 ELEVATION
462	BL22	BASCULE SPAN COUNTERWEIGHT FLOORBEAM FB2 ELEVATION
463	BL23	BASCULE SPAN COUNTERWEIGHT FLOORBEAM DETAILS
464	BL24	BASCULE SPAN COUNTERWEIGHT SECTIONS AND DETAILS
465	BL25	BASCULE SPAN COUNTERWEIGHT FORM PLATE PLAN
466	BL26	BASCULE SPAN COUNTERWEIGHT POCKET DETAILS
467	BL27	BASCULE SPAN COUNTERWEIGHT UPPER BRACING PLAN
468	BL28	BASCULE SPAN COUNTERWEIGHT DETAILS – 1
469	BL29	BASCULE SPAN COUNTERWEIGHT DETAILS – 2
470	BL30	BASCULE SPAN COUNTERWEIGHT DETAILS – 3
471	BL31	BASCULE SPAN COUNTERWEIGHT DETAILS – 4
472	BL32	BASCULE SPAN BALANCE TABLES
473	BL33	BASCULE SPAN BRACING DETAILS – 1
474	BL34	BASCULE SPAN BRACING DETAILS – 2
475	BL35	BASCULE SPAN BRACING DETAILS – 3
476	BL36	BASCULE SPAN BRACING DETAILS – 4
477	BL37	BASCULE SPAN BRACING DETAILS – 5
478	BL37A	BASCULE SPAN BRACING DETAILS – 5A
479	BL38	BASCULE SPAN BRACING DETAILS – 6
480	BL38A	BASCULE SPAN BRACING DETAILS – 7
481	BL39	BASCULE SPAN MISCELLANEOUS STEEL DETAILS – 1
482	BL39A	BASCULE SPAN MISCELLANEOUS STEEL DETAILS – 1A
483	BL40	BASCULE SPAN MISCELLANEOUS STEEL DETAILS – 2
484	BL41	BASCULE SPAN SIDEWALK CURB DETAILS
485	BL42	BASCULE SPAN BIRD CONTROL DETAILS
486	BL43	BASCULE SPAN JOINT DETAILS – 1
487	BL44	BASCULE SPAN JOINT DETAILS – 2
488	BL45	BASCULE SPAN JOINT DETAILS – 3
489	BL46	BASCULE SPAN JOINT DETAILS – 4
490	BL47	BASCULE SPAN JOINT DETAILS – 5
491	BL48	BASCULE SPAN JOINT DETAILS – 6
492	BL49	BASCULE SPAN JOINT DETAILS – 7
493	BL49A	BASCULE SPAN JOINT DETAILS – 7A
494	BL49B	BASCULE SPAN JOINT DETAILS – 7B
495	BL50	BASCULE SPAN MAINTENANCE WALKWAY LAYOUT
496	BL51	BASCULE SPAN MAINTENANCE WALKWAY DETAILS – 1
497	BL52	BASCULE SPAN MAINTENANCE WALKWAY DETAILS – 2
498	BL53	BASCULE SPAN MAINTENANCE WALKWAY DETAILS – 3
499	BL54	BASCULE SPAN SOUTH LEAF ROADWAY PLAN
500	BL55	BASCULE SPAN SOUTH LEAF DECK PLAN
501	BL56	BASCULE SPAN NORTH LEAF ROADWAY PLAN
502	BL57	BASCULE SPAN NORTH LEAF DECK PLAN
503	BL58	BASCULE SPAN DECK SECTIONS
504	BL59	BASCULE SPAN ROADWAY DECK DETAILS – 1
505	BL60	BASCULE SPAN ROADWAY DECK DETAILS – 2
506	BL61	BASCULE SPAN SIDEWALK DETAILS
507	BL62	COUNTERWEIGHT SPAN FRAMING PLAN
508	BL63	COUNTERWEIGHT SPAN TYPICAL SECTION
509	BL64	COUNTERWEIGHT SPAN FLOORBEAM DETAILS – 1
510	BL65	COUNTERWEIGHT SPAN FLOORBEAM DETAILS – 2
511	BL66	COUNTERWEIGHT SPAN FRAMING DETAILS
512	BL67	COUNTERWEIGHT SPAN BEARING DETAILS
513	BL68	COUNTERWEIGHT SPAN JOINT DETAILS
514	BL69	COUNTERWEIGHT SPAN DECK PLAN
515	BL70	COUNTERWEIGHT SPAN DECK DETAILS – 1
516	BL71	COUNTERWEIGHT SPAN DECK DETAILS – 2

FIELD BOOK:					
SURVEYED:					
SURVEY BASE MAP:					
DESIGN ENTERED:	J. RODRIGUEZ	05/2009			
DESIGNED	E. DROLLINGER	05/2009			
CHECKED:	J. RODRIGUEZ	01/2010			
SUPERVISOR:	R. JOHNSON	01/2010	NUM.	REVISION	BY / DATE

RICHARD M. JOHNSON — STATE OF WASHINGTON — 43017 — REGISTERED PROFESSIONAL ENGINEER

HNTB

FED. AID No.

PROJECT No. 300197

SURVEY No. 32-24-4-22

MAINTENANCE DIVISION No. 3

KING COUNTY DEPT. OF TRANSPORTATION
HAROLD TANIGUCHI, DIRECTOR

SOUTH PARK BRIDGE #3179 REPLACEMENT

INDEX OF SHEETS – VOLUME 3

King County

GN06

SHEET 522 OF 667 SHEETS

316-63 (___)

INDEX OF SHEETS - VOLUME 4

SHT. No.	SHEET	TITLE	SHT. No.	SHEET	TITLE	SHT. No.	SHEET	TITLE
517	GN01	TITLE SHEET	587	FP05	FIRE PROTECTION PLANS – 5	657	BE52	WIRING SCHEDULE – 5
518	GN02	VICINITY MAP / KEY MAP	588	FP06	PIERS 3 & 4 FIRE PROTECTION EQUIPMENT LEVEL PLAN	658	BE53	WIRING SCHEDULE – 6
519	GN03	LEGEND AND ABBREVIATIONS	589	FP07	FIRE PROTECTION – SECTIONS	659	BE54	CIRCUIT SCHEDULE – 1
520	GN04	INDEX OF SHEETS – VOLUME 1	590	FP08	FIRE PROTECTION – HEAT TRACE DIAGRAM	660	BE55	CIRCUIT SCHEDULE – 2
521	GN05	INDEX OF SHEETS – VOLUME 2	591	FP09	FIRE PROTECTION DETAILS – 1	661	BE56	CIRCUIT SCHEDULE – 3
522	GN06	INDEX OF SHEETS – VOLUME 3	592	FP10	FIRE PROTECTION DETAILS – 2	662	BE57	RACEWAY SCHEDULE 1
523	GN07	INDEX OF SHEETS – VOLUME 4	593	BM01	GENERAL MACHINERY NOTES AND INDEX OF SHEETS	663	BE58	RACEWAY SCHEDULE 2
524	GN08	INDEX OF SHEETS ALPHANUMERIC – 1	594	BM02	OPERATING MACHINERY SCHEDULE	664	BE59	SUBMARINE CONDUIT LAYOUT – 1
525	GN09	INDEX OF SHEETS ALPHANUMERIC – 2	595	BM03	OPERATING MACHINERY LAYOUT	665	BE60	SUBMARINE CONDUIT LAYOUT – 2
526	GN10	INDEX OF SHEETS ALPHANUMERIC – 3	596	BM04	OPERATING MACHINERY SECTIONS – 1	666	AP01	TEMPORARY NOISE ATTENUATION PILE (TNAP)
527	GN11	INDEX OF SHEETS ALPHANUMERIC – 4	597	BM05	OPERATING MACHINERY SECTIONS – 2	667	AP02	TNAP DETAILS
528	BG01	GENERAL PLAN AND ELEVATION	598	BM06	OPERATING MACHINERY DETAILS			
529	BG02	GENERAL ARCH. ELEV. – WEST VIEW	599	BM07	OPERATING MACHINERY SUPPORTS – 1			
530	BG03	GENERAL ARCH. ELEV. – EAST VIEW	600	BM08	OPERATING MACHINERY SUPPORTS – 2			
531	BG04	BASCULE BRIDGE PLAN AND ELEVATION	601	BM09	RACK ASSEMBLY AND DETAILS			
532	PR01	PEDESTRIAN RAILING LAYOUT – 1	602	BM10	TRUNNION SHAFT ASSEMBLY AND DETAILS			
533	PR02	PEDESTRIAN RAILING LAYOUT – 2	603	BM11	TRUNNION BEARING ASSEMBLY AND DETAILS			
534	PR03	PEDESTRIAN RAILING LAYOUT – 3	604	BM12	SPAN LOCK ASSEMBLY			
535	PR04	PEDESTRIAN RAILING LAYOUT – 4	605	BM13	SPAN CONTROL MACHINERY			
536	PR05	PEDESTRIAN RAILING LAYOUT – 5	606	BE01	ONE LINE DIAGRAM			
537	PR06	PEDESTRIAN RAILING LAYOUT – 6	607	BE02	NORTH CONTROL TOWER POWER WIRING			
538	PR07	PEDESTRIAN RAILING LAYOUT – 7 & DETAILS	608	BE03	SOUTH CONTROL TOWER POWER WIRING			
539	PR08	PEDESTRIAN RAILING TABLE & DETAILS – 1	609	BE04	NORTH PIER MACHINE LEVEL POWER WIRING PLAN			
540	PR09	PEDESTRIAN RAILING TABLE & DETAILS – 2	610	BE05	SOUTH PIER MACHINE LEVEL POWER WIRING PLAN			
541	PR10	PEDESTRIAN RAILING POST CONNECTION DETAILS	611	BE06	NORTH PIER EQUIP. LEVEL AND FOOTING LEVEL POWER WIRING			
542	PR11	PEDESTRIAN RAILING HISTORIC PANEL ELEVATIONS	612	BE07	SOUTH PIER EQUIP. LEVEL AND FOOTING LEVEL POWER WIRING			
543	PR12	PEDESTRIAN RAILING HISTORIC PANEL DETAILS	613	BE08	BASCULE SPANS POWER WIRING			
544	PR13	PEDESTRIAN RAILING GEAR PANEL ELEVATIONS – 1	614	BE09	CONTROL TOWER LIGHTING PLAN			
545	PR14	PEDESTRIAN RAILING GEAR PANEL ELEVATIONS – 2	615	BE10	EQUIPMENT LEVEL LIGHTING PLAN			
546	PR15	PEDESTRIAN RAILING GEAR PANEL ELEVATIONS – 3	616	BE11	MACHINE LEVEL LIGHTING PLAN			
547	PR16	PEDESTRIAN RAILING WELD CONNECTION DETAILS – 1	617	BE12	FOOTING LEVEL LIGHTING PLAN			
548	PR17	PEDESTRIAN RAILING WELD CONNECTION DETAILS – 2	618	BE13	TRAFFIC GATE DETAILS			
549	PR18	PEDESTRIAN RAILING GEAR MOUNTING DETAILS – 1	619	BE14	RESISTANCE GATE DETAILS			
550	PR19	PEDESTRIAN RAILING GEAR MOUNTING DETAILS – 2	620	BE15	BRIDGE TRAFFIC SIGNAL DETAILS			
551	PR20	PEDESTRIAN RAILING GEAR MOUNTING SECTIONS – 1	621	BE16	NAVIGATION LIGHTING SYSTEM DETAILS			
552	PR21	PEDESTRIAN RAILING GEAR MOUNTING SECTIONS – 2	622	BE17	CROSS CHANNEL CABINET DETAILS			
553	PR22	PEDESTRIAN RAILING GEAR POST CONNECTION DETAILS – 1	623	BE18	LIMIT SWITCH DETAILS – 1			
554	PR23	PEDESTRIAN RAILING GEAR POST CONNECTION DETAILS – 2	624	BE19	LIMIT SWITCH DETAILS – 2			
555	PR24	PEDESTRIAN RAILING GEAR MOUNTING CONSTRUCTION SEQUENCE	625	BE20	BASCULE SPAN LIGHTING PLAN			
556	PR25	CONTROL TOWER RAILING LAYOUT, TABLE & DETAILS	626	BE21	ELECTRICAL DETAILS			
557	PR26	CONTROL TOWER POST CONNECTION DETAILS	627	BE22	LIGHTNING PROTECTION AND GROUNDING DETAILS			
558	AF01	ART FEATURE GENERAL PLAN AND ELEVATION	628	BE23	INTERCOM SYSTEM			
559	AF02	ART FEATURE RECLAMATION	629	BE24	CLOSED CIRCUIT TELEVISION SYSTEM			
560	AF03	ART FEATURE DRILLED SHAFT DETAILS	630	BE25	CLOSED CIRCUIT TELEVISION SYSTEM DETAILS			
561	AF04	ART FEATURE SOUTH APPROACH PLAN AND ELEVATION	631	BE26	CABLE TRAY DETAILS			
562	AF05	ART FEATURE SOUTH APPROACH FOOTING DETAILS	632	BE27	PANELBOARD AND TRANSFORMER SCHEDULES			
563	AF06	ART FEATURE SOUTH APPROACH FOOTING REINFORCEMENT	633	BE28	CONTROL CONSOLE LAYOUT			
564	AF07	ART FEATURE SOUTH APPROACH SECTION AND DETAILS	634	BE29	CONTROL CONSOLE DETAILS			
565	AF08	ART FEATURE NORTH APPROACH PLAN AND ELEVATION	635	BE30	PLC CABINET DETAILS			
566	AF09	ART FEATURE NORTH APPROACH FOOTING DETAILS	636	BE31	ELECTRICAL LEGEND SHEET			
567	AF10	ART FEATURE NORTH APPROACH FOOTING REINFORCEMENT	637	BE32	SCHEMATIC – 1			
568	AF11	ART FEATURE NORTH APPROACH SECTION AND DETAILS	638	BE33	SCHEMATIC – 2			
569	AF12	ART FEATURE LIGHTING DETAILS	639	BE34	SCHEMATIC – 3			
570	TR05	TRAFFIC BARRIER LAYOUT – SOUTH APPROACH	640	BE35	SCHEMATIC – 4			
571	TR06	TRAFFIC BARRIER LAYOUT – NORTH APPROACH	641	BE36	SCHEMATIC – 5			
572	TR07	TRAFFIC BARRIER – APPROACHES	642	BE37	SCHEMATIC – 6			
573	TR08	TRAFFIC BARRIER – RAILING DETAILS	643	BE38	SCHEMATIC – 7			
574	TR09	TRAFFIC BARRIER – SEW	644	BE39	SCHEMATIC – 8			
575	TR10	BASCULE SPAN TRAFFIC BARRIER DETAILS – 1	645	BE40	SCHEMATIC – 9			
576	TR11	BASCULE SPAN TRAFFIC BARRIER DETAILS – 2	646	BE41	SCHEMATIC – 10			
577	TR12	BASCULE SPAN TRAFFIC BARRIER DETAILS – 3	647	BE42	SCHEMATIC – 11			
578	TR13	COUNTERWEIGHT SPAN TRAFFIC BARRIER DETAILS	648	BE43	SCHEMATIC – 12			
579	PM01	PIERS 3 & 4 PLUMBING LAYOUT	649	BE44	SCHEMATIC – 13			
580	PM02	PIERS 3 & 4 PLUMBING DETAILS	650	BE45	SCHEMATIC – 14			
581	PM03	PIERS 3 & 4 HVAC SCHEDULE	651	BE46	MOTOR STARTER & SPEED CONTROL DIAGRAM			
582	PM04	PIERS 3 & 4 HVAC LAYOUT	652	BE47	SPEED TIME CURVES			
583	FP01	FIRE PROTECTION PLANS – 1	653	BE48	WIRING SCHEDULE – 1			
584	FP02	FIRE PROTECTION PLANS – 2	654	BE49	WIRING SCHEDULE – 2			
585	FP03	FIRE PROTECTION PLANS – 3	655	BE50	WIRING SCHEDULE – 3			
586	FP04	FIRE PROTECTION PLANS – 4	656	BE51	WIRING SCHEDULE – 4			

FIELD BOOK:				
SURVEYED:				
SURVEY BASE MAP:				
DESIGN ENTERED: J. RODRIGUEZ	05/2009			
DESIGNED E. DROLLINGER	05/2009			
CHECKED: J. RODRIGUEZ	01/2010			
SUPERVISOR: R. JOHNSON	01/2010	NUM. REVISION	BY	DATE

RICHARD M. JOHNSON STATE OF WASHINGTON 43017 REGISTERED PROFESSIONAL ENGINEER

HNTB

FED. AID No.

PROJECT No. 300197

SURVEY No. 32-24-4-22

MAINTENANCE DIVISION No. 3

KING COUNTY DEPT. OF TRANSPORTATION
HAROLD TANIGUCHI, DIRECTOR

SOUTH PARK BRIDGE #3179 REPLACEMENT

INDEX OF SHEETS – VOLUME 4

King County

GN07

SHEET 523 OF 667 SHEETS

316-63 (____)

INDEX OF SHEETS - ALPHANUMERIC

SHT. No.	SHEET	TITLE	SHT. No.	SHEET	TITLE	SHT. No.	SHEET	TITLE
558	AF01	ART FEATURE GENERAL PLAN AND ELEVATION	253	AS47	FASCIA TRUSS LAYOUT – SOUTH APPROACH	625	BE20	BASCULE SPAN LIGHTING PLAN
559	AF02	ART FEATURE RECLAMATION	254	AS48	FASCIA TRUSS LAYOUT – NORTH APPROACH	626	BE21	ELECTRICAL DETAILS
560	AF03	ART FEATURE DRILLED SHAFT DETAILS	255	AS49	FASCIA TRUSS ELEVATIONS	627	BE22	LIGHTNING PROTECTION AND GROUNDING DETAILS
561	AF04	ART FEATURE SOUTH APPROACH PLAN AND ELEVATION	256	AS50	FASCIA TRUSS – TYPICAL SECTION AND SPLICING DETAILS	628	BE23	INTERCOM SYSTEM
562	AF05	ART FEATURE SOUTH APPROACH FOOTING DETAILS	257	AS51	FASCIA TRUSS – TRAFFIC GATE STEEL BRACKET	629	BE24	CLOSED CIRCUIT TELEVISION SYSTEM
563	AF06	ART FEATURE SOUTH APPROACH FOOTING REINFORCEMENT	258	AS52	FASCIA TRUSS DETAILS – LATERAL BRACING – 1	630	BE25	CLOSED CIRCUIT TELEVISION SYSTEM DETAILS
564	AF07	ART FEATURE SOUTH APPROACH SECTION AND DETAILS	259	AS53	FASCIA TRUSS DETAILS – LATERAL BRACING – 2	631	BE26	CABLE TRAY DETAILS
565	AF08	ART FEATURE NORTH APPROACH PLAN AND ELEVATION	260	AS54	FASCIA TRUSS – BEARING DETAILS	632	BE27	PANELBOARD AND TRANSFORMER SCHEDULES
566	AF09	ART FEATURE NORTH APPROACH FOOTING DETAILS	261	AS55	EXPANSION JOINT DETAILS – PIERS 3 & 4	633	BE28	CONTROL CONSOLE LAYOUT
567	AF10	ART FEATURE NORTH APPROACH FOOTING REINFORCEMENT	262	AS56	JOINT SEALS AT ABUMENTS 1 & 6	634	BE29	CONTROL CONSOLE DETAILS
568	AF11	ART FEATURE NORTH APPROACH SECTION AND DETAILS	263	AS57	APPROACH SLAB DETAILS – 1	635	BE30	PLC CABINET DETAILS
569	AF12	ART FEATURE LIGHTING DETAILS	264	AS58	APPROACH SLAB DETAILS – 2	636	BE31	ELECTRICAL LEGEND SHEET
24	AL01	ALIGNMENT AND RIGHT OF WAY PLAN – 1	265	AS59	BEARING DETAILS – PIERS 3 & 4	637	BE32	SCHEMATIC – 1
25	AL02	ALIGNMENT AND RIGHT OF WAY PLAN – 2	266	AS60	BEARING DETAILS – ABUTMENTS 1 & 6	638	BE33	SCHEMATIC – 2
26	AL03	ALIGNMENT AND RIGHT OF WAY PLAN – 3	267	AS61	TRAFFIC SIGNAL POLE ANCHORAGE DETAILS	639	BE34	SCHEMATIC – 3
27	AL04	ALIGNMENT AND RIGHT OF WAY PLAN – 4	268	AS63	UTILITY ON BRIDGE – SOUTH APPROACH	640	BE35	SCHEMATIC – 4
28	AL05	ALIGNMENT AND RIGHT OF WAY PLAN – 5	269	AS64	UTILITY ON BRIDGE – NORTH APPROACH	641	BE36	SCHEMATIC – 5
29	AL06	ALIGNMENT AND RIGHT OF WAY PLAN – 6	270	AS65	UTILITY ON BRIDGE – UTILITY HANGER DETAILS – 1	642	BE37	SCHEMATIC – 6
30	AL07	ALIGNMENT AND RIGHT OF WAY PLAN – 7	271	AS66	UTILITY ON BRIDGE – UTILITY HANGER DETAILS – 2	643	BE38	SCHEMATIC – 7
31	AL08	ALIGNMENT AND RIGHT OF WAY PLAN – 8	311	BC01	BASCULE PIER CAISSON – PIERS 3 & 4 FOUNDATION LAYOUT PLAN	644	BE39	SCHEMATIC – 8
32	AL09	ALIGNMENT AND RIGHT OF WAY PLAN – 9	312	BC02	BASCULE PIER CAISSON – PIER 3 CAISSON ELEVATION – 1	645	BE40	SCHEMATIC – 9
33	AL10	SURVEY CONTROL AND MONUMENTATION	313	BC03	BASCULE PIER CAISSON – PIER 3 CAISSON ELEVATION – 2	646	BE41	SCHEMATIC – 10
666	AP01	TEMPORARY NOISE ATTENUATION PILE (TNAP)	314	BC04	BASCULE PIER CAISSON – PIER 4 CAISSON ELEVATION – 1	647	BE42	SCHEMATIC – 11
667	AP02	TNAP DETAILS	315	BC05	BASCULE PIER CAISSON – PIER 4 CAISSON ELEVATION – 2	648	BE43	SCHEMATIC – 12
207	AS01	BRIDGE LAYOUT – SOUTH APPROACH	316	BC06	BASCULE PIER CAISSON – PIERS 3 & 4 CAISSON PLAN	649	BE44	SCHEMATIC – 13
208	AS02	BRIDGE LAYOUT – NORTH APPROACH	317	BC07	BASCULE PIER CAISSON – PIERS 3 & 4 CAISSON CAP PLAN & ELEVATION	650	BE45	SCHEMATIC – 14
209	AS03	FOUNDATION PLAN – SOUTH APPROACH	318	BC08	BASCULE PIER CAISSON – PIERS 3 & 4 CUTTING EDGE REINF. ELEVATION – 1	651	BE46	MOTOR STARTER & SPEED CONTROL DIAGRAM
210	AS04	FOUNDATION PLAN – NORTH APPROACH	319	BC09	BASCULE PIER CAISSON – PIERS 3 & 4 CUTTING EDGE REINF. ELEVATION – 2	652	BE47	SPEED TIME CURVES
211	AS05	ABUTMENT 1 DRILLED SHAFT DETAILS	320	BC10	BASCULE PIER CAISSON – PIERS 3 & 4 CAISSON CUTTING EDGE REINF. SECTIONS	653	BE48	WIRING SCHEDULE – 1
212	AS06	PIER 2 DRILLED SHAFT DETAILS	321	BC11	BASCULE PIER CAISSON – PIER 3 CAISSON REINF. ELEVATIONS – 1	654	BE49	WIRING SCHEDULE – 2
213	AS07	PIER 5 DRILLED SHAFT DETAILS	322	BC12	BASCULE PIER CAISSON – PIER 3 CAISSON REINF. ELEVATIONS – 2	655	BE50	WIRING SCHEDULE – 3
214	AS08	ABUTMENT 6 DRILLED SHAFT DETAILS	323	BC13	BASCULE PIER CAISSON – PIER 3 CAISSON REINF. SECTIONS	656	BE51	WIRING SCHEDULE – 4
215	AS09	ABUTMENT 1 PLAN AND ELEVATIONS	324	BC14	BASCULE PIER CAISSON – PIER 4 CAISSON REINF. ELEVATION 1	657	BE52	WIRING SCHEDULE – 5
216	AS10	ABUTMENT 1 DETAILS	325	BC15	BASCULE PIER CAISSON – PIER 4 CAISSON REINF. ELEVATION 2	658	BE53	WIRING SCHEDULE – 6
217	AS11	ABUTMENT 1 WING WALLS	326	BC16	BASCULE PIER CAISSON – PIER 4 CAISSON REINF. SECTIONS	659	BE54	CIRCUIT SCHEDULE – 1
218	AS12	PIER 2 PLAN AND ELEVATIONS	327	BC17	BASCULE PIER CAISSON – PIERS 3 & 4 CAISSON REINF. SECTIONS	660	BE55	CIRCUIT SCHEDULE – 2
219	AS13	PIER 2 COLUMN DETAILS	328	BC18	BASCULE PIER CAISSON – PIERS 3 & 4 CAISSON CAP CONST. SEQUENCE PLAN	661	BE56	CIRCUIT SCHEDULE – 3
220	AS14	PIER 2 CROSSBEAM DETAILS – 1	329	BC19	BASCULE PIER CAISSON – PIERS 3 & 4 CAISSON WALL 1 REINF. ELEVATION	662	BE57	RACEWAY SCHEDULE 1
221	AS15	PIER 2 CROSSBEAM DETAILS – 2	330	BC20	BASCULE PIER CAISSON – PIERS 3 & 4 CAISSON WALL 2 REINF. ELEVATION	663	BE58	RACEWAY SCHEDULE 2
222	AS16	PIER 5 PLAN AND SECTION	331	BC21	BASCULE PIER CAISSON – PIERS 3 & 4 CAISSON WALL 3 REINF. ELEVATION	664	BE59	SUBMARINE CONDUIT LAYOUT – 1
223	AS17	PIER 5 ELEVATIONS	332	BC22	BASCULE PIER CAISSON – PIERS 3 & 4 CAISSON WALL 4 REINF. ELEVATION	665	BE60	SUBMARINE CONDUIT LAYOUT – 2
224	AS18	PIER 5 COLUMN DETAILS	333	BC23	BASCULE PIER CAISSON – PIERS 3 & 4 CAISSON CAP REINF. PLAN – 1	196	BG01	GENERAL PLAN AND ELEVATION
225	AS19	PIER 5 CROSSBEAM DETAILS – 1	334	BC24	BASCULE PIER CAISSON – PIERS 3 & 4 CAISSON CAP REINF. PLAN – 2	307	BG01	GENERAL PLAN AND ELEVATION
226	AS20	PIER 5 CROSSBEAM DETAILS – 2	335	BC25	BASCULE PIER CAISSON – PIERS 3 & 4 CAISSON CAP REINF. SECTION –1	528	BG01	GENERAL PLAN AND ELEVATION
227	AS21	ABUTMENT 6 PLAN AND ELEVATIONS	336	BC26	BASCULE PIER CAISSON – PIERS 3 & 4 CAISSON CAP REINF. SECTION – 2	197	BG02	GENERAL ARCH. ELEV. – WEST VIEW
228	AS22	ABUTMENT 6 DETAILS	337	BC27	BASCULE PIER CAISSON – PIERS 3 & 4 CAISSON WALLS 1 & 2 REINF. SECTIONS	308	BG02	GENERAL ARCH. ELEV. – WEST VIEW
229	AS23	ABUTMENT 6 WING WALLS	338	BC28	BASCULE PIER CAISSON – PIERS 3 & 4 CAISSON WALLS 3 & 4 REINF. SECTIONS	529	BG02	GENERAL ARCH. ELEV. – WEST VIEW
230	AS24	SOUTH APPROACH SPAN – FRAMING PLAN	339	BC29	BASCULE PIER CAISSON – PIERS 3 & 4 CAISSON CAP SUMP PIT DETAILS	198	BG03	GENERAL ARCH. ELEV. – EAST VIEW
231	AS25	NORTH APPROACH SPAN – FRAMING PLAN	340	BC30	BASCULE PIER CAISSON – PIERS 3 & 4 DREDGE WELL ACCESS DETAILS	309	BG03	GENERAL ARCH. ELEV. – EAST VIEW
232	AS26	WF74G GIRDERS AT PIERS 2 AND 5	341	BC31	BASCULE PIER CAISSON – PIERS 3 & 4 CAISSON SECTIONS & DETAILS – 1	530	BG03	GENERAL ARCH. ELEV. – EAST VIEW
233	AS27	WF74G GIRDERS AT BASCULE PIERS 3 AND 4	342	BC32	BASCULE PIER CAISSON – PIERS 3 & 4 CAISSON SECTIONS & DETAILS – 2	199	BG04	BASCULE BRIDGE PLAN AND ELEVATION
234	AS28	SOUTH APPROACH SPAN – TYPICAL SECTION AT MID SPAN	606	BE01	ONE LINE DIAGRAM	310	BG04	BASCULE BRIDGE PLAN AND ELEVATION
235	AS29	SOUTH APPROACH SPAN – TYPICAL SECTION AT PIER 2	607	BE02	NORTH CONTROL TOWER POWER WIRING	531	BG04	BASCULE BRIDGE PLAN AND ELEVATION
236	AS30	SOUTH APPROACH SPAN 1 – ROADWAY DECK	608	BE03	SOUTH CONTROL TOWER POWER WIRING	200	BG05	GENERAL NOTES – 1
237	AS31	SOUTH APPROACH SPAN 2 – ROADWAY DECK	609	BE04	NORTH PIER MACHINE LEVEL POWER WIRING PLAN	201	BG06	GENERAL NOTES – 2
238	AS32	NORTH APPROACH SPAN – TYPICAL SECTION AT MID SPAN	610	BE05	SOUTH PIER MACHINE LEVEL POWER WIRING PLAN	440	BL01	BASCULE SPAN SOUTH LEAF FRAMING PLAN
239	AS33	NORTH APPROACH SPAN – TYPICAL SECTION AT PIER 5	611	BE06	NORTH PIER EQUIP. LEVEL AND FOOTING LEVEL POWER WIRING	441	BL02	BASCULE SPAN NORTH LEAF FRAMING PLAN
240	AS34	NORTH APPROACH SPAN 4 – ROADWAY DECK	612	BE07	SOUTH PIER EQUIP. LEVEL AND FOOTING LEVEL POWER WIRING	442	BL03	BASCULE SPAN TYPICAL SECTIONS
241	AS35	NORTH APPROACH SPAN 5 – ROADWAY DECK	613	BE08	BASCULE SPANS POWER WIRING	443	BL04	BASCULE SPAN OPENING DIAGRAM
242	AS36	TRAFFIC GATE PLATFORM – PLAN AND ELEVATIONS	614	BE09	CONTROL TOWER LIGHTING PLAN	444	BL05	BASCULE SPAN BASCULE GIRDER PLAN AND ELEVATION
243	AS37	APPROACH SPAN – WF74G GIRDER DETAILS – 1	615	BE10	EQUIPMENT LEVEL LIGHTING PLAN	445	BL06	BASCULE SPAN GIRDER GEOMETRY
244	AS38	APPROACH SPAN – WF74G GIRDER DETAILS – 2	616	BE11	MACHINE LEVEL LIGHTING PLAN	446	BL07	BASCULE SPAN GIRDER CAMBER TABLES
245	AS39	APPROACH SPAN – WF74G GIRDER DETAILS – 3	617	BE12	FOOTING LEVEL LIGHTING PLAN	447	BL08	BASCULE SPAN GIRDER STIFFENER DETAILS
246	AS40	APPROACH SPAN – WF74G GIRDER DETAILS – 4	618	BE13	TRAFFIC GATE DETAILS	448	BL09	BASCULE SPAN BOLTED SPLICE DETAILS
247	AS41	APPROACH SPAN – WF74G GIRDER DETAILS – 5	619	BE14	RESISTANCE GATE DETAILS	449	BL10	BASCULE SPAN GIRDER DETAILS – 1
248	AS42	APPROACH SPAN – INTERMEDIATE DIAPHRAGM DETAILS	620	BE15	BRIDGE TRAFFIC SIGNAL DETAILS	450	BL11	BASCULE SPAN GIRDER DETAILS – 2
249	AS43	TRAFFIC GATE PLATFORM AND DIAPHRAGM DETAILS	621	BE16	NAVIGATION LIGHTING SYSTEM DETAILS	451	BL12	BASCULE SPAN FLOORBEAM ELEVATIONS – 1
250	AS44	APPROACH SPAN – END DIAPHRAGMS, ABUTMENT 1	622	BE17	CROSS CHANNEL CABINET DETAILS	452	BL12A	BASCULE SPAN FLOORBEAM ELEVATIONS – 1A
251	AS45	APPROACH SPAN – END DIAPHRAGMS, PIERS 3 & 4	623	BE18	LIMIT SWITCH DETAILS – 1	453	BL13	BASCULE SPAN FLOORBEAM ELEVATIONS – 2
252	AS46	APPROACH SPAN – END DIAPHRAGMS, ABUTMENT 6	624	BE19	LIMIT SWITCH DETAILS – 2	454	BL14	BASCULE SPAN FLOORBEAM ELEVATIONS – 3

FIELD BOOK:					
SURVEYED:					
SURVEY BASE MAP:					
DESIGN ENTERED: J. RODRIGUEZ	05/2009				
DESIGNED E. DROLLINGER	05/2009				
CHECKED: J. RODRIGUEZ	01/2010				
SUPERVISOR: R. JOHNSON	01/2010	NUM.	REVISION	BY	DATE

RICHARD M. JOHNSON STATE OF WASHINGTON 43017 REGISTERED PROFESSIONAL ENGINEER

HNTB

FED. AID No.

PROJECT No. 300197

SURVEY No. 32-24-4-22

MAINTENANCE DIVISION No. 3

KING COUNTY DEPT. OF TRANSPORTATION
HAROLD TANIGUCHI, DIRECTOR

SOUTH PARK BRIDGE #3179 REPLACEMENT

INDEX OF SHEETS
ALPHANUMERIC – 1

King County

GN08

SHEET 524 OF 667 SHEETS

316-63 (___)

INDEX OF SHEETS - ALPHANUMERIC

SHT. No.	SHEET	TITLE
455	BL15	BASCULE SPAN FLOORBEAM DETAILS – 1
456	BL16	BASCULE SPAN FLOORBEAM DETAILS – 2
457	BL17	BASCULE SPAN CANTILEVER BRACKET DETAILS – 1
458	BL18	BASCULE SPAN CANTILEVER BRACKET DETAILS – 2
459	BL19	BASCULE SPAN CANTILEVER BRACKET DETAILS – 3
460	BL20	BASCULE SPAN COUNTERWEIGHT FLOORBEAM FB0 ELEVATION
461	BL21	BASCULE SPAN COUNTERWEIGHT FLOORBEAM FB1 ELEVATION
462	BL22	BASCULE SPAN COUNTERWEIGHT FLOORBEAM FB2 ELEVATION
463	BL23	BASCULE SPAN COUNTERWEIGHT FLOORBEAM DETAILS
464	BL24	BASCULE SPAN COUNTERWEIGHT SECTIONS AND DETAILS
465	BL25	BASCULE SPAN COUNTERWEIGHT FORM PLATE PLAN
466	BL26	BASCULE SPAN COUNTERWEIGHT POCKET DETAILS
467	BL27	BASCULE SPAN COUNTERWEIGHT UPPER BRACING PLAN
468	BL28	BASCULE SPAN COUNTERWEIGHT DETAILS – 1
469	BL29	BASCULE SPAN COUNTERWEIGHT DETAILS – 2
470	BL30	BASCULE SPAN COUNTERWEIGHT DETAILS – 3
471	BL31	BASCULE SPAN COUNTERWEIGHT DETAILS – 4
472	BL32	BASCULE SPAN BALANCE TABLES
473	BL33	BASCULE SPAN BRACING DETAILS – 1
474	BL34	BASCULE SPAN BRACING DETAILS – 2
475	BL35	BASCULE SPAN BRACING DETAILS – 3
476	BL36	BASCULE SPAN BRACING DETAILS – 4
477	BL37	BASCULE SPAN BRACING DETAILS – 5
478	BL37A	BASCULE SPAN BRACING DETAILS – 5A
479	BL38	BASCULE SPAN BRACING DETAILS – 6
480	BL38A	BASCULE SPAN BRACING DETAILS – 7
481	BL39	BASCULE SPAN MISCELLANEOUS STEEL DETAILS – 1
482	BL39A	BASCULE SPAN MISCELLANEOUS STEEL DETAILS – 1A
483	BL40	BASCULE SPAN MISCELLANEOUS STEEL DETAILS – 2
484	BL41	BASCULE SPAN SIDEWALK CURB DETAILS
485	BL42	BASCULE SPAN BIRD CONTROL DETAILS
486	BL43	BASCULE SPAN JOINT DETAILS – 1
487	BL44	BASCULE SPAN JOINT DETAILS – 2
488	BL45	BASCULE SPAN JOINT DETAILS – 3
489	BL46	BASCULE SPAN JOINT DETAILS – 4
490	BL47	BASCULE SPAN JOINT DETAILS – 5
491	BL48	BASCULE SPAN JOINT DETAILS – 6
492	BL49	BASCULE SPAN JOINT DETAILS – 7
493	BL49A	BASCULE SPAN JOINT DETAILS – 7A
494	BL49B	BASCULE SPAN JOINT DETAILS – 7B
495	BL50	BASCULE SPAN MAINTENANCE WALKWAY LAYOUT
496	BL51	BASCULE SPAN MAINTENANCE WALKWAY DETAILS – 1
497	BL52	BASCULE SPAN MAINTENANCE WALKWAY DETAILS – 2
498	BL53	BASCULE SPAN MAINTENANCE WALKWAY DETAILS – 3
499	BL54	BASCULE SPAN SOUTH LEAF ROADWAY PLAN
500	BL55	BASCULE SPAN SOUTH LEAF DECK PLAN
501	BL56	BASCULE SPAN NORTH LEAF ROADWAY PLAN
502	BL57	BASCULE SPAN NORTH LEAF DECK PLAN
503	BL58	BASCULE SPAN DECK SECTIONS
504	BL59	BASCULE SPAN ROADWAY DECK DETAILS – 1
505	BL60	BASCULE SPAN ROADWAY DECK DETAILS – 2
506	BL61	BASCULE SPAN SIDEWALK DETAILS
507	BL62	COUNTERWEIGHT SPAN FRAMING PLAN
508	BL63	COUNTERWEIGHT SPAN TYPICAL SECTION
509	BL64	COUNTERWEIGHT SPAN FLOORBEAM DETAILS – 1
510	BL65	COUNTERWEIGHT SPAN FLOORBEAM DETAILS – 2
511	BL66	COUNTERWEIGHT SPAN FRAMING DETAILS
512	BL67	COUNTERWEIGHT SPAN BEARING DETAILS
513	BL68	COUNTERWEIGHT SPAN JOINT DETAILS
514	BL69	COUNTERWEIGHT SPAN DECK PLAN
515	BL70	COUNTERWEIGHT SPAN DECK DETAILS – 1
516	BL71	COUNTERWEIGHT SPAN DECK DETAILS – 2
593	BM01	GENERAL MACHINERY NOTES AND INDEX OF SHEETS
594	BM02	OPERATING MACHINERY SCHEDULE
595	BM03	OPERATING MACHINERY LAYOUT
596	BM04	OPERATING MACHINERY SECTIONS – 1
597	BM05	OPERATING MACHINERY SECTIONS – 2
598	BM06	OPERATING MACHINERY DETAILS
599	BM07	OPERATING MACHINERY SUPPORTS – 1
600	BM08	OPERATING MACHINERY SUPPORTS – 2
601	BM09	RACK ASSEMBLY AND DETAILS
602	BM10	TRUNNION SHAFT ASSEMBLY AND DETAILS
603	BM11	TRUNNION BEARING ASSEMBLY AND DETAILS
604	BM12	SPAN LOCK ASSEMBLY
605	BM13	SPAN CONTROL MACHINERY
343	BP01	BASCULE PIER – PIERS 3 & 4 WALL 1 ELEVATION
344	BP02	BASCULE PIER – PIERS 3 & 4 WALL 2 ELEVATION
345	BP03	BASCULE PIER – PIERS 3 & 4 WALL 3 ELEVATION
346	BP04	BASCULE PIER – PIERS 3 & 4 WALL 4 ELEVATION
347	BP05	BASCULE PIER – PIERS 3 & 4 LONGITUDINAL SECTION E
348	BP06	BASCULE PIER – PIERS 3 & 4 LONGITUDINAL SECTION F
349	BP07	BASCULE PIER – PIERS 3 & 4 TRANSVERSE SECTION A
350	BP08	BASCULE PIER – PIERS 3 & 4 TRANSVERSE SECTION B
351	BP09	BASCULE PIER – PIERS 3 & 4 – FOOTING LEVEL PLAN
352	BP10	BASCULE PIER – PIERS 3 & 4 – MACHINE LEVEL PLAN
353	BP11	BASCULE PIER – PIERS 3 & 4 – EQUIPMENT LEVEL PLAN
354	BP12	BASCULE PIER – PIERS 3 & 4 – ROADWAY LEVEL PLAN
355	BP13	BASCULE PIER – PIERS 3 & 4 MACHINE LEVEL REINF. PLAN AND SECTION
356	BP14	BASCULE PIER – PIERS 3 & 4 MACHINE LEVEL REINF. SECTIONS – 1
357	BP15	BASCULE PIER – PIERS 3 & 4 MACHINE LEVEL REINF. SECTIONS – 2
358	BP16	BASCULE PIER – PIERS 3 & 4 EQUIPMENT LEVEL REINF. PLAN AND SECTION
359	BP17	BASCULE PIER – PIERS 3 & 4 EQUIPMENT LEVEL REINF. SECTIONS – 1
360	BP18	BASCULE PIER – PIERS 3 & 4 EQUIPMENT LEVEL REINF. SECTIONS – 2
361	BP19	BASCULE PIER – PIERS 3 & 4 EQUIPMENT LEVEL REINF. SECTIONS – 3
362	BP20	BASCULE PIER – PIERS 3 & 4 ROADWAY LEVEL REINF. PLAN
363	BP21	BASCULE PIER – PIERS 3 & 4 ROADWAY LEVEL REINF. PLAN AND SECTIONS
364	BP22	BASCULE PIER – PIERS 3 & 4 ROADWAY LEVEL REINF. SECTIONS – 1
365	BP23	BASCULE PIER – PIERS 3 & 4 ROADWAY LEVEL REINF. SECTIONS – 2
366	BP24	BASCULE PIER – PIERS 3 & 4 ROADWAY LEVEL REINF. SECTIONS – 3
367	BP25	BASCULE PIER – PIERS 3 & 4 ROADWAY LEVEL REINF. SECTIONS – 4
368	BP26	BASCULE PIER – PIERS 3 & 4 ROADWAY LEVEL REINF. SECTIONS – 5
369	BP27	BASCULE PIER – PIERS 3 & 4 WALL 1 REINF. ELEVATION
370	BP28	BASCULE PIER – PIERS 3 & 4 WALL 1 REINF. SECTIONS – 1
371	BP29	BASCULE PIER – PIERS 3 & 4 WALL 1 REINF. SECTIONS – 2
372	BP30	BASCULE PIER – PIERS 3 & 4 WALL 2 REINF. ELEVATION
373	BP31	BASCULE PIER – PIERS 3 & 4 WALL 2 REINF. SECTIONS – 1
374	BP32	BASCULE PIER – PIERS 3 & 4 WALL 2 REINF. SECTIONS – 2
375	BP33	BASCULE PIER – PIERS 3 & 4 WALL 3 REINF. ELEVATION
376	BP34	BASCULE PIER – PIERS 3 & 4 WALL 3 REINF. SECTIONS – 1
377	BP35	BASCULE PIER – PIERS 3 & 4 WALL 3 REINF. SECTIONS – 2
378	BP36	BASCULE PIER – PIERS 3 & 4 WALL 4 REINF. ELEVATION
379	BP37	BASCULE PIER – PIERS 3 & 4 WALL 4 REINF. SECTIONS – 1
380	BP38	BASCULE PIER – PIERS 3 & 4 WALL 4 REINF. SECTIONS – 2
381	BP39	BASCULE PIER – PIERS 3 & 4 WALL 5 & 6 REINF. ELEVATION
382	BP40	BASCULE PIER – PIERS 3 & 4 WALL 5 & 6 REINF. SECTIONS – 1
383	BP41	BASCULE PIER – PIERS 3 & 4 WALL 5 & 6 REINF. SECTIONS – 2
384	BP42	BASCULE PIER – PIERS 3 & 4 ROADWAY LEVEL ACCESS HATCH
385	BP43	BASCULE PIER – PIERS 3 & 4 STAIR DETAILS
386	BP44	BASCULE PIER – PIERS 3 & 4 STAIR LANDING DETAILS
387	BP45	BASCULE PIER – PIERS 3 & 4 WALKWAY TO PIER PROTECTION
82	CA01	POTENTIAL CONTAMINATION AREA – 1
83	CA02	POTENTIAL CONTAMINATION AREA – 2
152	CH01	CHANNELIZATION PLAN – 1
153	CH02	CHANNELIZATION PLAN – 2
154	CH03	CHANNELIZATION PLAN – 3
155	CH04	CHANNELIZATION PLAN – 4
156	CH05	CHANNELIZATION PLAN – 5
157	CH06	CHANNELIZATION PLAN – 6
279	CS15	CONSTRUCTION / DEMOLITION SEQUENCE – 1
280	CS17	CONSTRUCTION / DEMOLITION SEQUENCE – 2
281	CS18	CONSTRUCTION / DEMOLITION SEQUENCE – 3
282	CS19	CONSTRUCTION / DEMOLITION SEQUENCE – 4
283	CS20	CONSTRUCTION / DEMOLITION SEQUENCE – 5
284	CS21	CONSTRUCTION / DEMOLITION SEQUENCE – 6
285	CS22	BASCULE PIER CONSTRUCTION SEQUENCE – 1
286	CS23	BASCULE PIER CONSTRUCTION SEQUENCE – 2
287	CS24	BASCULE PIER CONSTRUCTION SEQUENCE – 3
288	CS25	BASCULE PIER CONSTRUCTION SEQUENCE – 4
289	CS27	SUGGESTED CONSTRUCTION SEQUENCE
388	CT01	CONTROL TOWER PIERS 3 & 4 ARCHITECTUAL GENERAL NOTES
389	CT02	CONTROL TOWER PIERS 3 & 4 WALL ELEVATIONS 7 & 9
390	CT03	CONTROL TOWER PIERS 3 & 4 WALL ELEVATIONS 8 & 10
391	CT04	CONTROL TOWER PIERS 3 & 4 EQUIPMENT LEVEL FLOOR PLAN
392	CT05	CONTROL TOWER PIERS 3 & 4 ROADWAY LEVEL FLOOR PLAN
393	CT06	CONTROL TOWER PIERS 3 & 4 OPERATOR LEVEL FLOOR & CEILING PLAN
394	CT07	CONTROL TOWER PIERS 3 & 4 ROOF PLAN & DETAILS
395	CT08	CONTROL TOWER PIERS 3 & 4 LONGITUDINAL SECTION A & B
396	CT09	CONTROL TOWER PIERS 3 & 4 TRANSVERSE SECTION C
397	CT10	CONTROL TOWER PIERS 3 & 4 ARCHITECTURAL WALL SECTIONS
398	CT11	CONTROL TOWER PIERS 3 & 4 ARCHITECTURAL DETAILS – 1
399	CT12	CONTROL TOWER PIERS 3 & 4 ARCHITECTURAL DETAILS – 2
400	CT13	CONTROL TOWER PIERS 3 & 4 ARCHITECTURAL DETAILS – 3
401	CT14	CONTROL TOWER PIERS 3 & 4 ARCHITECTURAL DETAILS – 4
402	CT15	CONTROL TOWER PIERS 3 & 4 ARCHITECTURAL DETAILS – 5
403	CT16	CONTROL TOWER PIERS 3 & 4 DOOR & WINDOW SCHEDULE
404	CT17	CONTROL TOWER PIERS 3 & 4 OPERATOR LEVEL STRUCTURE PLAN
405	CT18	CONTROL TOWER PIERS 3 & 4 OPERATOR LEVEL REINF. PLAN
406	CT19	CONTROL TOWER PIERS 3 & 4 OPERATOR LEVEL REINF. SECTIONS – 1
407	CT20	CONTROL TOWER PIERS 3 & 4 OPERATOR LEVEL ROOF FRAMING PLAN
408	CT21	CONTROL TOWER PIERS 3 & 4 OPERATOR LEVEL DETAILS – 1
409	CT22	CONTROL TOWER PIERS 3 & 4 OPERATOR LEVEL DETAILS – 2
410	CT23	CONTROL TOWER PIERS 3 & 4 OPERATOR LEVEL DETAILS – 3
411	CT24	CONTROL TOWER PIERS 3 & 4 OPERATOR LEVEL DETAILS – 4
412	CT25	CONTROL TOWER PIERS 3 & 4 WALLS 8 & 9 REINFORCEMENT
413	CT26	CONTROL TOWER PIERS 3 & 4 WALLS 7 & 10 REINFORCEMENT
414	CT27	CONTROL TOWER PIERS 3 & 4 WALL SECTIONS – 1
415	CT28	CONTROL TOWER PIERS 3 & 4 WALL SECTIONS – 2
416	CT29	CONTROL TOWER PIERS 3 & 4 WALL SECTIONS – 3
114	DD01	DRAINAGE DETAILS – 1
115	DD02	DRAINAGE DETAILS – 2
116	DD03	DRAINAGE DETAILS – 3
117	DD04	DRAINAGE DETAILS – 4
118	DD05	DRAINAGE DETAILS – 5
119	DD06	DRAINAGE DETAILS – 6
120	DD07	DRAINAGE DETAILS – 7
121	DD08	DRAINAGE DETAILS – 8
122	DD09	DRAINAGE DETAILS – 9
123	DD10	DRAINAGE DETAILS – 10
124	DD11	DRAINAGE DETAILS – 11
290	DM02	BASCULE SPAN REMOVAL
291	DM03	EXISTING APPROACH REMOVAL
292	DM04	SALVAGE PLAN OF EXISTING – 1
293	DM05	SALVAGE PLAN OF EXISTING – 2
294	DM06	SALVAGE PLAN OF EXISTING – 3
295	DM07	SALVAGE PLAN OF EXISTING – 4
90	DN01	DRAINAGE STRUCTURE NOTES – 1
91	DN02	DRAINAGE STRUCTURE NOTES – 2
92	DN03	DRAINAGE STRUCTURE NOTES – 3
93	DN04	DRAINAGE STRUCTURE NOTES – 4
94	DN05	DRAINAGE STRUCTURE NOTES – 5
95	DN06	DRAINAGE STRUCTURE NOTES – 6
96	DN07	DRAINAGE STRUCTURE NOTES – 7
97	DN08	DRAINAGE STRUCTURE NOTES – 8
98	DN09	DRAINAGE STRUCTURE NOTES – 9
105	DP01	DRAINAGE PROFILE – 1
106	DP02	DRAINAGE PROFILE – 2
107	DP03	DRAINAGE PROFILE – 3
108	DP04	DRAINAGE PROFILE – 4
109	DP05	DRAINAGE PROFILE – 5
110	DP06	DRAINAGE PROFILE – 6
111	DP07	DRAINAGE PROFILE – 7
112	DP08	DRAINAGE PROFILE – 8
113	DP09	DRAINAGE PROFILE – 9
99	DR01	DRAINAGE PLAN – 1
100	DR02	DRAINAGE PLAN – 2
101	DR03	DRAINAGE PLAN – 3
102	DR04	DRAINAGE PLAN – 4
103	DR05	DRAINAGE PLAN – 5
104	DR06	DRAINAGE PLAN – 6
43	EC01	EROSION CONTROL PLAN – GENERAL – 1

FIELD BOOK:					
SURVEYED:					
SURVEY BASE MAP:					
DESIGN ENTERED: J. RODRIGUEZ	05/2009				
DESIGNED E. DROLLINGER	05/2009				
CHECKED: J. RODRIGUEZ	01/2010				
SUPERVISOR: R. JOHNSON	01/2010	NUM.	REVISION	BY	DATE

RICHARD M. JOHNSON — STATE OF WASHINGTON — 43017 — REGISTERED PROFESSIONAL ENGINEER

HNTB

FED. AID No.

PROJECT No. 300197

SURVEY No. 32-24-4-22

MAINTENANCE DIVISION No. 3

KING COUNTY DEPT. OF TRANSPORTATION
HAROLD TANIGUCHI, DIRECTOR

SOUTH PARK BRIDGE #3179 REPLACEMENT

INDEX OF SHEETS
ALPHANUMERIC – 2

King County

GN09

SHEET 525 OF 667 SHEETS

316-63 (___)

INDEX OF SHEETS - ALPHANUMERIC

SHT. No.	SHEET	TITLE
44	EC02	EROSION CONTROL PLAN – GENERAL – 2
45	EC03	EROSION CONTROL PLAN – GENERAL – 3
46	EC04	EROSION CONTROL PLAN – PHASE 1 – 1
47	EC05	EROSION CONTROL PLAN – PHASE 1 – 2
48	EC06	EROSION CONTROL PLAN – PHASE 1 – 3
49	EC07	EROSION CONTROL PLAN – PHASE 2 – 1
50	EC08	EROSION CONTROL PLAN – PHASE 2 – 2
51	EC09	EROSION CONTROL PLAN – PHASE 2 – 3
52	ED01	EROSION CONTROL DETAILS – 1
53	ED02	EROSION CONTROL DETAILS – 2
54	ED03	EROSION CONTROL DETAILS – 3
42	EN01	EROSION CONTROL STRUCTURE NOTES – 1
583	FP01	FIRE PROTECTION PLANS – 1
584	FP02	FIRE PROTECTION PLANS – 2
585	FP03	FIRE PROTECTION PLANS – 3
586	FP04	FIRE PROTECTION PLANS – 4
587	FP05	FIRE PROTECTION PLANS – 5
588	FP06	PIERS 3 & 4 FIRE PROTECTION EQUIPMENT LEVEL PLAN
589	FP07	FIRE PROTECTION – SECTIONS
590	FP08	FIRE PROTECTION – HEAT TRACE DIAGRAM
591	FP09	FIRE PROTECTION DETAILS – 1
592	FP10	FIRE PROTECTION DETAILS – 2
1	GN01	TITLE SHEET
185	GN01	TITLE SHEET
296	GN01	TITLE SHEET
517	GN01	TITLE SHEET
2	GN02	VICINITY MAP / KEY MAP
186	GN02	VICINITY MAP / KEY MAP
297	GN02	VICINITY MAP / KEY MAP
518	GN02	VICINITY MAP / KEY MAP
3	GN03	LEGEND AND ABBREVIATIONS
187	GN03	LEGEND AND ABBREVIATIONS
298	GN03	LEGEND AND ABBREVIATIONS
519	GN03	LEGEND AND ABBREVIATIONS
4	GN04	INDEX OF SHEETS – VOLUME 1
188	GN04	INDEX OF SHEETS – VOLUME 1
299	GN04	INDEX OF SHEETS – VOLUME 1
520	GN04	INDEX OF SHEETS – VOLUME 1
5	GN05	INDEX OF SHEETS – VOLUME 2
189	GN05	INDEX OF SHEETS – VOLUME 2
300	GN05	INDEX OF SHEETS – VOLUME 2
521	GN05	INDEX OF SHEETS – VOLUME 2
6	GN06	INDEX OF SHEETS – VOLUME 3
190	GN06	INDEX OF SHEETS – VOLUME 3
301	GN06	INDEX OF SHEETS – VOLUME 3
522	GN06	INDEX OF SHEETS – VOLUME 3
7	GN07	INDEX OF SHEETS – VOLUME 4
191	GN07	INDEX OF SHEETS – VOLUME 4
302	GN07	INDEX OF SHEETS – VOLUME 4
523	GN07	INDEX OF SHEETS – VOLUME 4
8	GN08	INDEX OF SHEETS ALPHANUMERIC – 1
192	GN08	INDEX OF SHEETS ALPHANUMERIC – 1
303	GN08	INDEX OF SHEETS ALPHANUMERIC – 1
524	GN08	INDEX OF SHEETS ALPHANUMERIC – 1
9	GN09	INDEX OF SHEETS ALPHANUMERIC – 2
193	GN09	INDEX OF SHEETS ALPHANUMERIC – 2
304	GN09	INDEX OF SHEETS ALPHANUMERIC – 2
525	GN09	INDEX OF SHEETS ALPHANUMERIC – 2
10	GN10	INDEX OF SHEETS ALPHANUMERIC – 3
194	GN10	INDEX OF SHEETS ALPHANUMERIC – 3
305	GN10	INDEX OF SHEETS ALPHANUMERIC – 3
526	GN10	INDEX OF SHEETS ALPHANUMERIC – 3
11	GN11	INDEX OF SHEETS ALPHANUMERIC – 4
195	GN11	INDEX OF SHEETS ALPHANUMERIC – 4
306	GN11	INDEX OF SHEETS ALPHANUMERIC – 4
527	GN11	INDEX OF SHEETS ALPHANUMERIC – 4
84	GR01	GRADING PLAN – 1
85	GR02	GRADING PLAN – 2
86	GR03	GRADING PLAN – 3
87	GR04	GRADING PLAN – 4
88	GR05	GRADING PLAN – 5
89	GR06	GRADING PLAN – 6
125	IL01	ILLUMINATION PLAN – 1
126	IL02	ILLUMINATION PLAN – 2
127	IL03	ILLUMINATION PLAN – 3
128	IL04	ILLUMINATION PLAN – 4
129	IL05	ILLUMINATION PLAN – 5
130	IL06	ILLUMINATION POLE FOUNDATIONS – 1
131	IL07	ILLUMINATION POLE FOUNDATIONS – 2
132	IL08	ILLUMINATION ENLARGED PLANS AND SECTIONS – 1
133	IL09	ILLUMINATION ENLARGED PLANS AND SECTIONS – 2
134	IL10	ILLUMINATION DETAILS
135	IL11	ILLUMINATION PANEL SCHEDULES AND LOAD CALCULATIONS
136	IL12	ILLUMINATION CONDUIT AND WIRE SCHEDULE
174	LM01	SOUTH SHORELINE RESTORATION PLANTING PLAN
175	LM02	SOUTH SHORELINE RESTORATION PLANTING DETAILS AND SCHEDULE
176	LM03	SOUTH SHORELINE RESTORATION SECTION PROFILES
177	LM04	NORTH SHORELINE RESTORATION PLANTING PLAN AND DETAIL
158	LS01	ARCHITECTURAL LAYOUT PLAN – 1
159	LS02	ARCHITECTURAL LAYOUT PLAN – 2
160	LS03	PEDESTRIAN LANDING PLANS
161	LS04	PEDESTRIAN LANDING FRAMING PLANS
162	LS05	PEDESTRIAN LANDING STRUCTURAL DETAILS – 1
163	LS06	PEDESTRIAN LANDING STRUCTURAL DETAILS – 2
164	LS07	PEDESTRIAN LANDING RAILING DETAILS
165	LS08	GEAR BOX ASSEMBLY DETAILS
166	LS09	BRICK PAVING DETAILS
167	LS10	INTERPRETIVE SIGN/BOLLARD DETAILS
168	LS11	BALUSTRADE/LIGHT DETAILS
169	LS12	PLANTING LAYOUT PLAN – 1
170	LS13	PLANTING LAYOUT PLAN – 2
171	LS14	PLANTING LAYOUT PLAN – 3
172	LS15	PLANTING AND BOULDER SCHEDULE
173	LS16	PLANTING DETAILS
579	PM01	PIERS 3 & 4 PLUMBING LAYOUT
580	PM02	PIERS 3 & 4 PLUMBING DETAILS
581	PM03	PIERS 3 & 4 HVAC SCHEDULE
582	PM04	PIERS 3 & 4 HVAC LAYOUT
272	PP01	BASCULE PIER FENDER SYSTEM LAYOUT PLAN
273	PP02	BASCULE PIER FENDER SYSTEM GENERAL NOTES AND BILL OF MATERIALS
274	PP03	BASCULE PIER FENDER SYSTEM PARTIAL PLAN & ELEVATION VIEW
275	PP04	BASCULE PIER FENDER SYSTEM DETAILS – 1
276	PP05	BASCULE PIER FENDER SYSTEM DETAILS – 2
277	PP06	BASCULE PIER FENDER SYSTEM DETAILS – 3
278	PP07	BASCULE PIER FENDER SYSTEM DETAILS – 4
532	PR01	PEDESTRIAN RAILING LAYOUT – 1
533	PR02	PEDESTRIAN RAILING LAYOUT – 2
534	PR03	PEDESTRIAN RAILING LAYOUT – 3
535	PR04	PEDESTRIAN RAILING LAYOUT – 4
536	PR05	PEDESTRIAN RAILING LAYOUT – 5
537	PR06	PEDESTRIAN RAILING LAYOUT – 6
538	PR07	PEDESTRIAN RAILING LAYOUT – 7 & DETAILS
539	PR08	PEDESTRIAN RAILING TABLE & DETAILS – 1
540	PR09	PEDESTRIAN RAILING TABLE & DETAILS – 2
541	PR10	PEDESTRIAN RAILING POST CONNECTION DETAILS
542	PR11	PEDESTRIAN RAILING HISTORIC PANEL ELEVATIONS
543	PR12	PEDESTRIAN RAILING HISTORIC PANEL DETAILS
544	PR13	PEDESTRIAN RAILING GEAR PANEL ELEVATIONS – 1
545	PR14	PEDESTRIAN RAILING GEAR PANEL ELEVATIONS – 2
546	PR15	PEDESTRIAN RAILING GEAR PANEL ELEVATIONS – 3
547	PR16	PEDESTRIAN RAILING WELD CONNECTION DETAILS – 1
548	PR17	PEDESTRIAN RAILING WELD CONNECTION DETAILS – 2
549	PR18	PEDESTRIAN RAILING GEAR MOUNTING DETAILS – 1
550	PR19	PEDESTRIAN RAILING GEAR MOUNTING DETAILS – 2
551	PR20	PEDESTRIAN RAILING GEAR MOUNTING SECTIONS – 1
552	PR21	PEDESTRIAN RAILING GEAR MOUNTING SECTIONS – 2
553	PR22	PEDESTRIAN RAILING GEAR POST CONNECTION DETAILS – 1
554	PR23	PEDESTRIAN RAILING GEAR POST CONNECTION DETAILS – 2
555	PR24	PEDESTRIAN RAILING GEAR MOUNTING CONSTRUCTION SEQUENCE
556	PR25	CONTROL TOWER RAILING LAYOUT, TABLE & DETAILS
557	PR26	CONTROL TOWER POST CONNECTION DETAILS
55	RD01	ROADWAY PLAN AND PROFILE – 1
56	RD02	ROADWAY PLAN AND PROFILE – 2
57	RD03	ROADWAY PLAN AND PROFILE – 3
58	RD04	ROADWAY PLAN AND PROFILE – 4
59	RD05	ROADWAY PLAN AND PROFILE – 5
60	RD06	ROADWAY PLAN AND PROFILE – 6
61	RD07	ROADWAY PLAN AND PROFILE – 7
62	RD08	ROADWAY PLAN AND PROFILE – 8
63	RD09	ROADWAY PLAN AND PROFILE – 9
64	RD10	ROADWAY DETAILS – 1
65	RD11	ROADWAY DETAILS – 2
66	RD12	ROADWAY DETAILS – 3
67	RD13	ROADWAY DETAILS – 4
68	RD14	ROADWAY DETAILS – 5
69	RD15	ROADWAY DETAILS – 6
19	RS01	TYPICAL ROADWAY SECTIONS – 1
20	RS02	TYPICAL ROADWAY SECTIONS – 2
21	RS03	TYPICAL ROADWAY SECTIONS – 3
22	RS04	TYPICAL ROADWAY SECTIONS – 4
23	RS05	TYPICAL ROADWAY SECTIONS – 5
73	RW01	RETAINING WALL LAYOUT – SOUTH APPROACH
74	RW02	RETAINING WALL ELEVATIONS – SOUTH APPROACH
75	RW03	RETAINING WALL LAYOUT – NORTH APPROACH
76	RW04	RETAINING WALL ELEVATIONS – NORTH APPROACH
77	RW05	RETAINING WALL SECTIONS
78	RW06	STRUCTURAL EARTH WALL
79	RW07	STRUCTURAL EARTH WALL – FACING PANEL DETAILS
80	RW08	STRUCTURAL EARTH WALL – UTILITIES
81	RW09	STRUCTURAL EARTH WALL – UTILITY DETAILS
34	SA01	STAGING AREAS AND CONSTRUCTION LIMITS
202	SB01	SOIL BORINGS – 1
203	SB02	SOIL BORINGS – 2
204	SB03	SOIL BORINGS – 3
205	SB04	SOIL BORINGS – 4
206	SB05	SOIL BORINGS – 5
70	SF01	FENCING PLAN – 1
71	SF02	FENCING PLAN – 2
72	SF03	FENCING DETAILS
35	SP01	SITE PREPARATION PLAN – 1
36	SP02	SITE PREPARATION PLAN – 2
37	SP03	SITE PREPARATION PLAN – 3
38	SP04	SITE PREPARATION PLAN – 4
39	SP05	SITE PREPARATION PLAN – 5
40	SP06	SITE PREPARATION PLAN – 6
41	SP07	SITE PREPARATION DETAILS
12	SQ01	SUMMARY OF QUANTITIES – 1
13	SQ02	SUMMARY OF QUANTITIES – 2
14	SQ03	SUMMARY OF QUANTITIES – 3
15	SQ04	SUMMARY OF QUANTITIES – 4
16	SQ05	SUMMARY OF QUANTITIES – 5
17	SQ06	SUMMARY OF QUANTITIES – 6
18	SQ07	SUMMARY OF QUANTITIES – 7
178	TC01	TEMPORARY TRAFFIC CONTROL – SOUTH – STAGE 1
179	TC02	TEMPORARY TRAFFIC CONTROL – SOUTH – STAGE 2
180	TC03	TEMPORARY TRAFFIC CONTROL – NORTH
181	TC04	TEMPORARY SIGNAL REVISION STAGE 1
182	TC05	TEMPORARY SIGNAL REVISION STAGE 2
183	TC06	TEMPORARY SIGNAL REVISION FINAL STAGE
184	TC07	TEMPORARY TRAFFIC CONTROL DETAILS
417	TF01	TRUNNION FRAME ELEVATION VIEW 1
418	TF02	TRUNNION FRAME ELEVATION VIEW 2
419	TF03	TRUNNION FRAME ELEVATION VIEWS 3 & 4
420	TF04	TRUNNION FRAME DETAILS – 1
421	TF04A	TRUNNION FRAME DETAILS – 1A
422	TF05	TRUNNION FRAME DETAILS – 2
423	TF06	TRUNNION FRAME DETAILS – 3
424	TF07	TRUNNION FRAME DETAILS – 4
425	TF08	TRUNNION FRAME DETAILS – 5
426	TF09	TRUNNION FRAME DETAILS – 6

FIELD BOOK:					
SURVEYED:					
SURVEY BASE MAP:					
DESIGN ENTERED: J. RODRIGUEZ	05/2009				
DESIGNED E. DROLLINGER	05/2009				
CHECKED: J. RODRIGUEZ	01/2010				
SUPERVISOR: R. JOHNSON	01/2010	NUM.	REVISION	BY	DATE

RICHARD M. JOHNSON STATE OF WASHINGTON 43017 REGISTERED PROFESSIONAL ENGINEER

HNTB

FED. AID No.

PROJECT No. 300197

SURVEY No. 32-24-4-22

MAINTENANCE DIVISION No. 3

KING COUNTY DEPT. OF TRANSPORTATION
HAROLD TANIGUCHI, DIRECTOR

SOUTH PARK BRIDGE #3179 REPLACEMENT

INDEX OF SHEETS
ALPHANUMERIC – 3

King County

GN10

SHEET 526 OF 667 SHEETS

316-63 (___)

INDEX OF SHEETS - ALPHANUMERIC

SHT. No.	SHEET	TITLE	SHT. No.	SHEET	TITLE	SHT. No.	SHEET	TITLE
427	TF10	TRUNNION FRAME LIVE LOAD SHOE BRACKET DETAILS						
428	TF11	TRUNNION FRAME HOLD DOWN DEVICE DETAILS						
429	TF11A	TRUNNION FRAME MACHINE SLAB – 1						
430	TF11B	TRUNNION FRAME MACHINE SLAB – 2						
431	TF11C	TRUNNION FRAME BUMPER BLOCK DETAILS						
432	TF12	TRUNNION FRAME MAINTENANCE PLATFORM PLAN – 1						
433	TF13	TRUNNION FRAME MAINTENANCE PLATFORM PLAN – 2						
434	TF14	TRUNNION FRAME MAINTENANCE PLATFORM PLAN – 3						
435	TF15	TRUNNION FRAME MAINTENANCE PLATFORM PLAN – 4						
436	TF16	TRUNNION FRAME MAINTENANCE PLATFORM DETAILS – 1						
437	TF17	TRUNNION FRAME MAINTENANCE PLATFORM DETAILS – 2						
438	TF18	TRUNNION FRAME MAINTENANCE PLATFORM DETAILS – 3						
439	TF19	TRUNNION FRAME PIER PROTECTION ACCESS PLAN AND DETAILS						
570	TR05	TRAFFIC BARRIER LAYOUT – SOUTH APPROACH						
571	TR06	TRAFFIC BARRIER LAYOUT – NORTH APPROACH						
572	TR07	TRAFFIC BARRIER – APPROACHES						
573	TR08	TRAFFIC BARRIER – RAILING DETAILS						
574	TR09	TRAFFIC BARRIER – SEW						
575	TR10	BASCULE SPAN TRAFFIC BARRIER DETAILS – 1						
576	TR11	BASCULE SPAN TRAFFIC BARRIER DETAILS – 2						
577	TR12	BASCULE SPAN TRAFFIC BARRIER DETAILS – 3						
578	TR13	COUNTERWEIGHT SPAN TRAFFIC BARRIER DETAILS						
137	UT01	UTILITY NOTES – 1						
138	UT02	UTILITY NOTES – 2						
139	UT03	UTILITY PLANS – 1						
140	UT04	UTILITY PLANS – 2						
141	UT05	UTILITY PLANS – 3						
142	UT06	UTILITY PLANS – 4						
143	UT07	UTILITY PLANS – 5						
144	UT08	UTILITY PLANS – 6						
145	UT09	UTILITY PROFILE – SANITARY SEWER SOUTH						
146	UT10	UTILITY PROFILE – SANITARY SEWER NORTH						
147	UT11	UTILITY PROFILE – WATERLINE SOUTH						
148	UT12	UTILITY PROFILE – WATERLINE NORTH						
149	UT13	UTILITY DETAILS – 1						
150	UT14	UTILITY DETAILS – 2						
151	UT15	UTILITY DETAILS – 3						

FIELD BOOK: _____
SURVEYED: _____
SURVEY BASE MAP: _____
DESIGN ENTERED: J. RODRIGUEZ 05/2009
DESIGNED E. DROLLINGER 05/2009
CHECKED: J. RODRIGUEZ 01/2010
SUPERVISOR: R. JOHNSON 01/2010

NUM.	REVISION	BY	DATE

RICHARD M. JOHNSON STATE OF WASHINGTON 43017 REGISTERED PROFESSIONAL ENGINEER

HNTB

FED. AID No. _____
PROJECT No. 300197
SURVEY No. 32-24-4-22
MAINTENANCE DIVISION No. 3

KING COUNTY DEPT. OF TRANSPORTATION
HAROLD TANIGUCHI, DIRECTOR
SOUTH PARK BRIDGE #3179 REPLACEMENT
INDEX OF SHEETS
ALPHANUMERIC – 4

King County

GN11

SHEET 527 OF 667 SHEETS

316-63 (____)

SEC. 32, T.24N, R.4 E W.M.

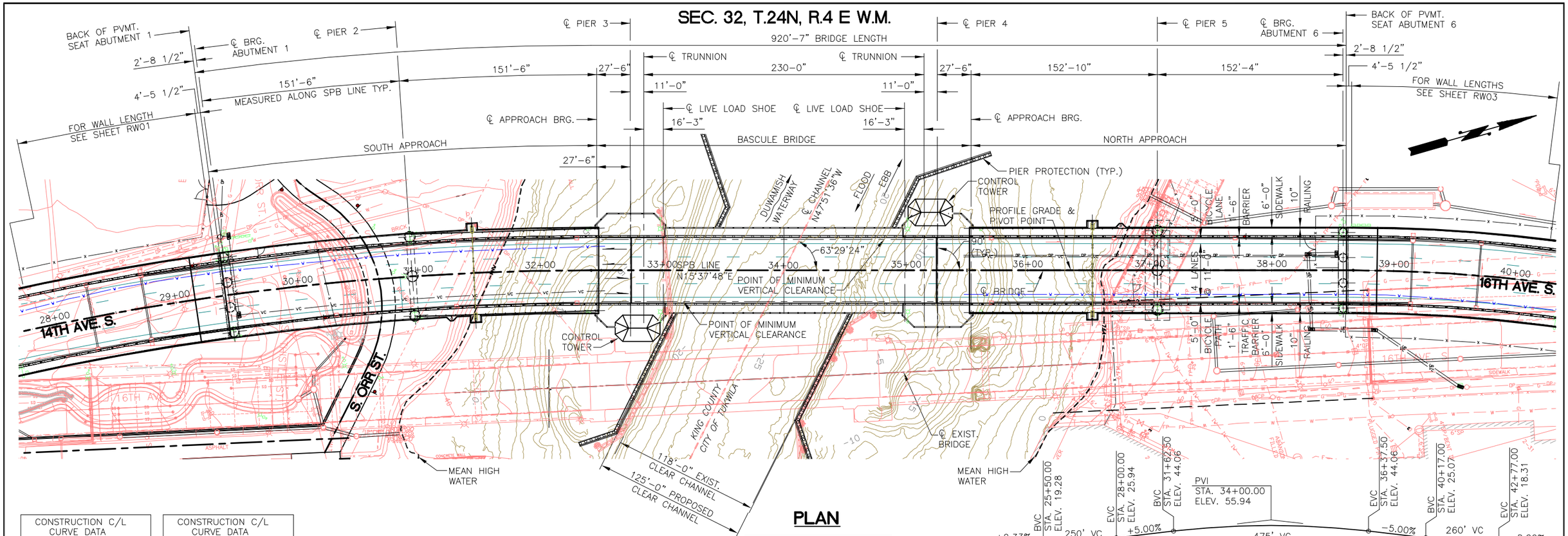

PLAN

40 20 0 40 80
SCALE IN FEET

CONSTRUCTION C/L CURVE DATA	
△	13°51'51"
R	2200.00'
T	267.48'
L	532.35'
PI	SPB LINE 29+76.83

CONSTRUCTION C/L CURVE DATA	
△	7°22'12"
R	1250'
T	80.51'
L	160.79'
PI	SPB LINE 39+47.43

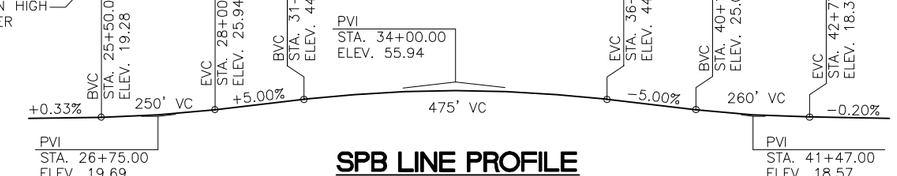

SPB LINE PROFILE

N.T.S.

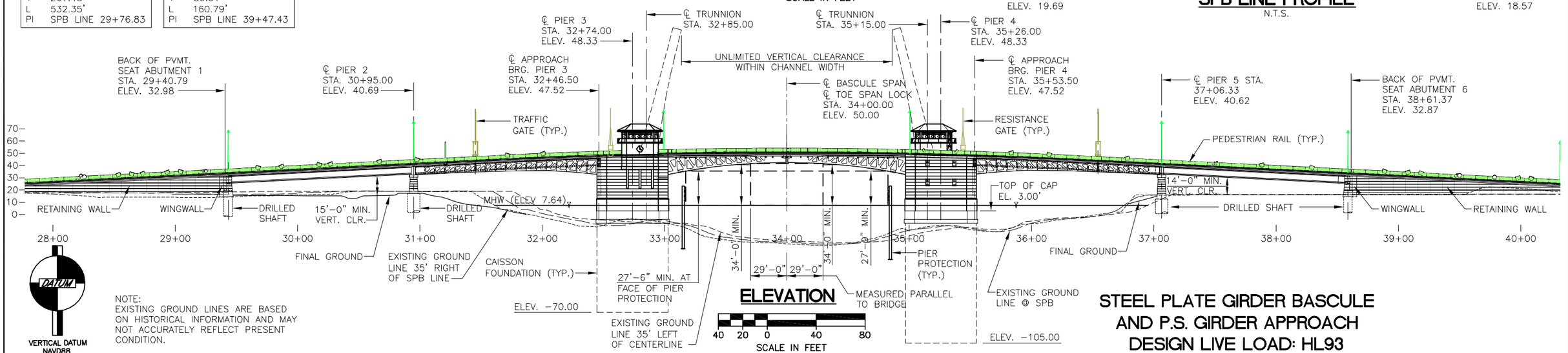

ELEVATION

40 20 0 40 80
SCALE IN FEET

DATUM

VERTICAL DATUM NAVD88

NOTE:
EXISTING GROUND LINES ARE BASED ON HISTORICAL INFORMATION AND MAY NOT ACCURATELY REFLECT PRESENT CONDITION.

STEEL PLATE GIRDER BASCULE AND P.S. GIRDER APPROACH DESIGN LIVE LOAD: HL93

FIELD BOOK:			
SURVEYED:			
SURVEY BASE MAP:			
DESIGN ENTERED:	D. NORMAN	06/2009	
DESIGNED	G. HARRELL	06/2009	
CHECKED:	G. DORN	12/2009	
SUPERVISOR:	R. JOHNSON	01/2010	

NUM.	REVISION	BY	DATE

GERALD L. DORN STATE OF WASHINGTON 36649 STRUCTURAL ENGINEER PROFESSIONAL ENGINEER

HNTB

FED. AID No. _____

PROJECT No. 300197

SURVEY No. 32-24-4-22

MAINTENANCE DIVISION No. 3

KING COUNTY DEPT. OF TRANSPORTATION
HAROLD TANIGUCHI, DIRECTOR

SOUTH PARK BRIDGE #3179 REPLACEMENT

GENERAL PLAN AND ELEVATION

King County

BG01

SHEET 528 OF 667 SHEETS

316-63 (____)

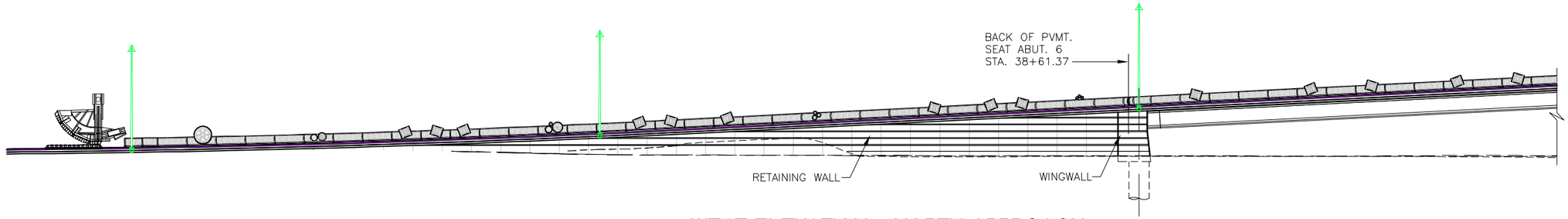

WEST ELEVATION - NORTH APPROACH

20 10 0 20 40
SCALE IN FEET

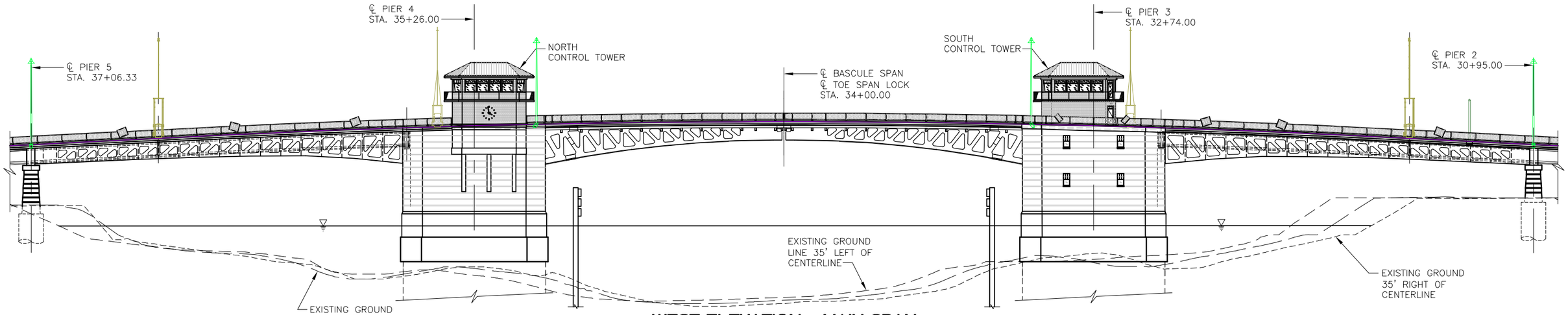

WEST ELEVATION - MAIN SPAN

20 10 0 20 40
SCALE IN FEET

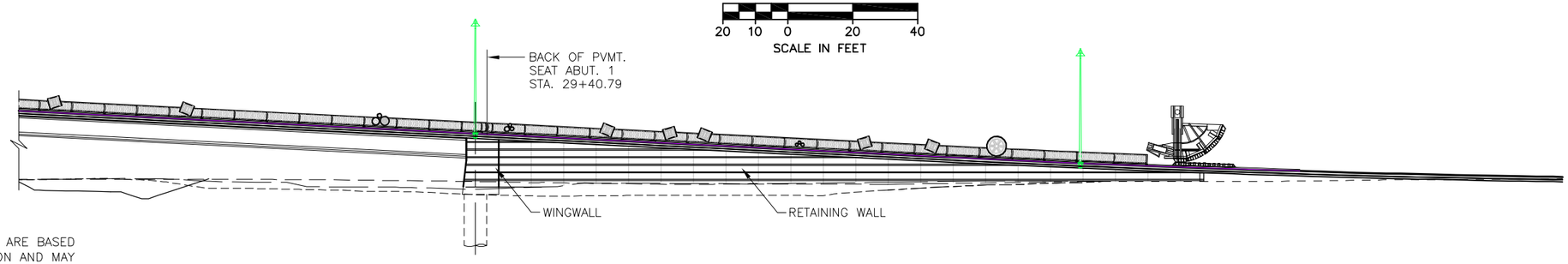

NOTE:
EXISTING GROUND LINES ARE BASED ON HISTORIC INFORMATION AND MAY NOT ACCURATELY REFLECT PRESENT CONDITIONS.

WEST ELEVATION - SOUTH APPROACH

20 10 0 20 40
SCALE IN FEET

FIELD BOOK:		
SURVEYED:		
SURVEY BASE MAP:		
DESIGN ENTERED:	D. NORMAN	04/2009
DESIGNED	D. NORMAN	04/2009
CHECKED:	G. DORN	12/2009
SUPERVISOR:	R. JOHNSON	01/2010

NUM.	REVISION	BY	DATE

GERALD L. DORN
STATE OF WASHINGTON
21429
STRUCTURAL ENGINEER
PROFESSIONAL ENGINEER

HNTB

FED. AID No.
PROJECT No. 300197
SURVEY No. 32-24-4-22
MAINTENANCE DIVISION No. 3

KING COUNTY DEPT. OF TRANSPORTATION
HAROLD TANIGUCHI, DIRECTOR
SOUTH PARK BRIDGE #3179 REPLACEMENT
BRIDGE ARCH. ELEVATION – WEST VIEW

King County

BG02
SHEET 529 OF 667 SHEETS
316-63 (____)

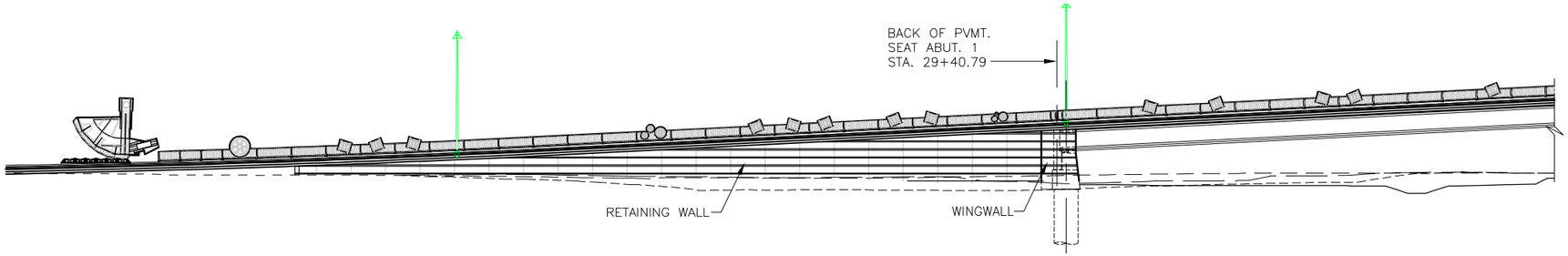

EAST ELEVATION - SOUTH APPROACH

20 10 0 20 40
SCALE IN FEET

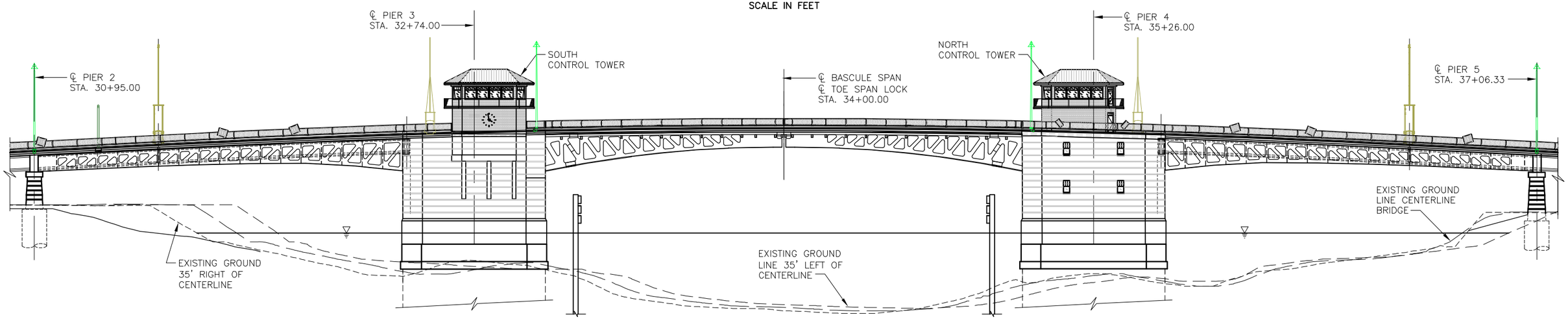

EAST ELEVATION - MAIN SPAN

20 10 0 20 40
SCALE IN FEET

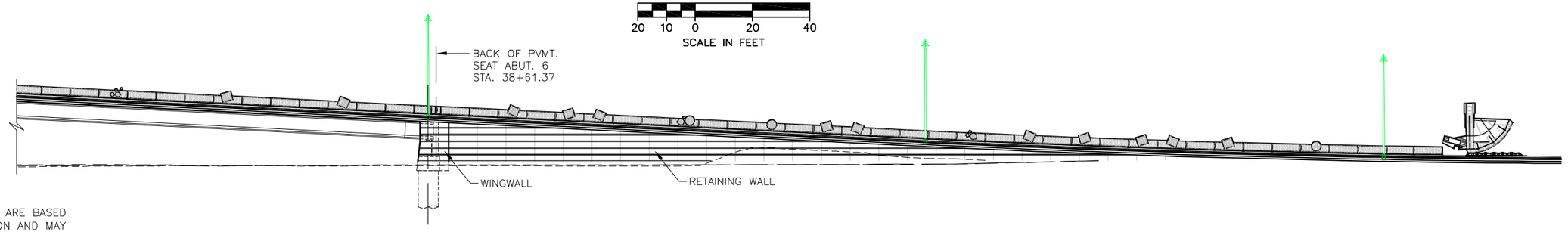

NOTE:
EXISTING GROUND LINES ARE BASED ON HISTORIC INFORMATION AND MAY NOT ACCURATELY REFLECT PRESENT CONDITIONS.

EAST ELEVATION - NORTH APPROACH

20 10 0 20 40
SCALE IN FEET

FIELD BOOK:					
SURVEYED:					
SURVEY BASE MAP:					
DESIGN ENTERED: D. NORMAN	04/2009				
DESIGNED D. NORMAN	04/2009				
CHECKED: G. DORN	12/2009				
SUPERVISOR: R. JOHNSON	01/2010	NUM.	REVISION	BY	DATE

GERALD L. DORN — STATE OF WASHINGTON — 35400 — STRUCTURAL ENGINEER — PROFESSIONAL ENGINEER

HNTB

FED. AID No.
PROJECT No. 300197
SURVEY No. 32-24-4-22
MAINTENANCE DIVISION No. 3

KING COUNTY DEPT. OF TRANSPORTATION
HAROLD TANIGUCHI, DIRECTOR

SOUTH PARK BRIDGE #3179 REPLACEMENT

BRIDGE ARCH. ELEVATION - EAST VIEW

King County

BG03

SHEET 530 OF 667 SHEETS

316-63 (___)

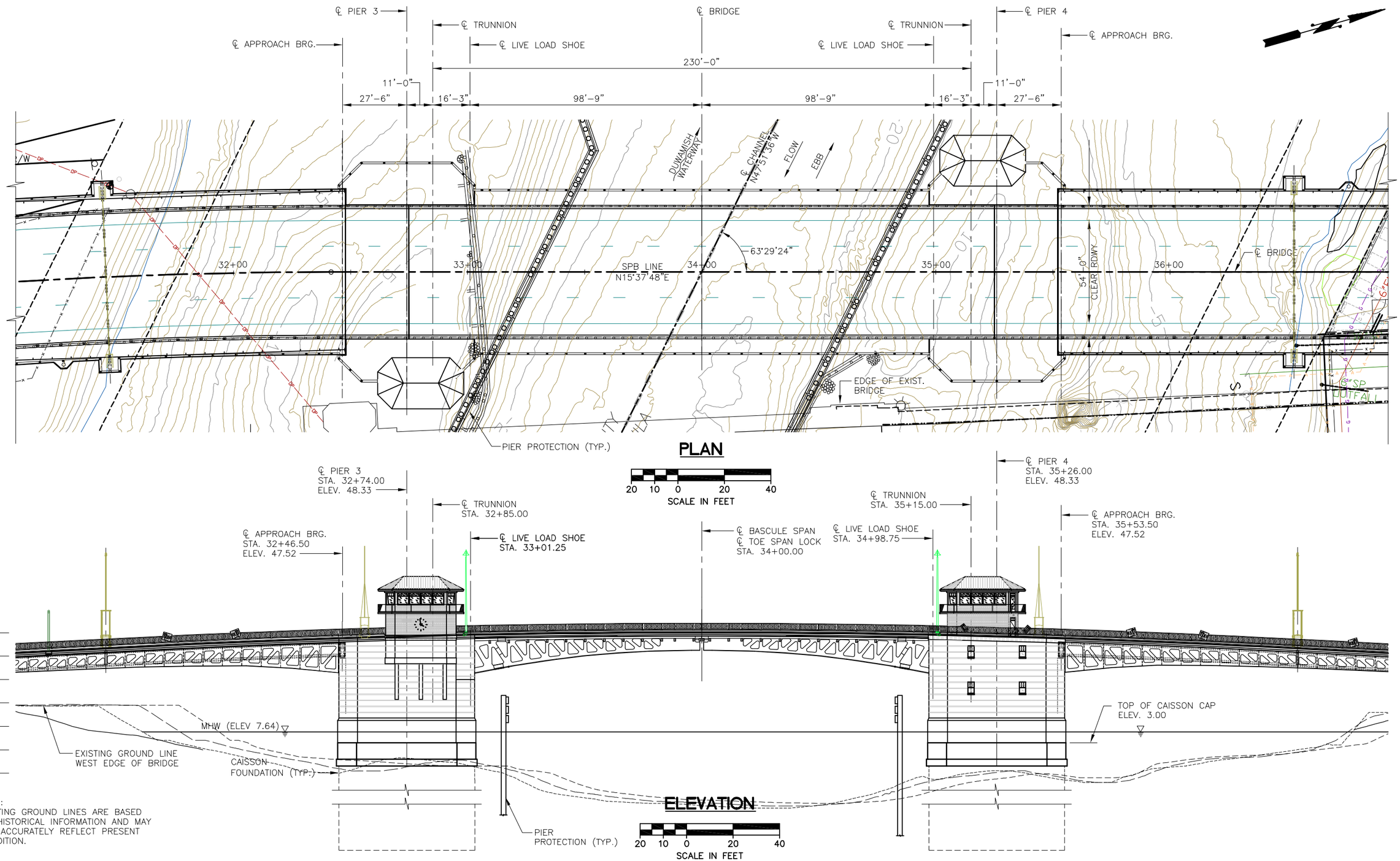

NOTE:
EXISTING GROUND LINES ARE BASED ON HISTORICAL INFORMATION AND MAY NOT ACCURATELY REFLECT PRESENT CONDITION.

FIELD BOOK:					
SURVEYED:					
SURVEY BASE MAP:					
DESIGN ENTERED:	D. NORMAN	04/2009			
DESIGNED	T. ZOLI	04/2009			
CHECKED:	G. DORN	04/2009			
SUPERVISOR:	R. JOHNSON	04/2009	NUM.	REVISION	BY / DATE

GERALD L. DORN — STATE OF WASHINGTON — 21488 — STRUCTURAL ENGINEER — PROFESSIONAL ENGINEER

HNTB

FED. AID No.

PROJECT No. 300197

SURVEY No. 32-24-4-22

MAINTENANCE DIVISION No. 3

KING COUNTY DEPT. OF TRANSPORTATION
HAROLD TANIGUCHI, DIRECTOR

SOUTH PARK BRIDGE #3179 REPLACEMENT

BASCULE BRIDGE
PLAN AND ELEVATION

King County

BG04

SHEET 531 OF 667 SHEETS

316-63 (____)

NOTES:

1. THIS RAIL SEGMENT REQUIRES CURB BOX OUTS. SEE RAILING TABLES ON SHEET PR08 & PR09 FOR PANEL INFORMATION.

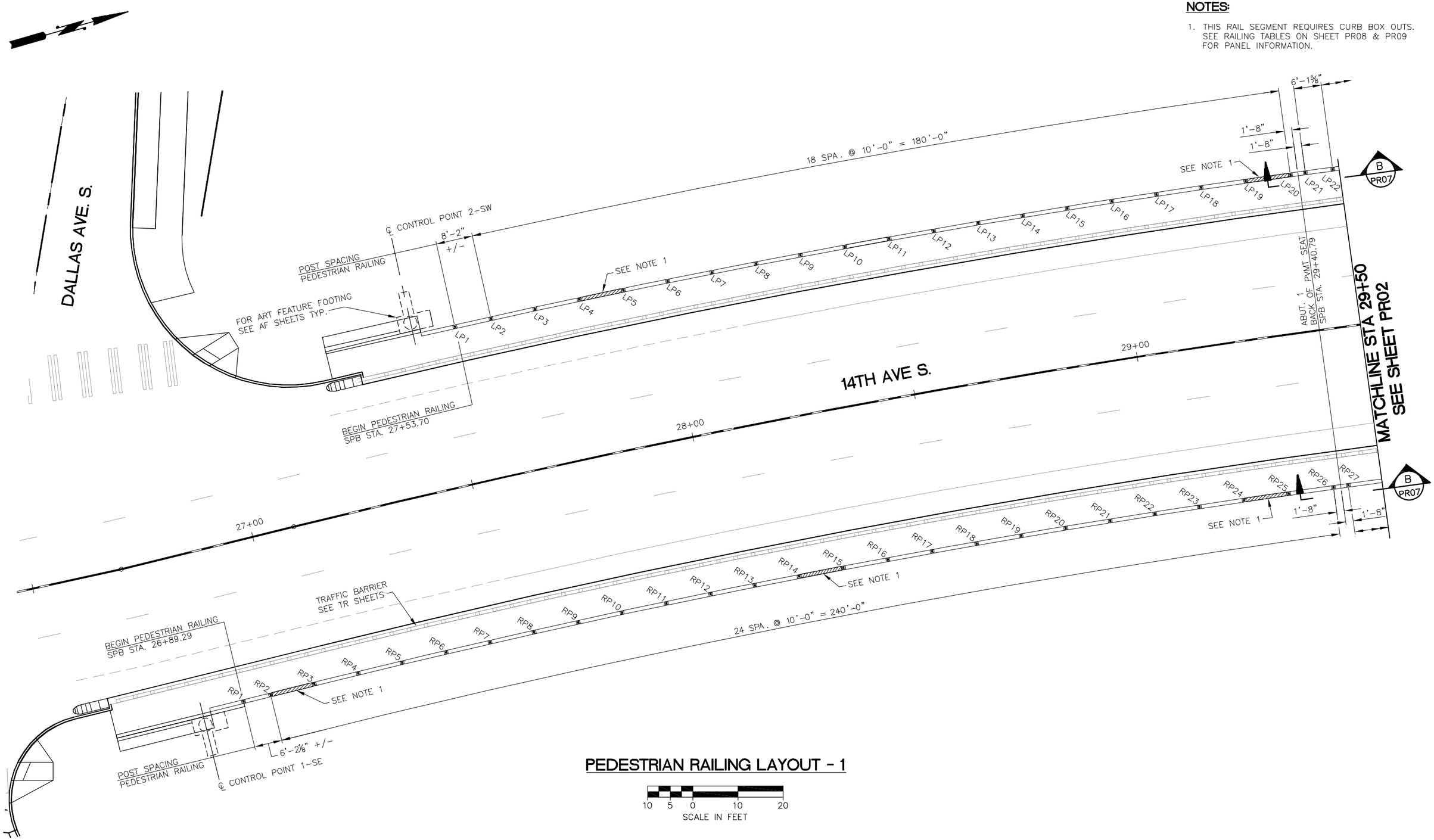

PEDESTRIAN RAILING LAYOUT - 1

10 5 0 10 20
SCALE IN FEET

FIELD BOOK:							
SURVEYED:							
SURVEY BASE MAP:							
DESIGN ENTERED:	S. COUTURE	09/2009					
DESIGNED	T. MCAULIFFE	10/2009					
CHECKED:	M. GIESMANN	10/2009					
SUPERVISOR:	R. JOHNSON	01/2010	NUM.	REVISION	BY	DATE	

DAVID DEANS McCUTCHEON JR. STATE OF WASHINGTON 45472 REGISTERED PROFESSIONAL ENGINEER

HNTB

FED. AID No.

PROJECT No. 300197

SURVEY No. 32-24-4-22

MAINTENANCE DIVISION No. 3

KING COUNTY DEPT. OF TRANSPORTATION
HAROLD TANIGUCHI, DIRECTOR

SOUTH PARK BRIDGE #3179 REPLACEMENT

PEDESTRIAN RAILING
LAYOUT - 1

King County

PR01

SHEET 532 OF 667 SHEETS

316-63 (___)

NOTES:

1. THIS RAIL SEGMENT REQUIRES CURB BOX OUTS. SEE RAILING TABLES ON SHEET PR08 & PR09 FOR PANEL INFORMATION.

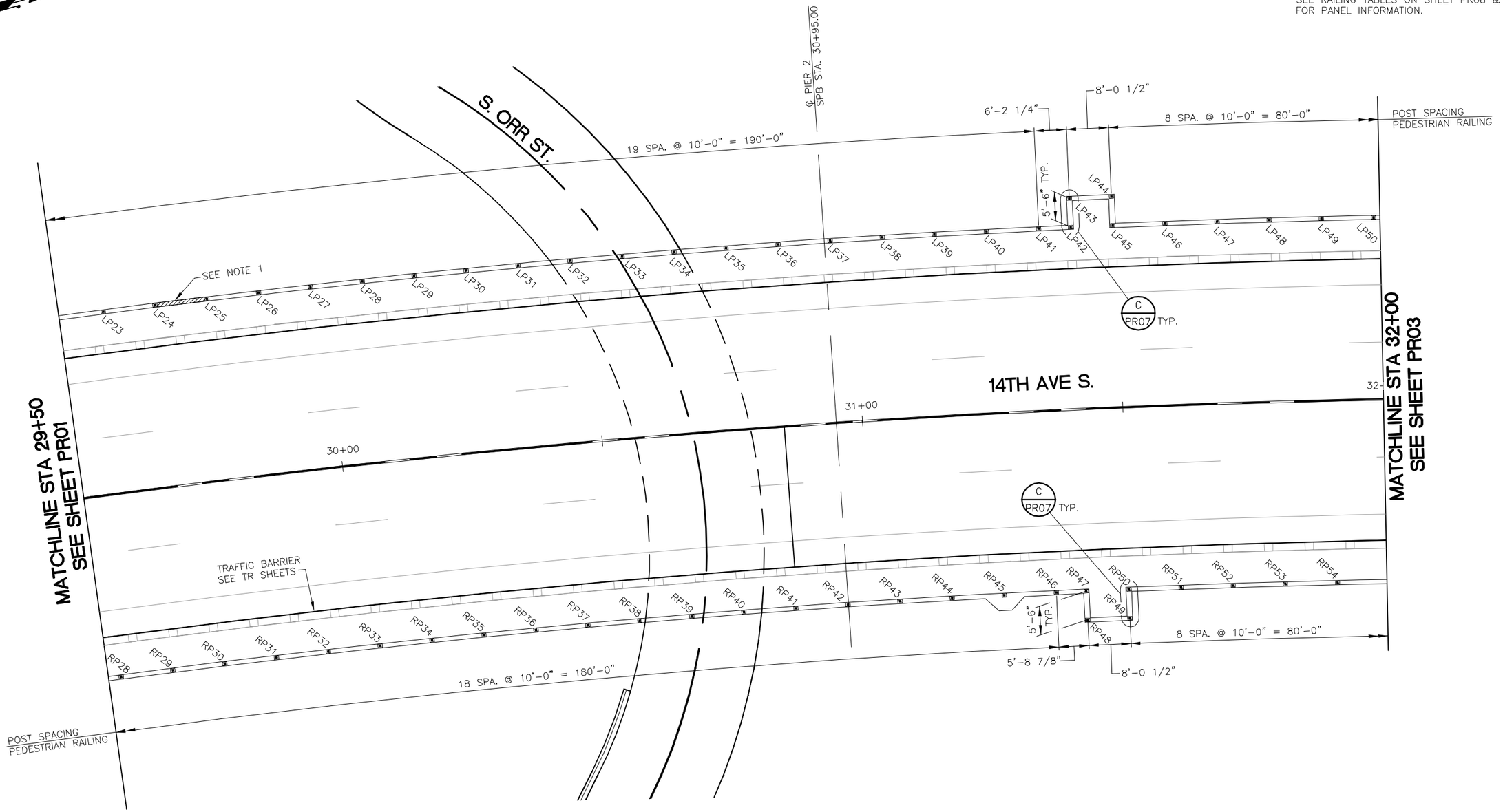

PEDESTRIAN RAILING LAYOUT - 2

10 5 0 10 20
SCALE IN FEET

FIELD BOOK:				
SURVEYED:				
SURVEY BASE MAP:				
DESIGN ENTERED:	S. COUTURE	09/2009		
DESIGNED	T. MCAULIFFE	10/2009		
CHECKED:	M. GIESMANN	10/2009		
SUPERVISOR:	R. JOHNSON	01/2010	NUM.	REVISION / BY / DATE

DAVID DEANE MCCURRY JR. STATE OF WASHINGTON 48478 REGISTERED PROFESSIONAL ENGINEER

HNTB

FED. AID No.

PROJECT No. 300197

SURVEY No. 32-24-4-22

MAINTENANCE DIVISION No. 3

KING COUNTY DEPT. OF TRANSPORTATION
HAROLD TANIGUCHI, DIRECTOR

SOUTH PARK BRIDGE #3179 REPLACEMENT

PEDESTRIAN RAILING
LAYOUT - 2

King County

PR02

SHEET 533 OF 667 SHEETS

316-63 (____)

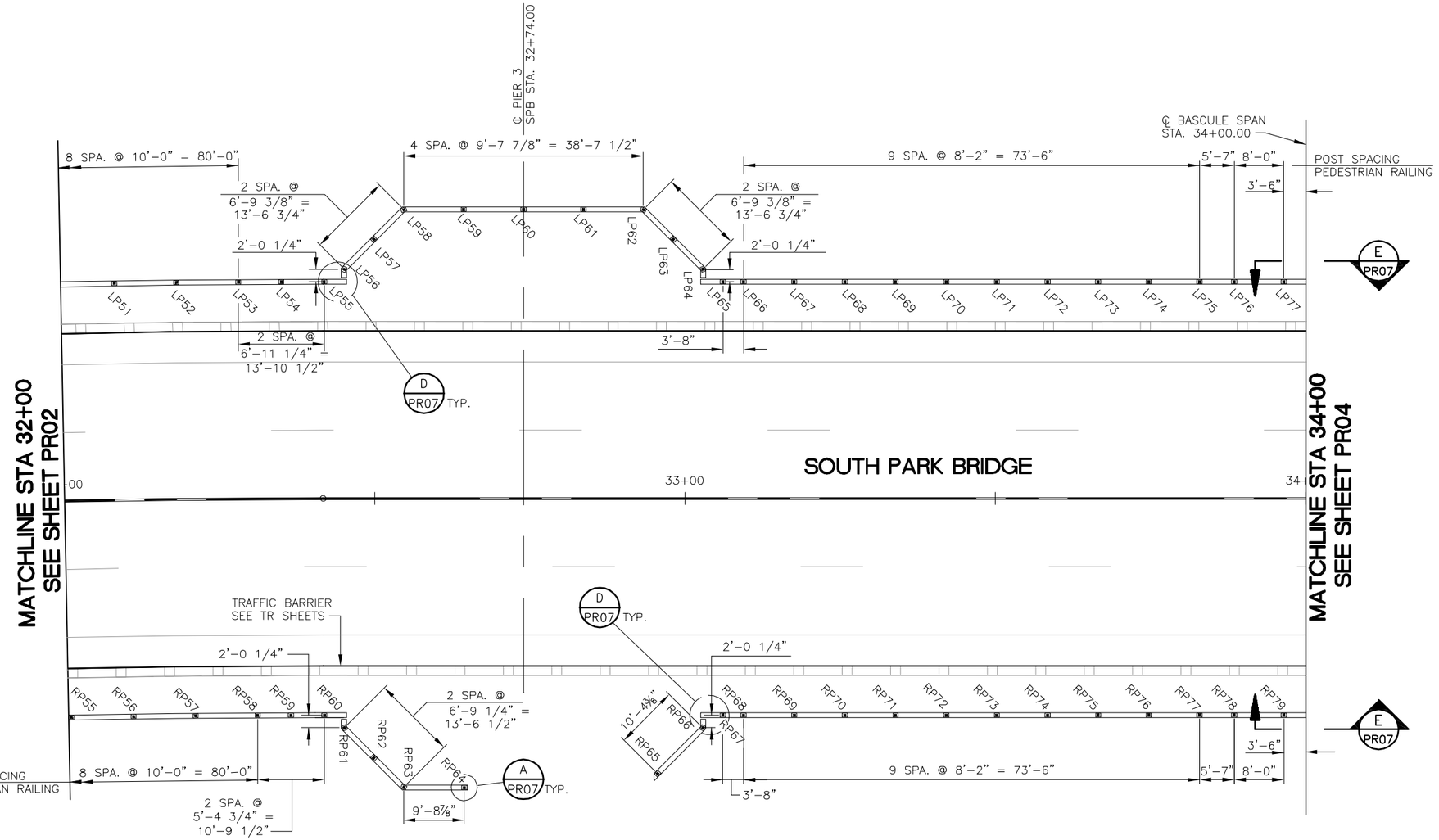

PEDESTRIAN RAILING LAYOUT - 3

10 5 0 10 20
SCALE IN FEET

FIELD BOOK:							
SURVEYED:							
SURVEY BASE MAP:							
DESIGN ENTERED:	S. COUTURE	09/2009					
DESIGNED	T. MCAULIFFE	10/2009					
CHECKED:	M. GIESMANN	10/2009					
SUPERVISOR:	R. JOHNSON	01/2010	NUM.	REVISION	BY	DATE	

DAVID DEANE McCURDY JR. STATE OF WASHINGTON 25472 REGISTERED PROFESSIONAL ENGINEER

HNTB

FED. AID No.

PROJECT No. 300197

SURVEY No. 32-24-4-22

MAINTENANCE DIVISION No. 3

KING COUNTY DEPT. OF TRANSPORTATION
HAROLD TANIGUCHI, DIRECTOR
SOUTH PARK BRIDGE #3179 REPLACEMENT
PEDESTRIAN RAILING
LAYOUT – 3

King County

PR03

SHEET 534 OF 667 SHEETS

316-63 (___)

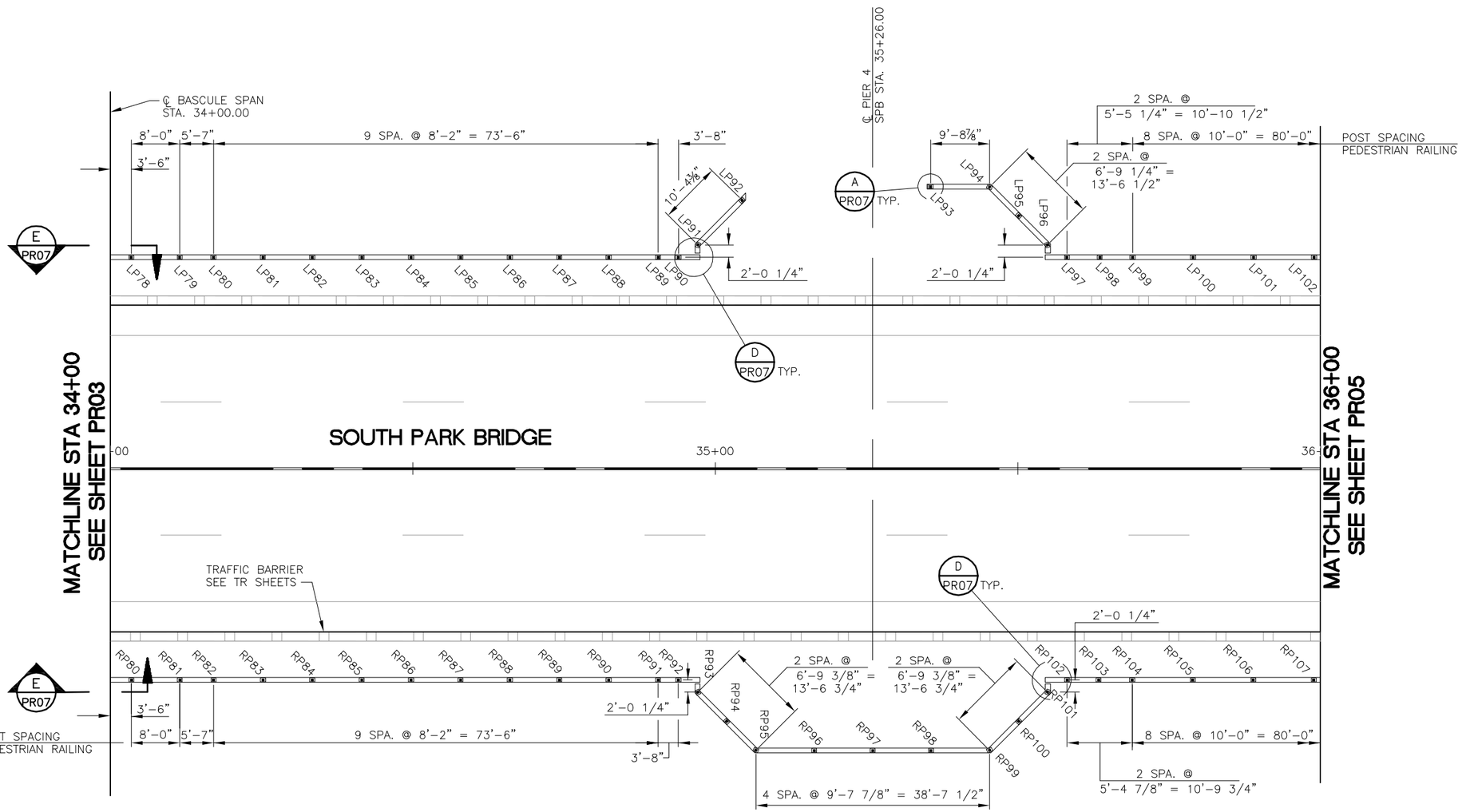

PEDESTRIAN RAILING LAYOUT - 4

10 5 0 10 20
SCALE IN FEET

FIELD BOOK:							
SURVEYED:							
SURVEY BASE MAP:							
DESIGN ENTERED:	S. COUTURE	09/2009					
DESIGNED	T. MCAULIFFE	10/2009					
CHECKED:	M. GIESMANN	10/2009					
SUPERVISOR:	R. JOHNSON	01/2010	NUM.	REVISION	BY	DATE	

DAVID DRAKE McCURRY JR. STATE OF WASHINGTON 18472 REGISTERED PROFESSIONAL ENGINEER

HNTB

FED. AID No.

PROJECT No. 300197

SURVEY No. 32-24-4-22

MAINTENANCE DIVISION No. 3

KING COUNTY DEPT. OF TRANSPORTATION
HAROLD TANIGUCHI, DIRECTOR
SOUTH PARK BRIDGE #3179 REPLACEMENT
PEDESTRIAN RAILING
LAYOUT – 4

King County

PR04

SHEET 535 OF 667 SHEETS

316-63 (___)

NOTES:

1. THIS RAIL SEGMENT REQUIRES CURB BOX OUTS. SEE RAILING TABLES ON SHEET PR08 & PR09 FOR PANEL INFORMATION.

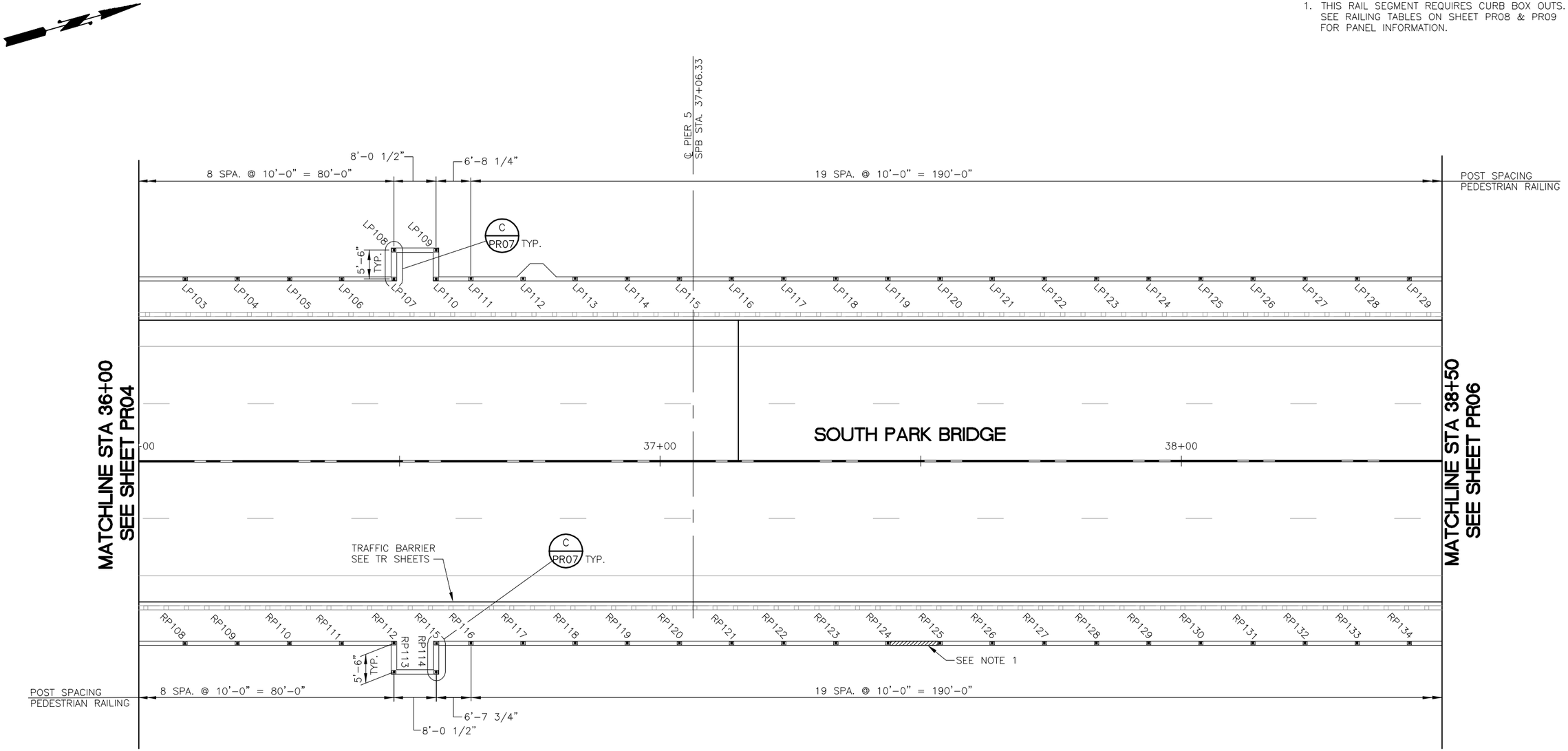

PEDESTRIAN RAILING LAYOUT - 5

10 5 0 10 20
SCALE IN FEET

FIELD BOOK:						FED. AID No.		KING COUNTY DEPT. OF TRANSPORTATION HAROLD TANIGUCHI, DIRECTOR **SOUTH PARK BRIDGE #3179 REPLACEMENT** PEDESTRIAN RAILING LAYOUT – 5	King County 316-63 (___)	PR05 SHEET 536 OF 667 SHEETS
SURVEYED:						PROJECT No. 300197				
SURVEY BASE MAP:						SURVEY No. 32-24-4-22				
DESIGN ENTERED: S. COUTURE	09/2009					MAINTENANCE DIVISION No. 3				
DESIGNED T. MCAULIFFE	10/2009									
CHECKED: M. GIESMANN	10/2009									
SUPERVISOR: R. JOHNSON	01/2010	NUM.	REVISION	BY	DATE					

NOTES:

1. THIS RAIL SEGMENT REQUIRES CURB BOX OUTS. SEE RAILING TABLES ON SHEET PR08 & PR09 FOR PANEL INFORMATION.

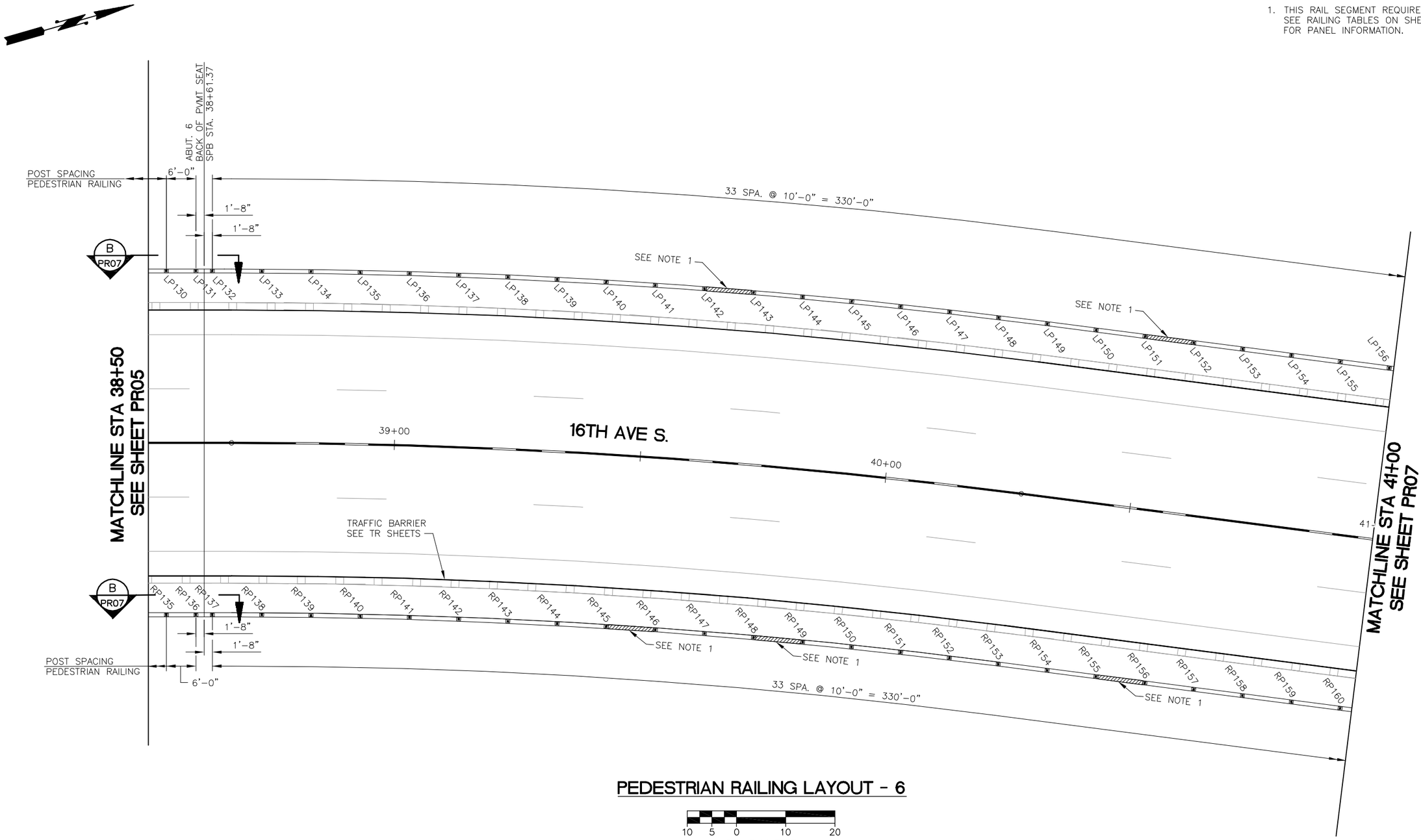

PEDESTRIAN RAILING LAYOUT - 6

10 5 0 10 20
SCALE IN FEET

FIELD BOOK:							
SURVEYED:							
SURVEY BASE MAP:							
DESIGN ENTERED:	S. COUTURE	09/2009					
DESIGNED	T. MCAULIFFE	10/2009					
CHECKED:	M. GIESMANN	10/2009					
SUPERVISOR:	R. JOHNSON	01/2010	NUM.	REVISION	BY	DATE	

DAVID DEANE MCCURRY JR. STATE OF WASHINGTON 46478 REGISTERED PROFESSIONAL ENGINEER

HNTB

FED. AID No.

PROJECT No. 300197

SURVEY No. 32-24-4-22

MAINTENANCE DIVISION No. 3

KING COUNTY DEPT. OF TRANSPORTATION
HAROLD TANIGUCHI, DIRECTOR

SOUTH PARK BRIDGE #3179 REPLACEMENT

PEDESTRIAN RAILING
LAYOUT – 6

King County

PR06

SHEET 537 OF 667 SHEETS

316-63 (___)

NOTES:

1. THIS RAIL SEGMENT REQUIRES CURB BOX OUTS. SEE RAILING TABLES ON PR08 & PR09 FOR PANEL INFORMATION.
2. WELD 5/16" DIA. SHANK EYE BOLT WITH 3/4" INSIDE DIA. EYE TO TOP AND BOTTOM RAILINGS PRIOR TO GALVANIZING TO FASTEN NAVIGATION LIGHT RETREIVING CHAIN. SEE SHEET BE16.

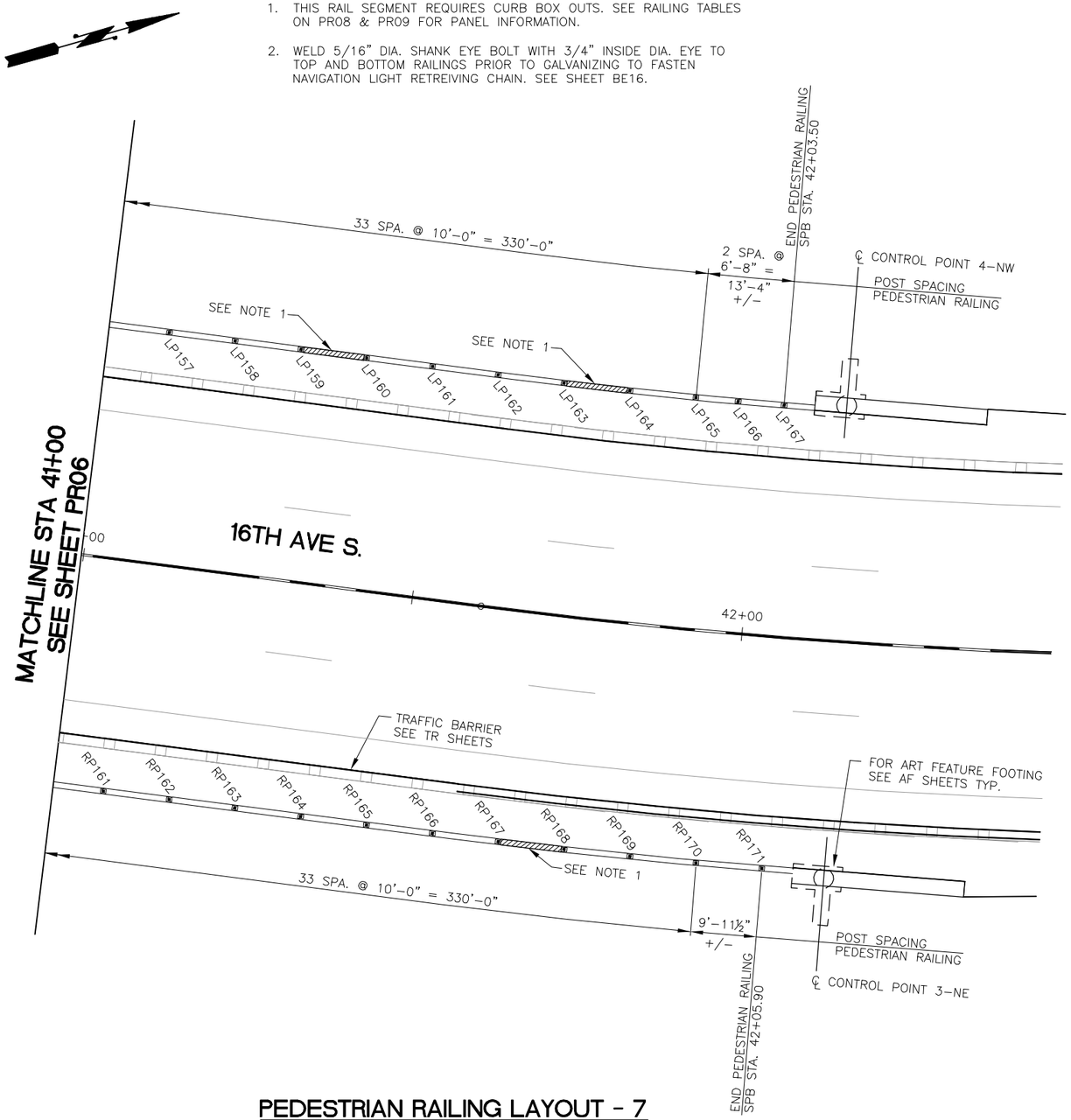

PEDESTRIAN RAILING LAYOUT - 7

10 5 0 10 20
SCALE IN FEET

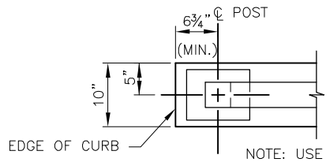

DETAIL A — PR03 PR04

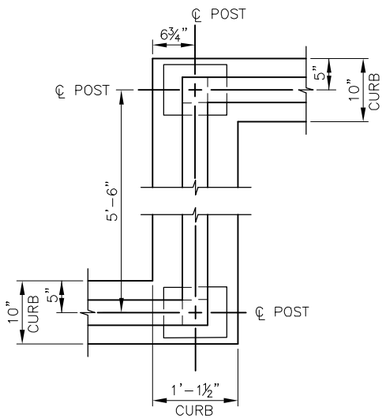

DETAIL C — PR02 PR05

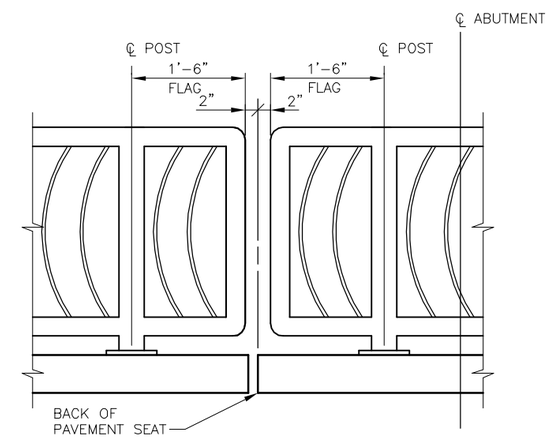

APPROACH SLAB SIDE

VIEW B — PR01 PR06

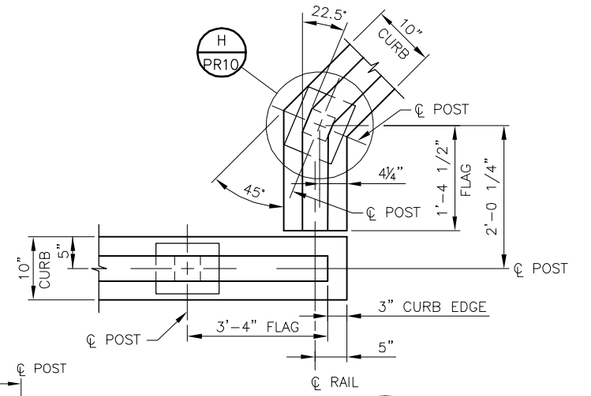

DETAIL D — PR03 PR04

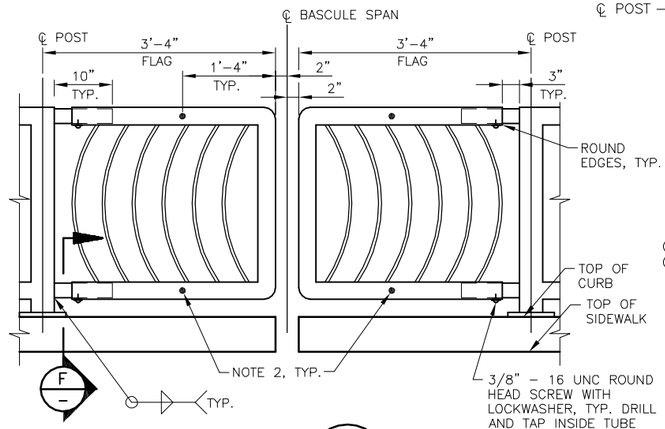

VIEW E — SCALE: NTS — PR03 PR04

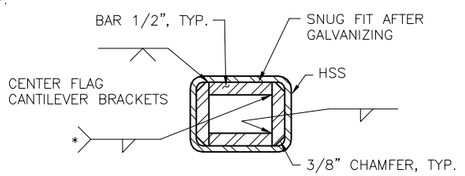

* ROUND ALL EDGES PRIOR TO GALV. TO ALLOW PLACEMENT IN HSS.

SECTION F — —

FIELD BOOK:					
SURVEYED:					
SURVEY BASE MAP:					
DESIGN ENTERED:	S. COUTURE	09/2009			
DESIGNED	T. MCAULIFFE	10/2009			
CHECKED:	M. GIESMANN	10/2009			
SUPERVISOR:	R. JOHNSON	01/2010	NUM.	REVISION	BY / DATE

DAVID FRANK McCOURT JR. STATE OF WASHINGTON 18472 REGISTERED PROFESSIONAL ENGINEER

HNTB

FED. AID No.
PROJECT No. 300197
SURVEY No. 32-24-4-22
MAINTENANCE DIVISION No. 3

Barbara Grygutis Sculpture LLC

KING COUNTY DEPT. OF TRANSPORTATION
HAROLD TANIGUCHI, DIRECTOR

SOUTH PARK BRIDGE #3179 REPLACEMENT

PEDESTRIAN RAILING
LAYOUT - 7 AND DETAILS

King County

PR07

SHEET 538 OF 667 SHEETS

316-63 (___)

	CONNECTION		PANEL			
POST	BACK STATION	UP STATION	BACK STATION	UP STATION	PICKET ORIENT.	COMMENT
LP1	END	F	N/A	TP	R	END POST
LP2	F	E	TP	TP	R	
LP3	F	F	TP	TP	R	
LP4	F	E	TP	GP15	R	
LP5	F	F	GP15	TP	R	
LP6	F	E	TP	HPC	R	
LP7	F	F	HPC	TP	R	
LP8	F	E	TP	HPD	R	
LP9	F	F	HPD	TP	R	
LP10	F	E	TP	GP17	R	
LP11	F	F	GP17	TP	R	
LP12	F	E	TP	TP	R	
LP13	F	F	TP	HPC	R	
LP14	F	E	HPC	HPD	R	
LP15	F	F	HPD	TP	R	
LP16	F	E	TP	HPC	R	
LP17	F	F	HPC	TP	R	
LP18	F	E	TP	TP	R	
LP19	F	F	TP	GP10	R	
LP20	F	FLAG	GP10	FLAG	R	VIEW B, PR07
LP21	FLAG	F	FLAG	TP	R	VIEW B, PR07
LP22	F	F	TP	TP	R	
LP23	E	F	TP	TP	R	
LP24	F	F	TP	GP6	R	
LP25	E	F	GP6	TP	R	
LP26	F	F	TP	TP	R	
LP27	E	F	TP	TP	R	
LP28	F	F	TP	TP	R	
LP29	E	F	TP	TP	R	
LP30	F	F	TP	HPC	R	
LP31	E	F	HPC	TP	R	
LP32	F	F	TP	TP	R	
LP33	E	F	TP	TP	R	
LP34	F	F	TP	HPD	R	
LP35	E	F	HPD	TP	R	
LP36	F	F	TP	TP	R	
LP37	E	F	TP	TP	R	
LP38	F	F	TP	TP	R	
LP39	E	F	TP	TP	R	
LP40	F	E	TP	HPC	R	
LP41	F	F	HPC	TP	R	
LP42	F	E	TP	TP	R	90 DEG.
LP43	F	E	TP	TP	R	90 DEG.
LP44	F	F	TP	TP	R	90 DEG.
LP45	E	F	TP	TP	R	90 DEG.
LP46	F	F	TP	TP	R	
LP47	E	F	TP	TP	R	
LP48	F	F	TP	TP	R	
LP49	F	E	TP	HPC	R	
LP50	F	F	HPC	TP	R	
LP51	F	E	TP	TP	R	
LP52	F	F	TP	HPD	R	
LP53	F	E	HPD	TP	R	
LP54	F	F	TP	TP	R	
LP55	F	FLAG	TP	FLAG	R	DETAIL D, PR07
LP56	FLAG	F	FLAG	TP	R	135 DEG.
LP57	F	F	TP	TP	R	
LP58	E	F	TP	HPF	R	135 DEG.
LP59	E	F	HPF	TP	R	
LP60	F	F	TP	TP	R	
LP61	F	E	TP	HPE	R	
LP62	F	E	HPE	TP	R	135 DEG.
LP63	F	F	TP	TP	R	
LP64	F	FLAG	TP	FLAG	R	135 DEG.
LP65	FLAG	F	FLAG	TP	R	DETAIL D, PR07
LP66	F	F	TP	TP	R	
LP67	F	E	TP	TP	R	
LP68	F	F	TP	TP	R	
LP69	F	E	TP	TP	R	
LP70	F	F	TP	TP	R	

	CONNECTION		PANEL			
POST	BACK STATION	UP STATION	BACK STATION	UP STATION	PICKET ORIENT.	COMMENT
LP71	F	E	TP	TP	R	
LP72	F	F	TP	TP	R	
LP73	F	E	TP	TP	R	
LP74	F	F	TP	TP	R	
LP75	F	E	TP	TP	R	
LP76	F	F	TP	TP	R	
LP77	F	FLAG	TP	FLAG	R	VIEW E, PR07
LP78	FLAG	F	FLAG	TP	L	VIEW E, PR07
LP79	F	F	TP	TP	L	
LP80	E	F	TP	TP	L	
LP81	F	F	TP	TP	L	
LP82	E	F	TP	TP	L	
LP83	F	F	TP	TP	L	
LP84	E	F	TP	TP	L	
LP85	F	F	TP	TP	L	
LP86	E	F	TP	TP	L	
LP87	F	F	TP	TP	L	
LP88	E	F	TP	TP	L	
LP89	F	F	TP	TP	L	
LP90	F	FLAG	TP	FLAG	L	DETAIL D, PR07
LP91	FLAG	F	FLAG	TP	L	135 DEG.
LP92	F	END	TP	N/A	L	END POST
LP93	END	F	N/A	TP	L	END POST
LP94	F	E	TP	TP	L	135 DEG.
LP95	F	F	TP	TP	L	
LP96	F	FLAG	TP	FLAG	L	135 DEG.
LP97	FLAG	F	FLAG	TP	L	DETAIL D, PR07
LP98	F	F	TP	TP	L	
LP99	E	F	TP	HPB	L	
LP100	F	F	HPB	TP	L	
LP101	E	F	TP	TP	L	
LP102	F	F	TP	TP	L	
LP103	E	F	TP	TP	L	
LP104	F	F	TP	HPA	L	
LP105	F	E	HPA	TP	L	
LP106	F	F	TP	TP	L	
LP107	F	E	TP	TP	L	90 DEG.
LP108	F	F	TP	TP	L	90 DEG.
LP109	E	F	TP	TP	L	90 DEG.
LP110	E	F	TP	TP	L	90 DEG.
LP111	F	F	TP	HPB	L	
LP112	E	F	HPB	TP	L	
LP113	F	E	TP	TP	L	
LP114	F	F	TP	TP	L	
LP115	F	E	TP	TP	L	
LP116	F	F	TP	TP	L	
LP117	F	E	TP	HPA	L	
LP118	F	F	HPA	TP	L	
LP119	F	E	TP	HPB	L	
LP120	F	F	HPB	TP	L	
LP121	F	E	TP	TP	L	
LP122	F	F	TP	HPA	L	
LP123	F	E	HPA	TP	L	
LP124	F	F	TP	HPB	L	
LP125	F	E	HPB	TP	L	
LP126	F	F	TP	TP	L	
LP127	F	E	TP	TP	L	
LP128	F	F	TP	HPA	L	
LP129	F	E	HPA	TP	L	
LP130	F	F	TP	TP	L	
LP131	F	FLAG	TP	FLAG	L	VIEW B, PR07
LP132	FLAG	F	FLAG	TP	L	VIEW B, PR07
LP133	F	F	TP	GP9	L	
LP134	E	F	GP9	TP	L	
LP135	F	F	TP	HPA	L	
LP136	E	F	HPA	HPB	L	
LP137	F	F	HPB	TP	L	
LP138	E	F	TP	HPA	L	
LP139	F	F	HPA	TP	L	
LP140	E	F	TP	TP	L	

	CONNECTION		PANEL			
POST	BACK STATION	UP STATION	BACK STATION	UP STATION	PICKET ORIENT.	COMMENT
LP141	F	F	TP	TP	L	
LP142	E	F	TP	GP12	L	
LP143	F	F	GP12	TP	L	
LP144	E	F	TP	TP	L	
LP145	F	F	TP	HPB	L	
LP146	E	F	HPB	TP	L	
LP147	F	F	TP	HPA	L	
LP148	E	F	HPA	HPB	L	
LP149	F	F	HPB	TP	L	
LP150	E	F	TP	TP	L	
LP151	F	F	TP	GP5	L	
LP152	E	F	GP5	TP	L	
LP153	F	F	TP	TP	L	
LP154	E	F	TP	HPB	L	
LP155	F	F	HPB	HPA	L	
LP156	E	F	HPA	HPB	L	
LP157	F	F	HPB	TP	L	
LP158	E	F	TP	TP	L	
LP159	F	F	TP	GP4	L	
LP160	E	F	GP4	TP	L	
LP161	F	F	TP	TP	L	
LP162	E	F	TP	TP	L	
LP163	F	F	TP	GP16	L	
LP164	E	F	GP16	TP	L	
LP165	F	F	TP	TP	L	
LP166	E	F	TP	TP	L	
LP167	F	END	TP	N/A	L	END POST

LEGEND

E – EXPANSION CONNECTION (SEE SHEET PR09)
F – FIXED CONNECTION (SEE SHEET PR09)
N/A – NO PANEL (SEE END CONNECTION SHEET PR09)
FLAG – CANTILEVERED PANEL (SEE FLAG CONNECTION SHEET PR09)
TP – TYPICAL PANEL (SEE SHEET PR09)
HPX – HISTORICAL PANEL "X" (SEE SHEET PR11)
GPXX – GEAR PANEL "XX" (SEE SHEET PR13 – PR15)
L – LEFT (THIS SHEET)
R – RIGHT (THIS SHEET)

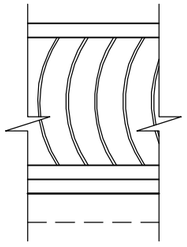

LEFT PICKET ORIENT.
RAILING PANEL
AS VIEWED FROM EXTERIOR

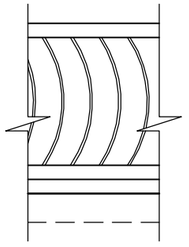

RIGHT PICKET ORIENT.
RAILING PANEL
AS VIEWED FROM EXTERIOR

NOTES:

1. FABRICATION OF PEDESTRIAN RAILING BY OTHERS.
2. ALL PEDESTRIAN HARDWARE EXCLUSIVE OF ANCHOR BOLT ASSEMBLIES WILL BE PROVIDED BY OTHERS. ANCHOR BOLTS AND GEAR POST ANCHORAGES SHALL BE GALVANIZED PER AASHTO M232.
3. INFORMATION PERTAINING TO THE SALVAGED ORNAMENTAL IRON RAIL PANELS AND SALVAGED GEARS WAS OBTAINED FROM THE 1929 CONSTRUCTION DRAWINGS. NO PRESENTATION OR WARRANTY IS MADE THAT THE EXISTING ITEMS TO BE SALVAGED DO NOT DEVIATE FROM THAT SHOWN IN THE 1929 CONSTRUCTION DRAWINGS.
4. FIELD ADJUSTMENTS OF THE PEDESTRIAN RAILING AND ASSOCIATED ORNAMENTAL IRON RAIL PANELS AND GEARS THAT REQUIRES CUTTING OF THE METAL OR OTHERWISE COMPROMISING THE GALVANIZING AND PAINT SYSTEM WILL NOT BE ALLOWED, EXCEPT WHERE FIELD DRILLING AND TAPPING IS NOTED.
5. THE CONTRACTOR SHALL SALVAGE AND REPLACE THE EXISTING ORNAMENTAL IRON RAIL PANELS ON THE EXISTING BRIDGE WITH TEMPORARY REPLACEMENT PANELS TO ALLOW FABRICATION OF THE HISTORIC PANELS IN THE PROPOSED PEDESTRIAN RAILING.
6. AFTER THE EXISTING GEARS HAVE BEEN SALVAGED BY THE CONTRACTOR AND PREPARED BY OTHERS, THE CONTRACTOR SHALL REMOVE THE TEMPORARY GEAR OPENING COVERS AND INSTALL THE PREPARED GEARS AND ASSOCIATED GEAR SUPPORTS AND CONNECTIONS.
7. SEE SHEETS DM04 THROUGH DM07 FOR SALVAGE INFORMATION.
8. SEE SHEETS AF01 THROUGH AF09 FOR INFORMATION RELATED TO ARTWORK IMMEDIATELY ADJACENT TO THE TERMINUS OF THE PEDESTRIAN RAILING.
9. FV = FIELD VERIFY
10. ANCHOR BOLTS SHALL CONFORM TO AASHTO M314 (ASTM F1554) GRADE 55. GEAR POST ANCHORAGE SHALL BE COMPOSED OF ALL–THREAD C–1045 UNC W/ HEAVY DUTY HEX NUTS ASTM 194 GRADE 2H, OR APPROVED EQUALS, AND C2T ASTM A108 COUPLERS. ANCHOR BOLTS ON BASCULE SPAN SHALL BE ASTM A325.
11. THE PEDESTRIAN RAILING, ASSOCIATED GEAR SUPPORTS AND GEARS ARE GRAPHICALLY DEPICTED WITHIN THE CONTRACT PLANS AS BEING HORIZONTAL AND PLUMB FOR PURPOSES OF CLARITY. THE PEDESTRIAN RAILING AND ASSOCIATED GEAR SUPPORTS WILL BE INSTALLED ON A PROFILE GRADE VERTICAL CURVE WITH SLOPES UP TO 5%. THE PEDESTRIAN RAILING RAILS SHALL BE FABRICATED TO BE, AND INSTALLED, TANGENT TO THE PROFILE GRADE AT THE POINT OF INSTALLATION. THE PEDESTRIAN RAILING POSTS AND GEAR SUPPORTS SHALL BE FABRICATED TO BE, AND INSTALLED, NORMAL TO A LINE THAT IS TANGENT TO THE PROFILE GRADE AT THE POINT OF INSTALLATION.

FIELD BOOK:			
SURVEYED:			
SURVEY BASE MAP:			
DESIGN ENTERED:	S. COUTURE	09/2009	
DESIGNED	T. MCAULIFFE	10/2009	
CHECKED:	M. GIESMANN	10/2009	
SUPERVISOR:	R. JOHNSON	01/2010	

NUM.	REVISION	BY	DATE

DAVID DEANE MCCURRY JR. STATE OF WASHINGTON 45478 REGISTERED PROFESSIONAL ENGINEER

HNTB

FED. AID No.
PROJECT No. 300197
SURVEY No. 32-24-4-22
MAINTENANCE DIVISION No. 3

Barbara Grygutis
Sculpture LLC

KING COUNTY DEPT. OF TRANSPORTATION
HAROLD TANIGUCHI, DIRECTOR
SOUTH PARK BRIDGE #3179 REPLACEMENT
PEDESTRIAN RAILING
TABLE AND DETAILS – 1

King County

PR08
SHEET 539 OF 667 SHEETS
316-63 (____)

POST	CONNECTION BACK STATION	CONNECTION UP STATION	PANEL BACK STATION	PANEL UP STATION	PICKET ORIENT.	COMMENT
RP1	END	F	N/A	TP	L	END POST
RP2	F	E	TP	GP14	L	
RP3	F	F	GP14	TP	L	
RP4	F	E	TP	TP	L	
RP5	F	F	TP	HPA	L	
RP6	F	E	HPA	HPB	L	
RP7	F	F	HPB	HPA	L	
RP8	F	E	HPA	TP	L	
RP9	F	F	TP	TP	L	
RP10	F	E	TP	TP	L	
RP11	F	F	TP	TP	L	
RP12	F	E	TP	TP	L	
RP13	F	F	TP	TP	L	
RP14	F	E	TP	GP3	L	
RP15	F	F	GP3	TP	L	
RP16	F	E	TP	TP	L	
RP17	F	F	TP	HPB	L	
RP18	F	E	HPB	HPA	L	
RP19	F	F	HPA	HPB	L	
RP20	F	E	HPB	TP	L	
RP21	F	F	TP	HPB	L	
RP22	F	E	HPB	HPA	L	
RP23	F	F	HPA	TP	L	
RP24	F	E	TP	GP8	L	
RP25	F	F	GP8	TP	L	
RP26	F	FLAG	TP	FLAG	L	VIEW B, PR07
RP27	FLAG	F	FLAG	TP	L	VIEW B, PR07
RP28	F	F	TP	TP	L	
RP29	E	F	TP	HPA	L	
RP30	F	F	HPA	TP	L	
RP31	E	F	TP	HPB	L	
RP32	F	F	HPB	TP	L	
RP33	E	F	TP	TP	L	
RP34	F	F	TP	HPA	L	
RP35	E	F	HPA	TP	L	
RP36	F	F	TP	HPB	L	
RP37	E	F	HPB	TP	L	
RP38	F	F	TP	TP	L	
RP39	E	F	TP	TP	L	
RP40	F	F	TP	HPB	L	
RP41	E	F	HPB	TP	L	
RP42	F	F	TP	TP	L	
RP43	E	F	TP	HPA	L	
RP44	F	F	HPA	TP	L	
RP45	F	E	TP	TP	L	
RP46	F	F	TP	TP	L	
RP47	F	E	TP	TP	L	90 DEG.
RP48	F	E	TP	TP	L	90 DEG.
RP49	F	F	TP	TP	L	90 DEG.
RP50	E	F	TP	TP	L	90 DEG.
RP51	F	F	TP	TP	L	
RP52	E	F	TP	TP	L	
RP53	F	F	TP	HPA	L	
RP54	F	E	HPA	TP	L	
RP55	F	F	TP	TP	L	
RP56	F	E	TP	HPB	L	
RP57	F	F	HPB	TP	L	
RP58	F	E	TP	TP	L	
RP59	F	F	TP	TP	L	
RP60	F	FLAG	TP	FLAG	L	DETAIL D, PR07
RP61	FLAG	F	FLAG	TP	L	135 DEG.
RP62	F	F	TP	TP	L	
RP63	E	F	TP	TP	L	135 DEG.
RP64	F	END	TP	N/A	L	END POST
RP65	END	F	N/A	TP	L	END POST
RP66	F	FLAG	TP	FLAG	L	135 DEG.
RP67	FLAG	F	FLAG	TP	L	DETAIL D, PR07
RP68	F	F	TP	TP	L	
RP69	F	E	TP	TP	L	
RP70	F	F	TP	TP	L	

POST	CONNECTION BACK STATION	CONNECTION UP STATION	PANEL BACK STATION	PANEL UP STATION	PICKET ORIENT.	COMMENT
RP71	F	E	TP	TP	L	
RP72	F	F	TP	TP	L	
RP73	F	E	TP	TP	L	
RP74	F	F	TP	TP	L	
RP75	F	E	TP	TP	L	
RP76	F	F	TP	TP	L	
RP77	F	E	TP	TP	L	
RP78	F	F	TP	TP	L	
RP79	F	FLAG	TP	FLAG	L	VIEW E, PR07
RP80	FLAG	F	FLAG	TP	R	VIEW E, PR07
RP81	F	F	TP	TP	R	
RP82	E	F	TP	TP	R	
RP83	F	F	TP	TP	R	
RP84	E	F	TP	TP	R	
RP85	F	F	TP	TP	R	
RP86	E	F	TP	TP	R	
RP87	F	F	TP	TP	R	
RP88	E	F	TP	TP	R	
RP89	F	F	TP	TP	R	
RP90	E	F	TP	TP	R	
RP91	F	F	TP	TP	R	
RP92	F	FLAG	TP	FLAG	R	DETAIL D, PR07
RP93	FLAG	F	FLAG	TP	R	135 DEG.
RP94	F	F	TP	TP	R	
RP95	E	F	TP	HPE	R	135 DEG.
RP96	E	F	HPE	TP	R	
RP97	F	F	TP	TP	R	
RP98	F	E	TP	HPF	R	
RP99	F	E	HPF	TP	R	135 DEG.
RP100	F	F	TP	TP	R	
RP101	F	FLAG	TP	FLAG	R	135 DEG.
RP102	FLAG	F	FLAG	TP	R	DETAIL D, PR07
RP103	F	F	TP	TP	R	
RP104	E	F	TP	TP	R	
RP105	F	F	TP	HPD	R	
RP106	E	F	HPD	TP	R	
RP107	F	F	TP	TP	R	
RP108	E	F	TP	HPC	R	
RP109	F	F	HPC	TP	R	
RP110	F	E	TP	TP	R	
RP111	F	F	TP	TP	R	
RP112	F	E	TP	TP	R	90 DEG.
RP113	F	F	TP	TP	R	90 DEG.
RP114	E	F	TP	TP	R	90 DEG.
RP115	E	F	TP	TP	R	90 DEG.
RP116	F	F	TP	TP	R	
RP117	E	F	TP	HPD	R	
RP118	F	E	HPD	TP	R	
RP119	F	F	TP	TP	R	
RP120	F	E	TP	TP	R	
RP121	F	F	TP	TP	R	
RP122	F	E	TP	TP	R	
RP123	F	F	TP	TP	R	
RP124	F	E	TP	GP11	R	
RP125	F	F	GP11	TP	R	
RP126	F	E	TP	TP	R	
RP127	F	F	TP	TP	R	
RP128	F	E	TP	HPD	R	
RP129	F	F	HPD	TP	R	
RP130	F	E	TP	TP	R	
RP131	F	F	TP	TP	R	
RP132	F	E	TP	HPC	R	
RP133	F	F	HPC	TP	R	
RP134	F	E	TP	TP	R	
RP135	F	F	TP	TP	R	
RP136	F	FLAG	TP	FLAG	R	VIEW B, PR07
RP137	FLAG	F	FLAG	TP	R	VIEW B, PR07
RP138	F	F	TP	TP	R	
RP139	E	F	TP	HPC	R	
RP140	F	F	HPC	TP	R	

POST	CONNECTION BACK STATION	CONNECTION UP STATION	PANEL BACK STATION	PANEL UP STATION	PICKET ORIENT.	COMMENT
RP141	E	F	TP	HPD	R	
RP142	F	F	HPD	HPC	R	
RP143	E	F	HPC	TP	R	
RP144	F	F	TP	TP	R	
RP145	E	F	TP	GP7	R	
RP146	F	F	GP7	TP	R	
RP147	E	F	TP	TP	R	
RP148	F	F	TP	GP2	R	
RP149	E	F	GP2	TP	R	
RP150	F	F	TP	HPD	R	
RP151	E	F	HPD	HPC	R	
RP152	F	F	HPC	TP	R	
RP153	E	F	TP	TP	R	
RP154	F	F	TP	TP	R	
RP155	E	F	TP	GP13	R	
RP156	F	F	GP13	TP	R	
RP157	E	F	TP	HPC	R	
RP158	F	F	HPC	TP	R	
RP159	E	F	TP	HPD	R	
RP160	F	F	HPD	TP	R	
RP161	E	F	TP	HPD	R	
RP162	F	F	HPD	HPC	R	
RP163	E	F	HPC	TP	R	
RP164	F	F	TP	HPD	R	
RP165	E	F	HPD	TP	R	
RP166	F	F	TP	TP	R	
RP167	E	F	TP	GP1	R	
RP168	F	F	GP1	TP	R	
RP169	E	F	TP	TP	R	
RP170	F	F	TP	TP	R	
RP171	F	END	TP	N/A	R	END POST

LEGEND

E – EXPANSION CONNECTION (SEE THIS SHEET)
F – FIXED CONNECTION (SEE THIS SHEET)
N/A – NO PANEL (SEE END CONNECTION THIS SHEET)
FLAG – CANTILEVERED PANEL (SEE FLAG CONNECTION THIS SHEET)
TP – TYPICAL PANEL (SEE THIS SHEET)
HPX – HISTORICAL PANEL "X" (SEE SHEET PR11)
GPXX – GEAR PANEL "XX" (SEE SHEET PR13 – PR15)
L – LEFT (SEE SHEET PR08)
R – RIGHT (SEE SHEET PR08)

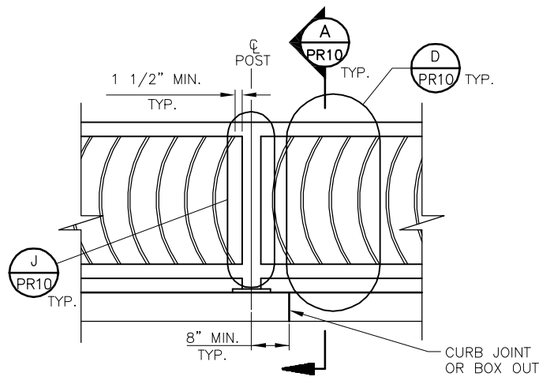

TYPICAL RAILING PANEL

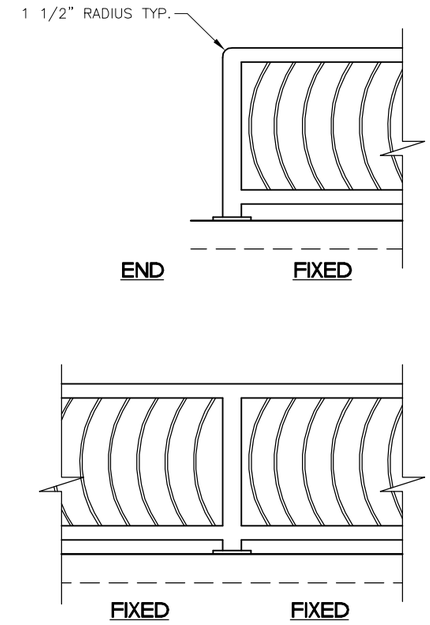

RAILING PANEL CONNECTIONS

FIELD BOOK:		
SURVEYED:		
SURVEY BASE MAP:		
DESIGN ENTERED:	S. COUTURE	09/2009
DESIGNED	T. MCAULIFFE	10/2009
CHECKED:	M. GIESMANN	10/2009
SUPERVISOR:	R. JOHNSON	01/2010

NUM.	REVISION	BY	DATE

DAVID FRANK McCURRY JR. STATE OF WASHINGTON 18472 REGISTERED PROFESSIONAL ENGINEER

HNTB

FED. AID No.
PROJECT No. 300197
SURVEY No. 32-24-4-22
MAINTENANCE DIVISION No. 3

Barbara Grygutis Sculpture LLC

KING COUNTY DEPT. OF TRANSPORTATION
HAROLD TANIGUCHI, DIRECTOR
SOUTH PARK BRIDGE #3179 REPLACEMENT
PEDESTRIAN RAILING
TABLE AND DETAILS – 2

King County

PR09
SHEET 540 OF 667 SHEETS
316-63 (____)

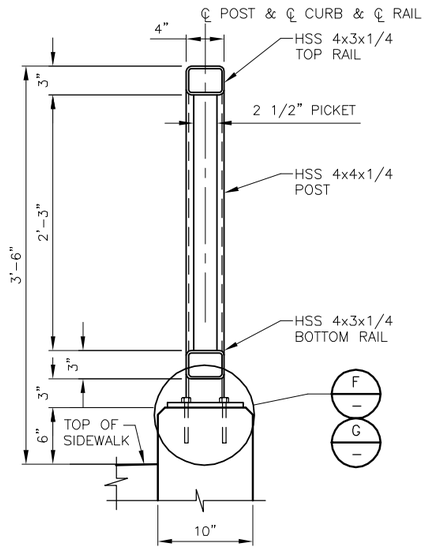

TYPICAL RAILING

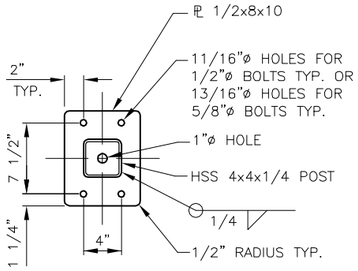

BASE PLATE

DETAIL B

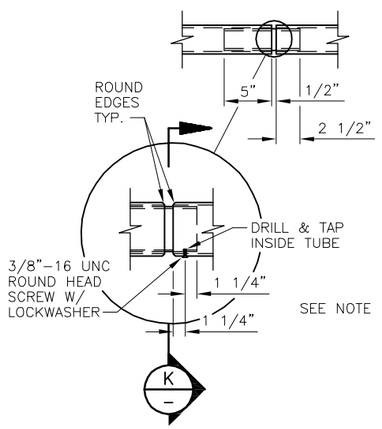

RAILING SLEEVE

DETAIL C SCALE: NTS — PR09 — PR13, PR14, PR15

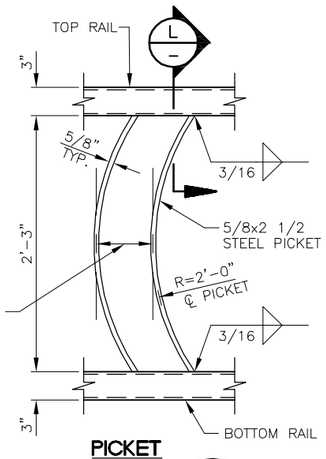

PICKET

DETAIL D SCALE: NTS — PR09 — PR11, PR13, PR14, PR15

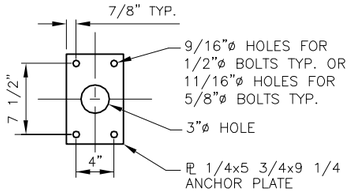

ANCHOR PLATE

DETAIL E

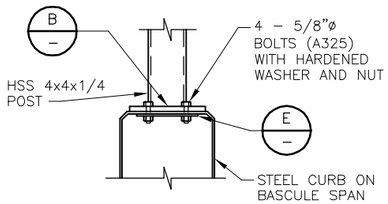

ANCHORAGE TO STEEL

DETAIL F

NOTES:

1. PICKET SPACING BETWEEN POSTS SHALL BE EQUAL WITH A MAXIMUM PICKET SPACING OF 6 INCHES.

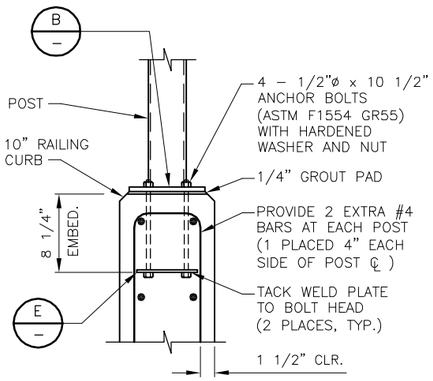

ANCHORAGE TO CONCRETE

DETAIL G

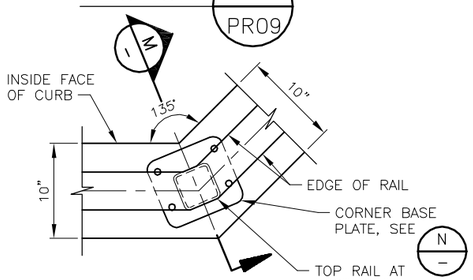

DETAIL H — PR07

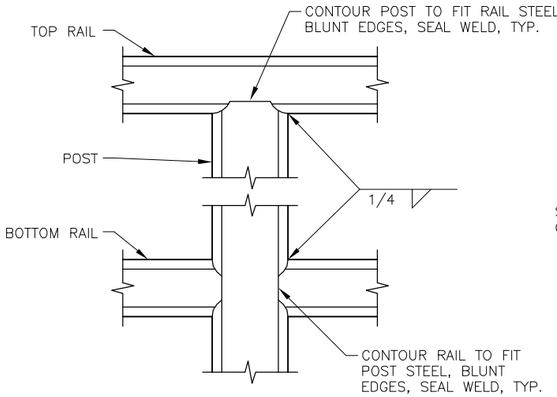

RAIL TO POST WELD

DETAIL J — PR09

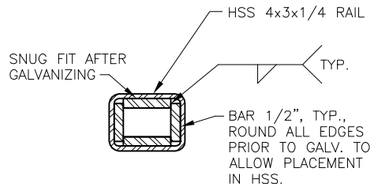

SECTION K

PICKET WELD

SECTION L

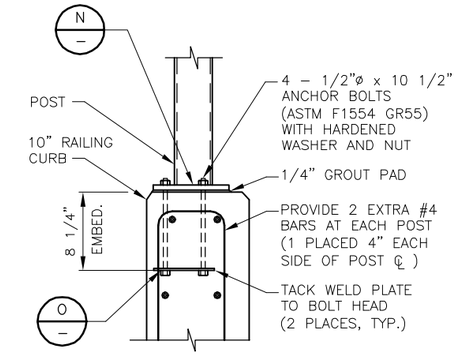

SECTION M

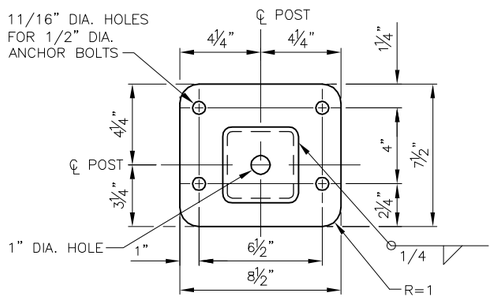

CORNER BASE PLATE

DETAIL N

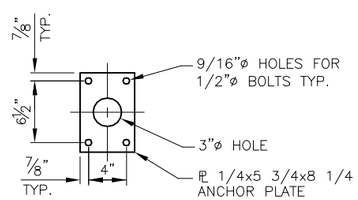

ANCHOR PLATE

DETAIL O

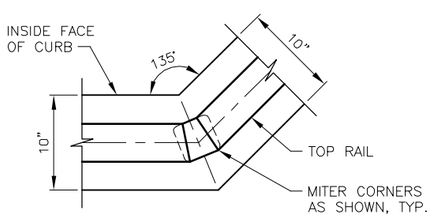

DETAIL P

FIELD BOOK:							
SURVEYED:							
SURVEY BASE MAP:							
DESIGN ENTERED:	S. COUTURE	09/2009					
DESIGNED	T. MCAULIFFE	10/2009					
CHECKED:	M. GIESMANN	10/2009					
SUPERVISOR:	R. JOHNSON	01/2010	NUM.	REVISION	BY	DATE	

DAVID FRANK McCOURT JR. STATE OF WASHINGTON 18478 REGISTERED PROFESSIONAL ENGINEER

HNTB

FED. AID No.

PROJECT No. 300197

SURVEY No. 32-24-4-22

MAINTENANCE DIVISION No. 3

Barbara Grygutis Sculpture LLC

KING COUNTY DEPT. OF TRANSPORTATION
HAROLD TANIGUCHI, DIRECTOR

SOUTH PARK BRIDGE #3179 REPLACEMENT

PEDESTRIAN RAILING
POST CONNECTION DETAILS

King County

PR10

SHEET 541 OF 667 SHEETS

316-63 (___)

NOTES:

HORIZONTAL DIMENSIONS SHOWN ARE BASED ON PLAN LAYOUT AND DO NOT REFLECT ADJUSTMENTS NEEDED FOR THE VERTICAL PROFILE. SEE NOTE 11 ON SHEET PR08.

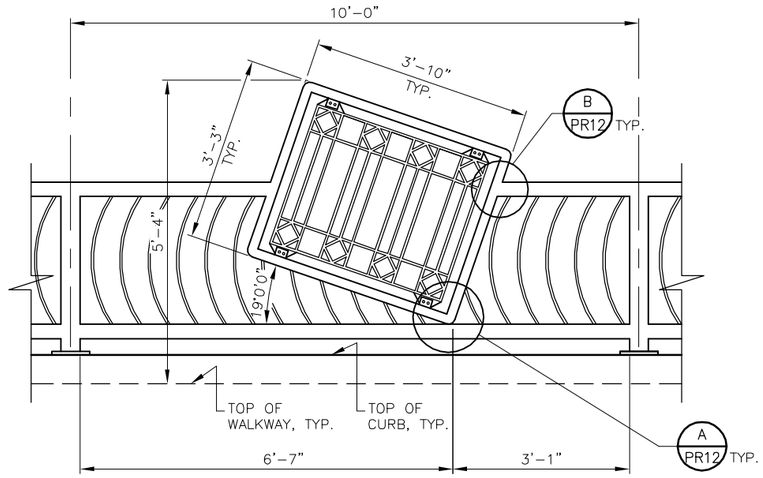

HISTORIC PANEL A (HPA)

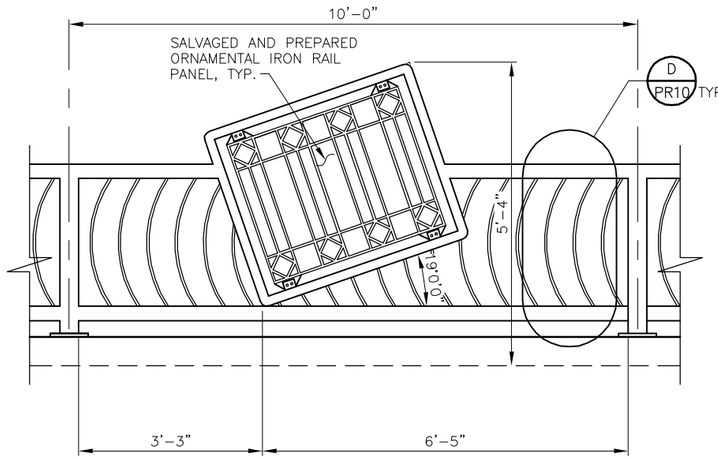

HISTORIC PANEL B (HPB)

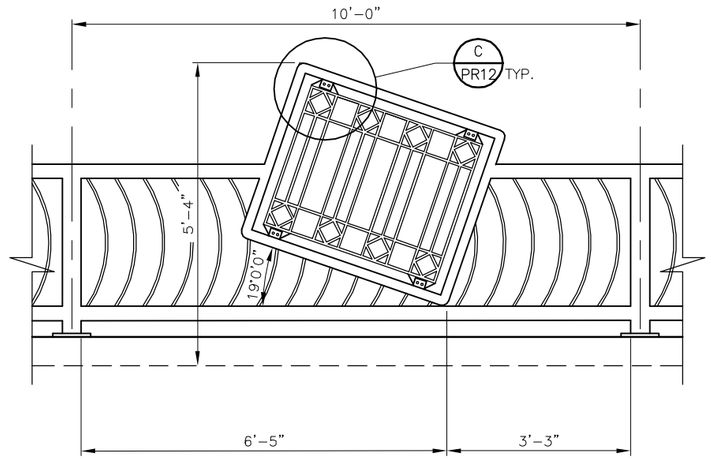

HISTORIC PANEL C (HPC)

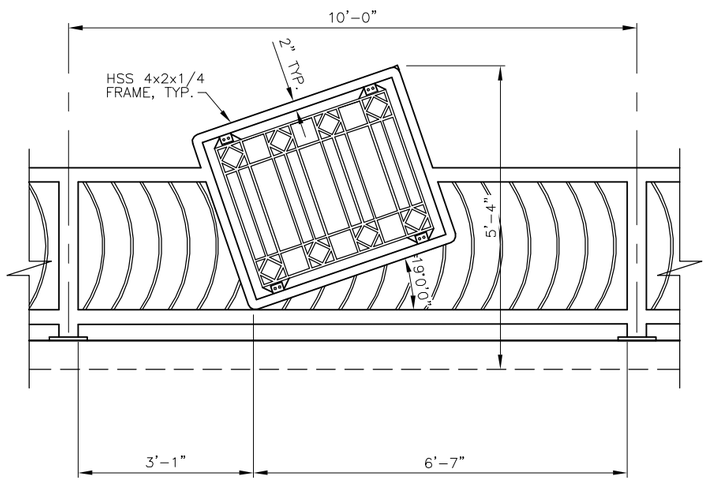

HISTORIC PANEL D (HPD)

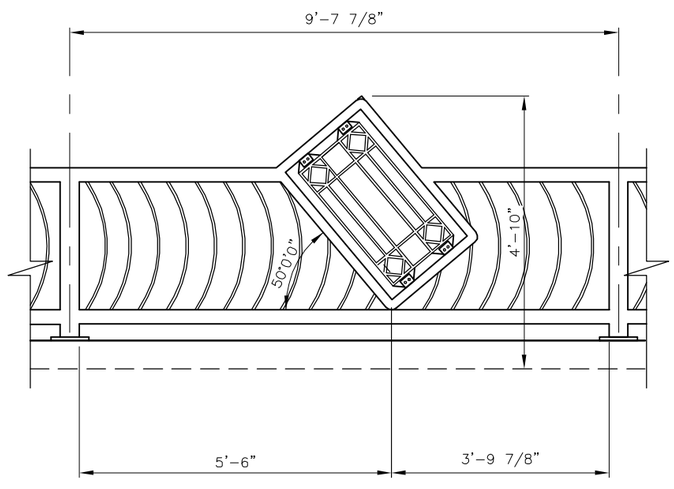

HISTORIC PANEL E (HPE)

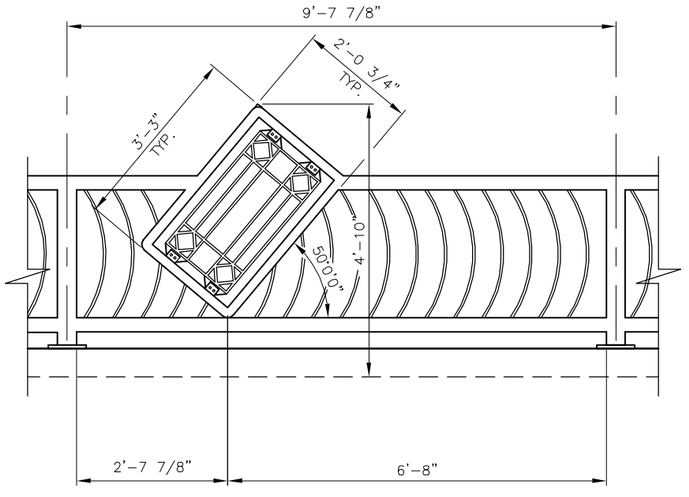

HISTORIC PANEL F (HPF)

FIELD BOOK:					
SURVEYED:					
SURVEY BASE MAP:					
DESIGN ENTERED:	S. COUTURE	09/2009			
DESIGNED	T. MCAULIFFE	10/2009			
CHECKED:	M. GIESMANN	10/2009			
SUPERVISOR:	R. JOHNSON	01/2010	NUM.	REVISION	BY / DATE

DAVID DEANE McCURRY JR. STATE OF WASHINGTON 45472 REGISTERED PROFESSIONAL ENGINEER

HNTB

FED. AID No.

PROJECT No. 300197

SURVEY No. 32-24-4-22

MAINTENANCE DIVISION No. 3

Barbara Grygutis Sculpture LLC

KING COUNTY DEPT. OF TRANSPORTATION
HAROLD TANIGUCHI, DIRECTOR

SOUTH PARK BRIDGE #3179 REPLACEMENT

PEDESTRIAN RAILING
HISTORIC PANEL ELEVATIONS

King County

PR11

SHEET 542 OF 667 SHEETS

316-63 (___)

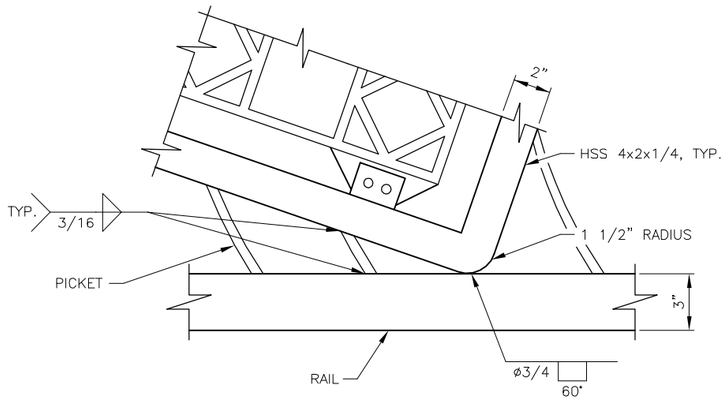

DETAIL A PR11

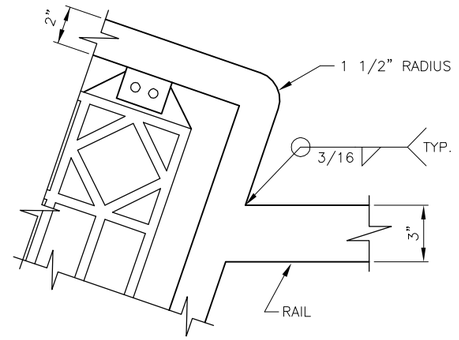

DETAIL B PR11

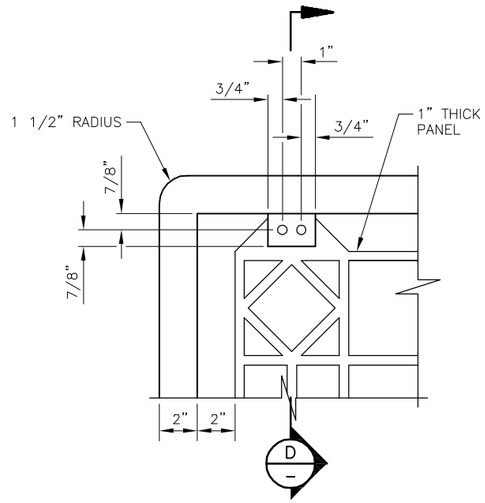

DETAIL C PR11

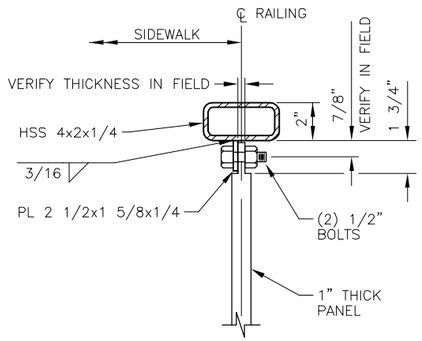

SECTION D –

FIELD BOOK:								
SURVEYED:								
SURVEY BASE MAP:								
DESIGN ENTERED:	S. COUTURE	09/2009						
DESIGNED	T. MCAULIFFE	10/2009						
CHECKED:	M. GIESMANN	10/2009						
SUPERVISOR:	R. JOHNSON	01/2010	NUM.	REVISION	BY	DATE		

DAVID DEANE McCURRY JR. STATE OF WASHINGTON 45472 REGISTERED PROFESSIONAL ENGINEER

HNTB

FED. AID No.

PROJECT No. 300197

SURVEY No. 32-24-4-22

MAINTENANCE DIVISION No. 3

Barbara Grygutis Sculpture LLC

KING COUNTY DEPT. OF TRANSPORTATION
HAROLD TANIGUCHI, DIRECTOR

SOUTH PARK BRIDGE #3179 REPLACEMENT

PEDESTRIAN RAILING
HISTORIC PANEL DETAILS

King County

PR12

SHEET 543 OF 667 SHEETS

316-63 (___)

GEAR	QTY. USED	WEIGHT (LBS.)	WEB TYPE	HUB DIA. (INCHES)	HUB THICKNESS (INCHES)	OUTSIDE DIA. (INCHES)	GEAR FACE WID. (INCHES)	NO. TEETH	GEAR POST
A	3	844	SOLID	10.75	11.875	24.2	11.875	14	2" X-STRONG PIPE
B	3	2334	SPOKES	11.5	12.5	68.7	8.5	70	3.5" X-STRONG PIPE
C	3	267	SOLID	6.75	9	15.3	9	14	2" X-STRONG PIPE
D	3	594	SPOKES	6.75	8.5	38.4	5	46	2.5" X-STRONG PIPE
E	3	117	SOLID	5.5	5.5	12.8	5.5	14	
F	3	228	SPOKES	5	5.5	29.7	3.5	50	2.5" X-STRONG PIPE
G	3	88	SOLID	4.25	4	10.3	4	16	
H	2	399	SPOKES	4.25	6	38.5	4	75	2.5" X-STRONG PIPE
I	2	70	SOLID	3.125	4.5	8.5	4.5	15	
J	4	205	PLATE	4.25	5.5	25	2.5	75	2.5" X-STRONG PIPE
K	6	29	SOLID	1.5	2.5	6.7	2.5	18	
L	2	175	SPOKES	3.125	2.75	18.7	2.75	54	2" X-STRONG PIPE
M	2	38	SOLID	2	3.25	6.7	3.25	18	
N	2	70	SOLID	3.125	4.5	8.5	4.5	15	

NOTES:

1. PANEL ELEVATION SHOWN AS VIEWED FROM EXTERIOR.
2. FOR GEAR MOUNT DETAILS, SEE SHEET PR18.
3. HORIZONTAL DIMENSIONS SHOWN ARE BASED ON PLAN LAYOUT AND DO NOT REFLECT ADJUSTMENTS NEEDED FOR THE VERTICAL PROFILE. SEE NOTE 11 ON SHEET PR08.

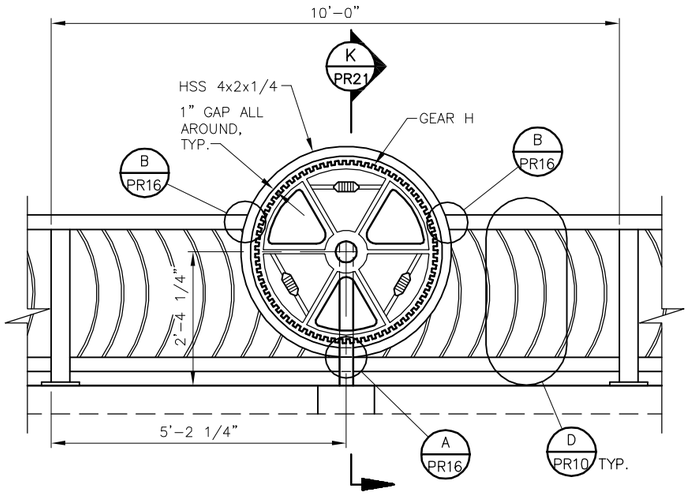

GEAR PANEL 1 - GEAR H

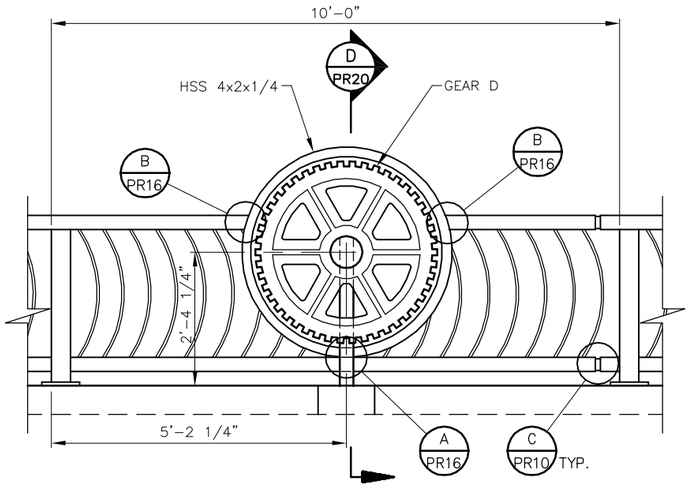

GEAR PANEL 2 - GEAR D

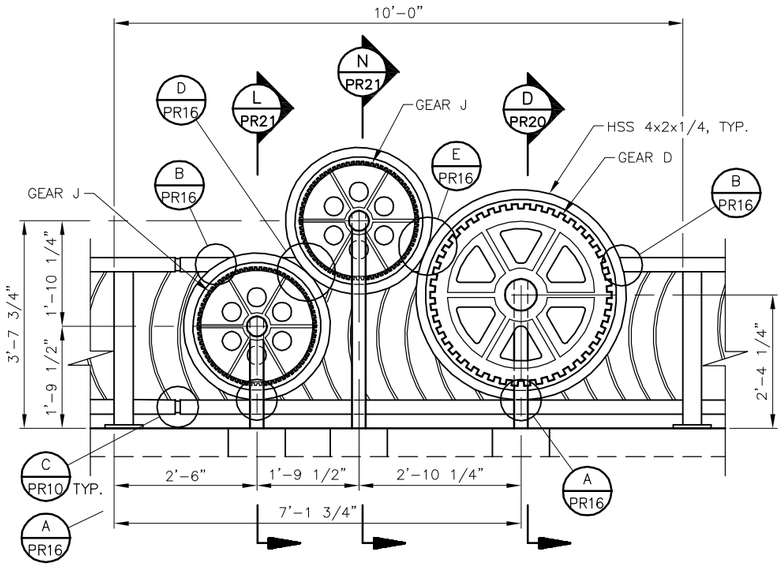

GEAR PANEL 3 - GEARS J, J, AND D

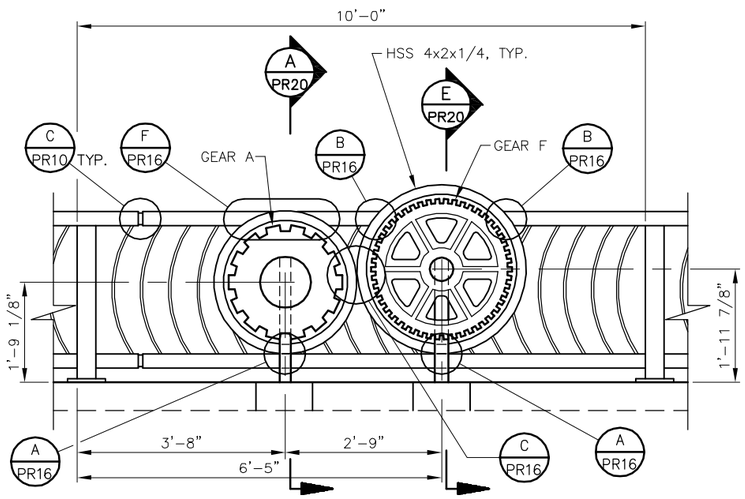

GEAR PANEL 4 - GEARS A AND F

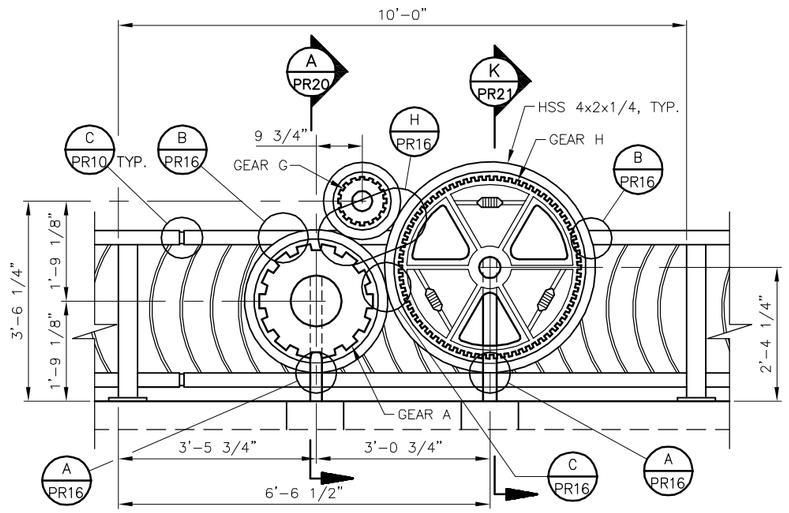

GEAR PANEL 5 - GEARS A, G, AND H

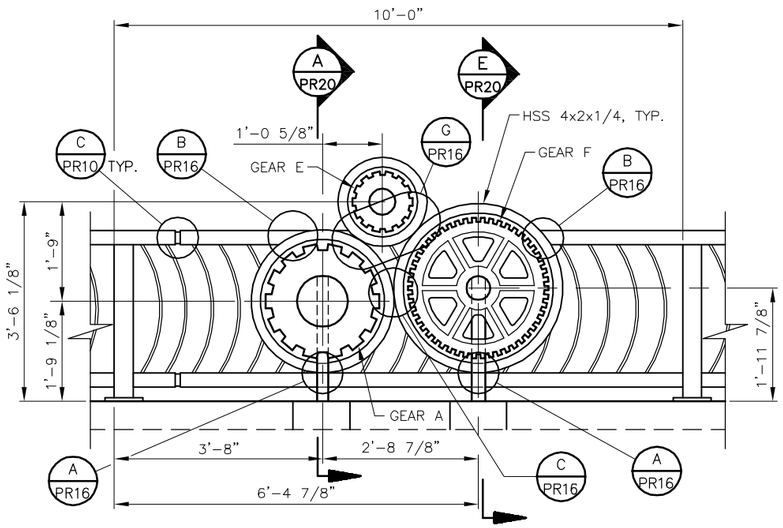

GEAR PANEL 6 - GEARS A, E, AND F

FIELD BOOK:				
SURVEYED:				
SURVEY BASE MAP:				
DESIGN ENTERED:	S. COUTURE	09/2009		
DESIGNED	T. MCAULIFFE	10/2009		
CHECKED:	M. GIESMANN	10/2009		
SUPERVISOR:	R. JOHNSON	01/2010		
			NUM.	REVISION

DAVID DEANE MCCURRY JR. STATE OF WASHINGTON 45478 REGISTERED PROFESSIONAL ENGINEER

HNTB

FED. AID No.

PROJECT No. 300197

SURVEY No. 32-24-4-22

MAINTENANCE DIVISION No. 3

Barbara Grygutis Sculpture LLC

KING COUNTY DEPT. OF TRANSPORTATION
HAROLD TANIGUCHI, DIRECTOR

SOUTH PARK BRIDGE #3179 REPLACEMENT

PEDESTRIAN RAILING
GEAR PANEL ELEVATIONS – 1

King County

PR13

SHEET 544 OF 667 SHEETS

316-63 (____)

NOTES:

1. FOR GEAR INFORMATION SEE TABLE SHEET PR13.
2. FOR NOTES SEE SHEET PR13.

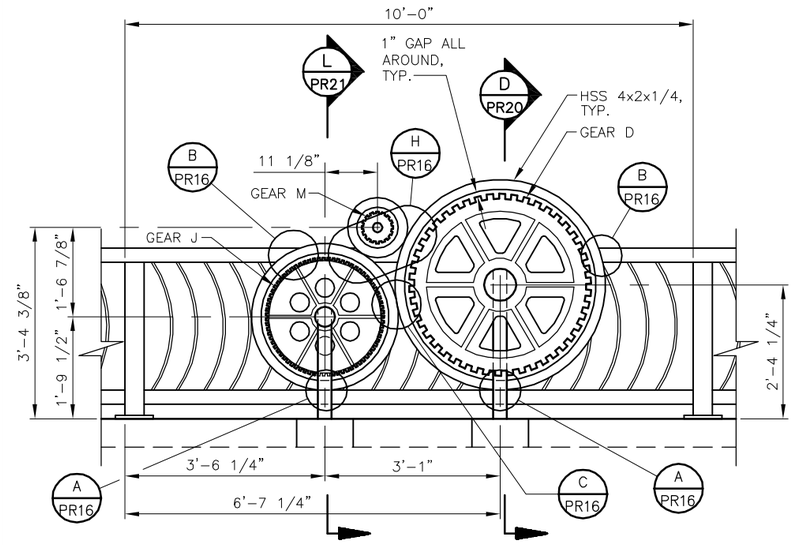

GEAR PANEL 7 - GEARS J, M, AND D

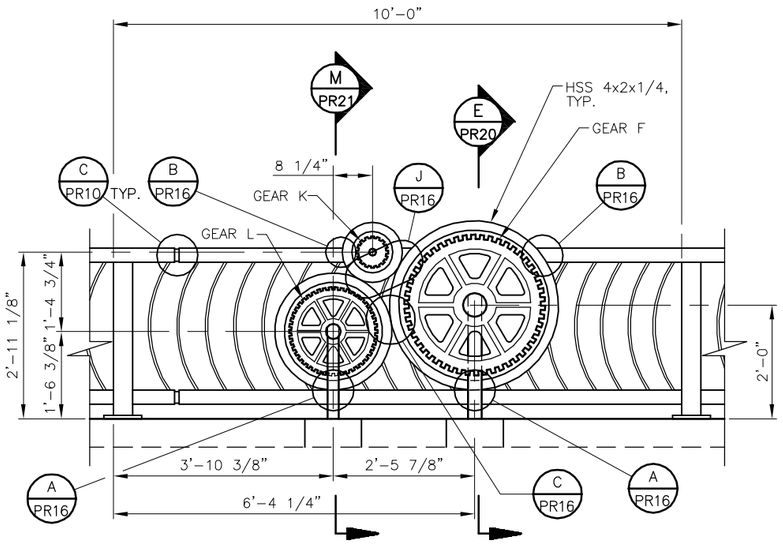

GEAR PANEL 8 - GEARS L, K, AND F

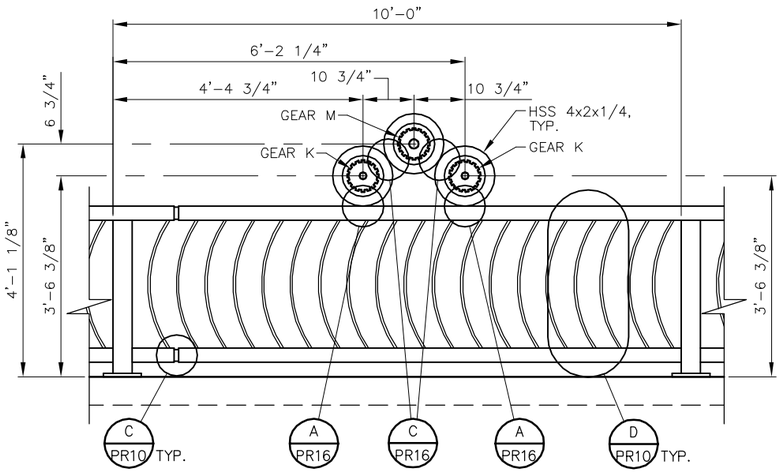

GEAR PANEL 9 - GEARS K, M, AND K

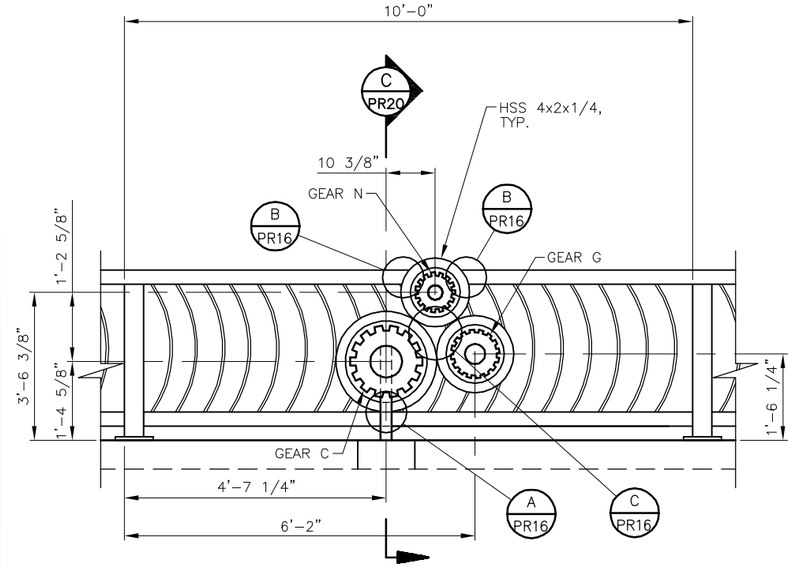

GEAR PANEL 10 - GEARS C, N, AND G

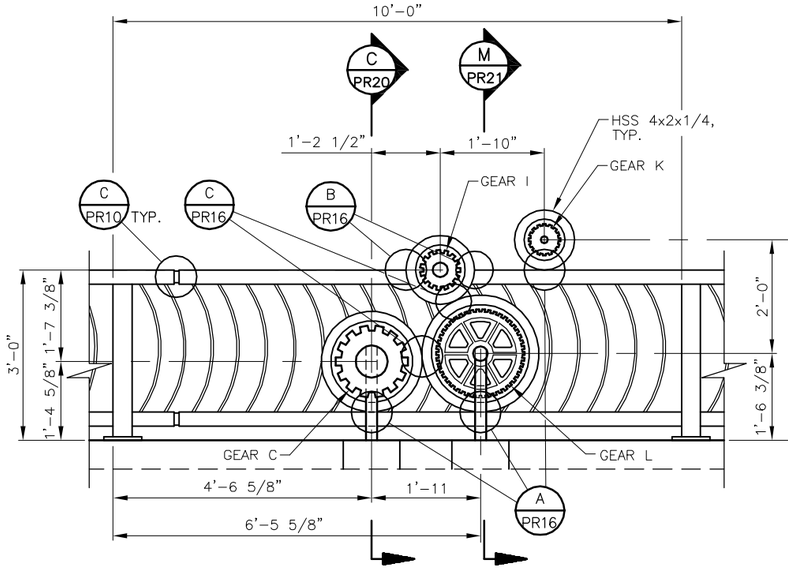

GEAR PANEL 11 - GEARS C, I, L, AND K

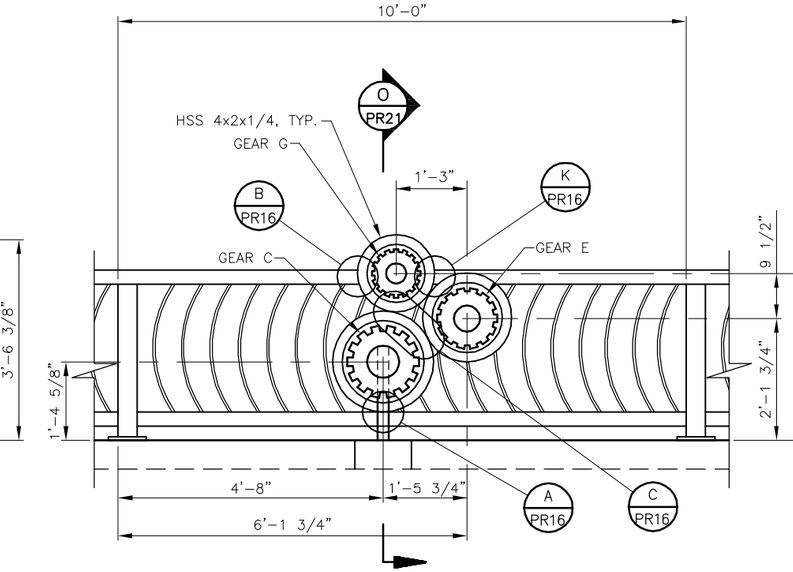

GEAR PANEL 12 - GEARS C, G, AND E

FIELD BOOK:					
SURVEYED:					
SURVEY BASE MAP:					
DESIGN ENTERED:	S. COUTURE	09/2009			
DESIGNED	T. MCAULIFFE	10/2009			
CHECKED:	M. GIESMANN	10/2009			
SUPERVISOR:	R. JOHNSON	01/2010	NUM.	REVISION	BY / DATE

DAVID DEANE McCURDY JR. STATE OF WASHINGTON 25472 REGISTERED PROFESSIONAL ENGINEER

HNTB

FED. AID No.

PROJECT No. 300197

SURVEY No. 32-24-4-22

MAINTENANCE DIVISION No. 3

Barbara Grygutis Sculpture LLC

KING COUNTY DEPT. OF TRANSPORTATION
HAROLD TANIGUCHI, DIRECTOR

SOUTH PARK BRIDGE #3179 REPLACEMENT

PEDESTRIAN RAILING
GEAR PANEL ELEVATIONS – 2

King County

PR14

SHEET 545 OF 667 SHEETS

316-63 (___)

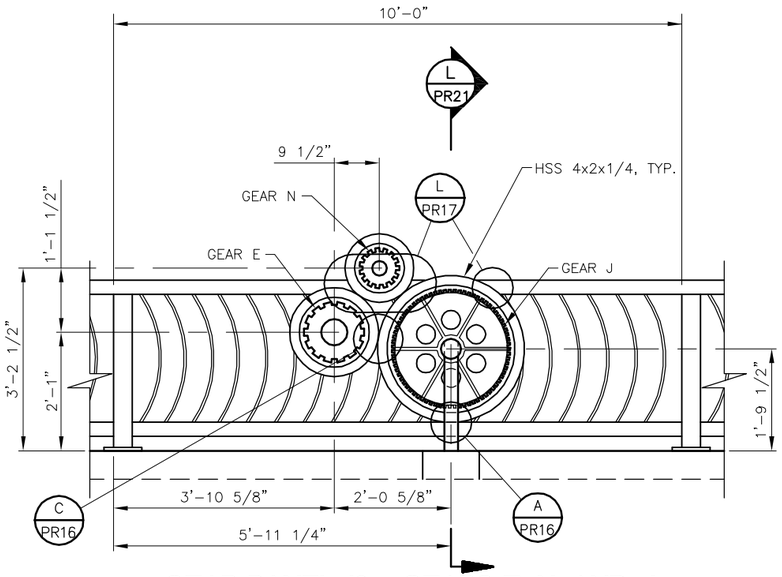

GEAR PANEL 13 - GEARS E, N, AND J

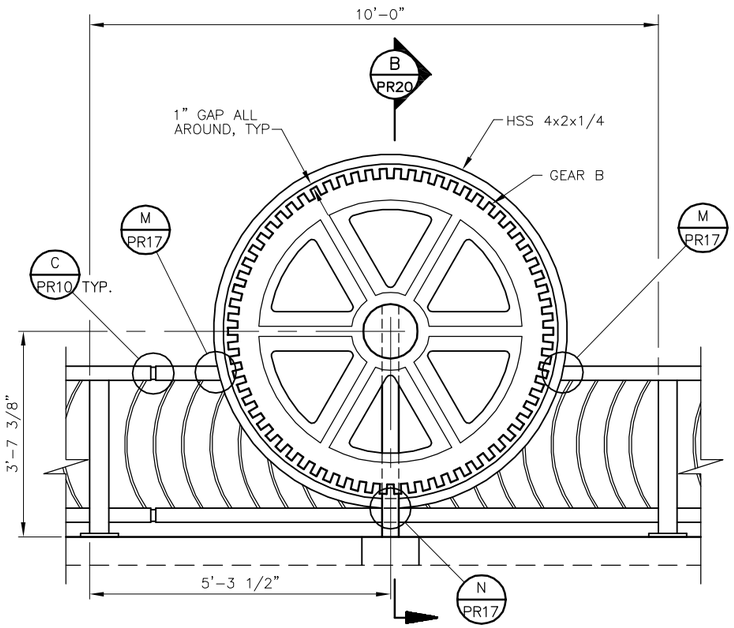

GEAR PANEL 14 AND 16 - GEAR B

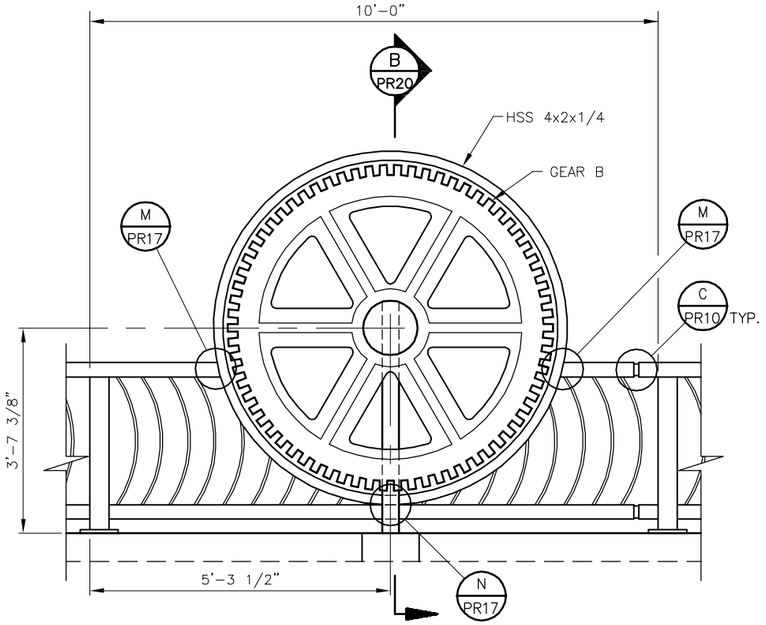

GEAR PANEL 15 - GEAR B

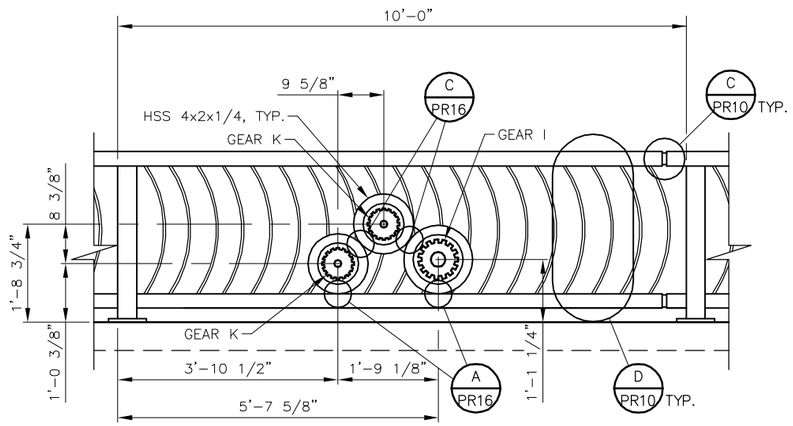

GEAR PANEL 17 - GEARS K, K, AND I

NOTES:

1. FOR GEAR INFORMATION SEE TABLE SHEET PR13.
2. FOR NOTES SEE SHEET PR13.

FIELD BOOK:					
SURVEYED:					
SURVEY BASE MAP:					
DESIGN ENTERED:	S. COUTURE	09/2009			
DESIGNED	T. MCAULIFFE	10/2009			
CHECKED:	M. GIESMANN	10/2009			
SUPERVISOR:	R. JOHNSON	01/2010	NUM.	REVISION	BY / DATE

DAVID DEANE McCURRY JR. 15472 STATE OF WASHINGTON REGISTERED PROFESSIONAL ENGINEER

HNTB

FED. AID No.

PROJECT No. 300197

SURVEY No. 32-24-4-22

MAINTENANCE DIVISION No. 3

Barbara Grygutis Sculpture LLC

KING COUNTY DEPT. OF TRANSPORTATION
HAROLD TANIGUCHI, DIRECTOR

SOUTH PARK BRIDGE #3179 REPLACEMENT

PEDESTRIAN RAILING
GEAR PANEL ELEVATIONS – 3

King County

PR15

SHEET 546 OF 667 SHEETS

316-63 (___)

NOTE:

1. ① 1/2"DIA. VENT HOLE THRU GEAR FRAME INTO VOID SPACE.

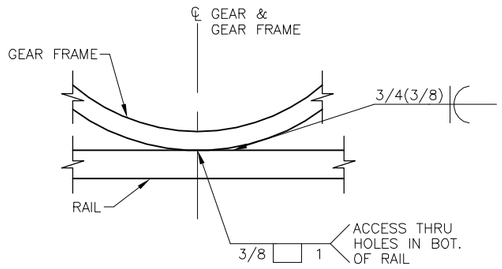

WELD CONNECTION 1

DETAIL A / PR13 PR14, PR15

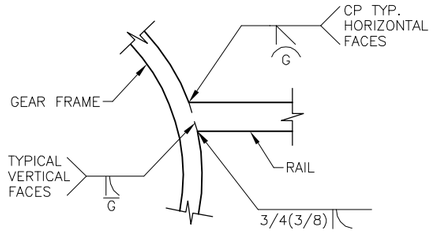

WELD CONNECTION 2

DETAIL B / PR13 PR14

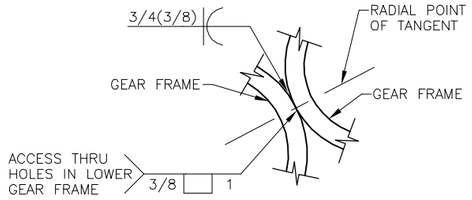

WELD CONNECTION 3

DETAIL C / PR13 PR14, PR15

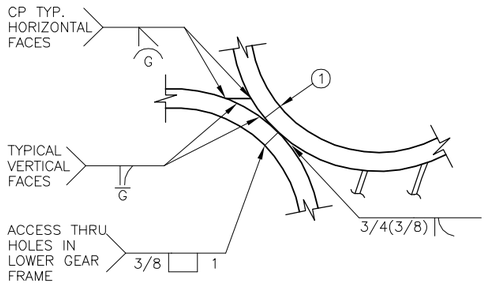

WELD CONNECTION 4

DETAIL D / PR13

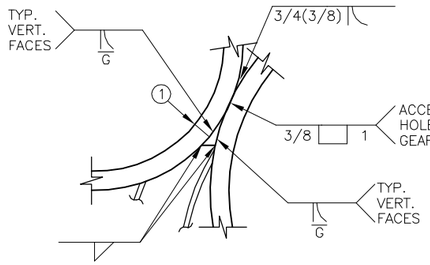

WELD CONNECTION 5

DETAIL E / PR13

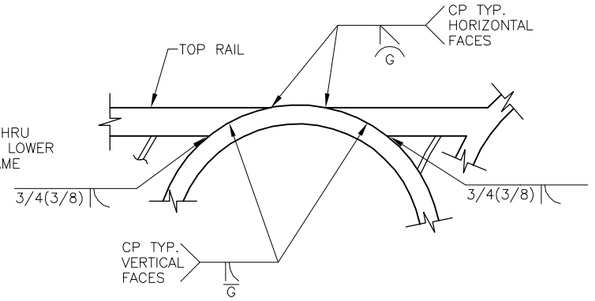

WELD CONNECTION 6

DETAIL F / PR13

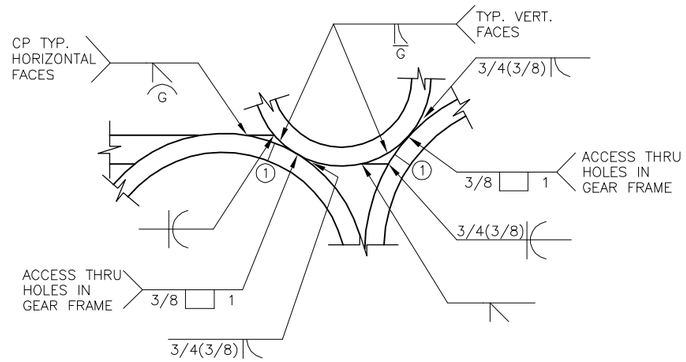

WELD CONNECTION 7

DETAIL G / PR13

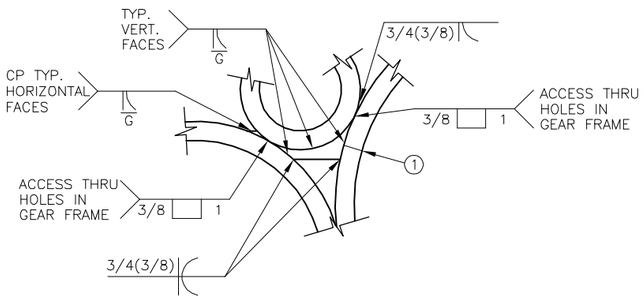

WELD CONNECTION 8

DETAIL H / PR13 PR14

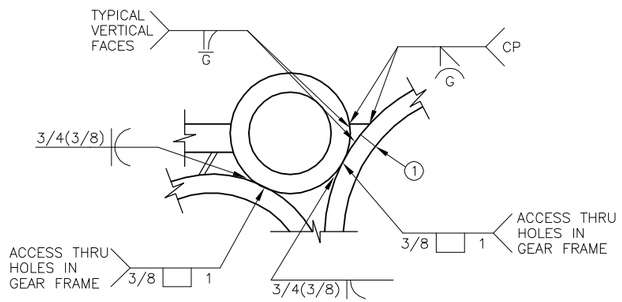

WELD CONNECTION 9

DETAIL J / PR14

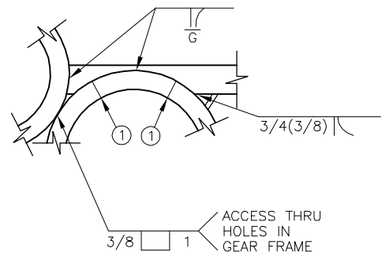

WELD CONNECTION 10

DETAIL K / PR14

FIELD BOOK:					
SURVEYED:					
SURVEY BASE MAP:					
DESIGN ENTERED:	S. COUTURE	09/2009			
DESIGNED	T. MCAULIFFE	10/2009			
CHECKED:	M. GIESMANN	10/2009			
SUPERVISOR:	R. JOHNSON	01/2010	NUM.	REVISION	BY / DATE

DAVID DEANE McCURRY JR. STATE OF WASHINGTON 18478 PROFESSIONAL ENGINEER

HNTB

FED. AID No.

PROJECT No. 300197

SURVEY No. 32-24-4-22

MAINTENANCE DIVISION No. 3

Barbara Grygutis Sculpture LLC

KING COUNTY DEPT. OF TRANSPORTATION
HAROLD TANIGUCHI, DIRECTOR

SOUTH PARK BRIDGE #3179 REPLACEMENT

PEDESTRIAN RAILING
WELD CONNECTION DETAILS – 1

King County

PR16

SHEET 547 OF 667 SHEETS

316-63 (___)

NOTE:

1. (1) 1/2"DIA. VENT HOLE THRU GEAR FRAME INTO VOID SPACE.

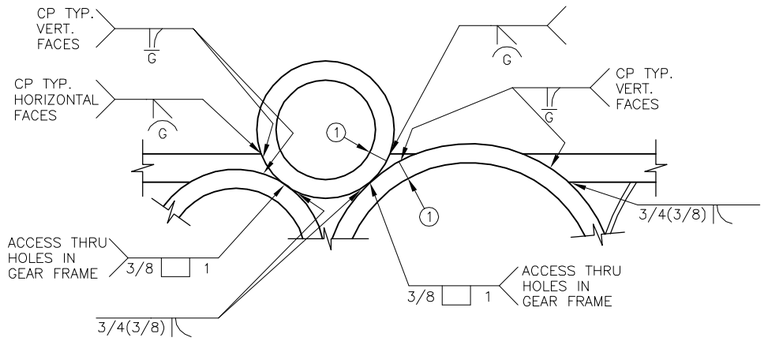

WELD CONNECTION 11

DETAIL L / PR15

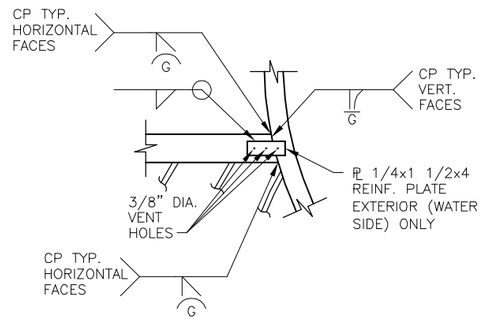

WELD CONNECTION 12

DETAIL M / PR15

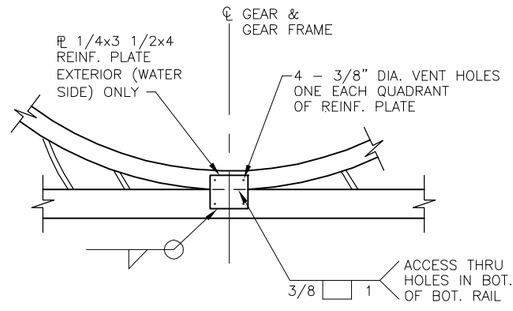

WELD CONNECTION 13

DETAIL N / PR15

FIELD BOOK:					
SURVEYED:					
SURVEY BASE MAP:					
DESIGN ENTERED:	S. COUTURE	09/2009			
DESIGNED	T. MCAULIFFE	10/2009			
CHECKED:	M. GIESMANN	10/2009			
SUPERVISOR:	R. JOHNSON	01/2010	NUM.	REVISION	BY / DATE

DAVID DEANE McCURDY JR. STATE OF WASHINGTON 45472 REGISTERED PROFESSIONAL ENGINEER

HNTB

FED. AID No.

PROJECT No. 300197

SURVEY No. 32-24-4-22

MAINTENANCE DIVISION No. 3

Barbara Grygutis Sculpture LLC

KING COUNTY DEPT. OF TRANSPORTATION
HAROLD TANIGUCHI, DIRECTOR

SOUTH PARK BRIDGE #3179 REPLACEMENT

PEDESTRIAN RAILING
WELD CONNECTION DETAILS – 2

King County

PR17

SHEET 548 OF 667 SHEETS

316-63 (___)

PANEL	GEAR	GEAR MOUNT TYPE	ANGLE X (DEGREES)	ANGLE Y (DEGREES)
1	H	1	0	---
2	D	1	0	---
3	J	1	0	---
3	J	1	60	---
3	D	1	0	---
4	A	1	0	---
4	F	1	0	---
5	A	1	0	---
5	G	4	15	60
5	H	1	0	---
6	A	1	0	---
6	E	10	0	173
6	F	1	0	---
7	J	1	0	---
7	M	4	15	61
7	D	1	0	---
8	L	1	0	---
8	K	3	45	---
8	F	1	0	---
9	K	2	---	---
9	M	2	---	---
10	C	1	115	---
10	N	5	---	43
10	G	6	---	---
11	C	1	0	---
11	L	1	0	---
11	I	3	86	---
11	K	5	0	120
12	C	1	30	---
12	G	5	---	77
12	E	7	---	---
13	E	8	---	---
13	N	5	---	103
13	J	1	0	---
14	B	1	0	---
15	B	1	0	---
16	B	1	0	---
17	K	9	---	---
17	K	9	---	---
17	I	9	---	---

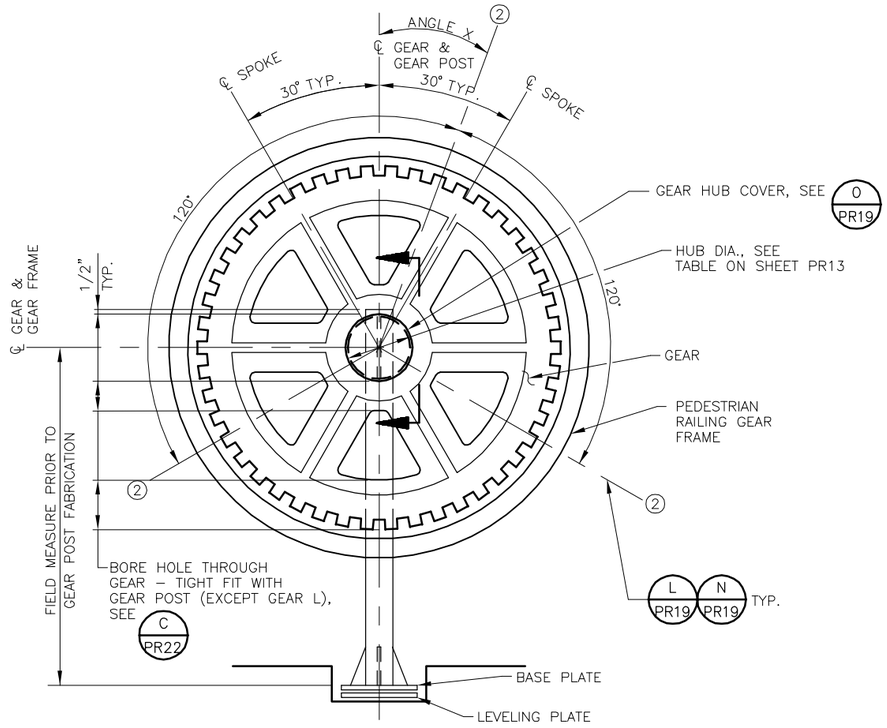

SPOKED GEAR SHOWN, SOLID GEAR SIMILAR

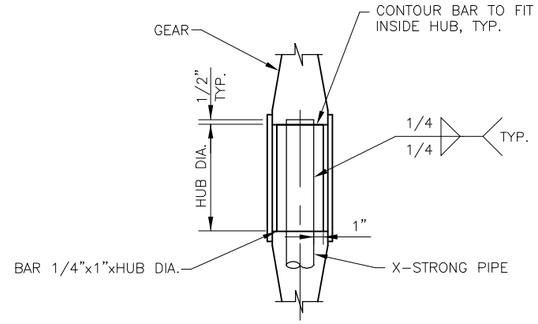

SECTION
(DOES NOT APPLY TO GEAR L)

NOTES:

1. POSITION FACE OF GEARS FLUSH WITH FACE OF GEAR FRAME (SIDEWALK SIDE).
2. ② ℄ BOLT

GEAR MOUNT – TYPE 1

DETAIL A – –

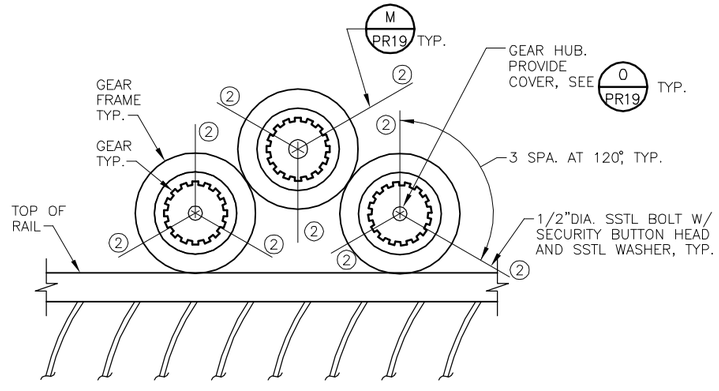

GEAR MOUNT – TYPE 2

DETAIL B – –

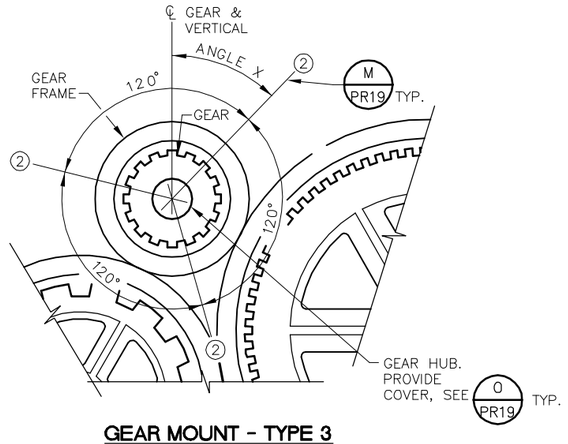

GEAR MOUNT – TYPE 3

DETAIL C – –

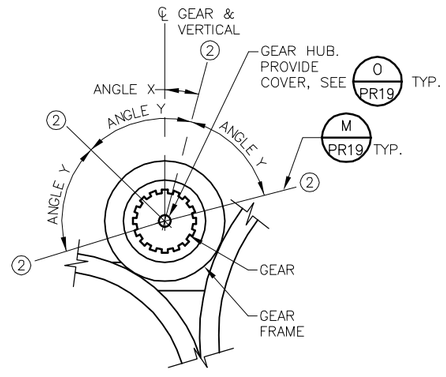

GEAR MOUNT – TYPE 4

DETAIL D – –

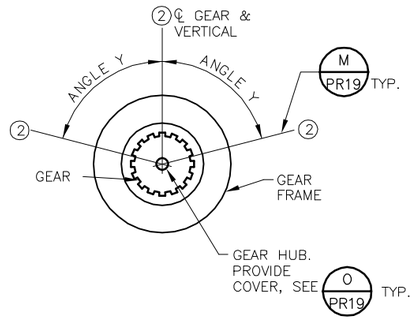

GEAR MOUNT – TYPE 5

DETAIL E – –

FIELD BOOK:			
SURVEYED:			
SURVEY BASE MAP:			
DESIGN ENTERED:	S. COUTURE	09/2009	
DESIGNED	T. MCAULIFFE	10/2009	
CHECKED:	M. GIESMANN	10/2009	
SUPERVISOR:	R. JOHNSON	01/2010	

NUM.	REVISION	BY	DATE

DAVID FRANK McCURRY JR. STATE OF WASHINGTON 45472 REGISTERED PROFESSIONAL ENGINEER

HNTB

FED. AID No. ____

PROJECT No. 300197

SURVEY No. 32-24-4-22

MAINTENANCE DIVISION No. 3

Barbara Grygutis Sculpture LLC

KING COUNTY DEPT. OF TRANSPORTATION
HAROLD TANIGUCHI, DIRECTOR

SOUTH PARK BRIDGE #3179 REPLACEMENT

PEDESTRIAN RAILING
GEAR MOUNTING DETAILS – 1

King County

PR18

SHEET 549 OF 667 SHEETS

316-63 (____)

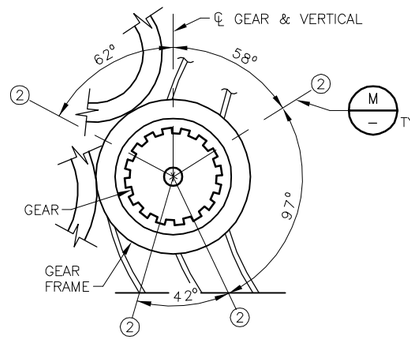

GEAR MOUNT - TYPE 6

DETAIL F

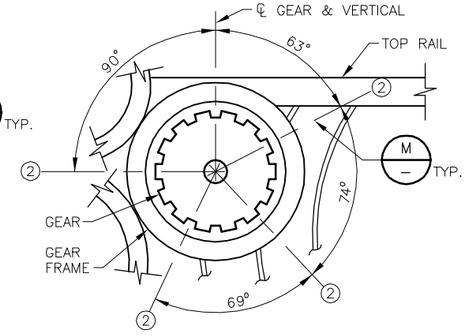

GEAR MOUNT - TYPE 7

DETAIL G

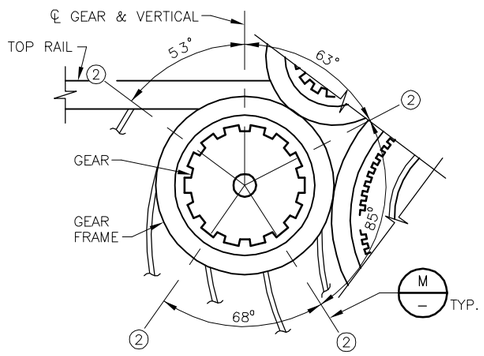

GEAR MOUNT - TYPE 8

DETAIL H

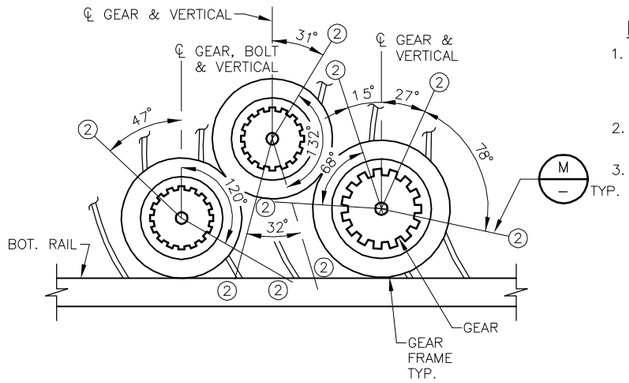

GEAR MOUNT - TYPE 9

DETAIL J

NOTES:

1. ONCE GEAR HAS BEEN TEMPORARILY POSITIONED USING ALL THE BOLTS, REMOVE BOLTS ONE AT A TIME AND APPLY BOLT THREAD ADHESIVE.
2. PROVIDE HUB COVERS FOR ALL EXPOSED GEAR HUBS.
3. ② ℄ BOLTS

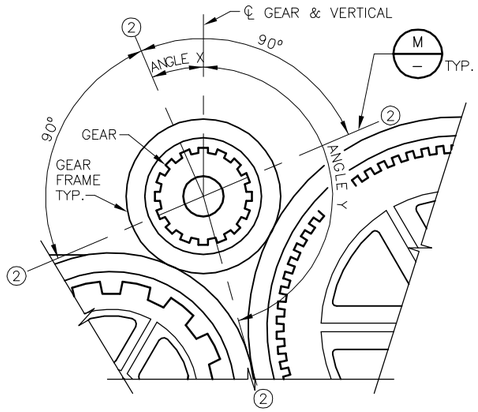

GEAR MOUNT - TYPE 10

DETAIL K

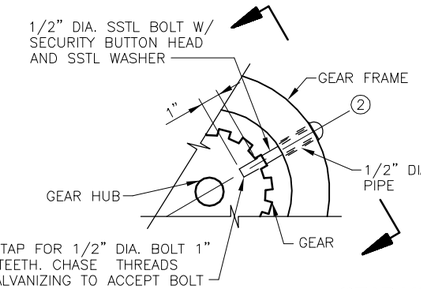

GEAR MOUNT BOLTING 1

(SEE NOTE 1)

DETAIL L PR18

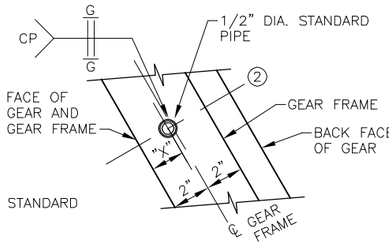

VIEW

GEAR	"X"
A	3"
C	3"
D	3"
F	2 3/4"
H	3"
J	1 1/4"
L	1 3/8"

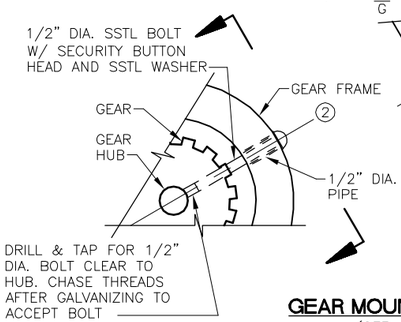

GEAR MOUNT BOLTING 2

(SEE NOTE 1)

DETAIL M PR18

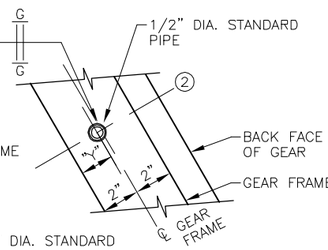

VIEW

GEAR	"Y"
E	2"
G	2"
I	2"
K	1 1/4"
M	1 5/8"
N	2"

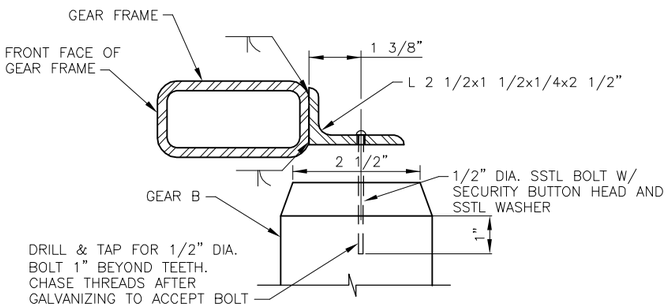

GEAR MOUNT BOLTING 3

(SEE NOTE 1)

DETAIL N PR18

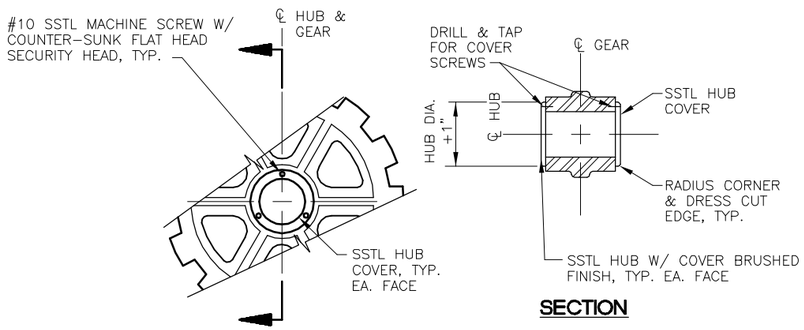

SECTION

GEAR HUB COVER

(SEE NOTE 2)

DETAIL O PR18

FIELD BOOK:					
SURVEYED:					
SURVEY BASE MAP:					
DESIGN ENTERED:	S. COUTURE	09/2009			
DESIGNED	T. MCAULIFFE	10/2009			
CHECKED:	M. GIESMANN	10/2009			
SUPERVISOR:	R. JOHNSON	01/2010	NUM.	REVISION	BY / DATE

DAVID DEANE McCURRY JR. STATE OF WASHINGTON 45472 REGISTERED PROFESSIONAL ENGINEER

HNTB

FED. AID No.

PROJECT No. 300197

SURVEY No. 32-24-4-22

MAINTENANCE DIVISION No. 3

Barbara Grygutis Sculpture LLC

KING COUNTY DEPT. OF TRANSPORTATION

HAROLD TANIGUCHI, DIRECTOR

SOUTH PARK BRIDGE #3179 REPLACEMENT

PEDESTRIAN RAILING

GEAR MOUNTING DETAILS – 2

King County

PR19

SHEET 550 OF 667 SHEETS

316-63 (___)

NOTE:
1" GAP BETWEEN GEAR AND HSS 4x2 GEAR FRAME, TYP.

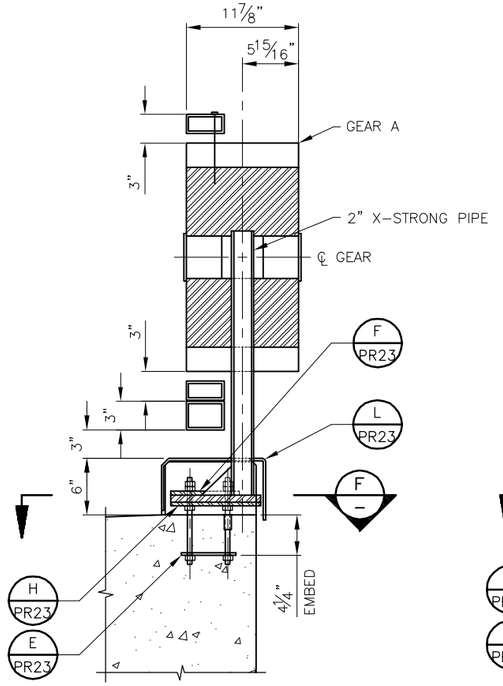

SECTION A — PANELS 4, 5, & 6 — PR13

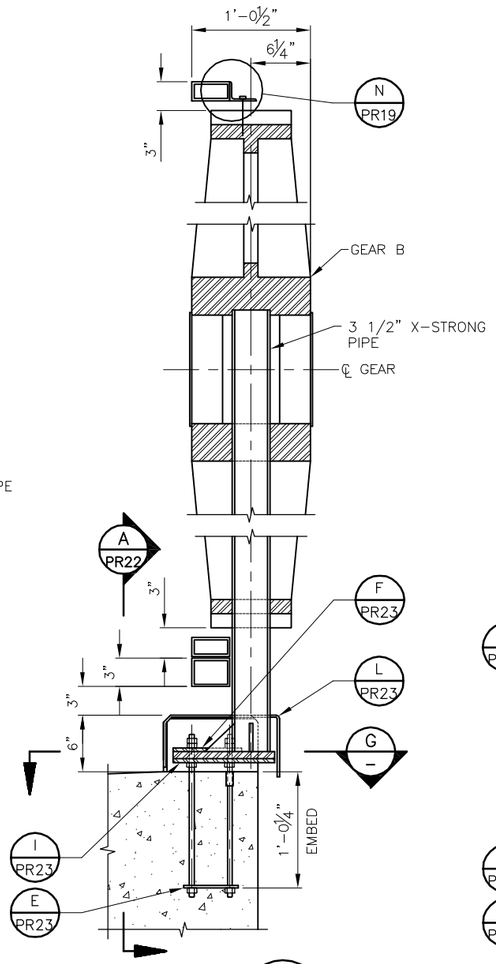

SECTION B — PANELS 14, 15, & 16 — PR15

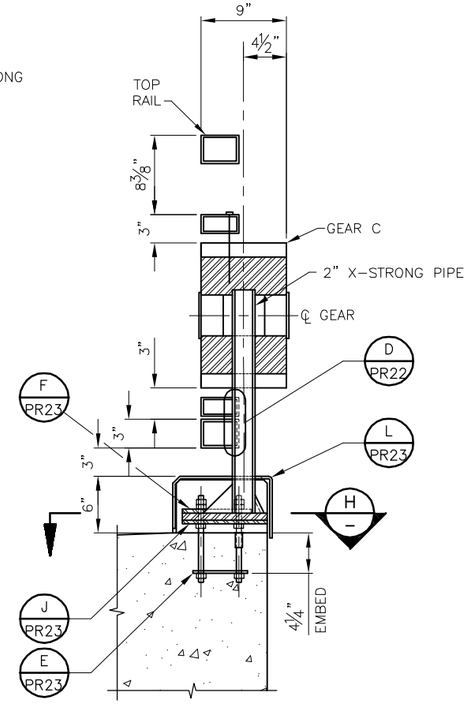

SECTION C — PANELS 10 & 11 — PR14

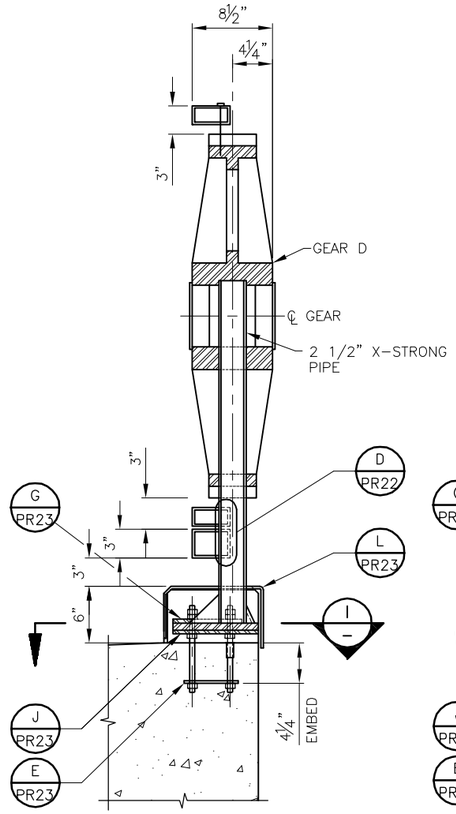

SECTION D — PANELS 2, 3, & 7 — PR13 PR14

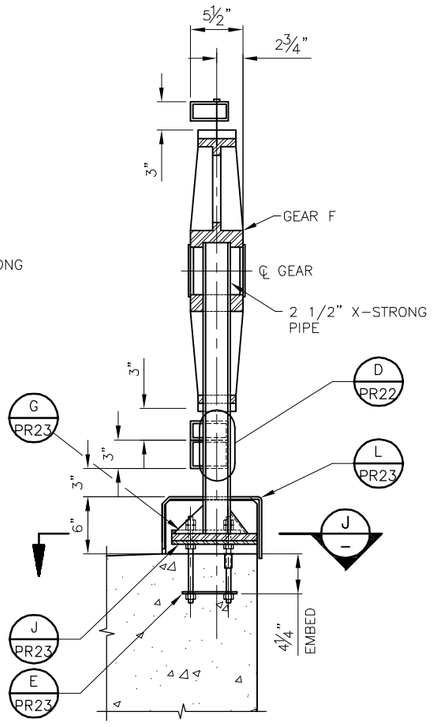

SECTION E — PANELS 4, 6, & 8 — PR13 PR14

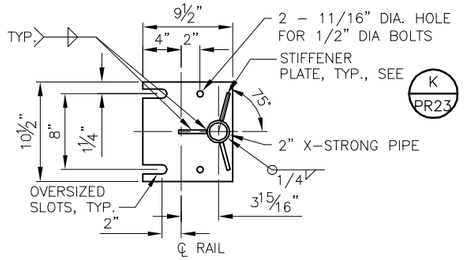

BASE PLATE ONLY
SECTION F –

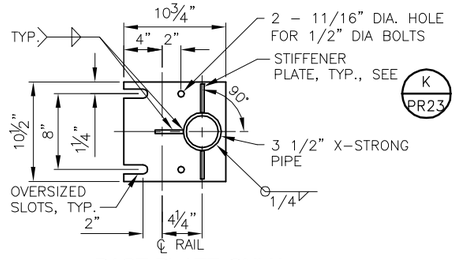

BASE PLATE ONLY
SECTION G –

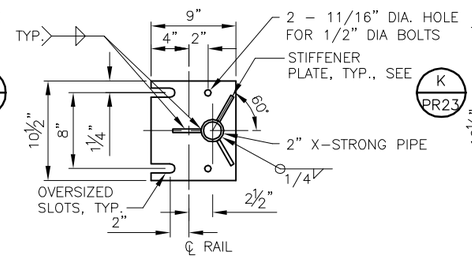

BASE PLATE ONLY
SECTION H –

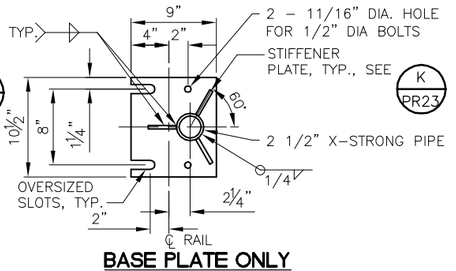

BASE PLATE ONLY
SECTION I –

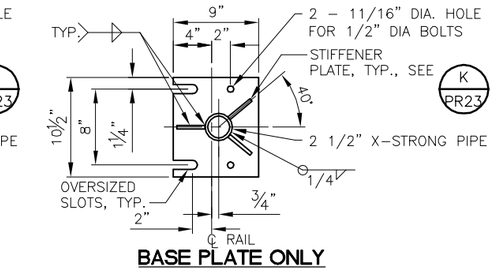

BASE PLATE ONLY
SECTION J –

FIELD BOOK:							
SURVEYED:							
SURVEY BASE MAP:							
DESIGN ENTERED:	S. COUTURE	09/2009					
DESIGNED	T. MCAULIFFE	10/2009					
CHECKED:	M. GIESMANN	10/2009					
SUPERVISOR:	R. JOHNSON	01/2010	NUM.	REVISION	BY	DATE	

DAVID DEANE MCQUARY JR. STATE OF WASHINGTON 38478 REGISTERED PROFESSIONAL ENGINEER

HNTB

FED. AID No.
PROJECT No. 300197
SURVEY No. 32-24-4-22
MAINTENANCE DIVISION No. 3

Barbara Grygutis Sculpture LLC

KING COUNTY DEPT. OF TRANSPORTATION
HAROLD TANIGUCHI, DIRECTOR

SOUTH PARK BRIDGE #3179 REPLACEMENT

PEDESTRIAN RAILING
GEAR MOUNTING SECTIONS – 1

King County

PR20

SHEET 551 OF 667 SHEETS

316-63 (___)

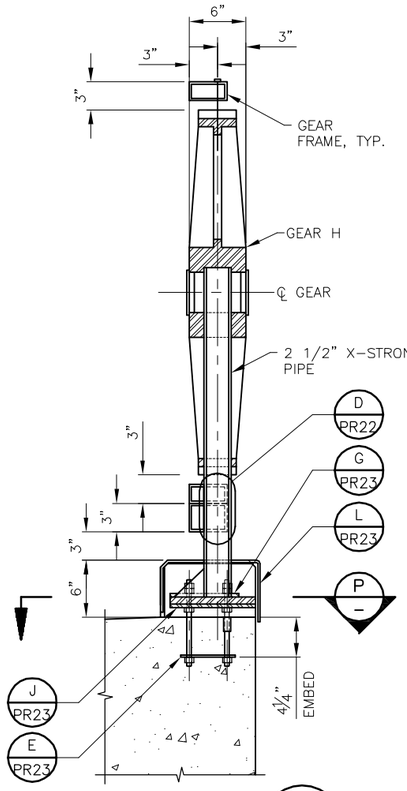

SECTION K PR13
PANELS 1 & 5

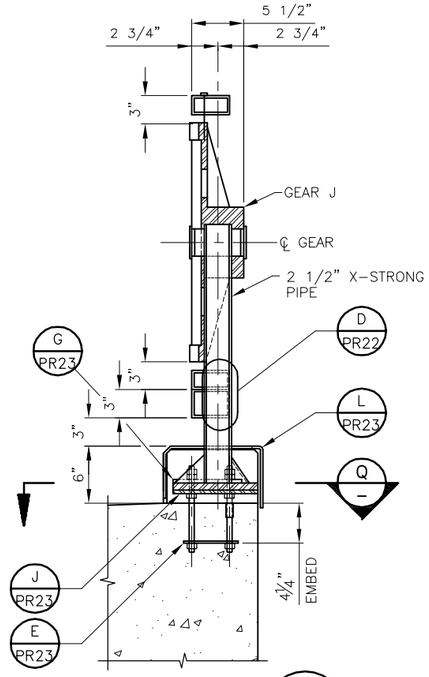

SECTION L PR13 PR14 PR15
PANELS 3, 7, & 13

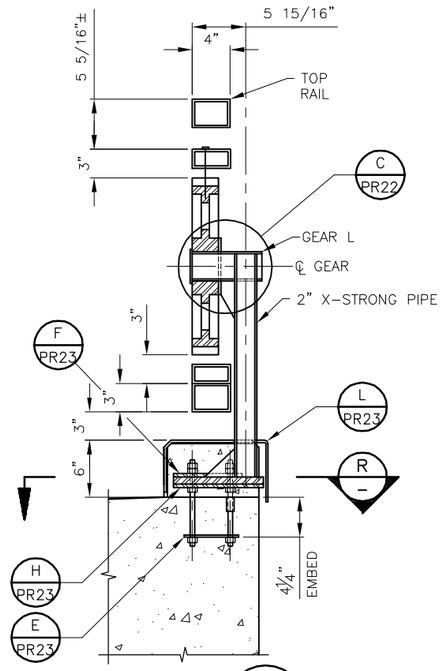

SECTION M PR14
PANELS 8 & 11

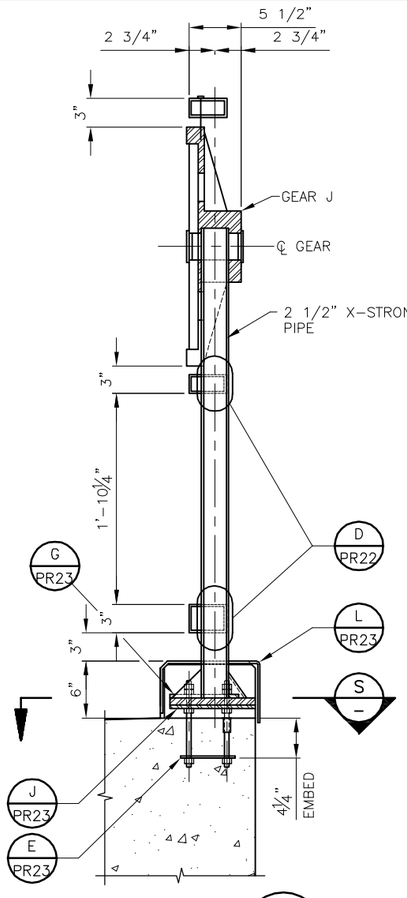

SECTION N PR13
PANEL 3

NOTE:
1" GAP BETWEEN GEAR AND HSS 4x2 GEAR FRAME, TYP.

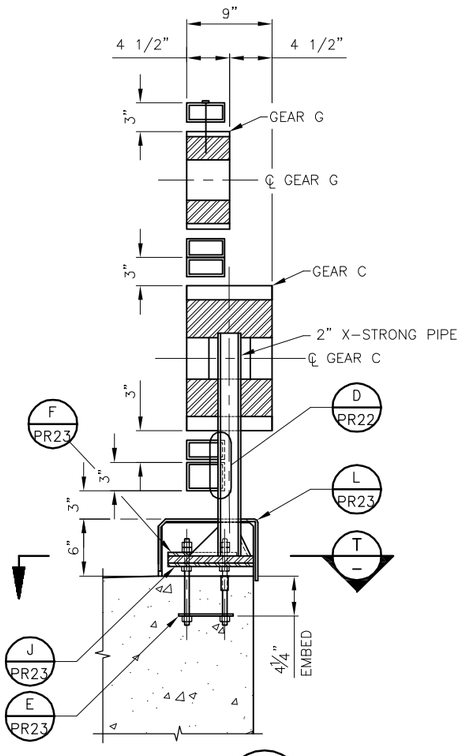

SECTION O PR14
PANEL 12

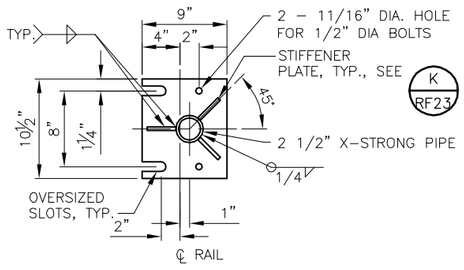

BASE PLATE ONLY
SECTION P –

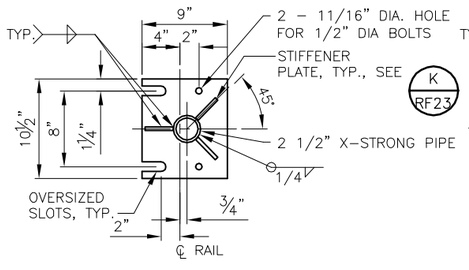

BASE PLATE ONLY
SECTION Q –

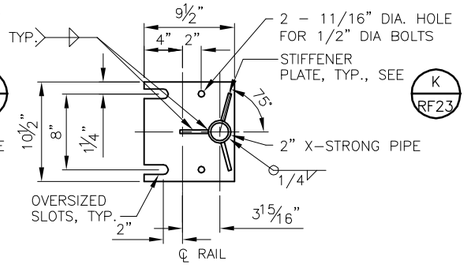

BASE PLATE ONLY
SECTION R –

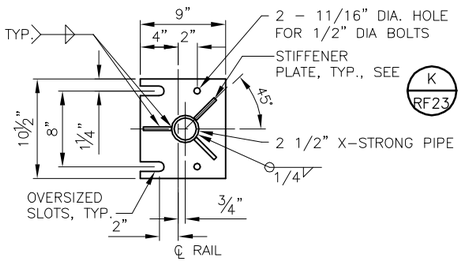

BASE PLATE ONLY
SECTION S –

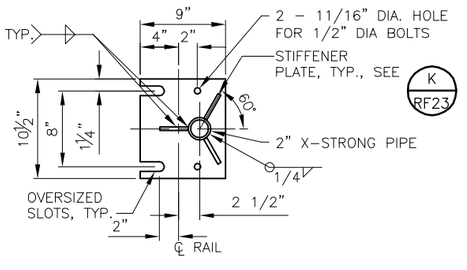

BASE PLATE ONLY
SECTION T –

FIELD BOOK:					
SURVEYED:					
SURVEY BASE MAP:					
DESIGN ENTERED:	S. COUTURE	09/2009			
DESIGNED	T. MCAULIFFE	10/2009			
CHECKED:	M. GIESMANN	10/2009			
SUPERVISOR:	R. JOHNSON	01/2010	NUM.	REVISION	BY / DATE

DAVID DEANE MCCURRY JR. STATE OF WASHINGTON 22478 REGISTERED PROFESSIONAL ENGINEER

HNTB

FED. AID No.
PROJECT No. 300197
SURVEY No. 32-24-4-22
MAINTENANCE DIVISION No. 3

Barbara Grygutis Sculpture LLC

KING COUNTY DEPT. OF TRANSPORTATION
HAROLD TANIGUCHI, DIRECTOR

SOUTH PARK BRIDGE #3179 REPLACEMENT

PEDESTRIAN RAILING
GEAR MOUNTING SECTIONS – 2

King County

PR21

SHEET 552 OF 667 SHEETS

316-63 (___)

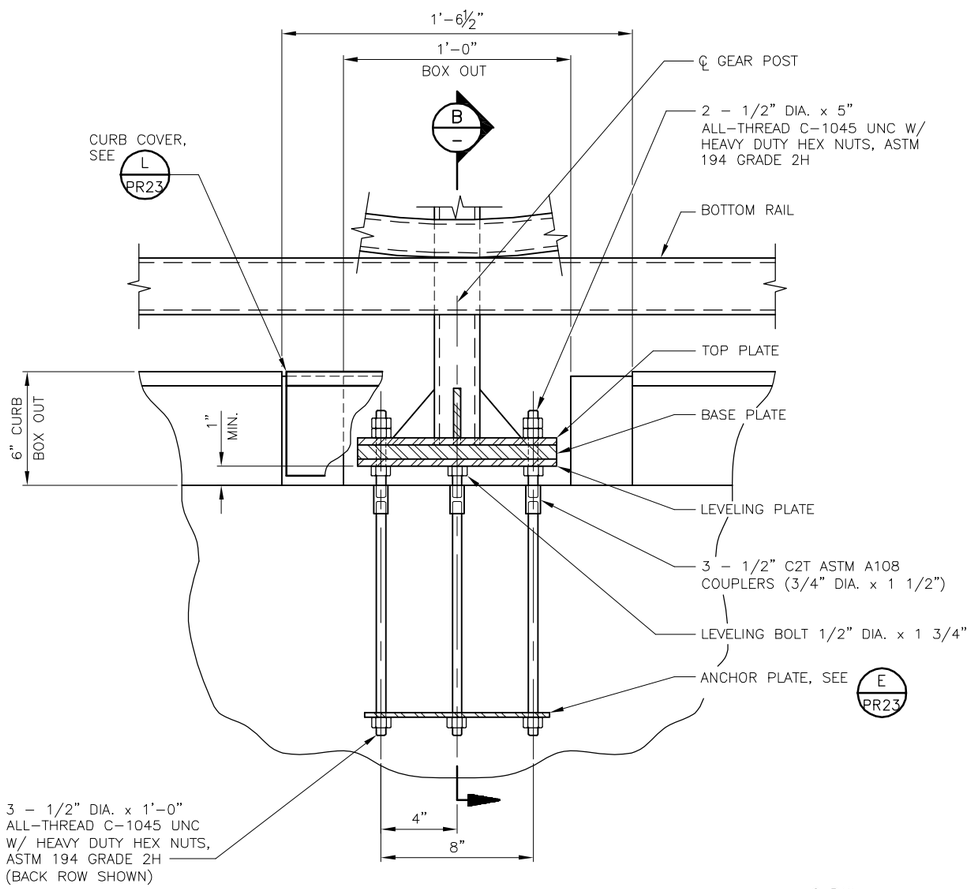

GEAR B SHOWN, OTHER GEARS SIMILAR

SECTION A PR20

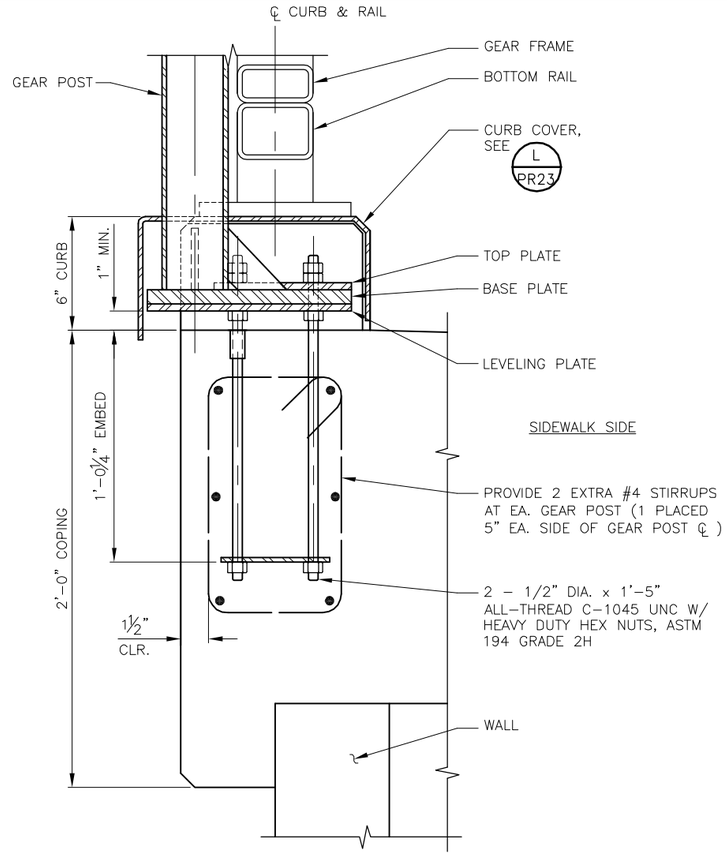

SECTION B –

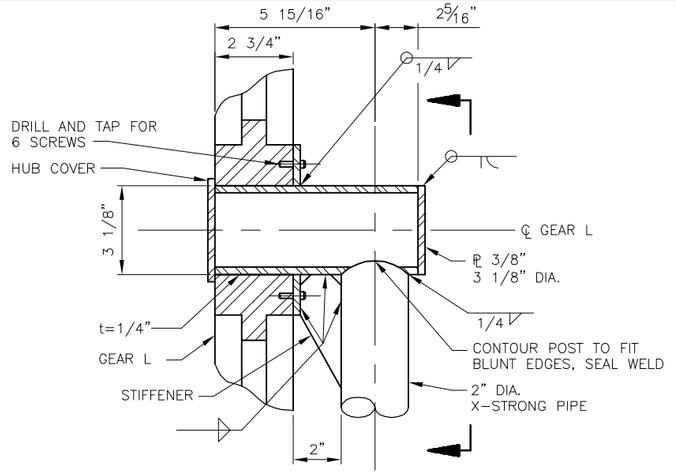

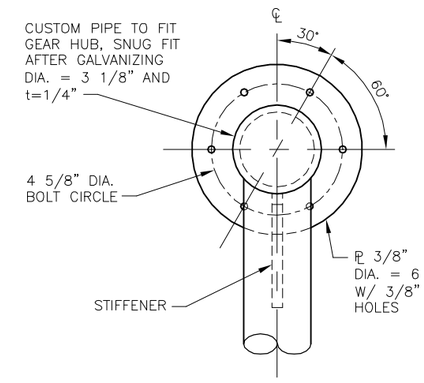

SECTION

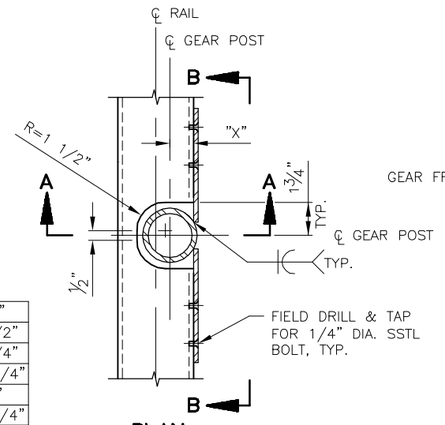

GEAR	"X"
C	–1/2"
D	–1/4"
F	1 1/4"
H	1"
J	1 1/4"

PLAN

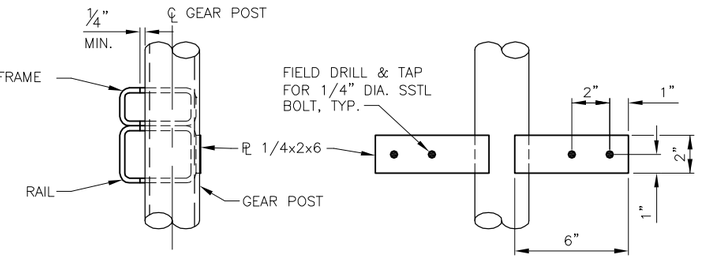

SECTION A-A

VIEW B-B
TAB DETAIL

COPING DETAIL

DETAIL D PR20 PR21

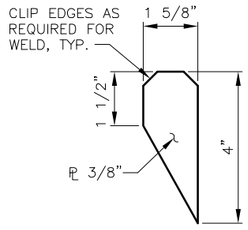

STIFFENER

GEAR L MOUNT

DETAIL C PR21

FIELD BOOK:					
SURVEYED:					
SURVEY BASE MAP:					
DESIGN ENTERED:	S. COUTURE	09/2009			
DESIGNED	T. MCAULIFFE	10/2009			
CHECKED:	M. GIESMANN	10/2009			
SUPERVISOR:	R. JOHNSON	01/2010	NUM.	REVISION	BY / DATE

DAVID DEANE McCURDY JR. STATE OF WASHINGTON 45472 REGISTERED PROFESSIONAL ENGINEER

HNTB

FED. AID No.

PROJECT No. 300197

SURVEY No. 32-24-4-22

MAINTENANCE DIVISION No. 3

Barbara Grygutis Sculpture LLC

KING COUNTY DEPT. OF TRANSPORTATION
HAROLD TANIGUCHI, DIRECTOR

SOUTH PARK BRIDGE #3179 REPLACEMENT

PEDESTRIAN RAILING
GEAR POST CONNECTION DETAILS – 1

King County

PR22

SHEET 553 OF 667 SHEETS

316-63 (___)

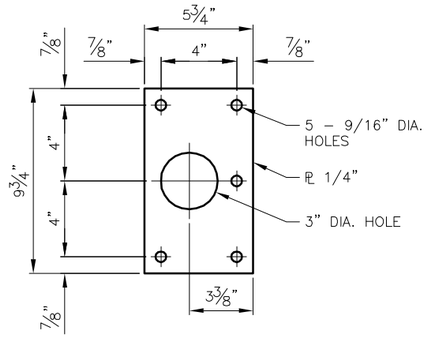

ANCHOR PLATE

DETAIL E PR20 PR21, PR22

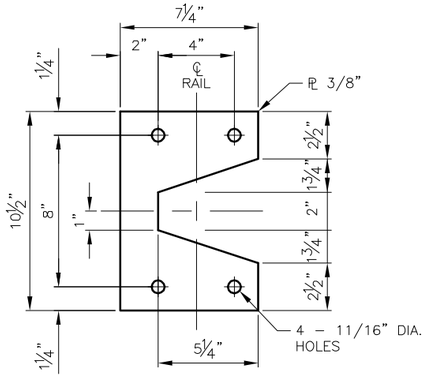

TOP PLATE

DETAIL F PR20 PR21

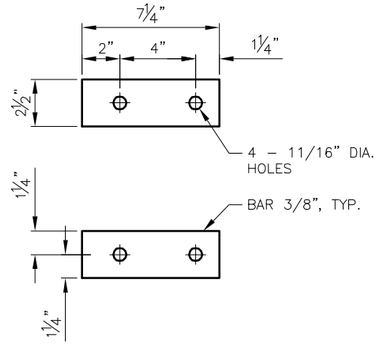

TOP PLATES

DETAIL G PR20 PR21

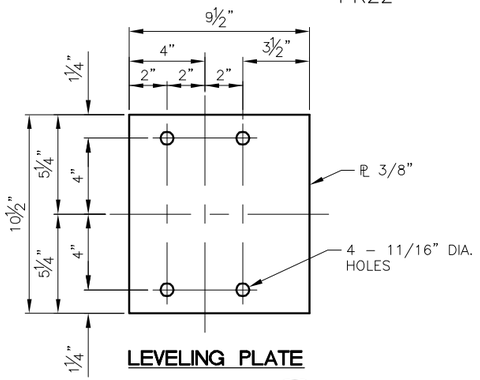

LEVELING PLATE

DETAIL H PR20 PR21

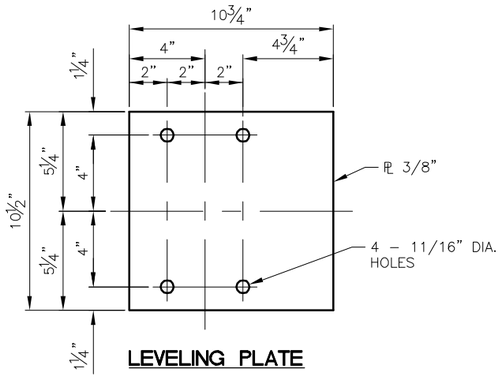

LEVELING PLATE

DETAIL I PR20

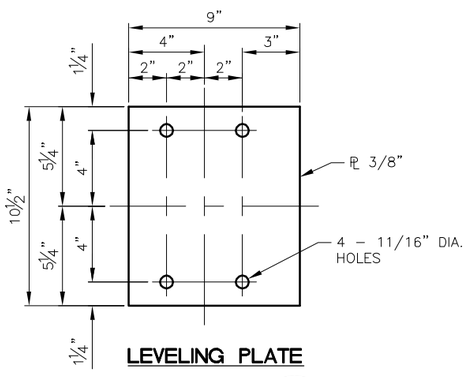

LEVELING PLATE

DETAIL J PR20 PR21

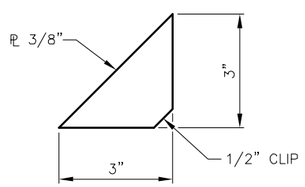

STIFFENER PLATE

DETAIL K PR20 PR21

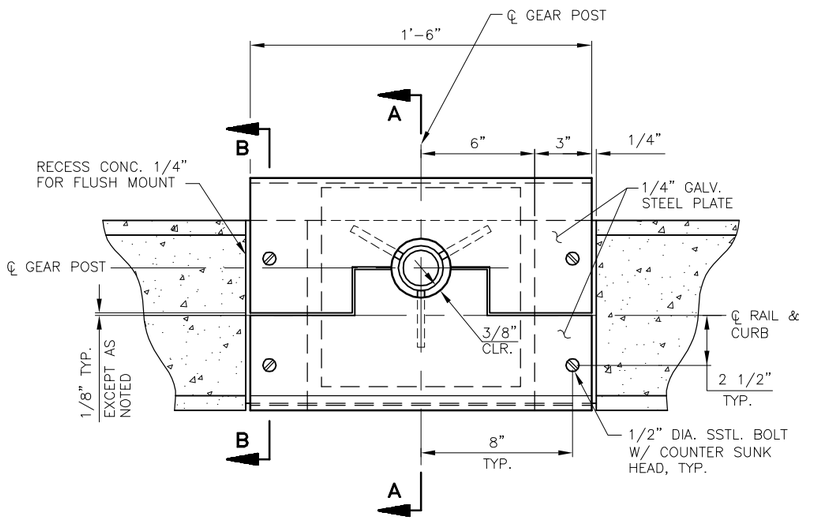

PLAN

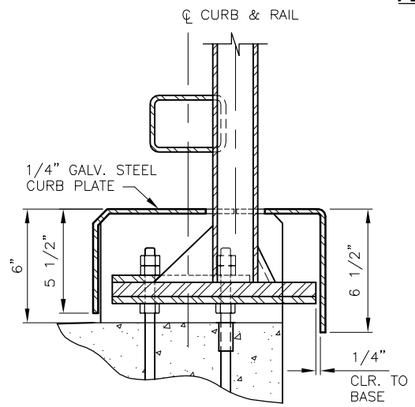

SECTION A-A

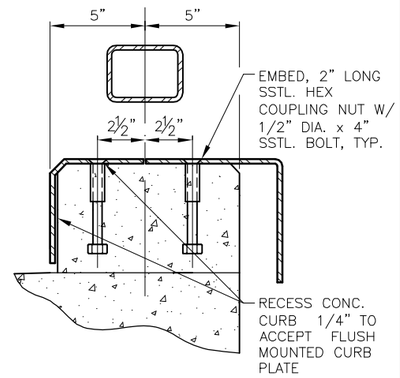

SECTION B-B

CURB COVER

DETAIL L PR20 PR21, PR22, PR24

FIELD BOOK:					
SURVEYED:					
SURVEY BASE MAP:					
DESIGN ENTERED: S. COUTURE	10/2009				
DESIGNED T. MCAULIFFE	10/2009				
CHECKED: M. GIESMANN	10/2009				
SUPERVISOR: R. JOHNSON	01/2010	NUM.	REVISION	BY	DATE

DAVID DEANE McCURDY JR. 25472 STATE OF WASHINGTON REGISTERED PROFESSIONAL ENGINEER

HNTB

FED. AID No.

PROJECT No. 300197

SURVEY No. 32-24-4-22

MAINTENANCE DIVISION No. 3

Barbara Grygutis Sculpture LLC

KING COUNTY DEPT. OF TRANSPORTATION
HAROLD TANIGUCHI, DIRECTOR

SOUTH PARK BRIDGE #3179 REPLACEMENT

PEDESTRIAN RAILING
GEAR POST CONNECTION DETAILS – 2

King County

PR23

SHEET 554 OF 667 SHEETS

316-63 (___)

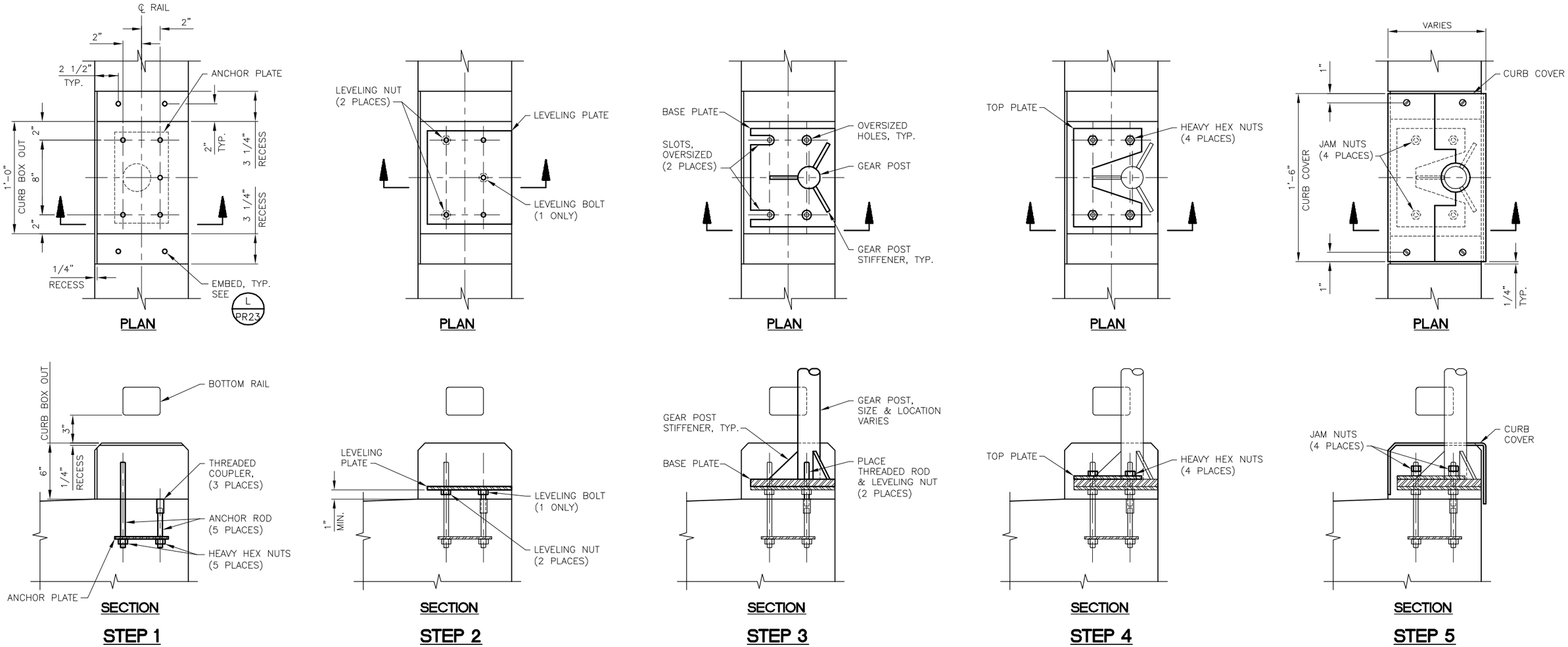

GEAR MOUNTING CONSTRUCTION SEQUENCE

FIELD BOOK:		
SURVEYED:		
SURVEY BASE MAP:		
DESIGN ENTERED:	S. COUTURE	09/2009
DESIGNED	T. MCAULIFFE	10/2009
CHECKED:	M. GIESMANN	10/2009
SUPERVISOR:	R. JOHNSON	01/2010

NUM.	REVISION	BY	DATE

DAVID DRANE McCURRY JR. STATE OF WASHINGTON 45472 REGISTERED PROFESSIONAL ENGINEER

HNTB

FED. AID No.

PROJECT No. 300197

SURVEY No. 32-24-4-22

MAINTENANCE DIVISION No. 3

Barbara Grygutis

Sculpture LLC

KING COUNTY DEPT. OF TRANSPORTATION

HAROLD TANIGUCHI, DIRECTOR

SOUTH PARK BRIDGE #3179 REPLACEMENT

PEDESTRIAN RAILING

GEAR MOUNTING CONSTRUCTION SEQUENCE

King County

PR24

SHEET 555 OF 667 SHEETS

316-63 (____)

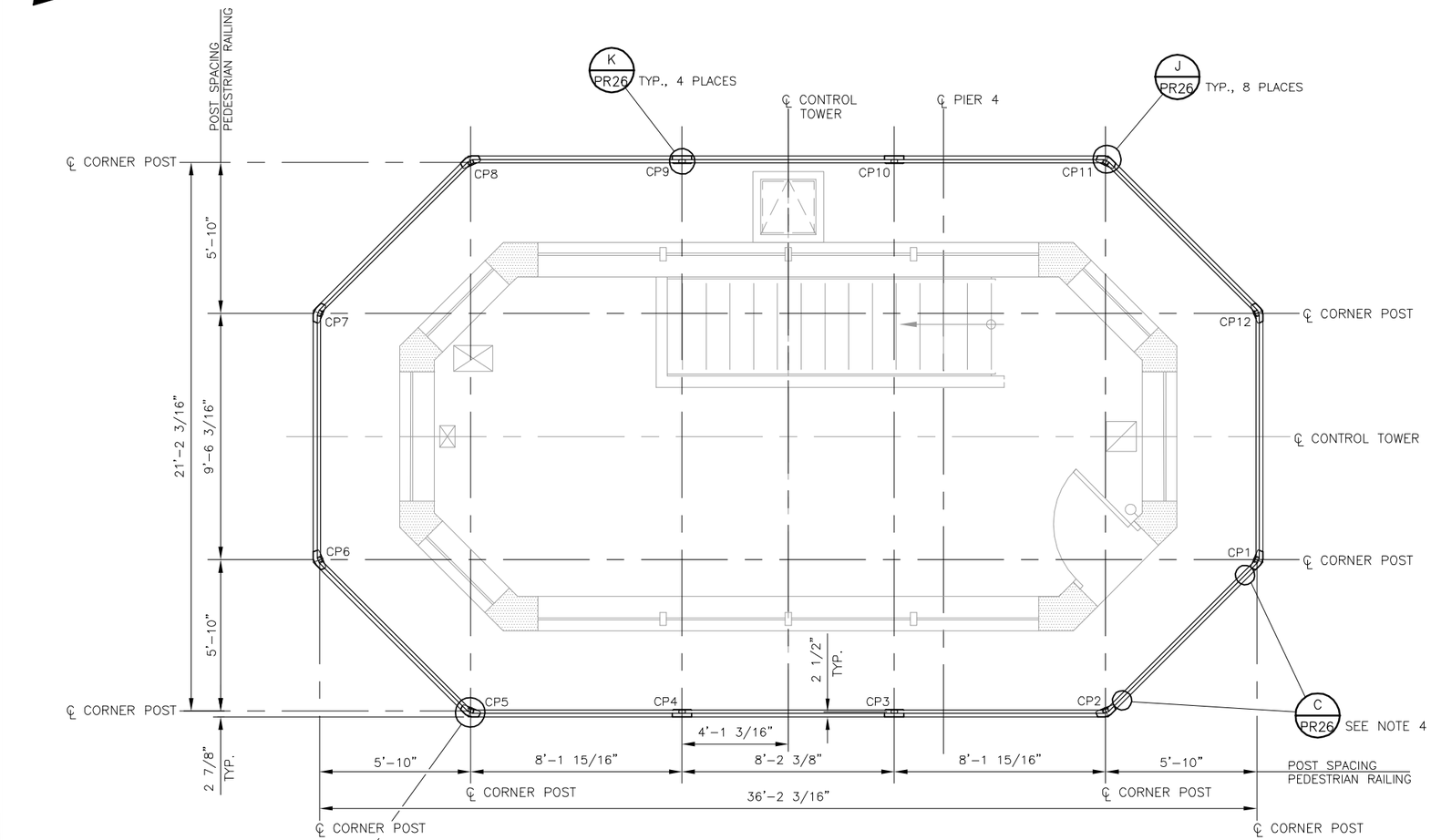

CONTROL TOWER RAILING LAYOUT

(PIER 4 SHOWN, PIER 3 ROTATED 180°)

2 1 0 2 4 6
SCALE IN FEET

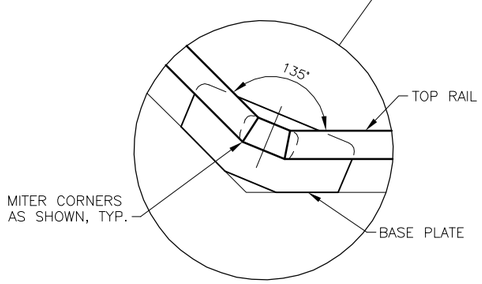

CORNER - TOP RAILING

NOTES:

1. USE RAILING TABLE BELOW FOR PIER 3 AND PIER 4.
2. SEE BELOW FOR RAILING PANEL AND SHEET PR26 FOR DETAILS.
3. SEE SHEET PR08 FOR ADDITIONAL NOTES.
4. PLACE RAILING SLEEVES IN TOP AND BOTTOM HORIZONTAL MEMBERS TO ALLOW REMOVAL OF PANEL.

LEGEND

E – EXPANSION CONNECTION (SEE BELOW FOR RAILING PANEL)
E* – EXPANSION CONNECTION WITH FIELD SLEEVE PINNING (SEE DETAILS B AND M ON SHEET PR26)
F – FIXED CONNECTION (SEE BELOW FOR RAILING PANEL)
L – LEFT (SEE SHEET PR08)
R – RIGHT (SEE SHEET PR08)
CW – LOOKING CLOCKWISE FROM POST
CCW – LOOKING COUNTERCLOCKWISE FROM POST

POST	CONNECTION		PICKET ORIENT.	COMMENT
	CCW	CW		
CP1	F	E	R	135 DEG.
CP2	E	F	R	135 DEG.
CP3	F	E	R	
CP4	E*	F	R	
CP5	F	E	R	135 DEG.
CP6	E*	F	R	135 DEG.
CP7	F	E*	R	135 DEG.
CP8	E	F	R	135 DEG.
CP9	F	E*	R	
CP10	E	F	R	
CP11	F	E*	R	135 DEG.
CP12	E	F	R	135 DEG.

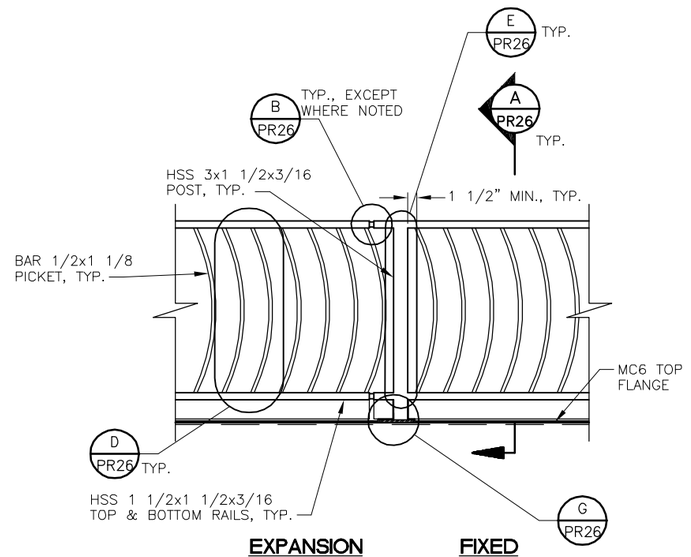

EXPANSION **FIXED**

RAILING PANEL

FIELD BOOK:							
SURVEYED:							
SURVEY BASE MAP:							
DESIGN ENTERED:	S. COUTURE	09/2009					
DESIGNED	T. MCAULIFFE	10/2009					
CHECKED:	M. GIESMANN	10/2009					
SUPERVISOR:	R. JOHNSON	01/2010					
			NUM.	REVISION	BY	DATE	

DAVID DRANE McCOURT JR. STATE OF WASHINGTON 45472 REGISTERED PROFESSIONAL ENGINEER

HNTB

FED. AID No.
PROJECT No. 300197
SURVEY No. 32-24-4-22
MAINTENANCE DIVISION No. 3

Barbara Grygutis Sculpture LLC

KING COUNTY DEPT. OF TRANSPORTATION
HAROLD TANIGUCHI, DIRECTOR
SOUTH PARK BRIDGE #3179 REPLACEMENT
CONTROL TOWER
RAILING LAYOUT, TABLE & DETAILS

King County

PR25
SHEET 556 OF 667 SHEETS
316-63 (___)

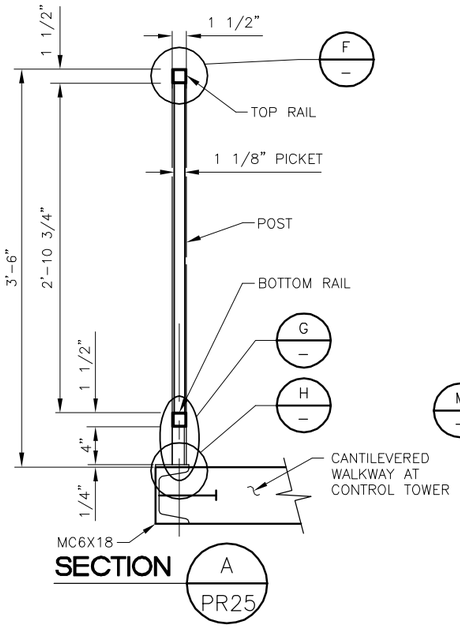

SECTION A PR25

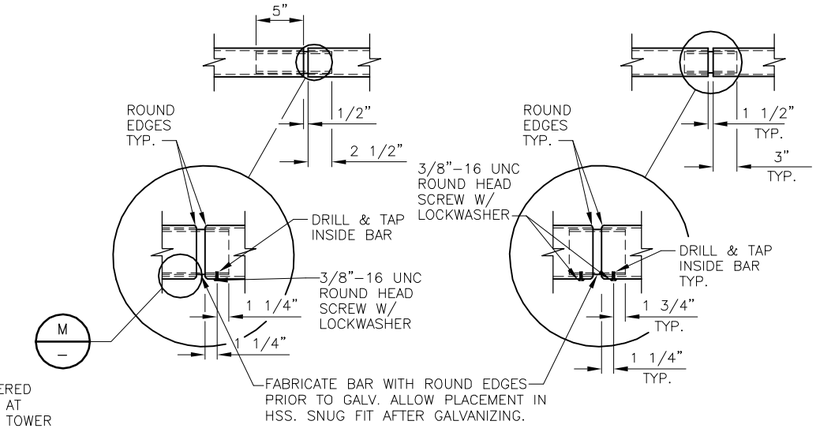

RAILING SLEEVE

DETAIL B PR25

SCALE: NTS

RAILING SLEEVE

DETAIL C PR25

SCALE: NTS

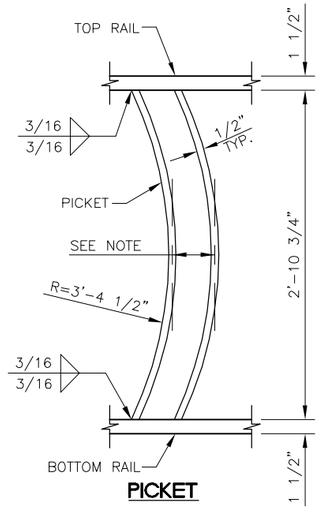

PICKET

DETAIL D PR25

NOTE:

PICKET SPACING BETWEEN POSTS SHALL BE EQUAL WITH A MAXIMUM PICKET SPACING OF 4 1/2 INCHES.

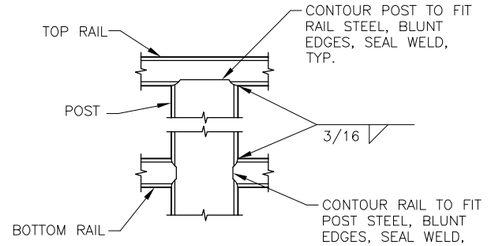

RAIL TO POST WELD

DETAIL E PR25

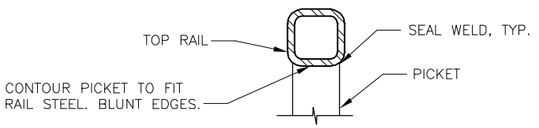

DETAIL F —

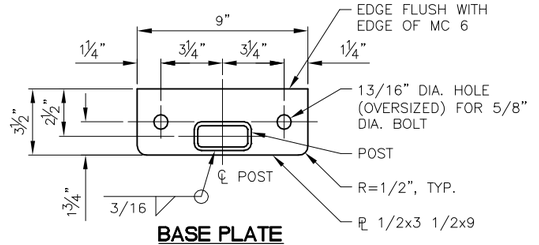

BASE PLATE

DETAIL K PR25

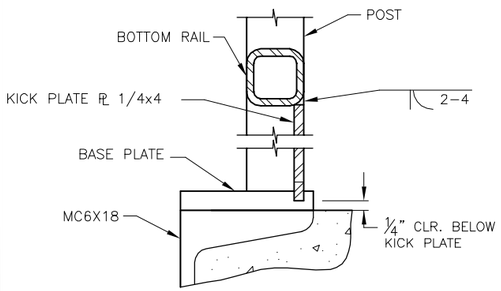

SECTION

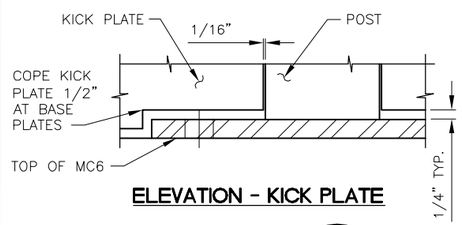

ELEVATION - KICK PLATE

DETAIL G PR25

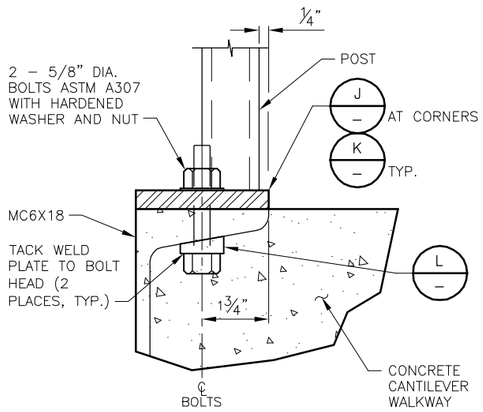

ANCHORAGE

DETAIL H —

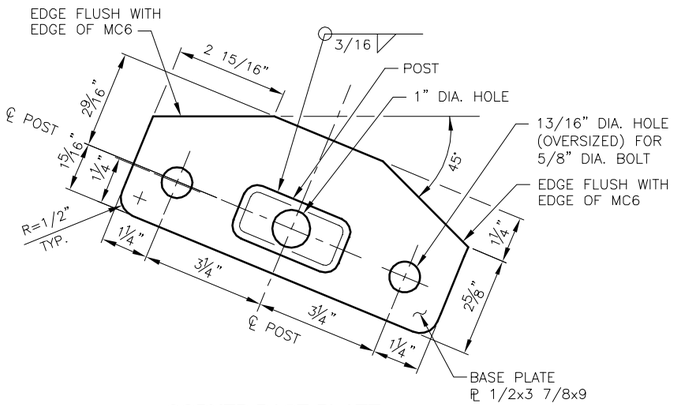

CORNER BASE PLATE

DETAIL J PR25

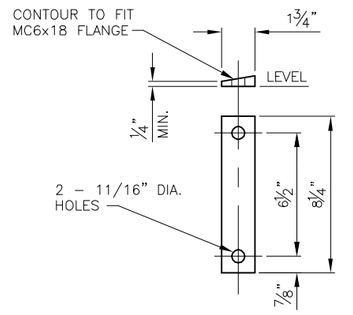

ANCHOR PLATE

DETAIL L —

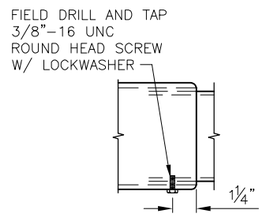

FIELD SLEEVE PINNING

DETAIL M —

FIELD BOOK:					
SURVEYED:					
SURVEY BASE MAP:					
DESIGN ENTERED:	S. COUTURE	09/2009			
DESIGNED	T. MCAULIFFE	10/2009			
CHECKED:	M. GIESMANN	10/2009			
SUPERVISOR:	R. JOHNSON	01/2010	NUM.	REVISION	BY / DATE

DAVID DEANE MCQUARY JR. STATE OF WASHINGTON 46478 REGISTERED PROFESSIONAL ENGINEER

HNTB

FED. AID No.

PROJECT No. 300197

SURVEY No. 32-24-4-22

MAINTENANCE DIVISION No. 3

Barbara Grygutis Sculpture LLC

KING COUNTY DEPT. OF TRANSPORTATION
HAROLD TANIGUCHI, DIRECTOR

SOUTH PARK BRIDGE #3179 REPLACEMENT

CONTROL TOWER
POST CONNECTION DETAILS

King County

PR26

SHEET 557 OF 667 SHEETS

316-63 (___)

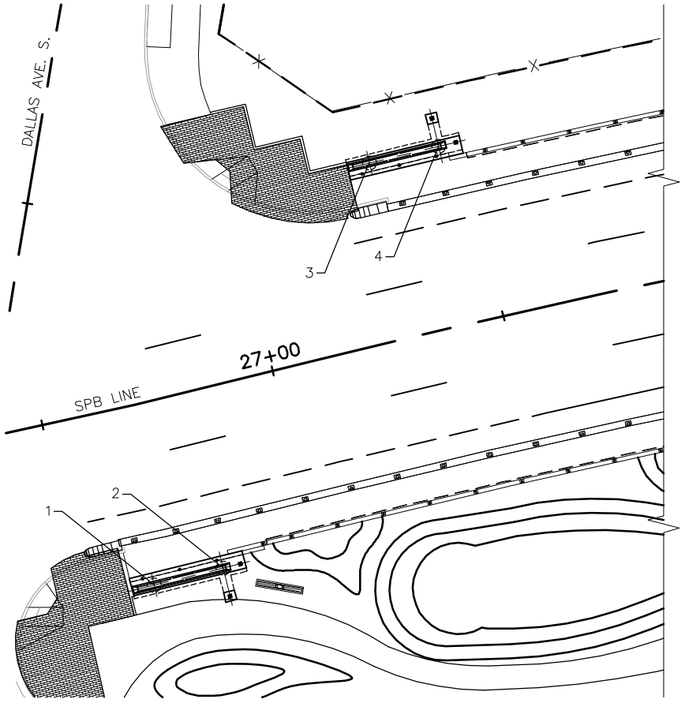

SOUTH APPROACH - LAYOUT PLAN
N.T.S.

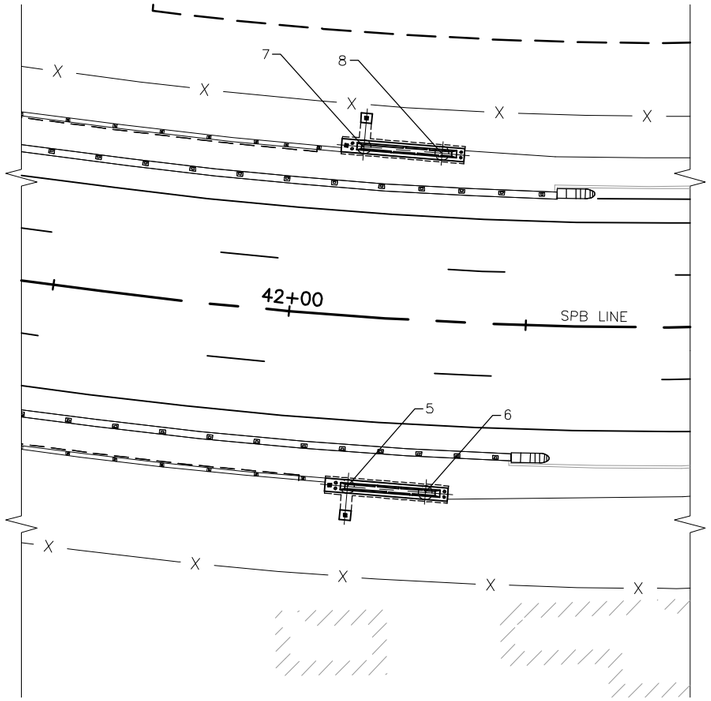

NORTH APPROACH - LAYOUT PLAN
N.T.S.

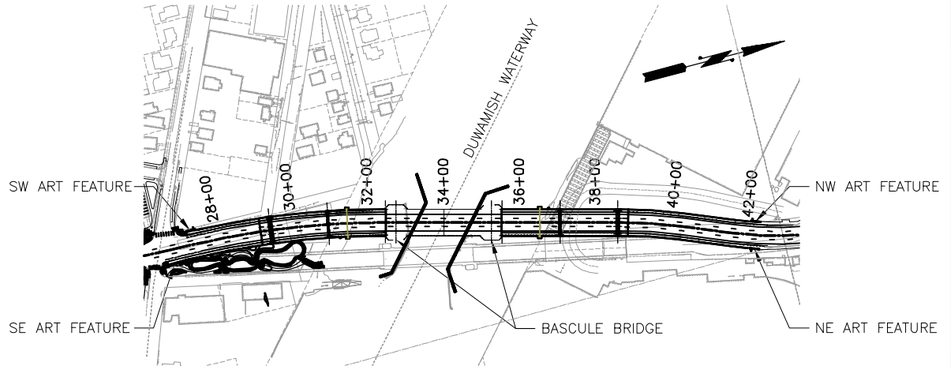

LOCATION PLAN
N.T.S.

ART FEATURE - LOCATION TABLE

POINT	DESCRIPTION	ELEVATION	NORTHING	EASTING
1	SE ℄ DRILLED SHAFT	22.00	195917.36	1274450.57
2	SE ℄ DRILLED SHAFT	22.00	195932.35	1274451.04
3	SW ℄ DRILLED SHAFT	24.25	195985.11	1274376.99
4	SW ℄ DRILLED SHAFT	24.25	196000.10	1274377.57
5	NE ℄ DRILLED SHAFT	19.50	197402.48	1274821.42
6	NE ℄ DRILLED SHAFT	19.50	197417.96	1274827.12
7	NW ℄ DRILLED SHAFT	19.50	197425.18	1274753.34
8	NW ℄ DRILLED SHAFT	19.50	197440.65	1274759.08

ELEVATIONS LISTED ARE AT TOP OF CONCRETE FOOTING

GENERAL NOTES

1. THIS STRUCTURE HAS BEEN DESIGNED IN ACCORDANCE WITH THE REQUIREMENTS OF THE FOLLOWING:

   AASHTO "LRFD BRIDGE DESIGN SPECIFICATIONS", 4TH EDITION, WITH INTERIMS THROUGH 2008.

   AISC "STEEL CONSTRUCTION MANUAL" 13TH EDITION

   ACI "BUILDING CODE REQUIREMENTS FOR STRUCTURAL CONCRETE AND COMMENTARY, ACI 318", 2005.

2. REFER TO SHEET "AF02" FOR RECLAMATION INFORMATION AND DETAILS.
3. REFER TO SHEETS "AF04", "AF08" AND "GR01" THROUGH "GR05" FOR GRADING INFORMATION.

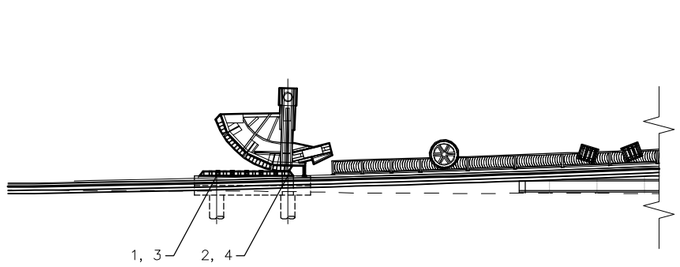

SOUTH APPROACH - LAYOUT ELEVATION
N.T.S.

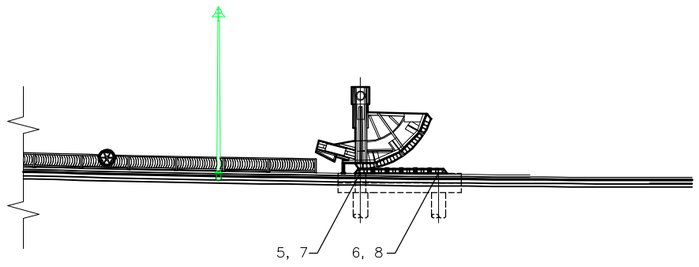

NORTH APPROACH - LAYOUT ELEVATION
N.T.S.

FIELD BOOK:					
SURVEYED:					
SURVEY BASE MAP:					
DESIGN ENTERED:	A. CHAPPELL	12/2009			
DESIGNED	A. CHAPPELL	12/2009			
CHECKED:	F. VESCI	12/2009			
SUPERVISOR:	R. JOHNSON	01/2010	NUM.	REVISION	BY / DATE

RICHARD M. JOHNSON — STATE OF WASHINGTON — 43017 — REGISTERED PROFESSIONAL ENGINEER

HNTB

FED. AID No.

PROJECT No. 300197

SURVEY No. 32-24-4-22

MAINTENANCE DIVISION No. 3

Barbara Grygutis Sculpture LLC

KING COUNTY DEPT. OF TRANSPORTATION
HAROLD TANIGUCHI, DIRECTOR

SOUTH PARK BRIDGE #3179 REPLACEMENT

ART FEATURE GENERAL PLAN & ELEVATION

King County

AF01

SHEET 558 OF 667 SHEETS

316-63 (___)

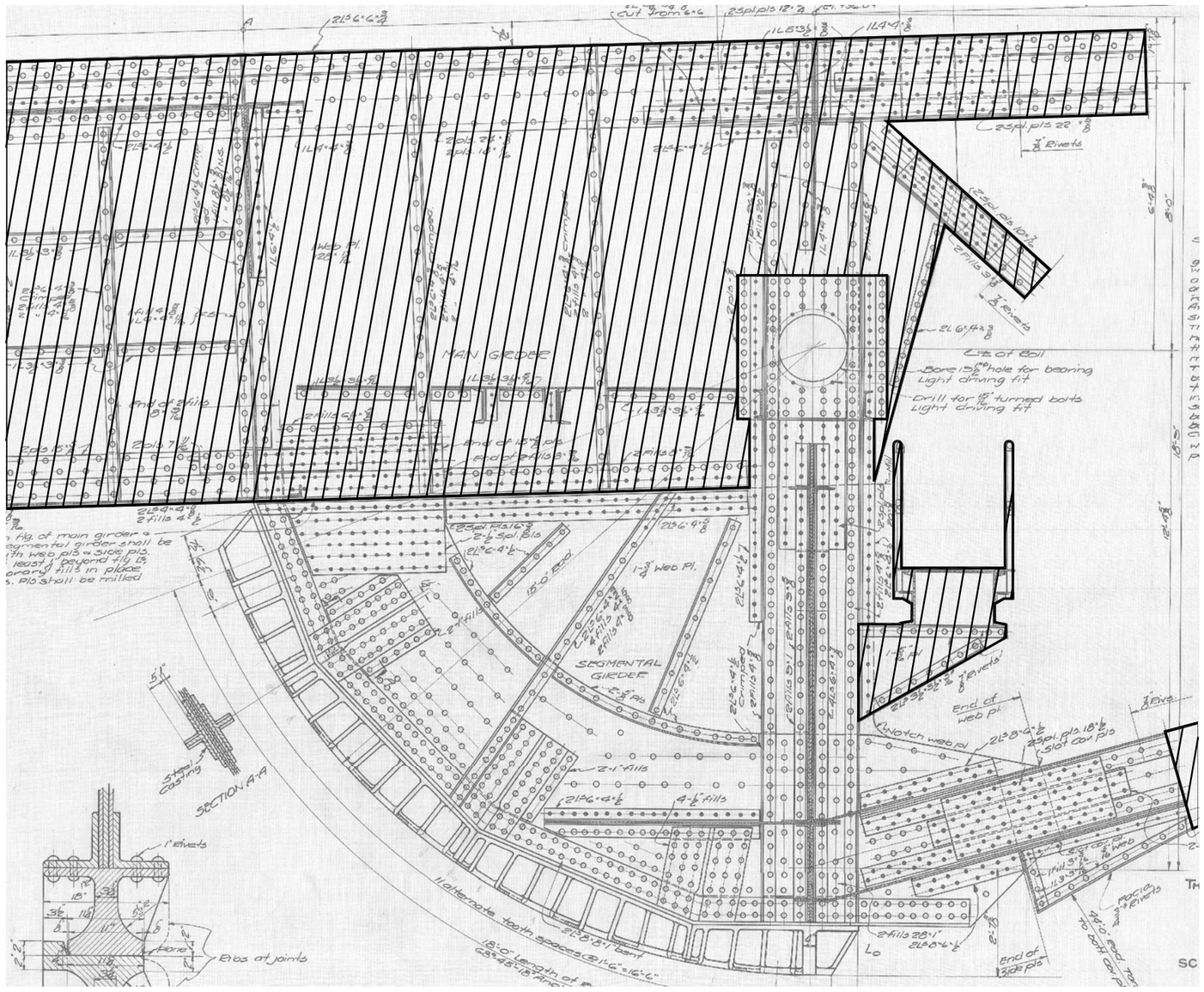

ROCKER GIRDER RECLAMATION - 4 TYPICAL

N.T.S.

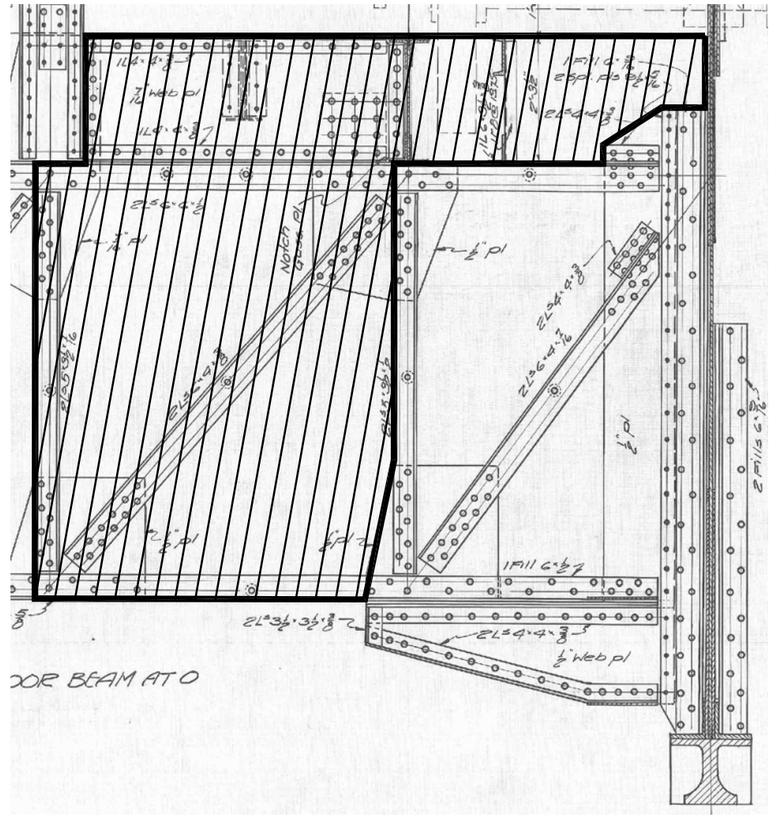

SIDE SUPPORT RECLAMATION - 4 TYPICAL

N.T.S.

LEGEND

REMOVAL CUT LINE

NOTES:

1. DRESS ALL EDGES
2. REFER TO "DM" SHEETS FOR SALVAGE AND DEMOLITION INFORMATION NOT SHOWN HERE.

FIELD BOOK:									
SURVEYED:									
SURVEY BASE MAP:									
DESIGN ENTERED:	A. CHAPPELL	12/2009							
DESIGNED	A. CHAPPELL	12/2009							
CHECKED:	F. VESCI	12/2009							
SUPERVISOR:	R. JOHNSON	01/2010	NUM.	REVISION	BY	DATE			

RICHARD M. JOHNSON — STATE OF WASHINGTON — 43017 — REGISTERED PROFESSIONAL ENGINEER

HNTB

FED. AID No.

PROJECT No. 300197

SURVEY No. 32-24-4-22

MAINTENANCE DIVISION No. 3

Barbara Grygutis
Sculpture LLC

KING COUNTY DEPT. OF TRANSPORTATION
HAROLD TANIGUCHI, DIRECTOR

SOUTH PARK BRIDGE #3179 REPLACEMENT

ART FEATURE RECLAMATION

King County

AF02

SHEET 559 OF 667 SHEETS

316-63 (___)

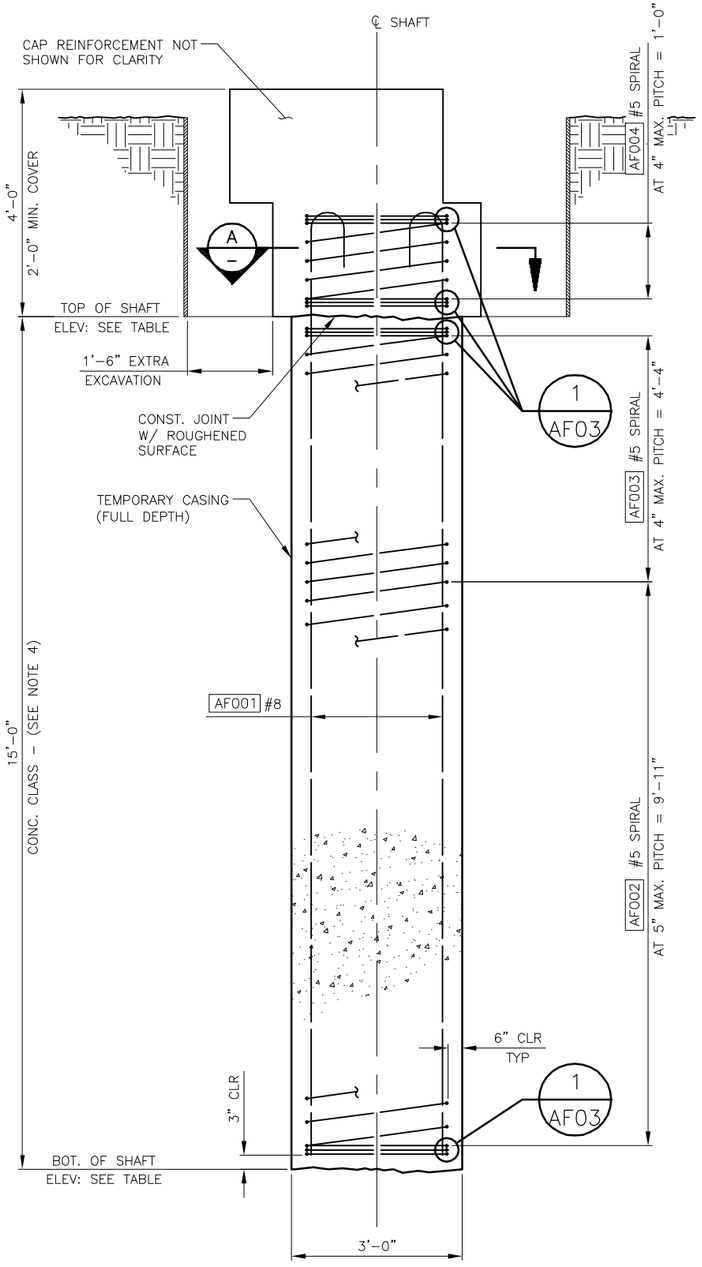

DRILLED SHAFT ELEVATION

SOUTH APPROACH SHOWN, NORTH APPROACH SIMILAR

2 1 0 2 4

SCALE IN FEET

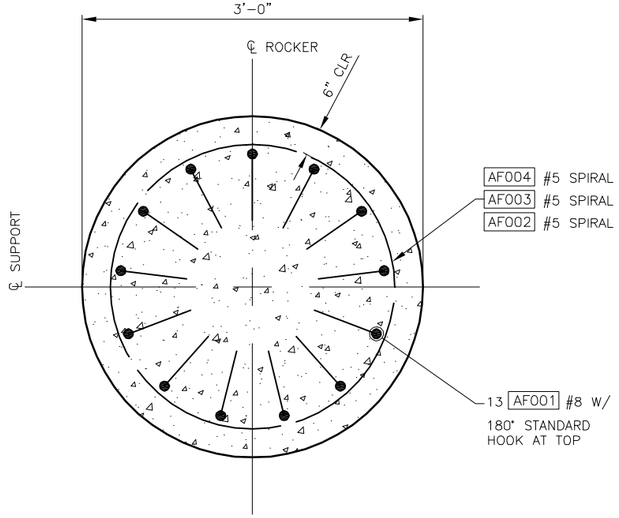

SECTION A AF03

2 1 0 2 4

SCALE IN FEET

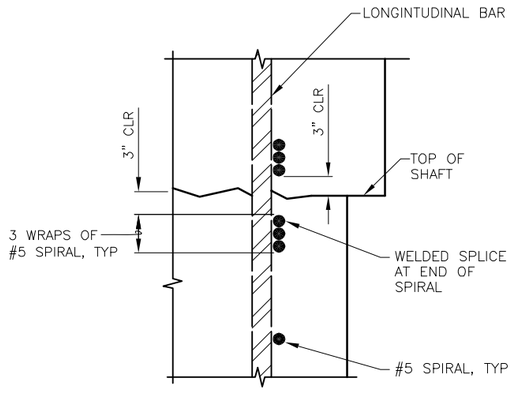

DETAIL 1 AF03

N.T.S.

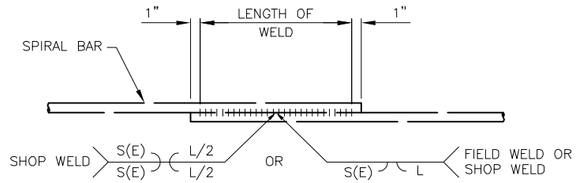

WELDED LAP SPLICE DETAIL

WELDING SHALL MEET THE REQUIREMENTS OF STANDARD SPECIFICATION 6-02.3(24)E FOR WELD DIMENSIONS, SEE TABLE BELOW.

SPIRAL OPTIONS

	WELD DIMENSIONS (INCHES)		
	S	E	LENGTH (L)
#5	5/16	3/16	6
#6	3/8	3/16	6

SHAFT ELEVATIONS

LOCATION	TOP OF SHAFT	BOT. OF SHAFT
SE	18.00	3.00
SW	20.25	5.25
NE	15.50	0.50
NW	15.50	0.50

DRILLED SHAFT NOTES:

1. SHAFT SPIRALS MAY BE FABRICATED FROM #5 DEFORMED REINFORCING BARS (AASHTO M31 GR 60), PLAIN SMOOTH BARS 5/8" DIA. (AASHTO M31, GR 60), DEFORMED WIRE D31 (AASHTO M225), OR COLD DRAWN WIRE W31 (AASHTO M32).
2. WELD SPIRAL REINFORCEMENT TO ITSELF AT SPIRAL TERMINUS OR BREAK PER WELDED LAP SPLICE DETAIL ON THIS SHEET.
3. SPIRAL REINFORCING SHALL BE SPLICED BY WELDING PER DETAIL 1, IN THE END REGIONS.

FIELD BOOK:			
SURVEYED:			
SURVEY BASE MAP:			
DESIGN ENTERED:	A. CHAPPELL	12/2009	
DESIGNED	A. CHAPPELL	12/2009	
CHECKED:	F. VESCI	12/2009	
SUPERVISOR:	R. JOHNSON	01/2010	

NUM.	REVISION	BY	DATE

RICHARD M. JOHNSON STATE OF WASHINGTON 43017 REGISTERED PROFESSIONAL ENGINEER

HNTB

FED. AID No.

PROJECT No. 300197

SURVEY No. 32-24-4-22

MAINTENANCE DIVISION No. 3

Barbara Grygutis Sculpture LLC

KING COUNTY DEPT. OF TRANSPORTATION
HAROLD TANIGUCHI, DIRECTOR

SOUTH PARK BRIDGE #3179 REPLACEMENT

ART FEATURE DRILLED SHAFT DETAILS

King County

AF03

SHEET 560 OF 667 SHEETS

316-63 (___)

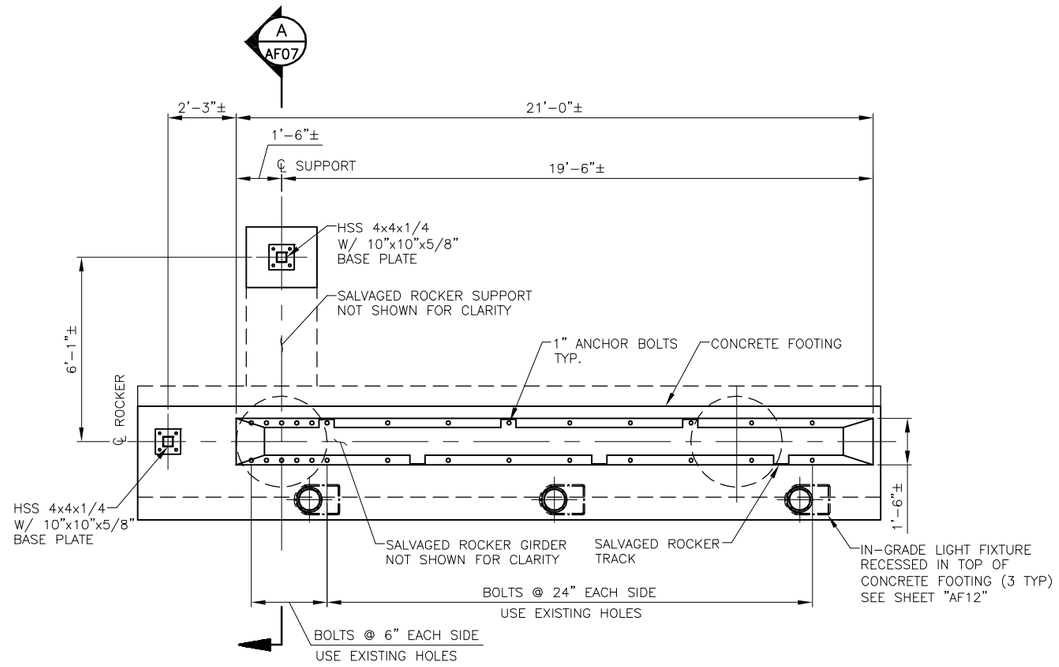

SOUTH APPROACH - PLAN

2 1 0 2 4
SCALE IN FEET

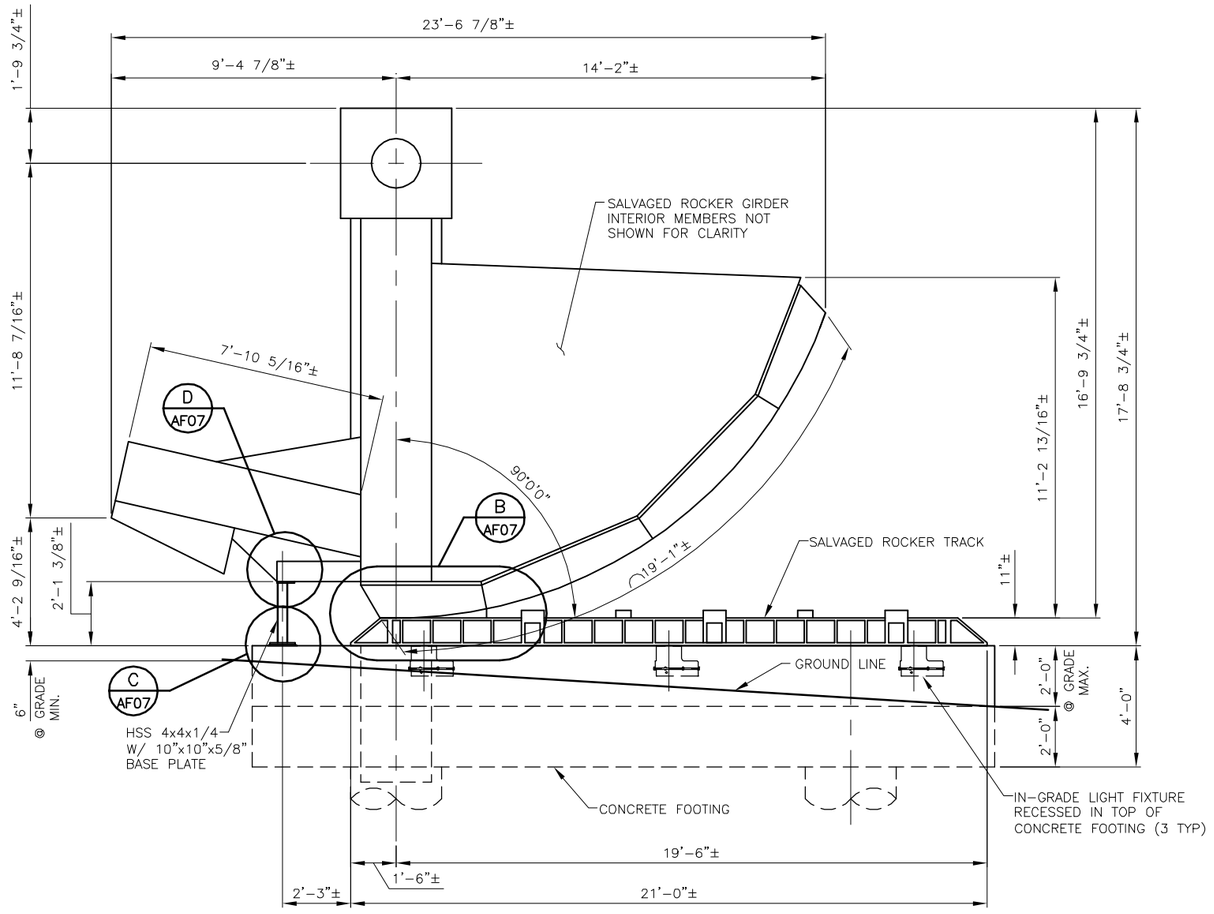

SOUTH APPROACH - ELEVATION

2 1 0 2 4
SCALE IN FEET

FIELD BOOK:					
SURVEYED:					
SURVEY BASE MAP:					
DESIGN ENTERED:	A. CHAPPELL	12/2009			
DESIGNED	A. CHAPPELL	12/2009			
CHECKED:	F. VESCI	12/2009			
SUPERVISOR:	R. JOHNSON	01/2010	NUM.	REVISION	BY / DATE

RICHARD M. JOHNSON — STATE OF WASHINGTON — 43017 — REGISTERED PROFESSIONAL ENGINEER

HNTB

FED. AID No.

PROJECT No. 300197

SURVEY No. 32-24-4-22

MAINTENANCE DIVISION No. 3

Barbara Grygutis
Sculpture LLC

KING COUNTY DEPT. OF TRANSPORTATION
HAROLD TANIGUCHI, DIRECTOR

SOUTH PARK BRIDGE #3179 REPLACEMENT

ART FEATURE SOUTH APPROACH PLAN AND ELEVATION

King County

AF04

SHEET 561 OF 667 SHEETS

316-63 (___)

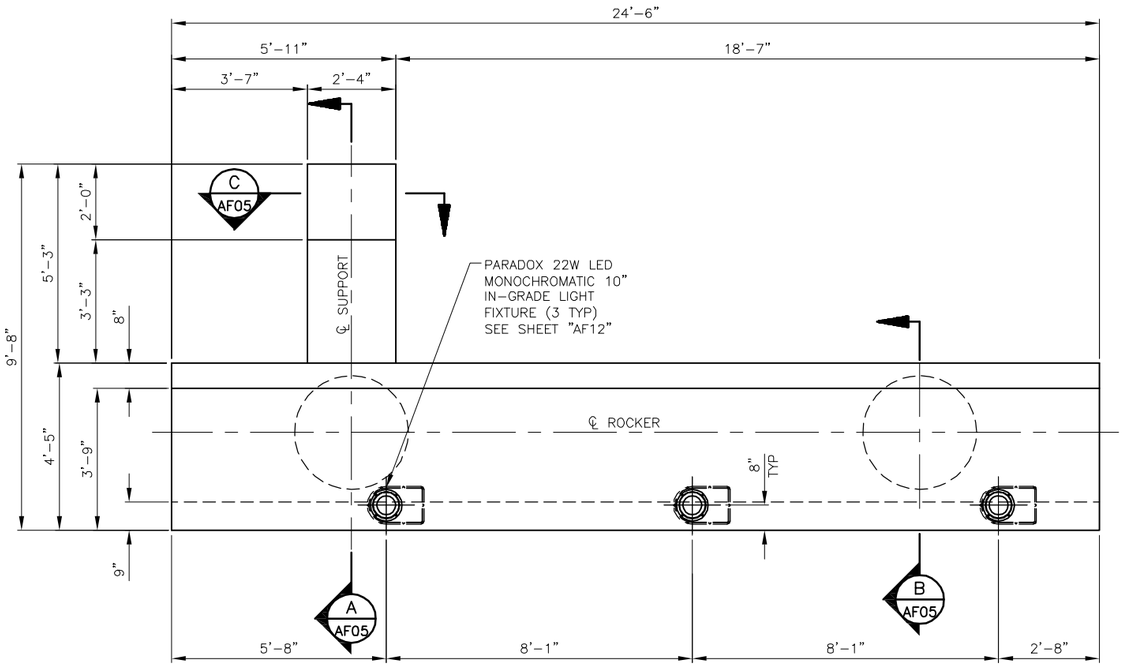

SOUTH APPROACH - FOOTING PLAN

2 1 0 2 4
SCALE IN FEET

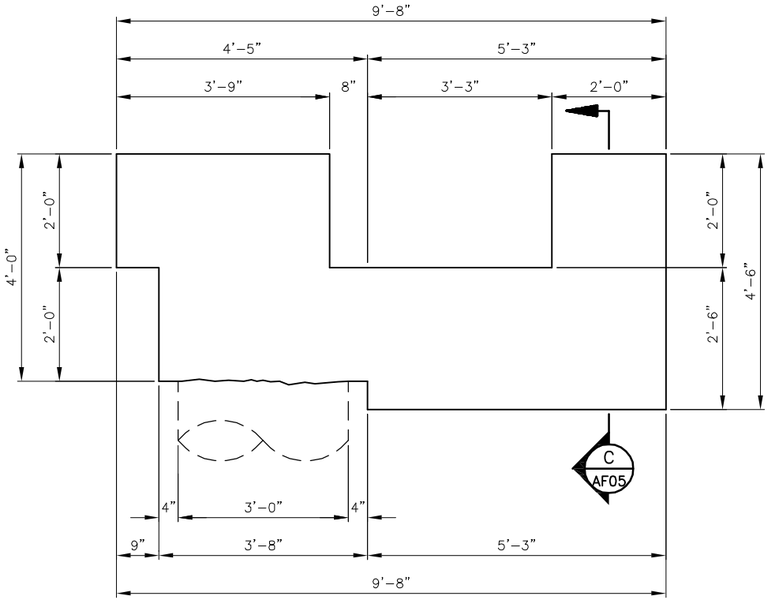

SECTION A AF05

2 1 0 2 4
SCALE IN FEET

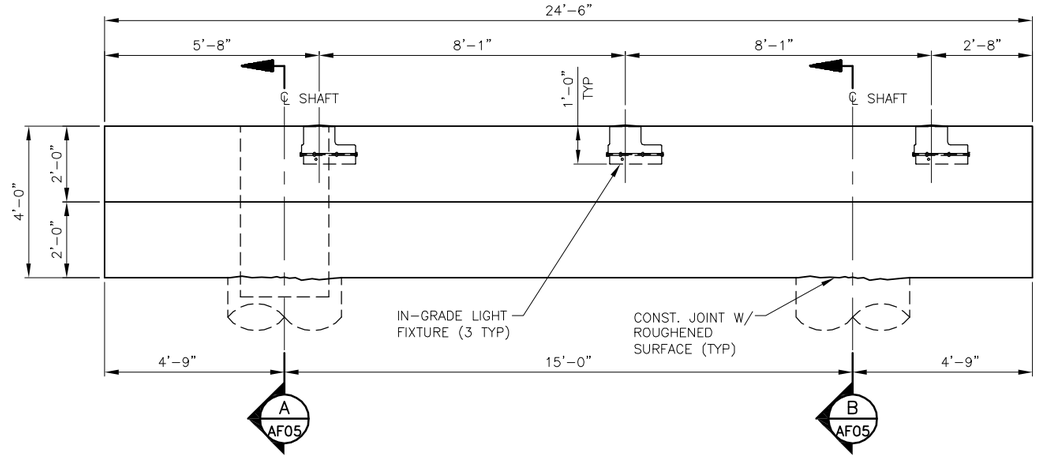

SOUTH APPROACH - FOOTING ELEVATION

2 1 0 2 4
SCALE IN FEET

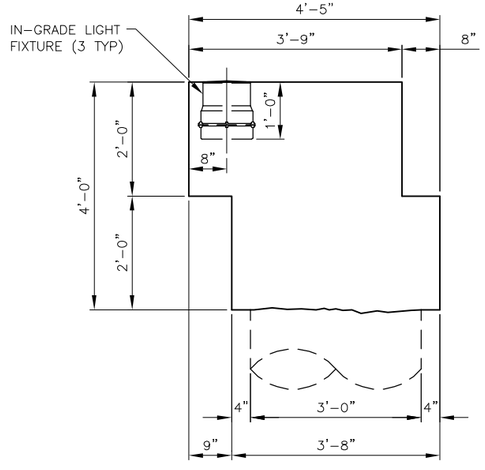

SECTION B AF05

2 1 0 2 4
SCALE IN FEET

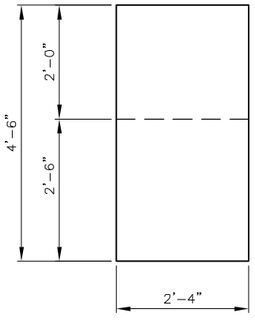

SECTION C AF05

2 1 0 2 4
SCALE IN FEET

FIELD BOOK:					
SURVEYED:					
SURVEY BASE MAP:					
DESIGN ENTERED:	A. CHAPPELL	12/2009			
DESIGNED	A. CHAPPELL	12/2009			
CHECKED:	F. VESCI	12/2009			
SUPERVISOR:	R. JOHNSON	01/2010	NUM.	REVISION	BY / DATE

RICHARD M. JOHNSON — STATE OF WASHINGTON — 43017 — REGISTERED PROFESSIONAL ENGINEER

HNTB

FED. AID No.
PROJECT No. 300197
SURVEY No. 32-24-4-22
MAINTENANCE DIVISION No. 3

Barbara Grygutis
Sculpture LLC

KING COUNTY DEPT. OF TRANSPORTATION
HAROLD TANIGUCHI, DIRECTOR

SOUTH PARK BRIDGE #3179 REPLACEMENT

ART FEATURE SOUTH APPROACH FOOTING DETAILS

King County

AF05

SHEET 562 OF 667 SHEETS

316-63 (___)

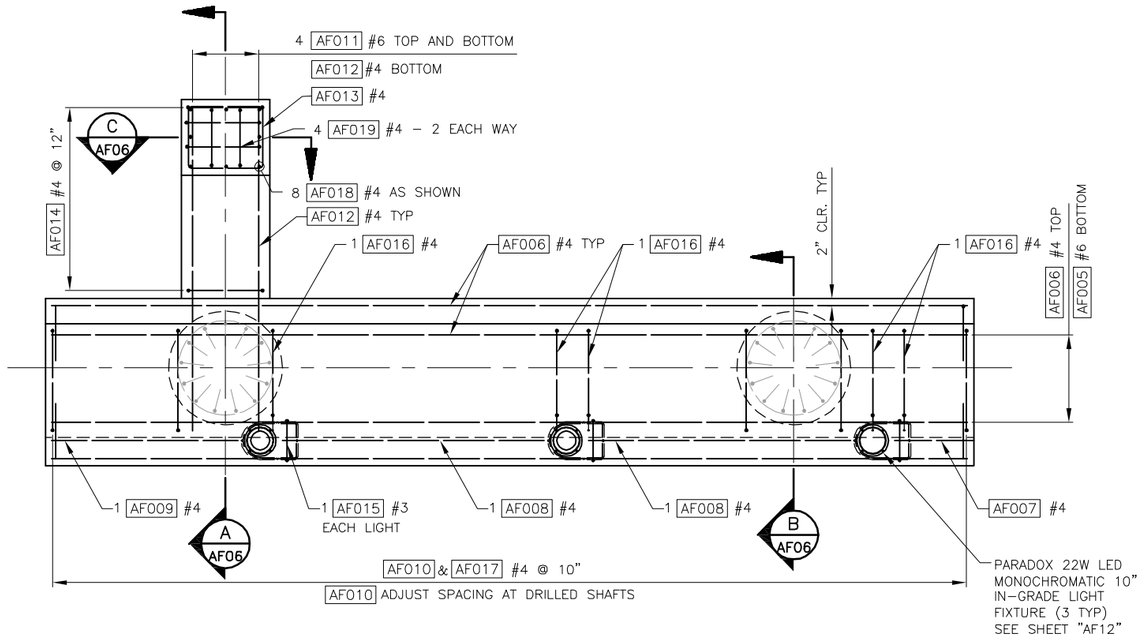

SOUTH APPROACH - FOOTING REINFORCEMENT PLAN

2 1 0 2 4
SCALE IN FEET

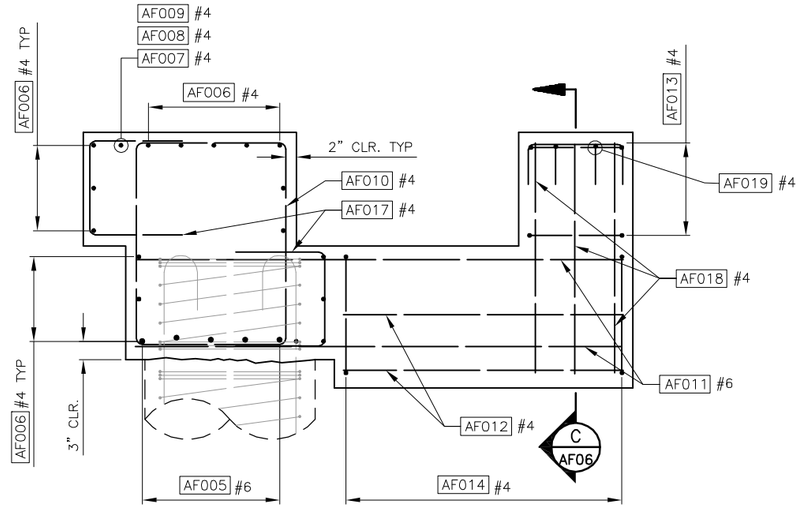

SECTION A AF06

2 1 0 2 4
SCALE IN FEET

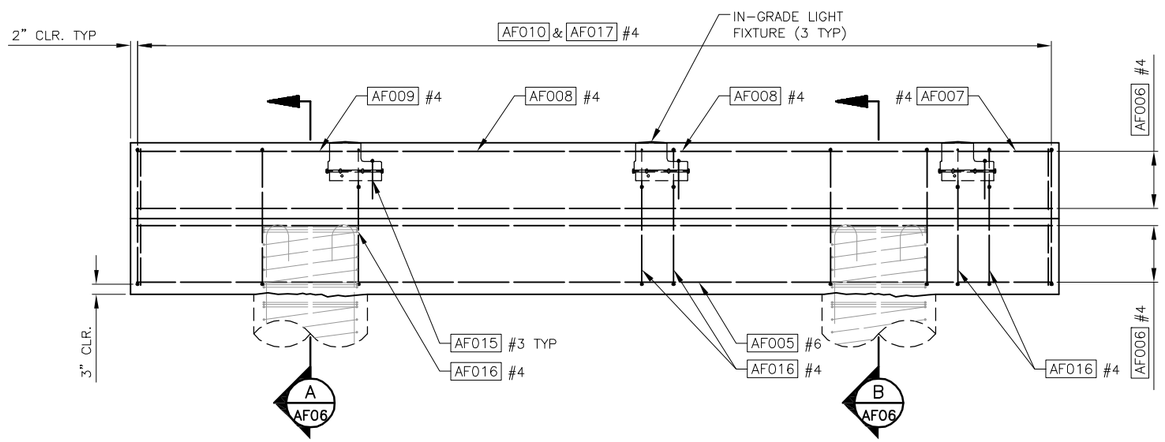

SOUTH APPROACH - FOOTING REINFORCEMENT ELEVATION

2 1 0 2 4
SCALE IN FEET

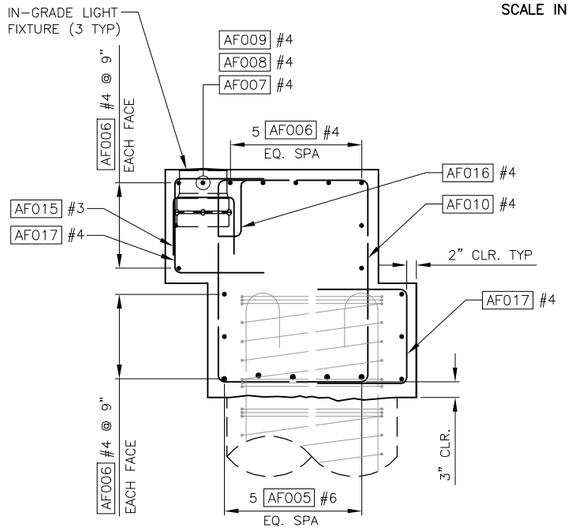

SECTION B AF06

2 1 0 2 4
SCALE IN FEET

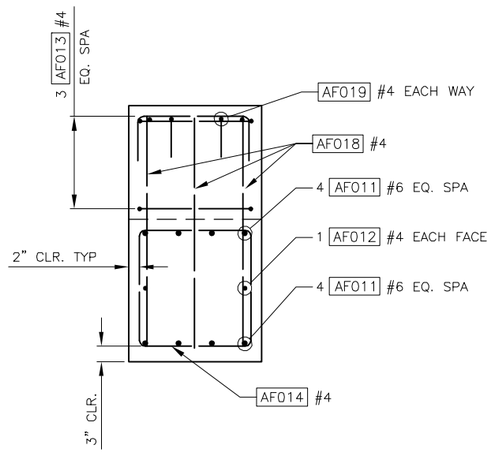

SECTION C AF06

2 1 0 2 4
SCALE IN FEET

FIELD BOOK:					
SURVEYED:					
SURVEY BASE MAP:					
DESIGN ENTERED:	A. CHAPPELL	12/2009			
DESIGNED	A. CHAPPELL	12/2009			
CHECKED:	F. VESCI	12/2009			
SUPERVISOR:	R. JOHNSON	01/2010	NUM.	REVISION	BY / DATE

RICHARD M. JOHNSON — STATE OF WASHINGTON — 43017 — REGISTERED PROFESSIONAL ENGINEER

HNTB

FED. AID No.
PROJECT No. 300197
SURVEY No. 32-24-4-22
MAINTENANCE DIVISION No. 3

Barbara Grygutis
Sculpture LLC

KING COUNTY DEPT. OF TRANSPORTATION
HAROLD TANIGUCHI, DIRECTOR

SOUTH PARK BRIDGE #3179 REPLACEMENT

ART FEATURE SOUTH APPROACH FOOTING REINFORCEMENT

King County

AF06

SHEET 563 OF 667 SHEETS

316-63 (___)

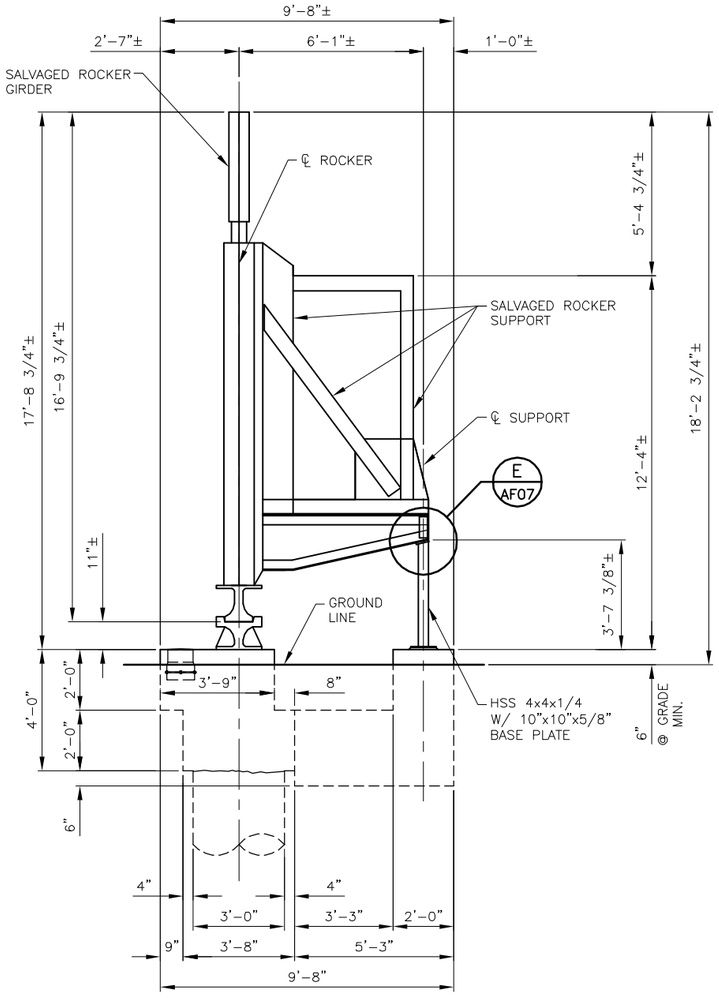

SECTION A AF04

2 1 0 2 4
SCALE IN FEET

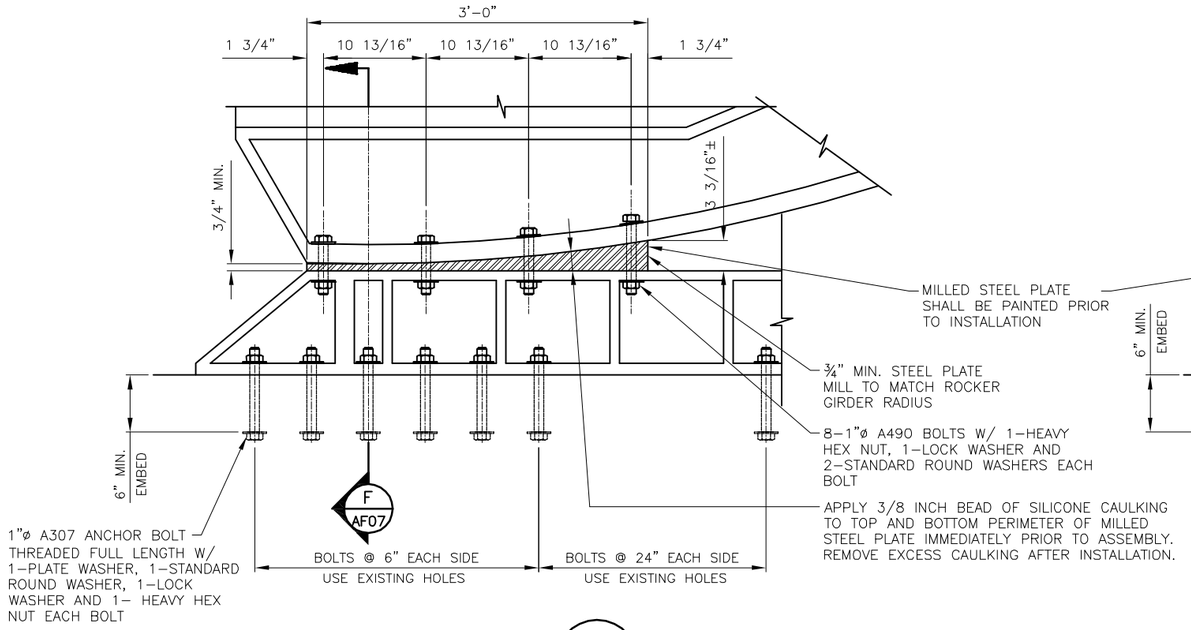

DETAIL B AF04
N.T.S.

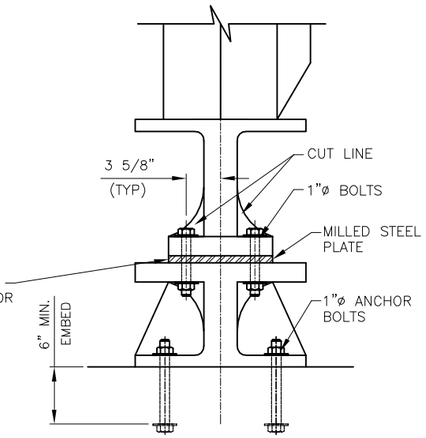

SECTION F AF07
N.T.S.

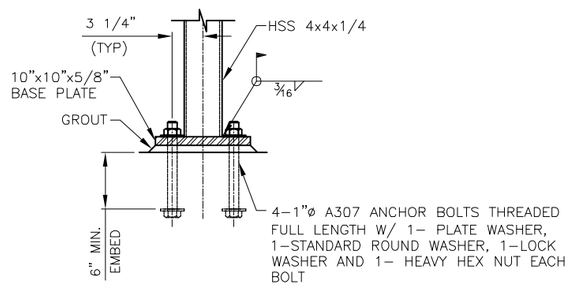

DETAIL C AF04
N.T.S.

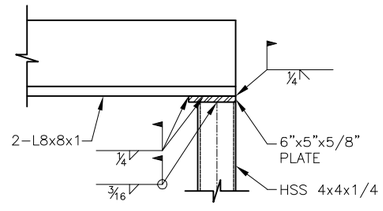

DETAIL D AF04
N.T.S.

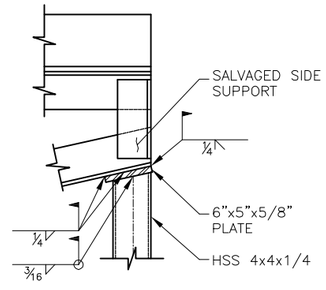

DETAIL E AF07
N.T.S.

FIELD BOOK:					
SURVEYED:					
SURVEY BASE MAP:					
DESIGN ENTERED:	A. CHAPPELL	12/2209			
DESIGNED	A. CHAPPELL	12/2009			
CHECKED:	F. VESCI	12/2009			
SUPERVISOR:	R. JOHNSON	01/2010	NUM.	REVISION	BY / DATE

RICHARD M. JOHNSON — STATE OF WASHINGTON — 43017 — REGISTERED PROFESSIONAL ENGINEER

HNTB

FED. AID No.
PROJECT No. 300197
SURVEY No. 32-24-4-22
MAINTENANCE DIVISION No. 3

Barbara Grygutis Sculpture LLC

KING COUNTY DEPT. OF TRANSPORTATION
HAROLD TANIGUCHI, DIRECTOR

SOUTH PARK BRIDGE #3179 REPLACEMENT

ART FEATURE SOUTH APPROACH SECTION AND DETAILS

King County

AF07

SHEET 564 OF 667 SHEETS

316-63 (___)

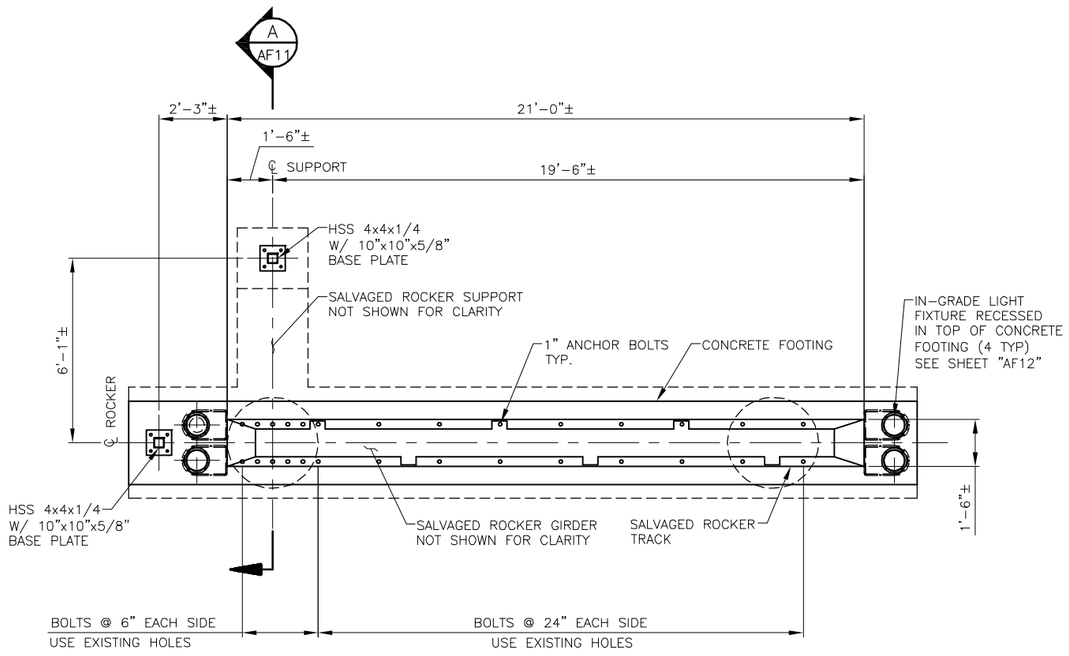

NORTH APPROACH - PLAN

2 1 0 2 4
SCALE IN FEET

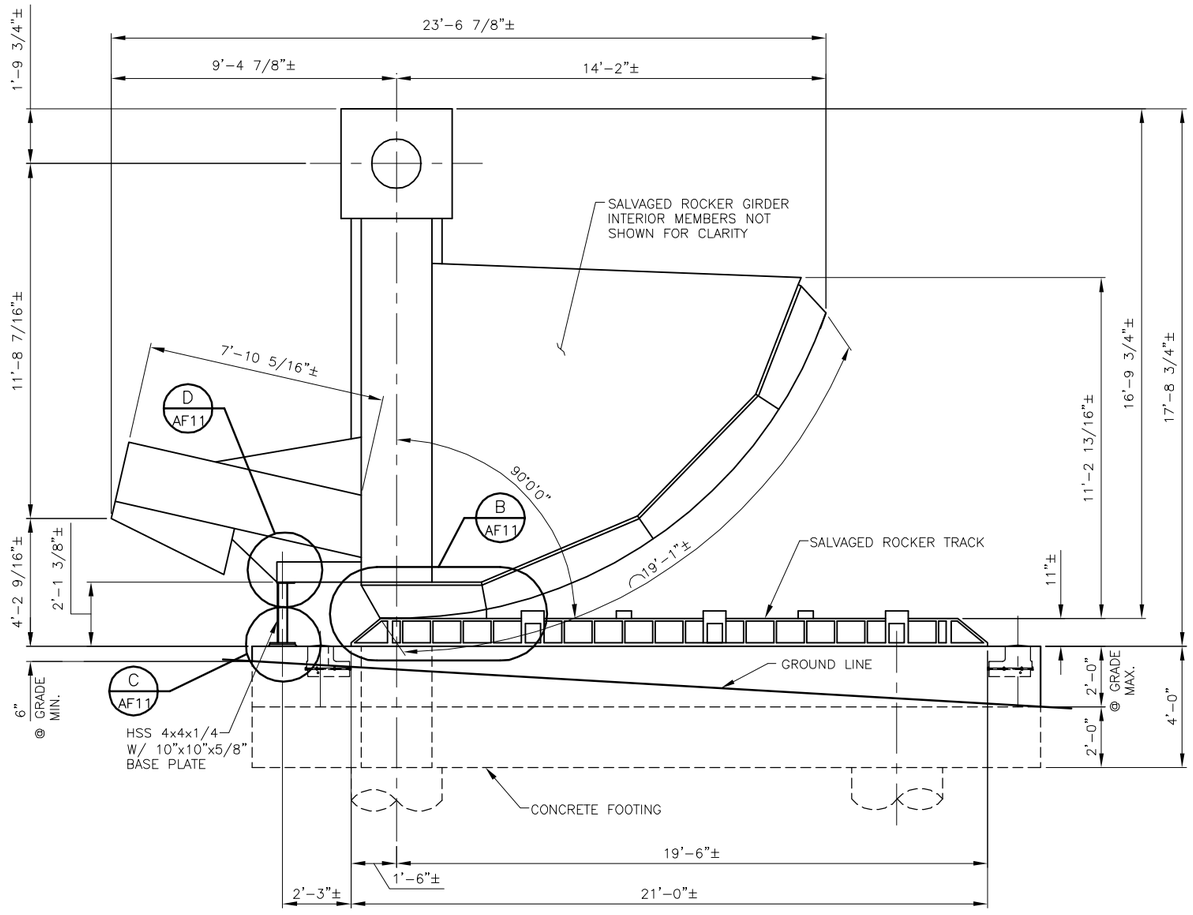

NORTH APPROACH - ELEVATION

2 1 0 2 4
SCALE IN FEET

FIELD BOOK:					
SURVEYED:					
SURVEY BASE MAP:					
DESIGN ENTERED:	A. CHAPPELL	12/2009			
DESIGNED	A. CHAPPELL	12/2009			
CHECKED:	F. VESCI	12/2009			
SUPERVISOR:	R. JOHNSON	01/2010	NUM.	REVISION	BY / DATE

RICHARD M. JOHNSON — STATE OF WASHINGTON — 43017 — REGISTERED PROFESSIONAL ENGINEER

HNTB

FED. AID No.

PROJECT No. 300197

SURVEY No. 32-24-4-22

MAINTENANCE DIVISION No. 3

Barbara Grygutis
Sculpture LLC

KING COUNTY DEPT. OF TRANSPORTATION
HAROLD TANIGUCHI, DIRECTOR

SOUTH PARK BRIDGE #3179 REPLACEMENT

ART FEATURE NORTH APPROACH PLAN AND ELEVATION

King County

AF08

SHEET 565 OF 667 SHEETS

316-63 (___)

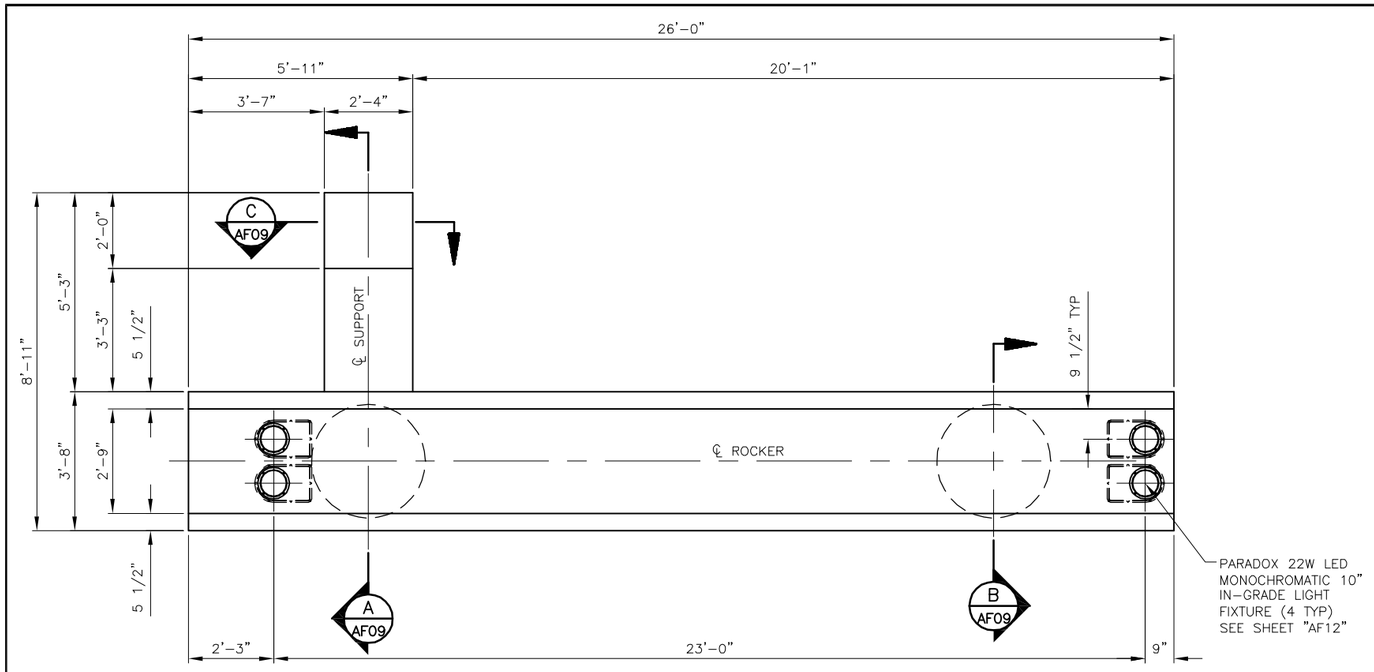

NORTH APPROACH - FOOTING PLAN

2 1 0 2 4
SCALE IN FEET

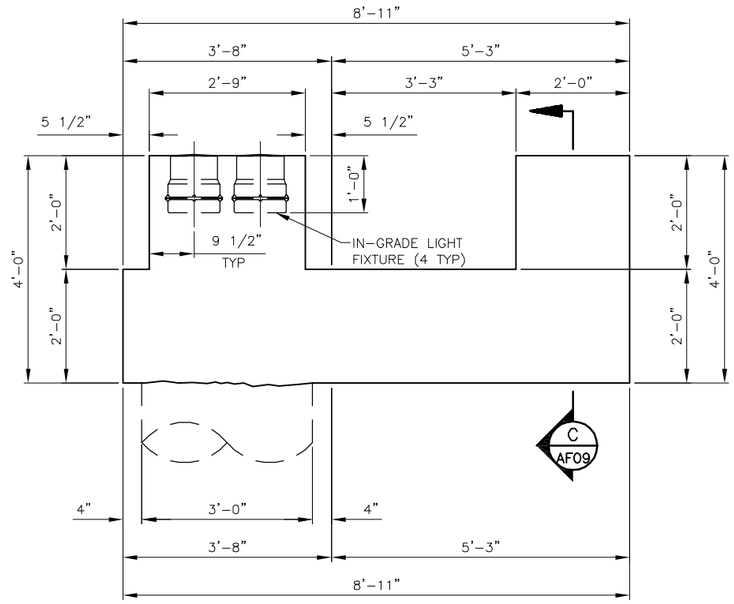

SECTION A AF09

2 1 0 2 4
SCALE IN FEET

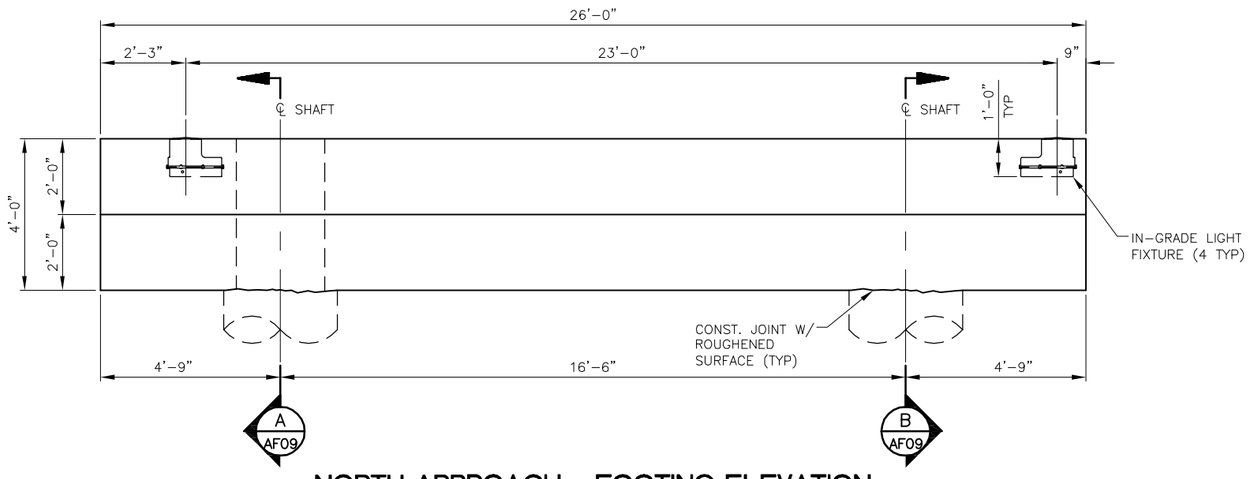

NORTH APPROACH - FOOTING ELEVATION

2 1 0 2 4
SCALE IN FEET

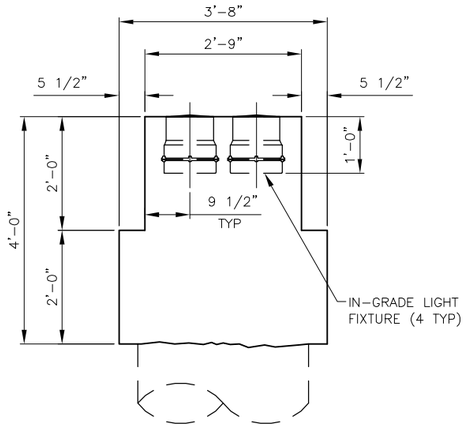

SECTION B AF09

2 1 0 2 4
SCALE IN FEET

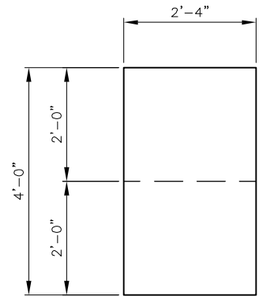

SECTION C AF09

2 1 0 2 4
SCALE IN FEET

FIELD BOOK:					
SURVEYED:					
SURVEY BASE MAP:					
DESIGN ENTERED: A. CHAPPELL	12/2009				
DESIGNED A. CHAPPELL	12/2009				
CHECKED: F. VESCI	12/2009				
SUPERVISOR: R. JOHNSON	01/2010	NUM.	REVISION	BY	DATE

RICHARD M. JOHNSON — STATE OF WASHINGTON — 43017 — REGISTERED PROFESSIONAL ENGINEER

HNTB

FED. AID No.

PROJECT No. 300197

SURVEY No. 32-24-4-22

MAINTENANCE DIVISION No. 3

Barbara Grygutis
Sculpture LLC

KING COUNTY DEPT. OF TRANSPORTATION
HAROLD TANIGUCHI, DIRECTOR

SOUTH PARK BRIDGE #3179 REPLACEMENT

ART FEATURE NORTH APPROACH FOOTING DETAILS

King County

AF09

SHEET 566 OF 667 SHEETS

316-63 (___)

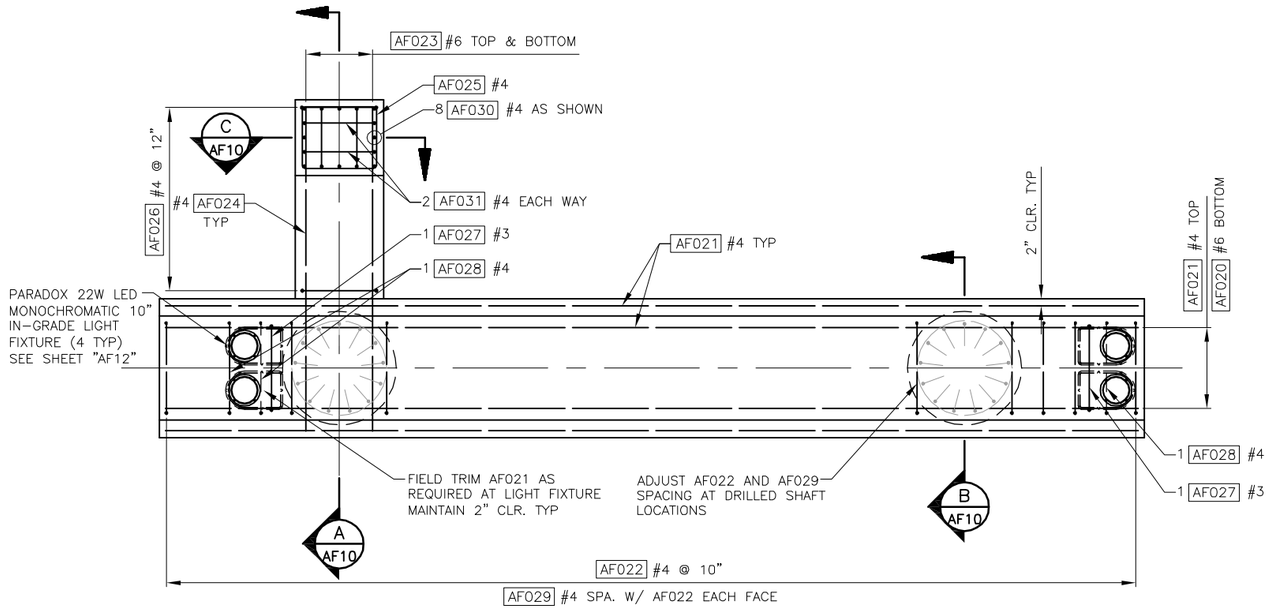

NORTH APPROACH - FOOTING REINFORCMENT PLAN

2 1 0 2 4
SCALE IN FEET

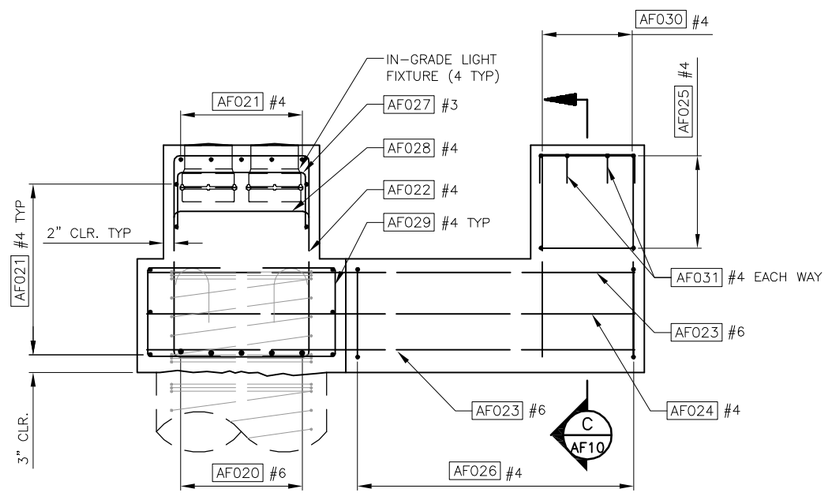

SECTION A / AF10

2 1 0 2 4
SCALE IN FEET

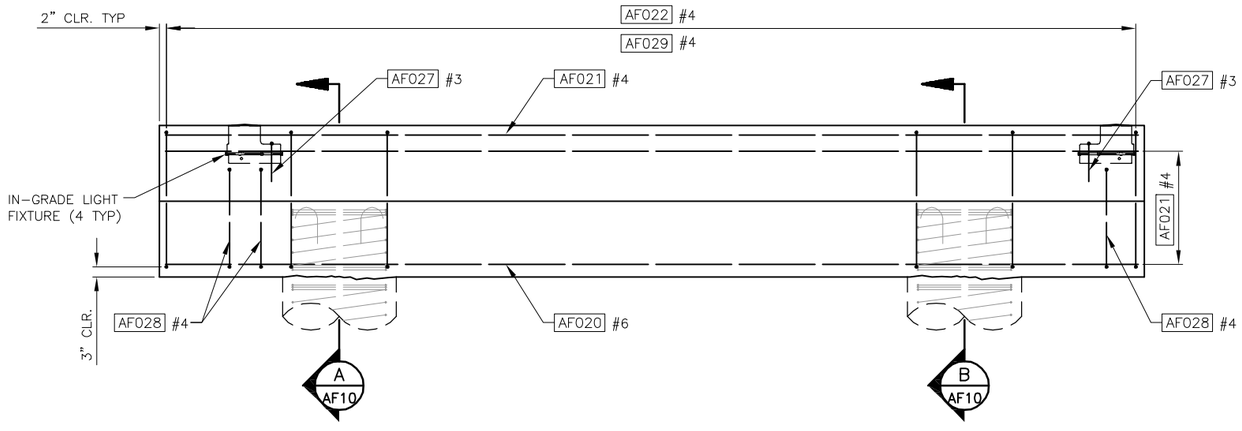

NORTH APPROACH - FOOTING REINFORCMENT ELEVATION

2 1 0 2 4
SCALE IN FEET

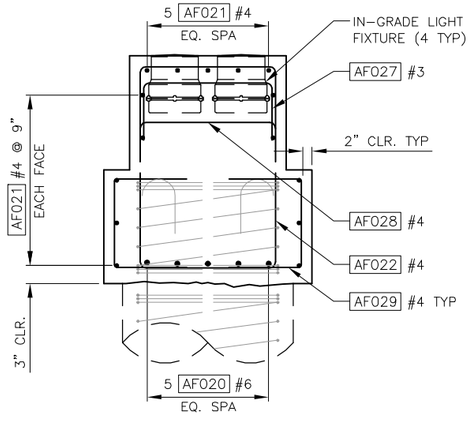

SECTION B / AF10

2 1 0 2 4
SCALE IN FEET

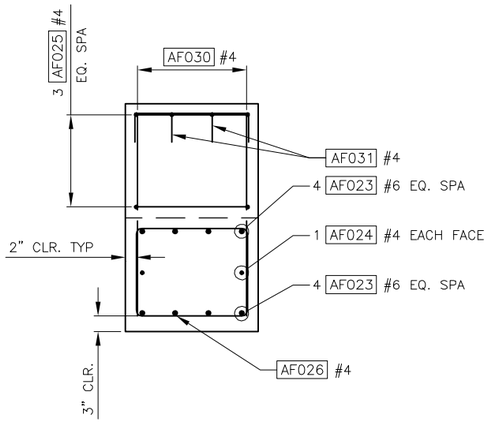

SECTION C / AF10

2 1 0 2 4
SCALE IN FEET

FIELD BOOK:					
SURVEYED:					
SURVEY BASE MAP:					
DESIGN ENTERED:	A. CHAPPELL	12/2009			
DESIGNED	A. CHAPPELL	12/2009			
CHECKED:	F. VESCI	12/2009			
SUPERVISOR:	R. JOHNSON	01/2010	NUM.	REVISION	BY / DATE

RICHARD M. JOHNSON — STATE OF WASHINGTON — 43017 — REGISTERED PROFESSIONAL ENGINEER

HNTB

FED. AID No.
PROJECT No. 300197
SURVEY No. 32-24-4-22
MAINTENANCE DIVISION No. 3

Barbara Grygutis Sculpture LLC

KING COUNTY DEPT. OF TRANSPORTATION
HAROLD TANIGUCHI, DIRECTOR

SOUTH PARK BRIDGE #3179 REPLACEMENT

ART FEATURE NORTH APPROACH FOOTING REINFORCEMENT

King County

AF10

SHEET 567 OF 667 SHEETS

316-63 (___)

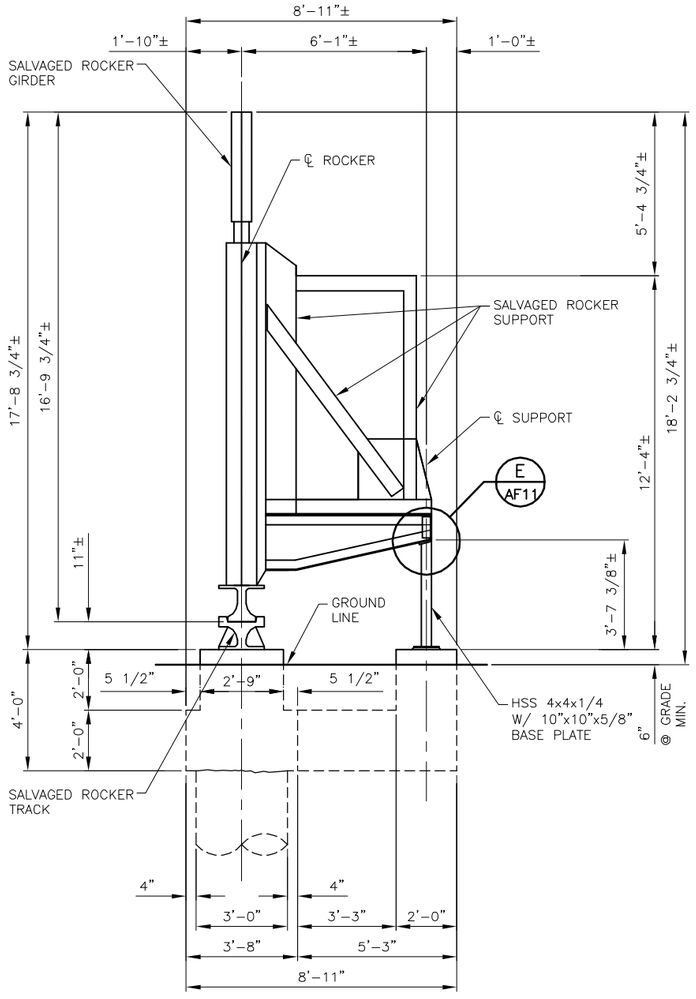

SECTION A AF08

2 1 0 2 4
SCALE IN FEET

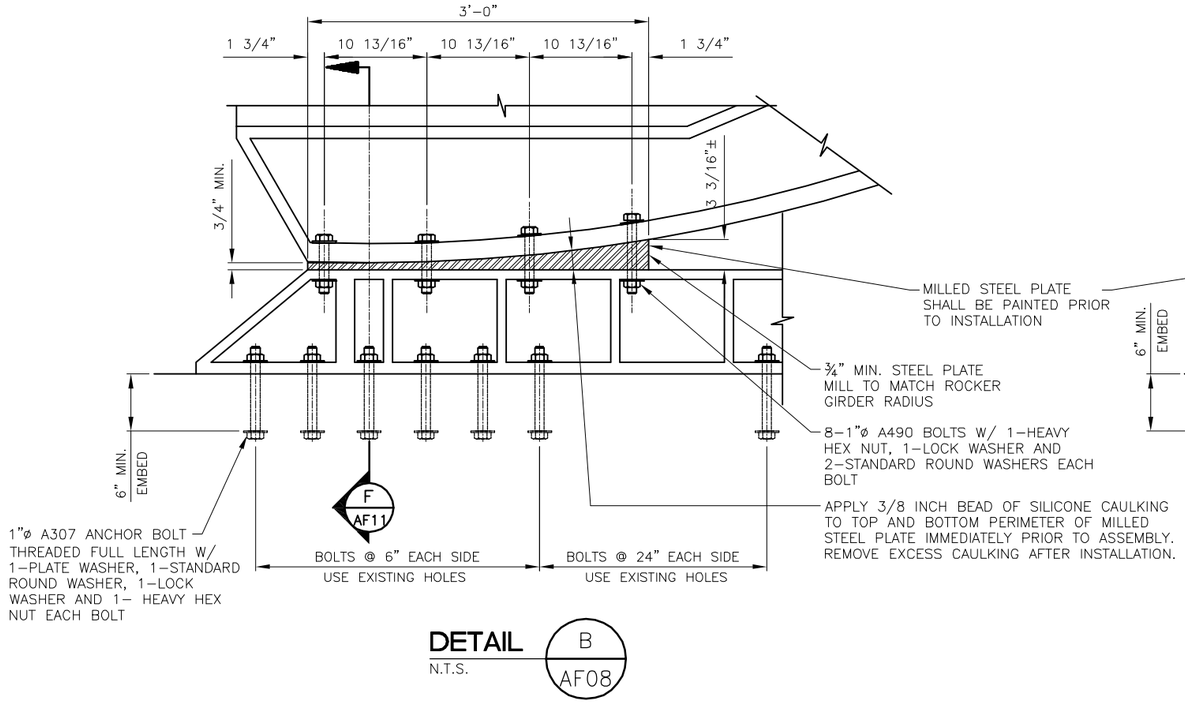

DETAIL B AF08
N.T.S.

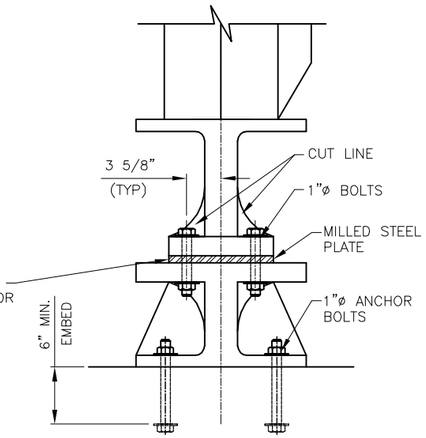

SECTION F AF11
N.T.S.

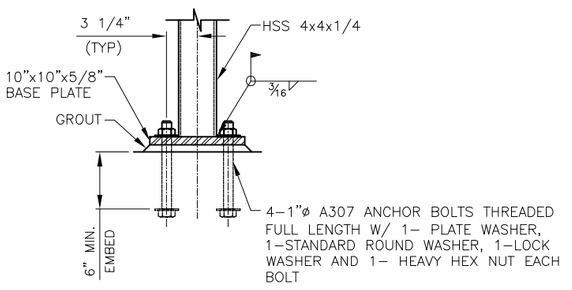

DETAIL C AF08
N.T.S.

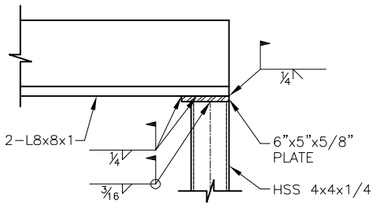

DETAIL D AF08
N.T.S.

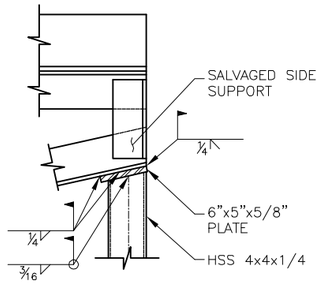

DETAIL E AF11
N.T.S.

FIELD BOOK:					
SURVEYED:					
SURVEY BASE MAP:					
DESIGN ENTERED:	A. CHAPPELL	12/2209			
DESIGNED	A. CHAPPELL	12/2009			
CHECKED:	F. VESCI	12/2009			
SUPERVISOR:	R. JOHNSON	01/2010	NUM.	REVISION	BY / DATE

RICHARD M. JOHNSON STATE OF WASHINGTON 43017 REGISTERED PROFESSIONAL ENGINEER

HNTB

FED. AID No.
PROJECT No. 300197
SURVEY No. 32-24-4-22
MAINTENANCE DIVISION No. 3

Barbara Grygutis Sculpture LLC

KING COUNTY DEPT. OF TRANSPORTATION
HAROLD TANIGUCHI, DIRECTOR

SOUTH PARK BRIDGE #3179 REPLACEMENT

ART FEATURE NORTH APPROACH SECTION AND DETAILS

King County

AF11

SHEET 568 OF 667 SHEETS

316-63 (___)

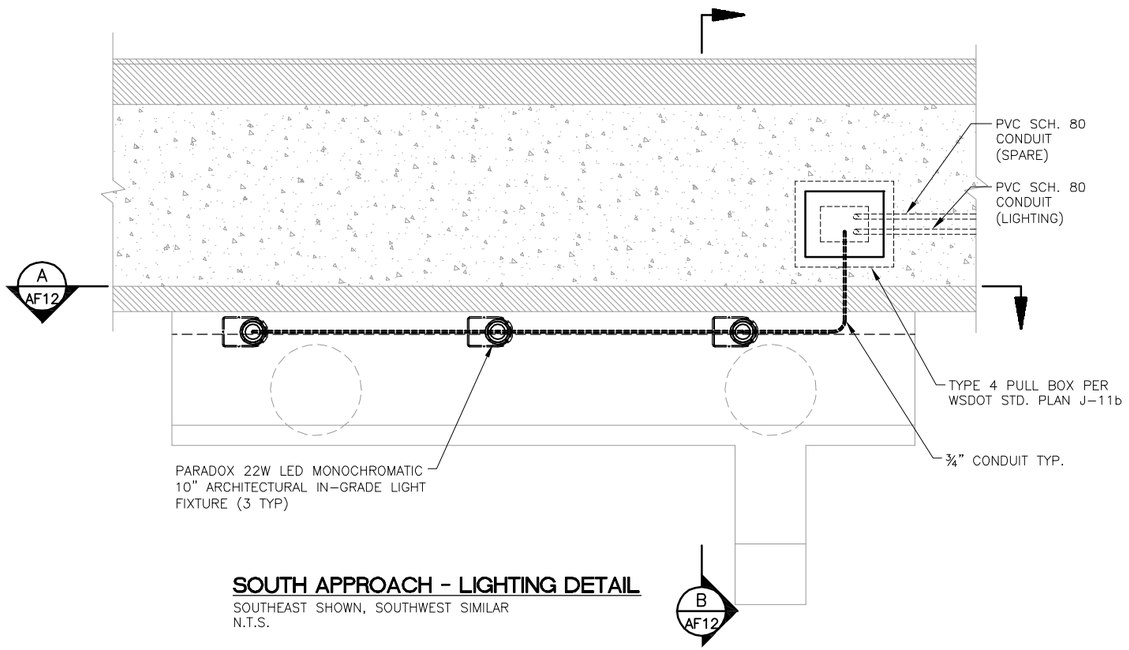

SOUTH APPROACH - LIGHTING DETAIL

SOUTHEAST SHOWN, SOUTHWEST SIMILAR
N.T.S.

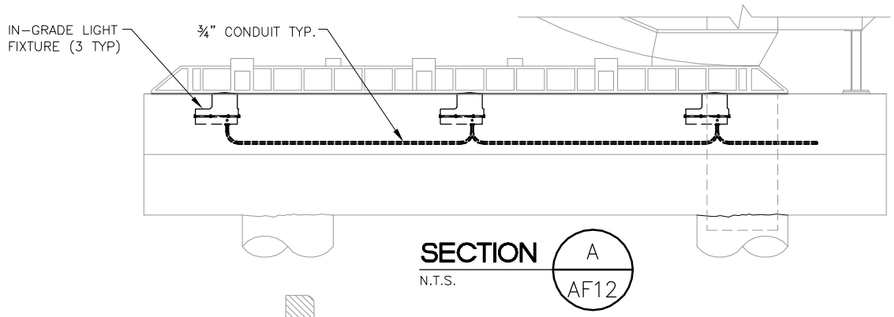

SECTION A / AF12

N.T.S.

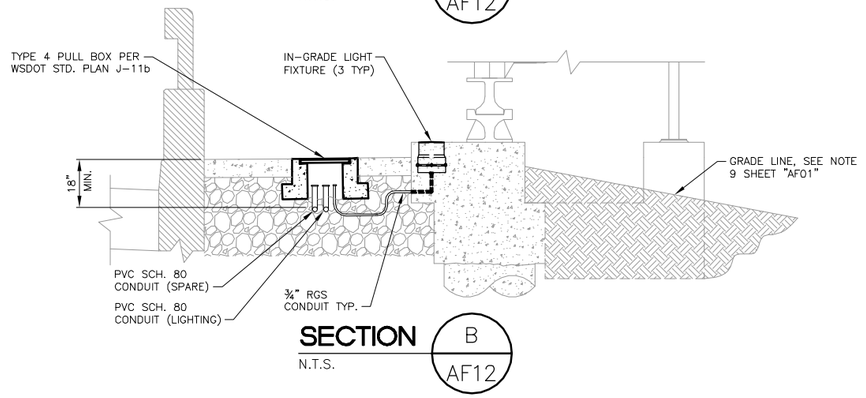

SECTION B / AF12

N.T.S.

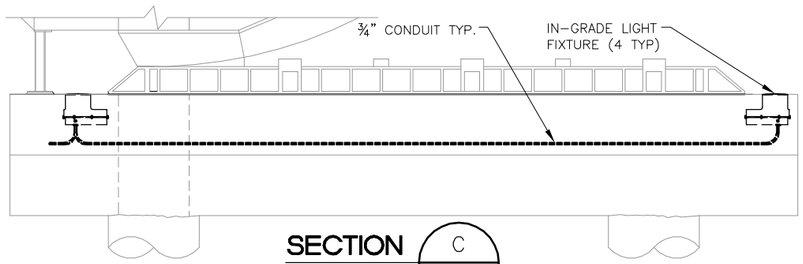

SECTION C / AF12

N.T.S.

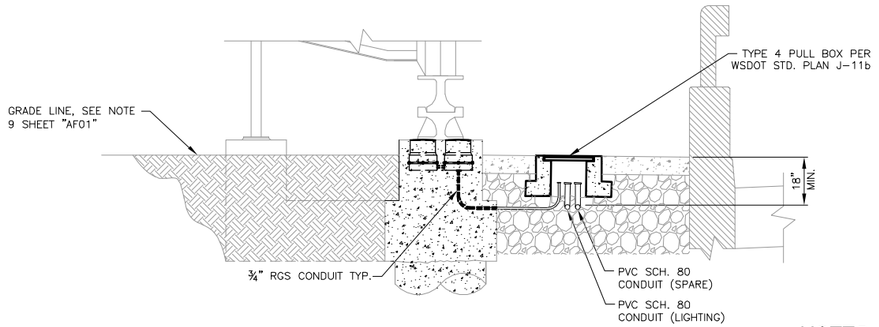

SECTION D / AF12

N.T.S.

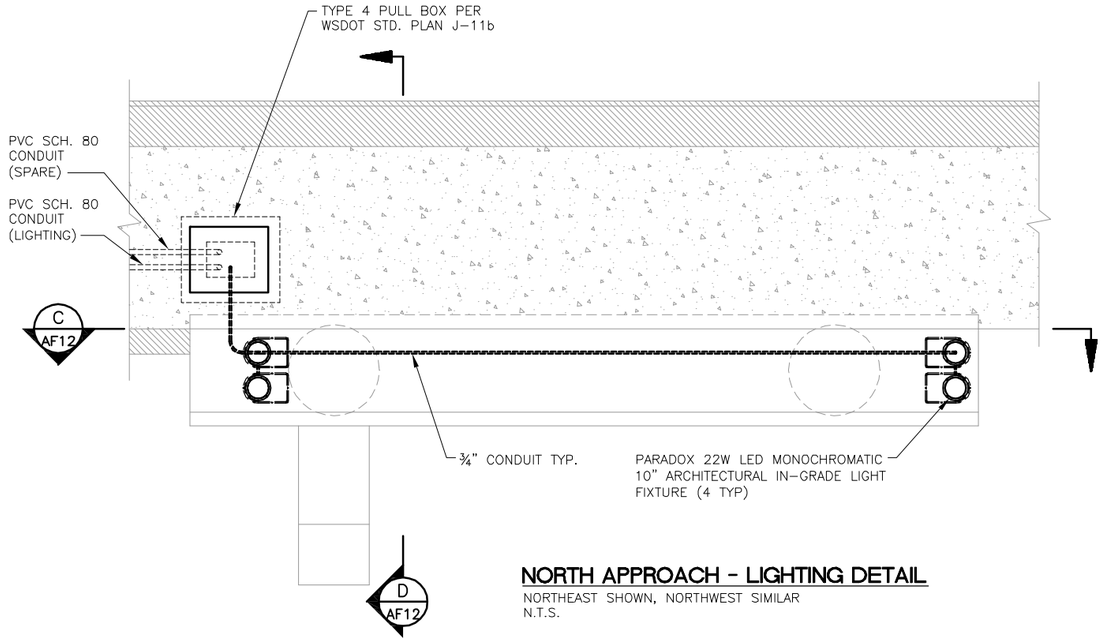

NORTH APPROACH - LIGHTING DETAIL

NORTHEAST SHOWN, NORTHWEST SIMILAR
N.T.S.

NOTES:

1. CONTRACTOR SHALL INSTALL PARADOX 22W LED MONOCHROMATIC 10" ARCHITECTURAL IN-GRADE LIGHT FIXTURE AND ASSOCIATED CONDUITS AND WIRING AS PER MANUFACTURER SPECIFICATIONS.

FIELD BOOK:					
SURVEYED:					
SURVEY BASE MAP:					
DESIGN ENTERED:	A. CHAPPELL	12/2009			
DESIGNED	A. CHAPPELL	12/2009			
CHECKED:	F. VESCI	12/2009			
SUPERVISOR:	R. JOHNSON	01/2010	NUM.	REVISION	BY / DATE

RICHARD M. JOHNSON — STATE OF WASHINGTON — 43017 — REGISTERED PROFESSIONAL ENGINEER

HNTB

FED. AID No.

PROJECT No. 300197

SURVEY No. 32-24-4-22

MAINTENANCE DIVISION No. 3

Barbara Grygutis
Sculpture LLC

KING COUNTY DEPT. OF TRANSPORTATION
HAROLD TANIGUCHI, DIRECTOR

SOUTH PARK BRIDGE #3179 REPLACEMENT

ART FEATURE LIGHTING DETAILS

King County

AF12

SHEET 569 OF 667 SHEETS

316-63 (___)

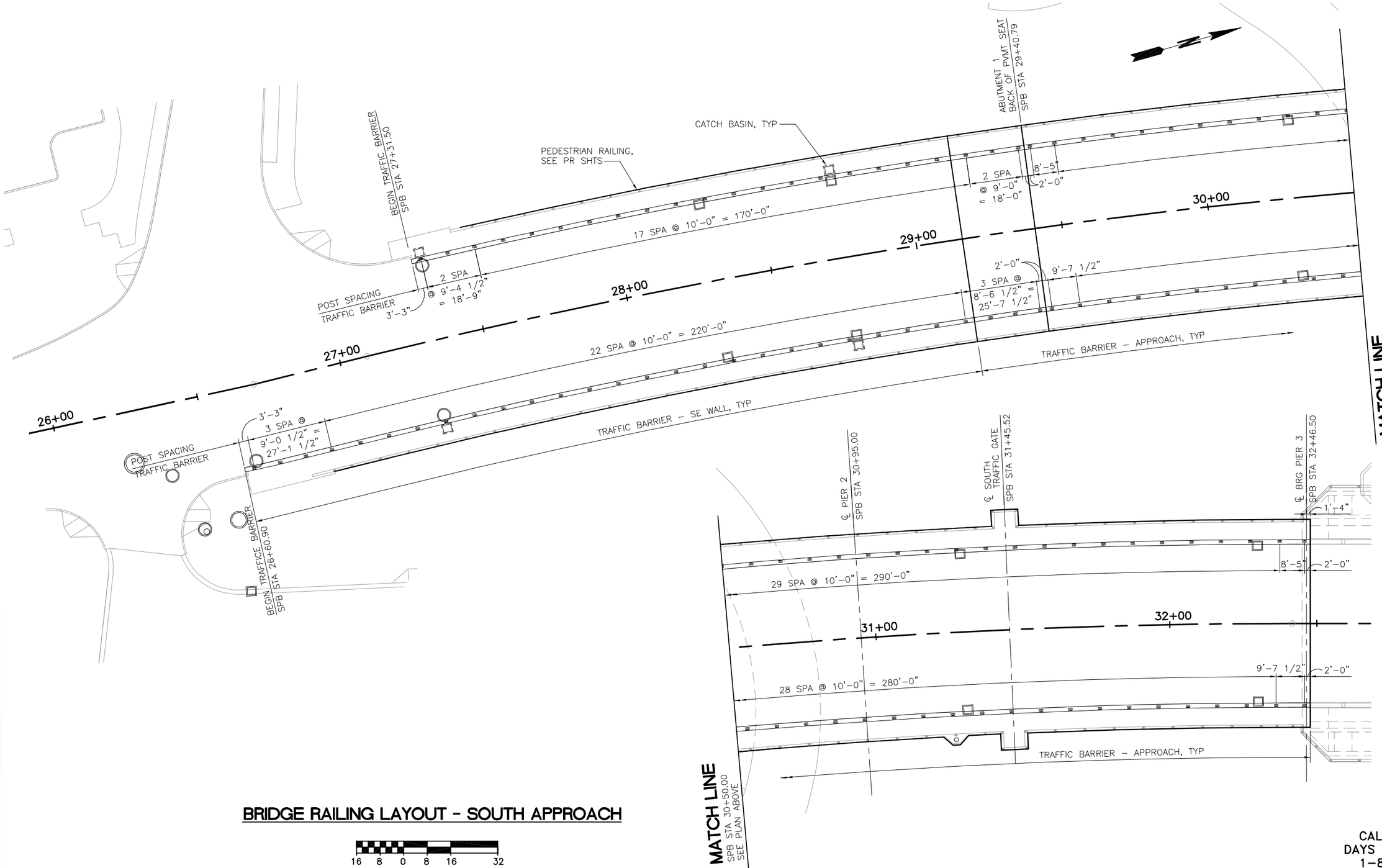

BRIDGE RAILING LAYOUT - SOUTH APPROACH

16 8 0 8 16 32
SCALE IN FEET

CALL 2 WORKING
DAYS BEFORE YOU DIG
1-800-424-5555
(UNDERGROUND UTILITY LOCATIONS ARE APPROX.)

FIELD BOOK:			
SURVEYED:			
SURVEY BASE MAP:			
DESIGN ENTERED:	D. LESLIE	06/2009	
DESIGNED	L. CAMPBELL	06/2009	
CHECKED:	J. MARAS	10/2009	
SUPERVISOR:	Y. SU	01/2010	

NUM.	REVISION	BY	DATE

YUAN-AN SU
STATE OF WASHINGTON
29156
STRUCTURAL ENGINEER
PROFESSIONAL ENGINEER

ABKJ
ANDERSEN • BJORNSTAD • KANE • JACOBS

FED. AID No.

PROJECT No. 300197
SURVEY No. 32-24-4-22

MAINTENANCE DIVISION No. 3

KING COUNTY DEPT. OF TRANSPORTATION
HAROLD TANIGUCHI, DIRECTOR

SOUTH PARK BRIDGE #3179 REPLACEMENT

TRAFFIC BARRIER LAYOUT – SOUTH APPROACH

King County

TR05

SHEET 570 OF 667 SHEETS

316-63

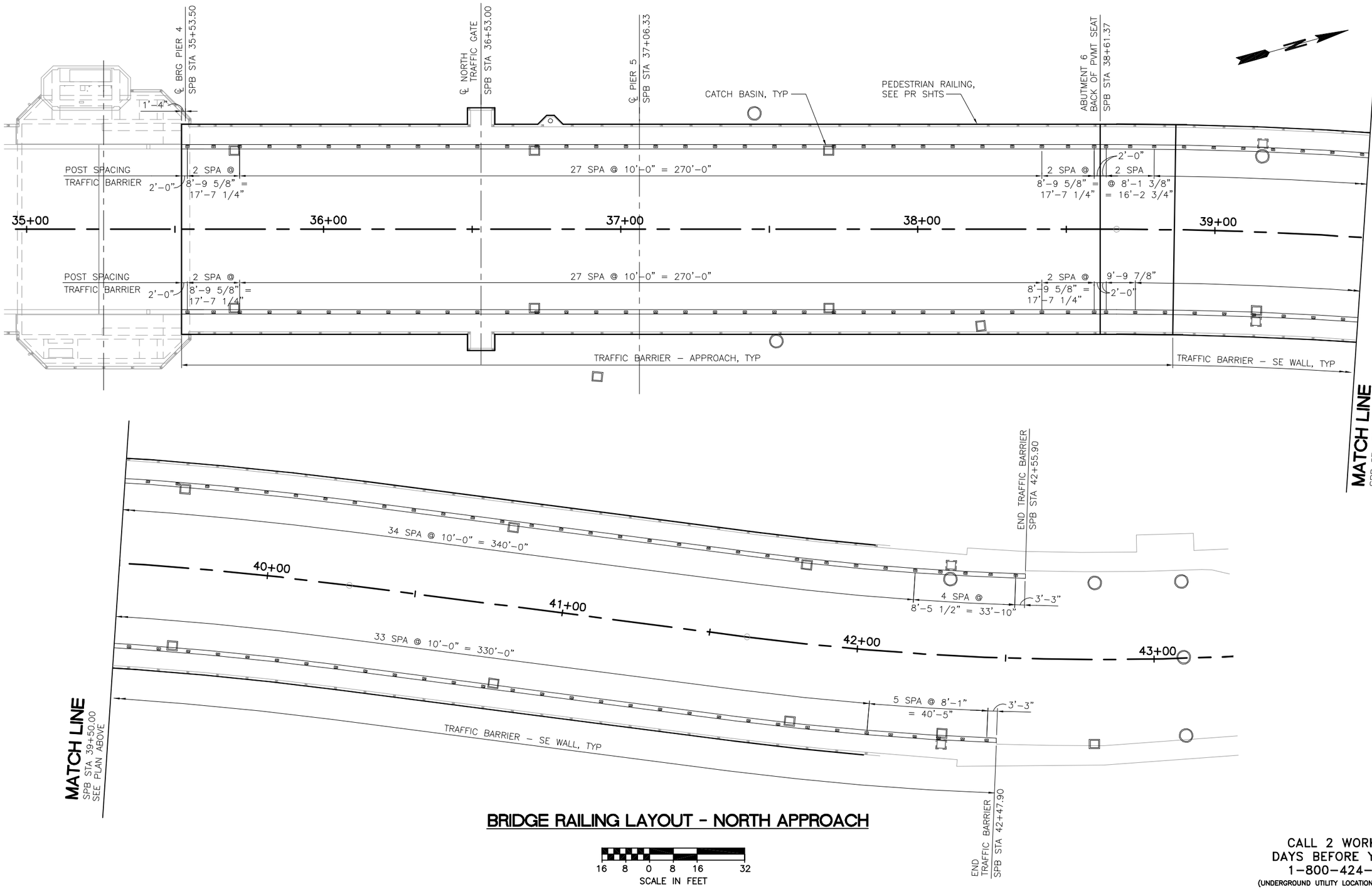

BRIDGE RAILING LAYOUT - NORTH APPROACH

16 8 0 8 16 32
SCALE IN FEET

CALL 2 WORKING DAYS BEFORE YOU DIG
1-800-424-5555
(UNDERGROUND UTILITY LOCATIONS ARE APPROX.)

FIELD BOOK:					
SURVEYED:					
SURVEY BASE MAP:					
DESIGN ENTERED:	D. LESLIE	06/2009			
DESIGNED	L. CAMPBELL	06/2009			
CHECKED:	J. MARAS	10/2009			
SUPERVISOR:	Y. SU	01/2010	NUM.	REVISION	BY / DATE

YUAN-AN SU · STATE OF WASHINGTON · 29156 · STRUCTURAL ENGINEER · PROFESSIONAL ENGINEER

ABKJ
ANDERSEN • BJORISTAD • KANE • JACOBS

FED. AID No.
PROJECT No. 300197
SURVEY No. 32-24-4-22
MAINTENANCE DIVISION No. 3

KING COUNTY DEPT. OF TRANSPORTATION
HAROLD TANIGUCHI, DIRECTOR

SOUTH PARK BRIDGE #3179 REPLACEMENT

TRAFFIC BARRIER LAYOUT– NORTH APPROACH

King County

TR06
SHEET 571 OF 667 SHEETS
316-63

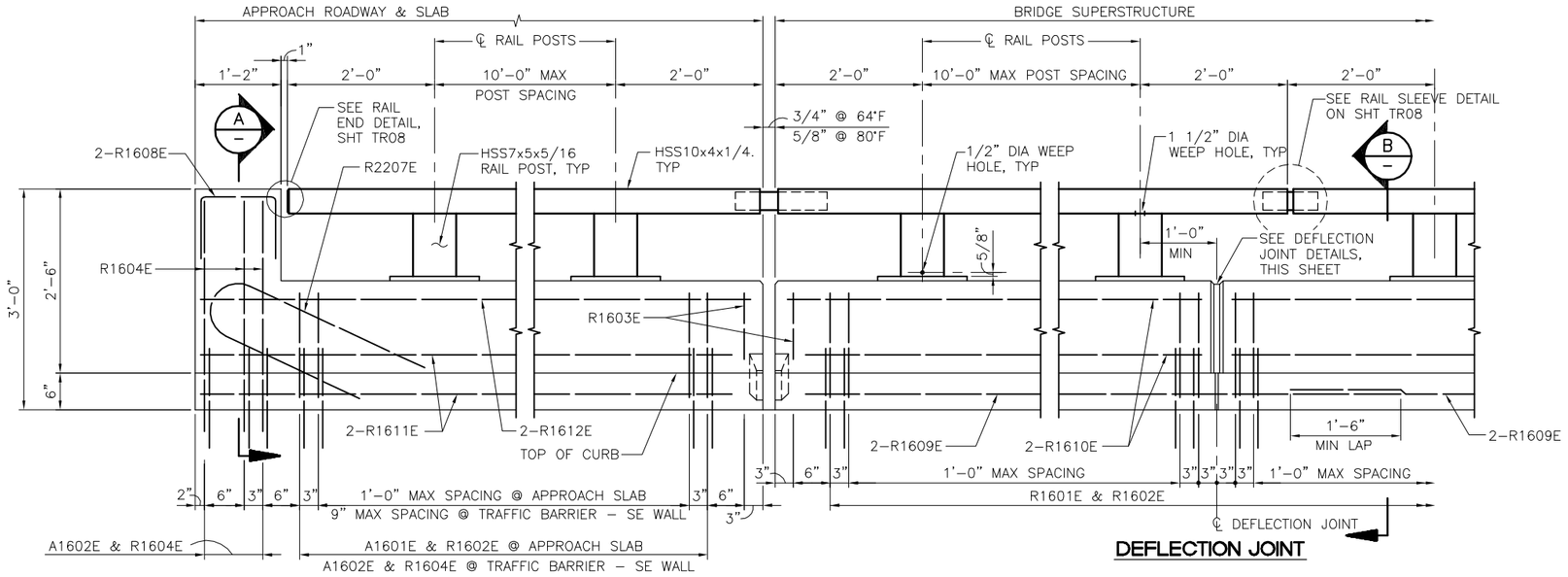

DEFLECTION JOINT

EXPANSION JOINT

DEVICE NOT SHOWN

INSIDE ELEVATION OF RAILING

CONCRETE WEARING COURSE NOT SHOWN

RAIL MEETS TEST LEVEL 4 REQUIREMENTS OF NCHRP REPORT 350

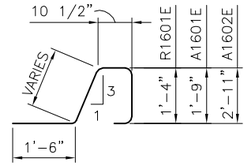

R1601E, A1601E AND A1602E

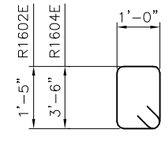

R1602E AND R1604E

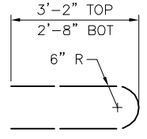

R2207E

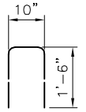

R1608E

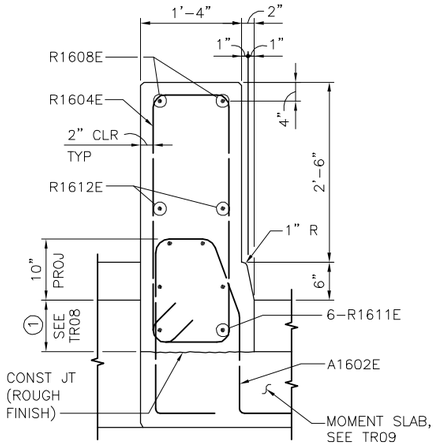

SECTION A-A

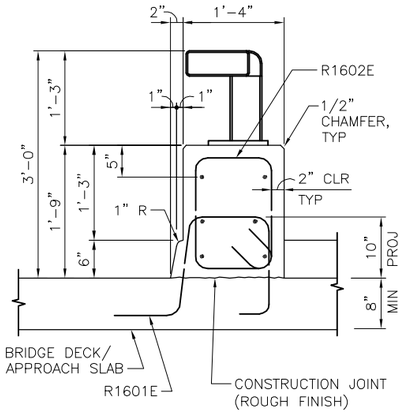

SECTION B-B

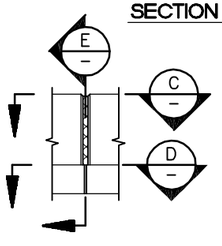

ELEVATION

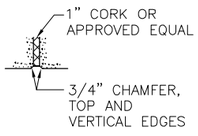

SECTION C-C

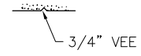

SECTION D-D

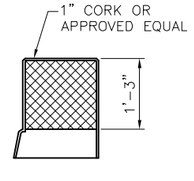

SECTION E-E

BILL OF REINFORCEMENT FOR PARAPET

BAR	SIZE	NO.	LENGTH	SHAPE	LOCATION
R1601E	#5	PER PLAN	5'-7"	BENT	PARAPET VERTICAL
R1602E	#5	PER PLAN	5'-9"	BENT	PARAPET VERTICAL
R1604E	#5	12	9'-11"	BENT	PARAPET VERTICAL
R2207E	#7	4 SETS OF 2	6'-5"	BENT	PARAPET END
R1608E	#5	8	3'-10"	BENT	PARAPET LONGITUDINAL, RAMP
R1609E	#5	-	-	STRAIGHT	PARAPET LONGITUDINAL, BRIDGE DECK
R1610E	#5	-	-	STRAIGHT	PARAPET LONGITUDINAL, BRIDGE DECK
R1611E	#5	-	-	STRAIGHT	PARAPET LONGITUDINAL, SE WALL
R1612E	#5	-	-	STRAIGHT	PARAPET LONGITUDINAL, SE WALL
A1601E	#5	PER PLAN	6'-6"	BENT	PARAPET VERTICAL, APPROACH SLAB
A1602E	#5	PER PLAN	9'-1"	BENT	PARAPET VERTICAL, SE WALL

GENERAL NOTES

1. LENGTH OF "TRAFFIC BARRIER-APPROACH" FOR PAYMENT SHALL BE MEASURED BETWEEN THE OUTSIDE FACES OF THE CONCRETE PARAPET AND "TRAFFIC BARRIER-SE WALL". THE STRUCTURAL TUBE RAILING SHALL BE INCLUDED TO THE ASSOCIATED CONCRETE PARAPET TO WHICH THE RAILING IS ATTACHED.
2. RAIL SLEEVE SPLICES FOR EXPANSION MUST BE PROVIDED AT 25 FT MAX INTERVALS THROUGHOUT THE RAILING. STRUCTURAL TUBE RAILING SHALL BE CONTINUOUS OVER 2 POSTS MINIMUM.
3. RAILING SHALL BE FABRICATED TO THE HORIZONTAL AND VERTICAL ALIGNMENT OF THE STRUCTURE. POSTS SHALL BE PLACED NORMAL TO THE GRADE. ANCHORAGES SHALL BE ACCURATELY PLACED AND SUPPORTED TO PROVIDE CORRECT ALIGNMENT OF RAILING NORMAL TO GRADE.
4. FINISH ALL EDGES OF RAIL WITH 1/2" VEE, EXCEPT WHERE OTHERWISE NOTED.
5. MAXIMUM SPACING OF CONCRETE DEFLECTION JOINTS SHALL BE 20 FEET.
6. SEE TRAFFIC BARRIER LAYOUT SHEET FOR POST SPACING.
7. ALL BARS IN AND ASSOCIATED TO THE CONCRETE PARAPET SHALL BE EPOXY COATED.
8. SEE TR08 FOR STRUCTURAL TUBE RAIL DETAILS.

DEFLECTION JOINT DETAILS

FIELD BOOK:					
SURVEYED:					
SURVEY BASE MAP:					
DESIGN ENTERED:	D. LESLIE	06/2009			
DESIGNED	Y. SU	06/2009			
CHECKED:	J. MARAS	10/2009			
SUPERVISOR:	Y. SU	01/2010	NUM.	REVISION	BY / DATE

STATE OF WASHINGTON · JUAN · AN SU · 29156 · STRUCTURAL ENGINEER · PROFESSIONAL ENGINEER

ABKJ ANDERSEN • BJORNSTAD • KANE • JACOBS

FED. AID No.

PROJECT No. 300197

SURVEY No. 32-24-4-22

MAINTENANCE DIVISION No. 3

KING COUNTY DEPT. OF TRANSPORTATION
HAROLD TANIGUCHI, DIRECTOR

SOUTH PARK BRIDGE #3179 REPLACEMENT

TRAFFIC BARRIER - APPROACHES

King County

TR07

SHEET 572 OF 667 SHEETS

316-63

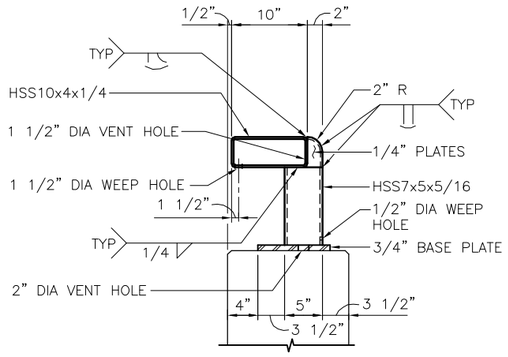

STRUCTURAL TUBE RAIL DETAIL

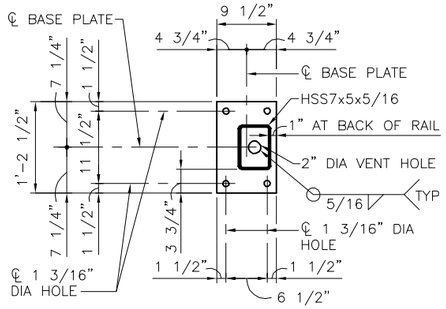

BASE PLATE

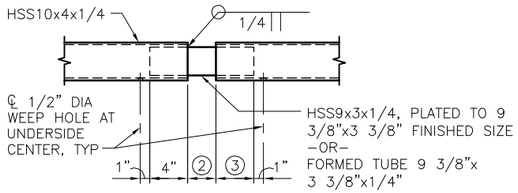

RAIL SLEEVE DETAIL

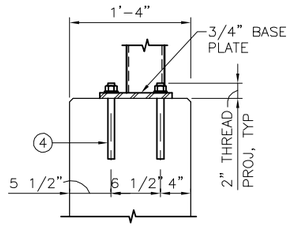

ANCHOR DETAIL

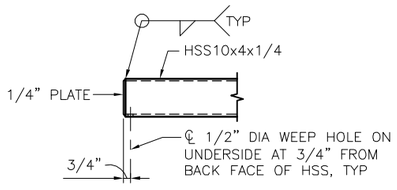

RAIL END DETAIL

GENERAL NOTES FOR STRUCTURAL TUBE RAILING

1. STRUCTURAL STEEL SHALL CONFORM TO AASHTO M270 GRADE 50, UNLESS NOTED OTHERWISE. STRUCTURAL TUBES (HOLLOW STRUCTURAL SECTIONS, HSS) ARE ASTM A500, GRADE B, A618 OR A501.
2. GALVANIZE BOLTS, NUTS, AND WASHERS PER AASHTO M232. GALVANIZE ALL OTHER STRUCTURAL STEEL PER AASHTO M111 AFTER FABRICATION.
3. GUARDRAIL CONNECTION TO BE STRUCTURAL STEEL, AASHTO M183 GRADE 36 (ASTM A36).
4. GUARDRAIL CONNECTION AND NAME PLATE TO BE CONSIDERED INCIDENTAL TO THE ASSOCIATED TRAFFIC BARRIER INVOLVED.
5. SEE SPECIAL PROVISIONS FOR PAINT REQUIREMENTS.

(1) THICKNESS TO BE THE SAME AS 12" CCP ROADWAY SECTION.

(2) 1" AT DEFLECTION JOINTS AND VARIES AT EXPANSION JOINTS (SHALL BE 1" LARGER THAN GAP IN BRIDGE EXPANSION JOINT).

(3) 4" AT DEFLECTION JOINTS AND 8" AT EXPANSION JOINTS.

(4) 1" DIAMETER RESIN BONDED ANCHORS WITH HEX NUTS AND WASHERS. MINIMUM ULTIMATE BOND STRENGTH SHALL BE 41,000 POUNDS, WITH A MINIMUM 9" EMBEDMENT LENGTH.

FIELD BOOK:		
SURVEYED:		
SURVEY BASE MAP:		
DESIGN ENTERED:	D. LESLIE	06/2009
DESIGNED	Y. SU	06/2009
CHECKED:	J. MARAS	10/2009
SUPERVISOR:	Y. SU	01/2010

NUM.	REVISION	BY	DATE

YUAN-AN SU STATE OF WASHINGTON 29156 STRUCTURAL ENGINEER PROFESSIONAL ENGINEER

ABKJ ANDERSEN • BJORNSTAD • KANE • JACOBS

FED. AID No.

PROJECT No. 300197

SURVEY No. 32-24-4-22

MAINTENANCE DIVISION No. 3

KING COUNTY DEPT. OF TRANSPORTATION

HAROLD TANIGUCHI, DIRECTOR

SOUTH PARK BRIDGE #3179 REPLACEMENT

TRAFFIC BARRIER – RAILING DETAILS

King County

TR08

SHEET 573 OF 667 SHEETS

316-63

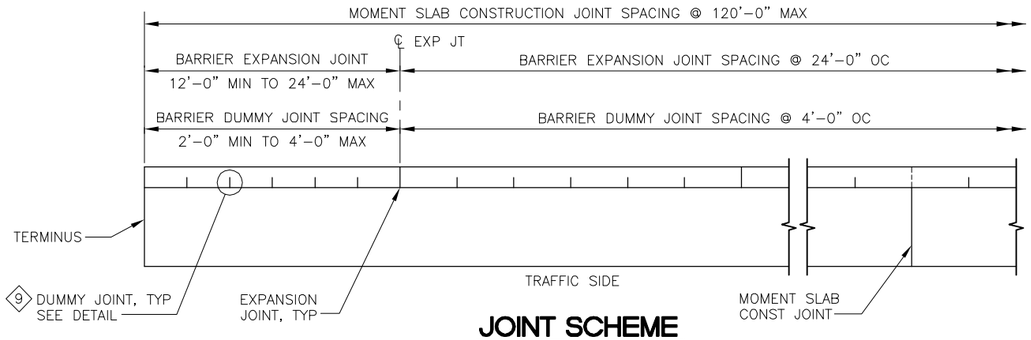

JOINT SCHEME

PLAN VIEW

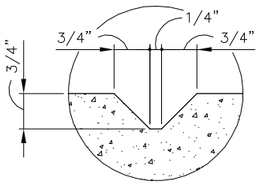

DUMMY JOINT DETAIL

MOMENT SLAB TABLE	
SLAB LENGTH	SLAB BASE AT GRADE
GREATER THAN 80'-0"	5'-0"
BETWEEN 60'-0" & 80'-0"	6'-0"
BETWEEN 40'-0" & 60'-0"	7'-0"

KEY NOTES:

1. THE BARRIER GEOMETRY REFERENCE LINE (BGRL) IS PERPENDICULAR TO THE TRANSVERSE ROADWAY SLOPE (TRS). FOR SUPERELEVATED TRANSVERSE ROADWAY SLOPES, THE BGRL ON THE LOW SIDE OF THE ROADWAY SHALL BE PERPENDICULAR TO THE TRS UP TO A MAXIMUM OF 8% SUPERELEVATION; THE BGRL ON THE HIGH SIDE SHALL ALWAYS BE PERPENDICULAR TO THE TRS.
2. NOT USED
3. 1 1/2" MINIMUM CONCRETE COVER : INCREASE THE COVER AS REQUIRED TO ACCOMMODATE ARCHITECTURAL FEATURES AND FINISH.
4. CONSTRUCTION JOINT WITH ROUGHENED SURFACE
5. NOT USED
6. NOT USED
7. NOT USED
8. 1/2" EXPANSION JOINT WITH PREMOLDED JOINT FILLER
9. INSTALL BARRIER DUMMY JOINTS ON TRAFFIC SIDE ONLY WHEN ARCHITECTURAL FEATURES ARE SPECIFIED.

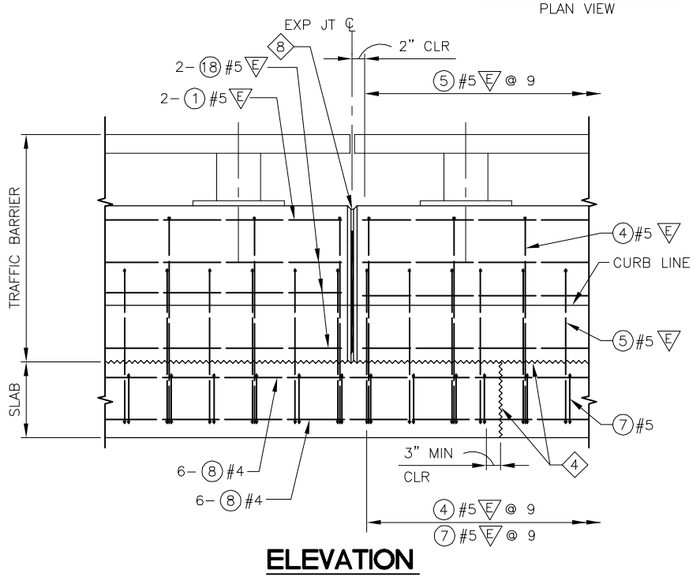

ELEVATION

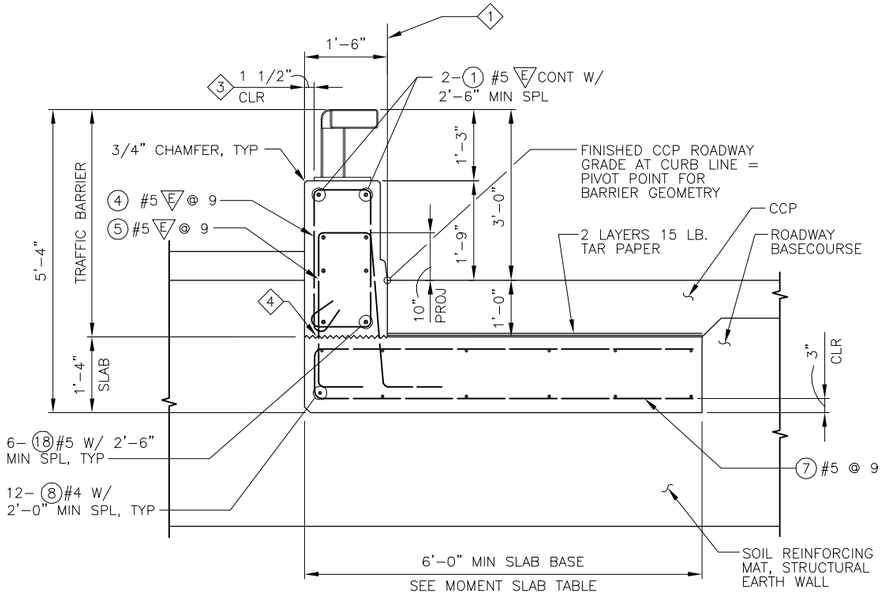

TYPICAL SECTION

SHOWN ON EMBANKMENT W/ SEW

REINFORCING STEEL BENDING DIAGRAM

ALL REINFORCING BARS SHOWN ON THIS PLAN SHALL BE AASHTO M 31 UNLESS OTHERWISE NOTED.

ALL DIMENSIONS ARE OUT TO OUT

E = EPOXY COATED

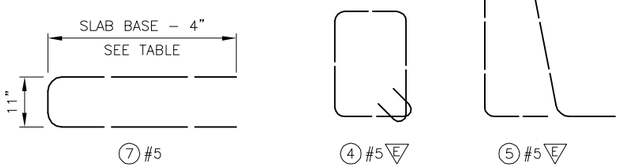

NOTE: SEE SHEET TR07 FOR BAR DIMENSIONS.

FIELD BOOK:					
SURVEYED:					
SURVEY BASE MAP:					
DESIGN ENTERED:	D. LESLIE	06/2009			
DESIGNED	L. CAMPBELL	06/2009			
CHECKED:	J. MARAS	10/2009			
SUPERVISOR:	Y. SU	01/2010	NUM.	REVISION	BY / DATE

YUAN-AN SU STATE OF WASHINGTON 29156 STRUCTURAL ENGINEER PROFESSIONAL ENGINEER

ABKJ ANDERSEN • BJORISTAD • KANE • JACOBS

FED. AID No.

PROJECT No. 300197

SURVEY No. 32-24-4-22

MAINTENANCE DIVISION No. 3

KING COUNTY DEPT. OF TRANSPORTATION
HAROLD TANIGUCHI, DIRECTOR

SOUTH PARK BRIDGE #3179 REPLACEMENT

TRAFFIC BARRIER – SEW

King County

316-63

TR09

SHEET 574 OF 667 SHEETS

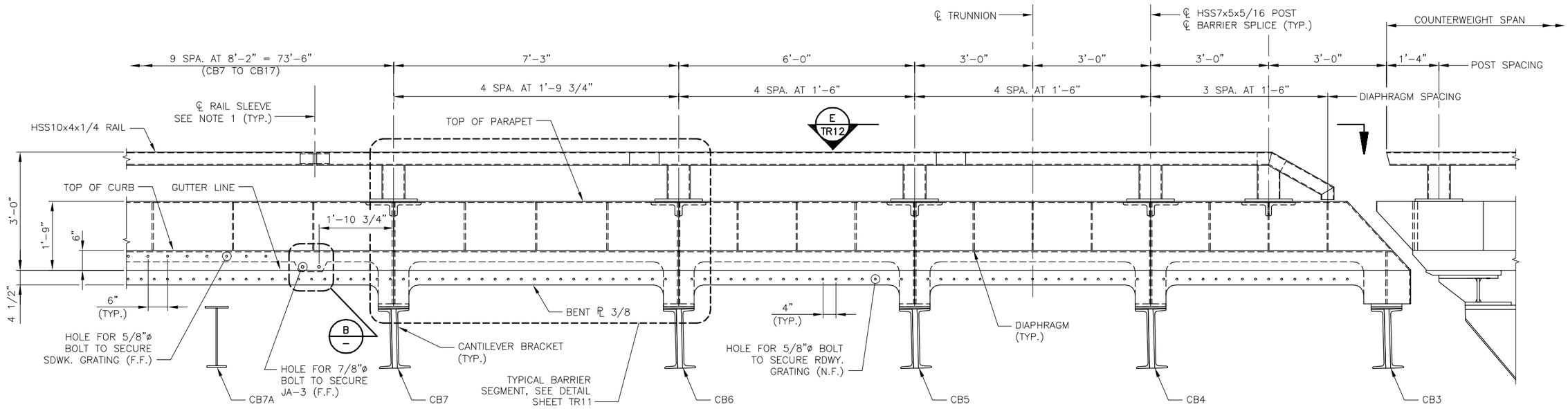

TRAFFIC BARRIER - PARTIAL ELEVATION

(ROADWAY FACE SHOWN)

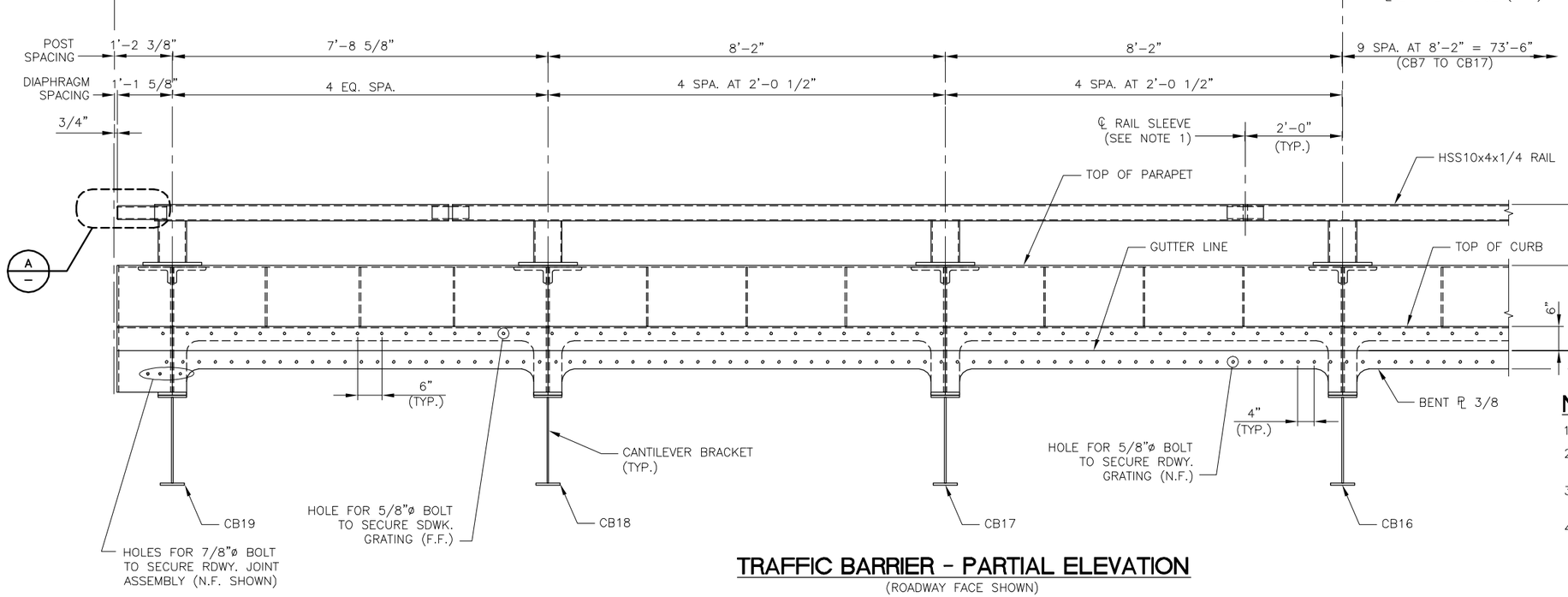

TRAFFIC BARRIER - PARTIAL ELEVATION

(ROADWAY FACE SHOWN)

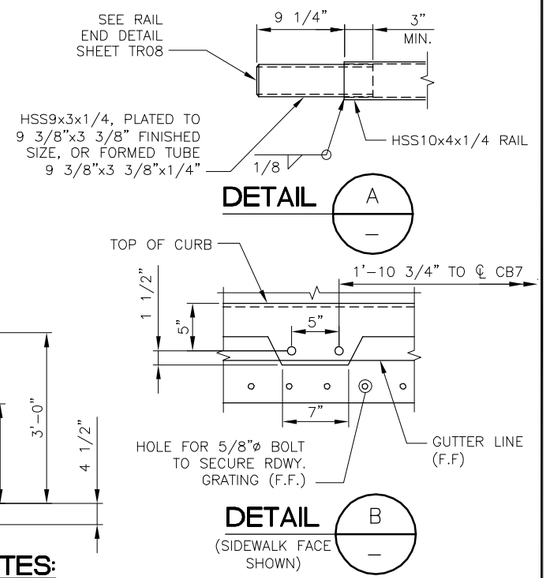

NOTES:

1. FOR STRUCTURAL TUBE RAIL DETAILS, SEE SHEET TR08.
2. FOR TRAFFIC BARRIER DETAILS AT THE COUNTERWEIGHT SPAN, SEE SHEET TR13.
3. DIMENSIONS SHOWN ALONG LENGTH OF BARRIER ARE MEASURED HORIZONTALLY.
4. FOR ROADWAY AND SIDEWALK GRATING DETAILS, SEE SHEETS BL58 TO BL61. WHERE BOLTS CONFLICT WITH END DIAPHRAGMS AT BARRIER SPLICES, SPACING MAY BE ADJUSTED 1" MAX. IN EITHER DIRECTION AS NEED TO PERMIT INSTALLATION. WHERE THE CONFLICT IS NOT RESOLVED BY THIS ADJUSTMENT, A SINGLE BOLT MAY BE OMITTED.

FIELD BOOK:					
SURVEYED:					
SURVEY BASE MAP:					
DESIGN ENTERED:	D. SANTORO	01/2010			
DESIGNED	T. ZONG	01/2010			
CHECKED:	T. MCAULIFFE	01/2010			
SUPERVISOR:	T. ZOLI	01/2010	NUM.	REVISION	BY / DATE

TIE ZONG — STATE OF WASHINGTON — 20371 — STRUCTURAL ENGINEER — PROFESSIONAL ENGINEER

HNTB

FED. AID No. _____

PROJECT No. 300197

SURVEY No. 32-24-4-22

MAINTENANCE DIVISION No. 3

ALL SHEETS OF THESE PLANS SHALL BE DEEMED APPROVED BY THE SIGNATURE AND STAMP ON COVER SHEET.

KING COUNTY DEPT. OF TRANSPORTATION
HAROLD TANIGUCHI, DIRECTOR

SOUTH PARK BRIDGE #3179 REPLACEMENT

BASCULE SPAN
TRAFFIC BARRIER DETAILS – 1

King County

TR10

SHEET 575 OF 667 SHEETS

316-63 (___)

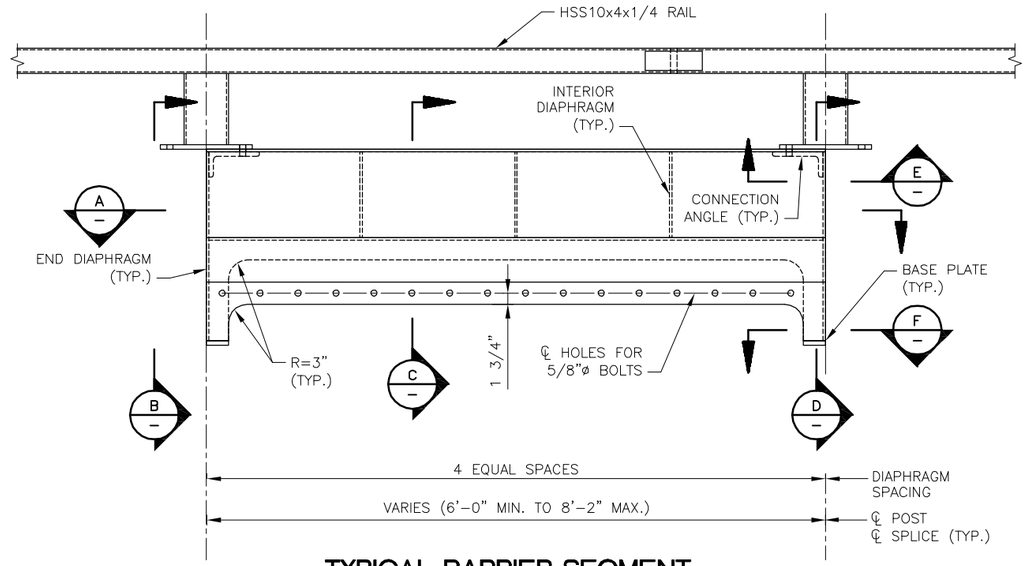

TYPICAL BARRIER SEGMENT

(ROADWAY FACE SHOWN)

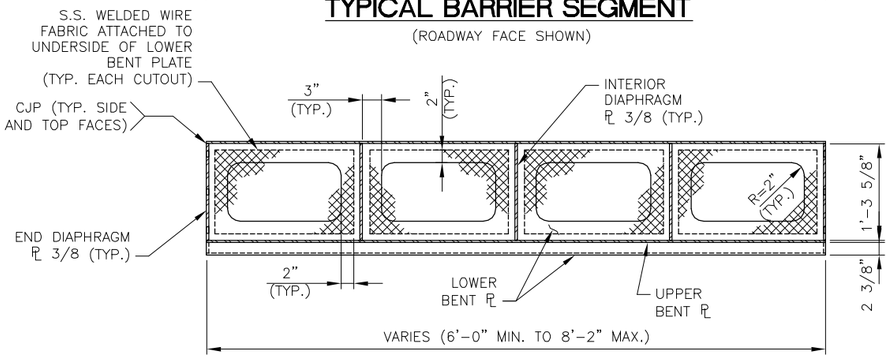

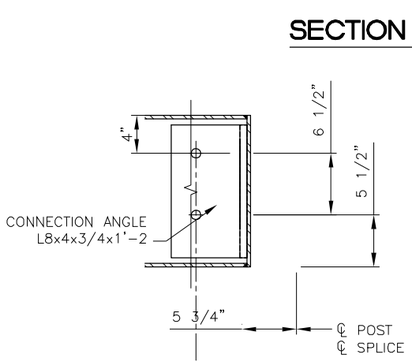

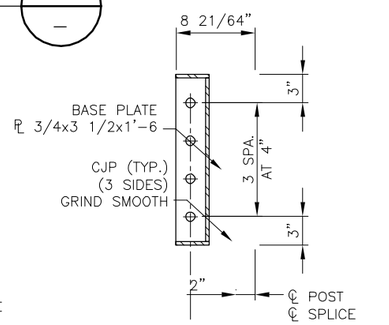

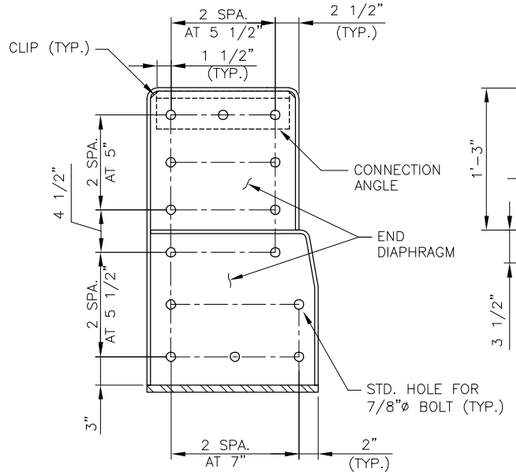

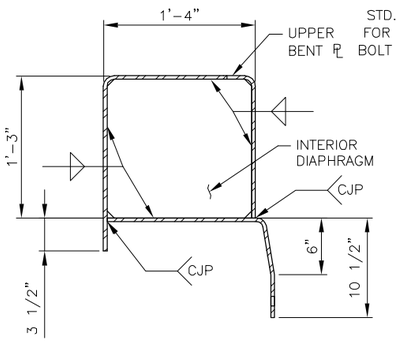

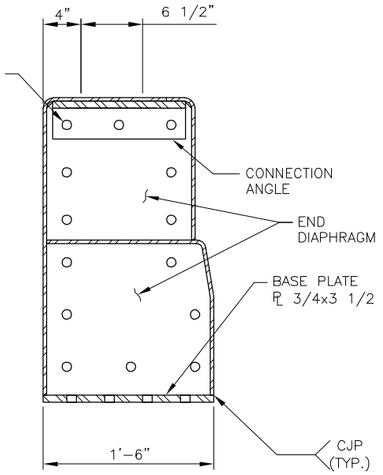

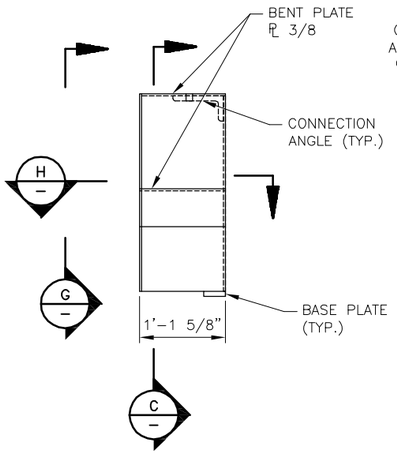

END BARRIER SEGMENT AT FORWARD JOINT

(ROADWAY FACE SHOWN, RAIL NOT SHOWN)

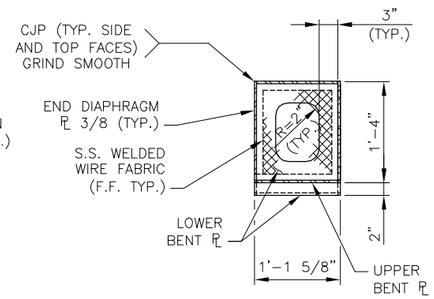

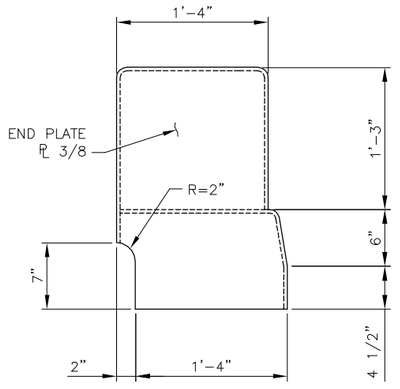

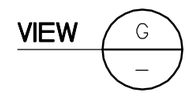

NOTES:

1. FOR ADDITIONAL NOTES, SEE SHEET TR10.
2. FOR GENERAL NOTES, SEE SHEET BG05.
3. FOR RAIL AND POST DETAILS, SEE SHEETS TR07, TR08, AND TR12.
4. FOR CANTILEVER BRACKET DETAILS, SEE SHEETS BL17 TO BL19.
5. FOR ROADWAY AND SIDEWALK GRATING DETAILS, SEE SHEETS BL58 TO BL61.
6. DIMENSION SHOWN ARE HORIZONTAL AND VERTICAL. TRAFFIC BARRIER SHALL BE FABRICATED AND INSTALLED TO THE HORIZONTAL AND VERTICAL ALIGNMENT OF THE STRUCTURE. POST SHALL BE NORMAL TO GRADE. DETAILS MAY BE ALTERED TO FACILITATE FABRICATION AND INSTALLATION, SUBJECT TO APPROVAL BY THE ENGINEER.
7. STAINLESS STEEL WELDED WIRE FABRIC SHALL HAVE 3x3 MESH WITH 18 GA. WIRES. MESH SHALL BE ATTACHED WITH 1/4"ø S.S. CAP SCREWS AT 12" MAXIMUM SPACING INSTALLED WITH ANTI-SEIZE COMPOUND.

FIELD BOOK:					
SURVEYED:					
SURVEY BASE MAP:					
DESIGN ENTERED:	D. SANTORO	01/2010			
DESIGNED	T. ZONG	01/2010			
CHECKED:	T. MCAULIFFE	01/2010			
SUPERVISOR:	T. ZOLI	01/2010	NUM.	REVISION	BY / DATE

TIE ZONG — STATE OF WASHINGTON — 36071 — STRUCTURAL ENGINEER — PROFESSIONAL SEAL IN LIEU

HNTB

FED. AID No.

PROJECT No. 300197

SURVEY No. 32-24-4-22

MAINTENANCE DIVISION No. 3

KING COUNTY DEPT. OF TRANSPORTATION
HAROLD TANIGUCHI, DIRECTOR

SOUTH PARK BRIDGE #3179 REPLACEMENT

BASCULE SPAN
TRAFFIC BARRIER DETAILS – 2

King County

TR11

SHEET 576 OF 667 SHEETS

316-63 (___)

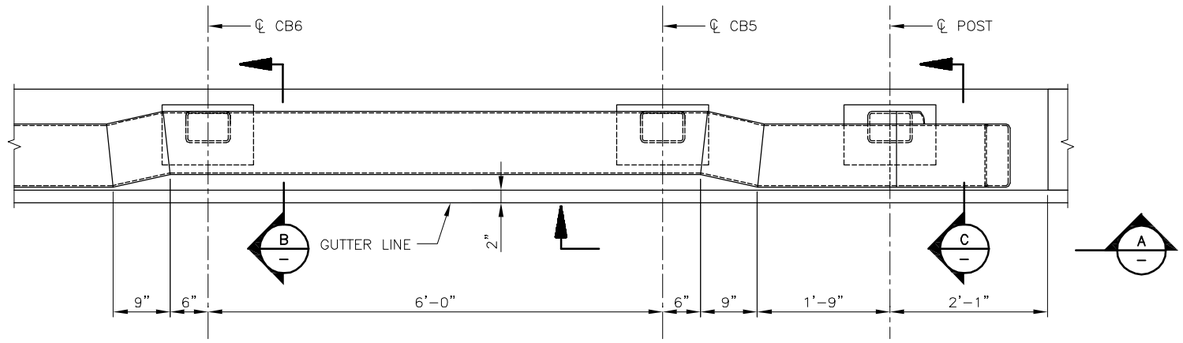

VIEW E / TR10

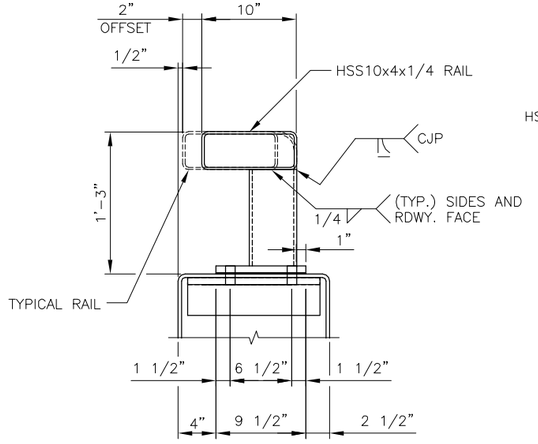

SECTION B / –

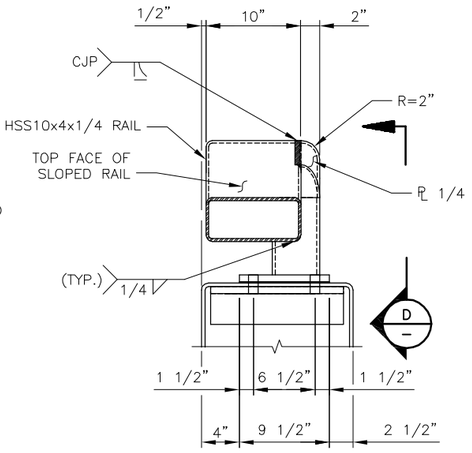

SECTION C / –

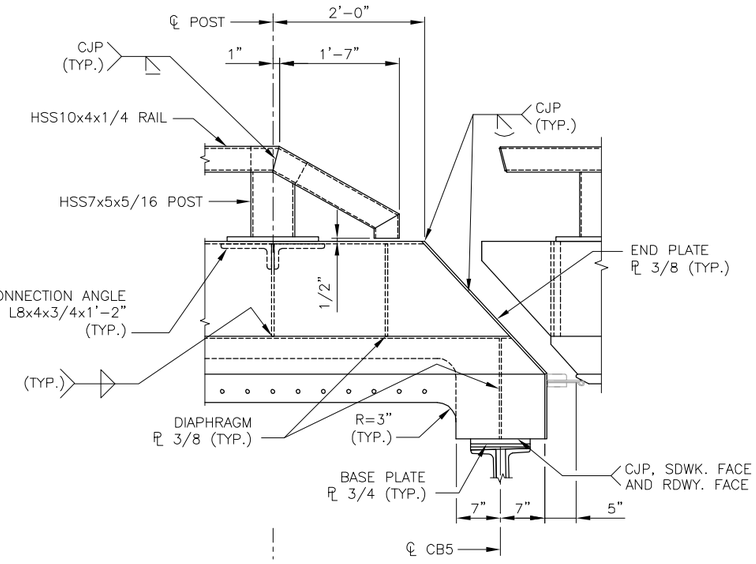

VIEW A / –

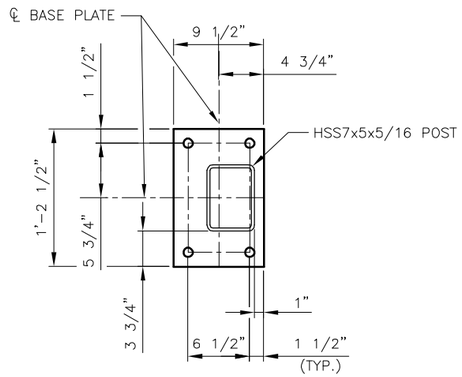

BASE PLATE DETAIL

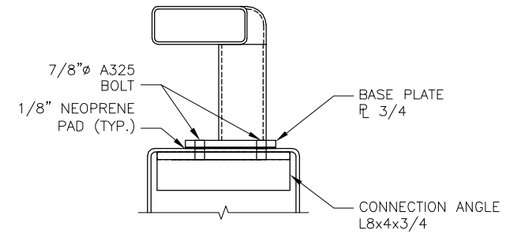

TYPICAL CONNECTION DETAIL

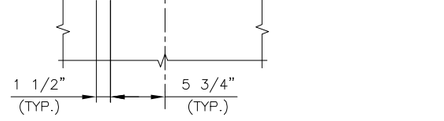

VIEW D / –

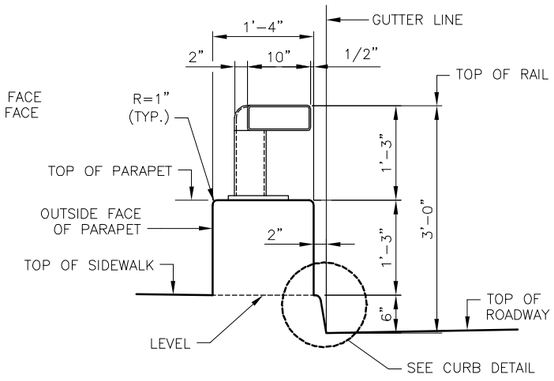

BARRIER GEOMETRY DETAIL

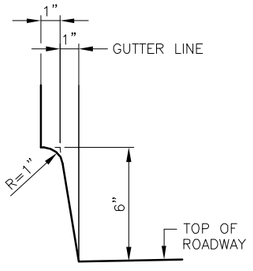

CURB DETAIL

NOTES:

1. FOR ADDITIONAL NOTES, SEE SHEET TR10.
2. FOR GENERAL NOTES, SEE SHEET BG05.
3. FOR TYPICAL RAIL AND POST DETAILS, SEE SHEETS TR07 AND TR08 APPLY.

FIELD BOOK:						FED. AID No.		KING COUNTY DEPT. OF TRANSPORTATION HAROLD TANIGUCHI, DIRECTOR **SOUTH PARK BRIDGE #3179 REPLACEMENT** BASCULE SPAN TRAFFIC BARRIER DETAILS – 3		TR12
SURVEYED:						PROJECT No. 300197			King County	SHEET 577 OF 667 SHEETS
SURVEY BASE MAP:						SURVEY No. 32-24-4-22				
DESIGN ENTERED: D. SANTORO	01/2010					MAINTENANCE DIVISION No. 3				316-63 (___)
DESIGNED T. ZONG	01/2010									
CHECKED: T. MCAULIFFE	01/2010									
SUPERVISOR: T. ZOLI	01/2010	NUM.	REVISION	BY	DATE					

TIE ZONG — STATE OF WASHINGTON — 30371 — STRUCTURAL ENGINEER — PROFESSIONAL ENGINEER

HNTB

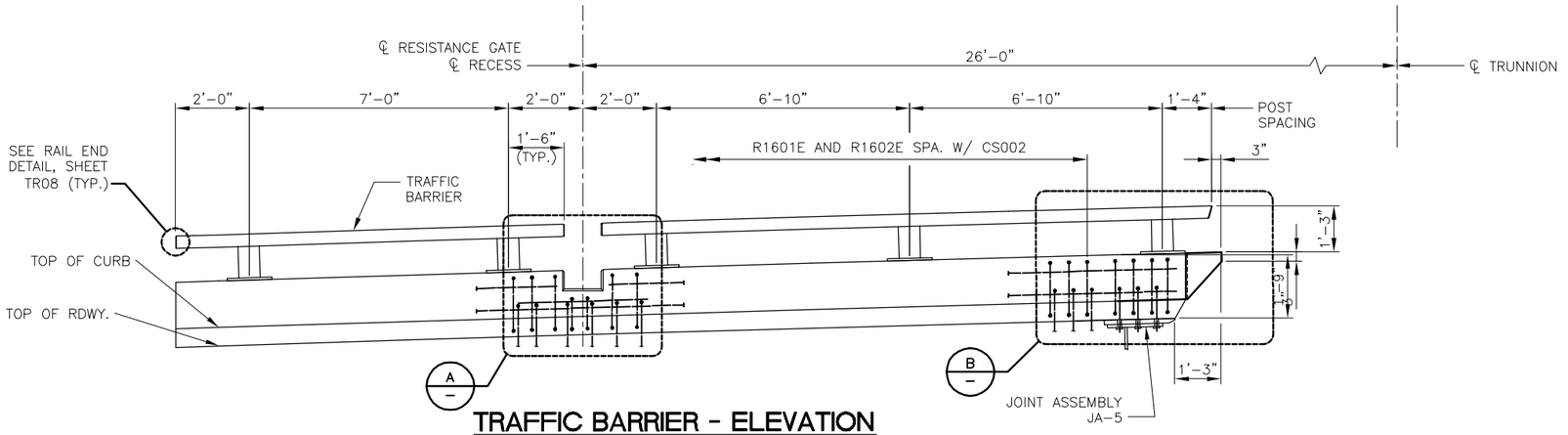

TRAFFIC BARRIER - ELEVATION

(ROADWAY FACE SHOWN)

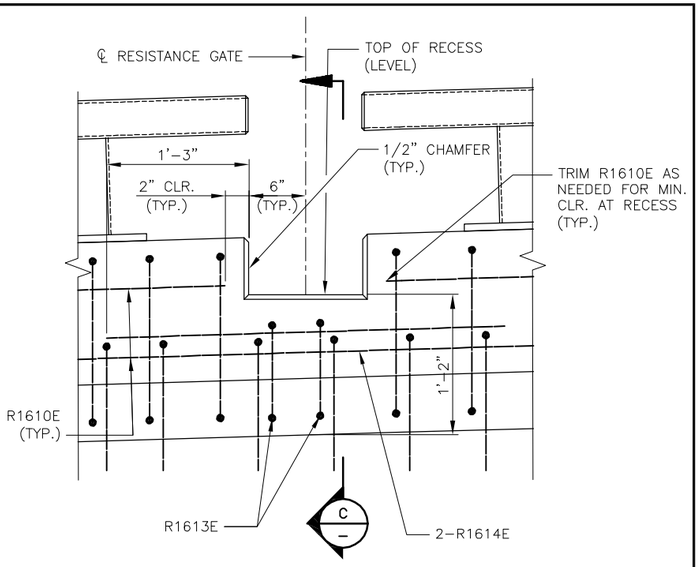

DETAIL A

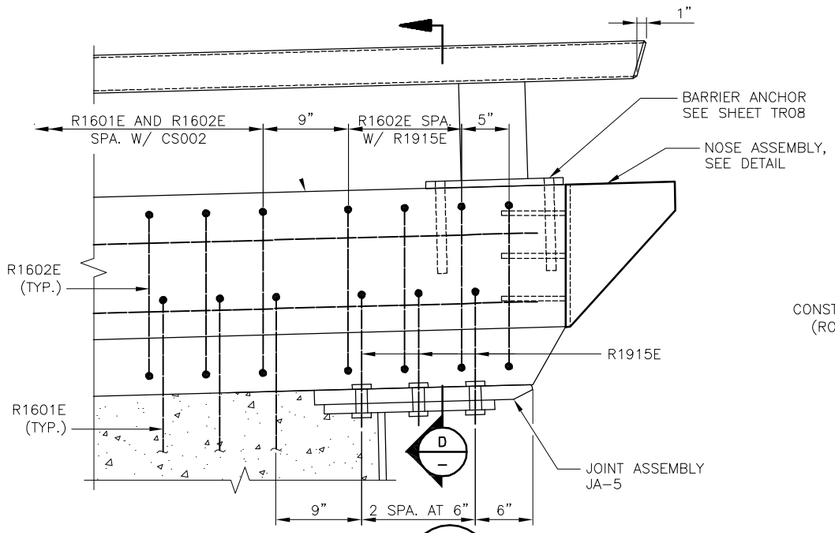

DETAIL B

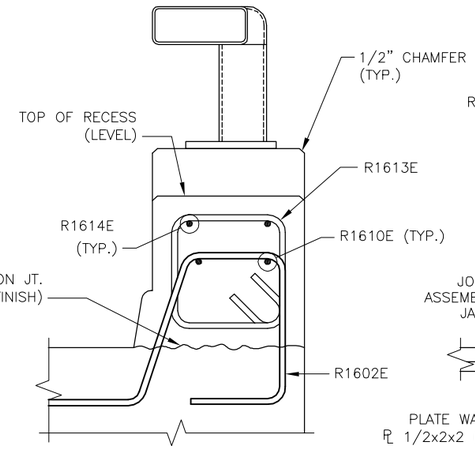

SECTION C

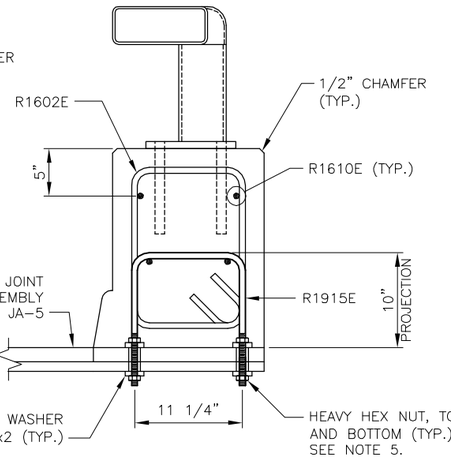

SECTION D

(STUDS NOT SHOWN)

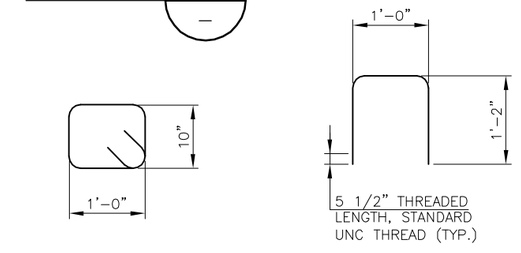

BAR BENDING DETAILS

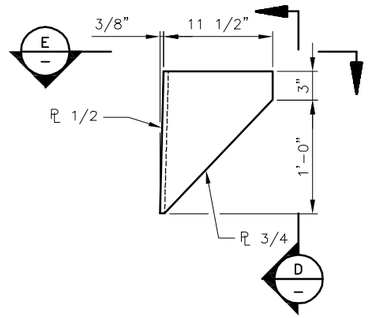

NOSE ASSEMBLY DETAIL

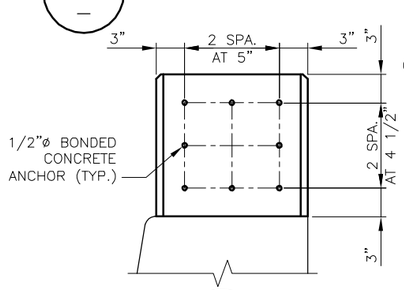

VIEW D

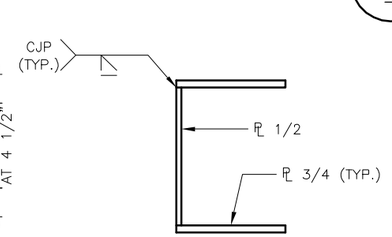

VIEW E

SUPPLEMENTAL BILL OF REINFORCEMENT FOR BARRIER

(PER BARRIER, 4 REQUIRED)

BAR	SIZE	NO.	LENGTH	SHAPE	LOCATION
R1613E	#5	2	4'-7"	BENT	PARAPET VERTICAL AT RECESS
R1614E	#5	2	3'-6"	STRAIGHT	PARAPET LONGITUDINAL AT RECESS
R1915E	#6	3	3'-4"	BENT	PARAPET BASE AT JOINT ASSEMBLY

NOTES:

1. TRAFFIC BARRIER ON THE COUNTERWEIGHT SPAN SHALL BE INCLUDED IN THE PAY ITEM FOR "TRAFFIC BARRIER – APPROACH". LENGTH OF BARRIER FOR PAYMENT SHALL BE MEASURED BETWEEN THE END FACES OF THE BARRIER AT TOP OF ROADWAY.
2. FOR TYPICAL TRAFFIC BARRIER DETAILS AND NOTES, SEE SHEETS TR07 AND TR08.
3. FOR COUNTERWEIGHT SPAN DECK DETAILS, SEE SHEETS BL70 AND BL71.
4. BARS R1613E THROUGH R1915E ARE IN ADDITION TO THE TYPICAL BARRIER REINFORCEMENT DETAILED ON SHEET TR07. THE BILL OF REINFORCEMENT ON THIS SHEET SUPPLEMENTS THE REINFORCEMENT TABULATED ON SHEET TR07.
5. FOR DETAILS OF JOINT ASSEMBLY JA-5, SEE SHEETS BL49 AND BL68.
6. USE TOP NUT TO ACHIEVE PROJECTION SHOWN, FULLY TIGHTEN BOTTOM NUT TO SECURE REINFORCING BAR. AFTER THE BOTTOM NUTS ARE FULLY TIGHTENED, MAR THE THREADS PROTRUDING THROUGH THE NUT SUCH THAT THE NUT IS UNABLE TO TURN. AFTER BARS ARE FULLY INSTALLED, PRIOR TO POURING SLAB CONCRETE, APPLY AN INORGANIC ZICH-RICH COATING TO NUTS, WASHERS, AND EXPOSED THREADS.

FIELD BOOK:				
SURVEYED:				
SURVEY BASE MAP:				
DESIGN ENTERED:	P. ELLA	01/2010		
DESIGNED	T. ZONG	01/2010		
CHECKED:	T. MCAULIFFE	01/2010		
SUPERVISOR:	T. ZOLI	01/2010		
		NUM.	REVISION	BY / DATE

TIE ZONG — STATE OF WASHINGTON — STRUCTURAL ENGINEER — PROFESSIONAL ENGINEER

HNTB

FED. AID No.

PROJECT No. 300197

SURVEY No. 32-24-4-22

MAINTENANCE DIVISION No. 3

ALL SHEETS OF THESE PLANS SHALL BE DEEMED APPROVED BY THE SIGNATURE AND STAMP ON COVER SHEET.

KING COUNTY DEPT. OF TRANSPORTATION

HAROLD TANIGUCHI, DIRECTOR

SOUTH PARK BRIDGE #3179 REPLACEMENT

COUNTERWEIGHT SPAN

TRAFFIC BARRIER DETAILS

King County

TR13

SHEET 578 OF 667 SHEETS

316-63 (___)

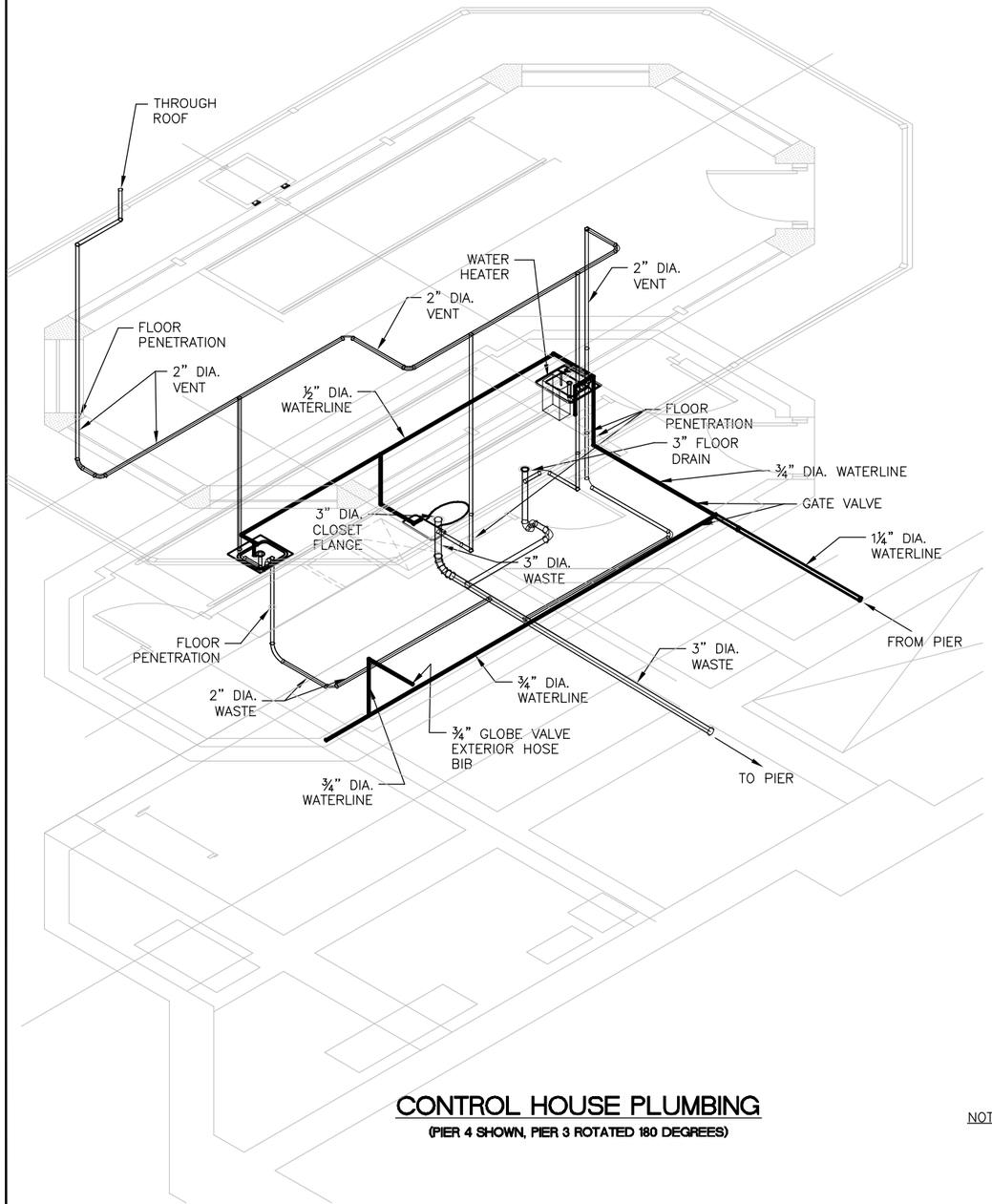

CONTROL HOUSE PLUMBING

(PIER 4 SHOWN, PIER 3 ROTATED 180 DEGREES)

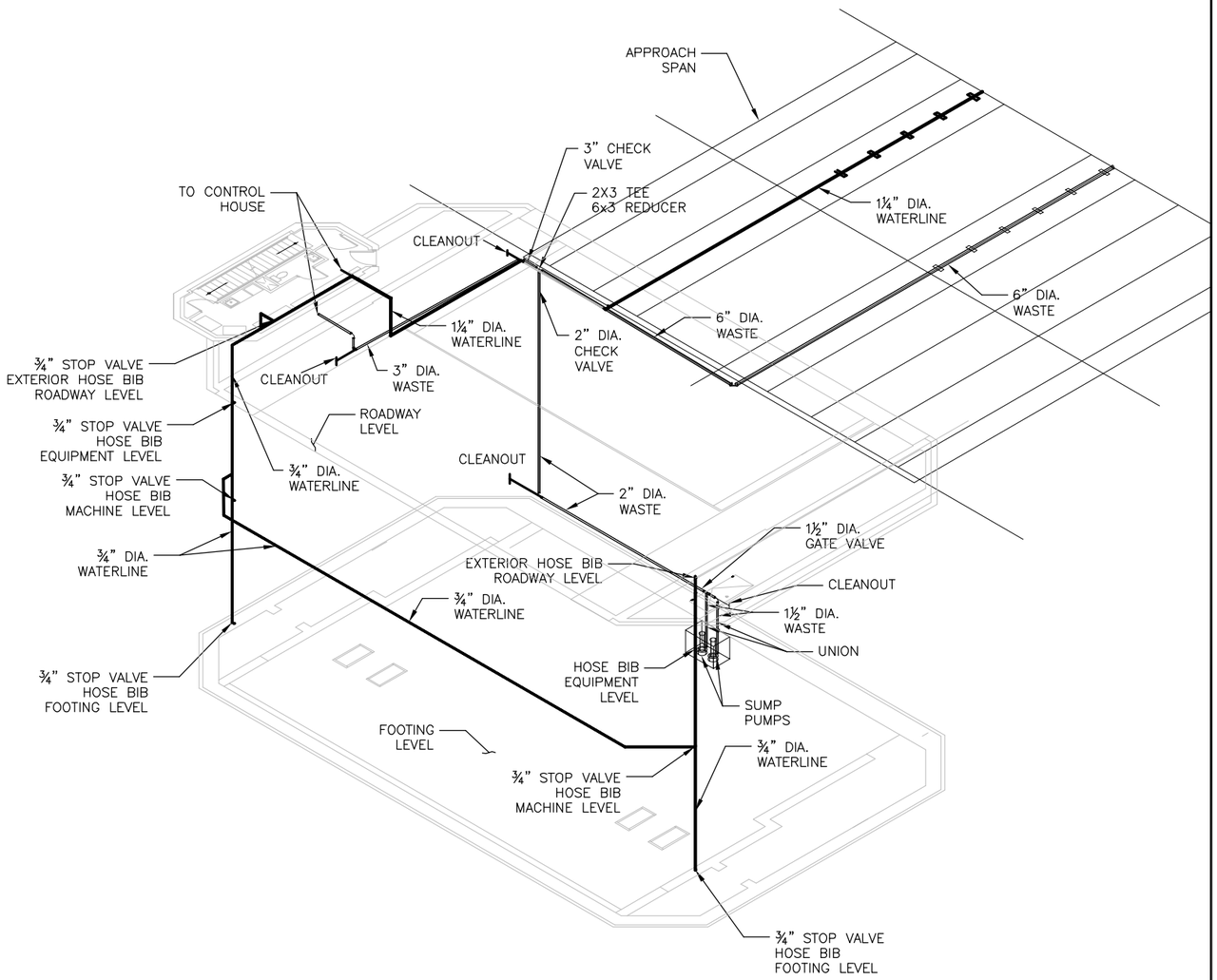

PIER PLUMBING

(PIER 4 SHOWN, PIER 3 ROTATED 180 DEGREES)

NOTES:
SEE SPECIAL PROVISIONS DIVISION
SLOPE ALL DRAINS AND VENTS ¼" PER FOOT.

FIELD BOOK:		
SURVEYED:		
SURVEY BASE MAP:		
DESIGN ENTERED:	D. RINEHART	11/2009
DESIGNED	M. GREEN	11/2009
CHECKED:	D. APPELBAUM	12/2009
SUPERVISOR:	M. GREEN	01/2010

NUM.	REVISION	BY	DATE

MARK WILLIAM GREEN, STATE OF WASHINGTON, 46664, REGISTERED PROFESSIONAL ENGINEER

HNTB

FED. AID No.

PROJECT No. 300197
SURVEY No. 32-24-4-22

MAINTENANCE DIVISION No. 3

KING COUNTY DEPT. OF TRANSPORTATION
HAROLD TANIGUCHI, DIRECTOR
SOUTH PARK BRIDGE #3179 REPLACEMENT
PIERS 3 & 4 PLUMBING LAYOUT

King County

PM01

SHEET 579 OF 667 SHEETS

316-63 (____)

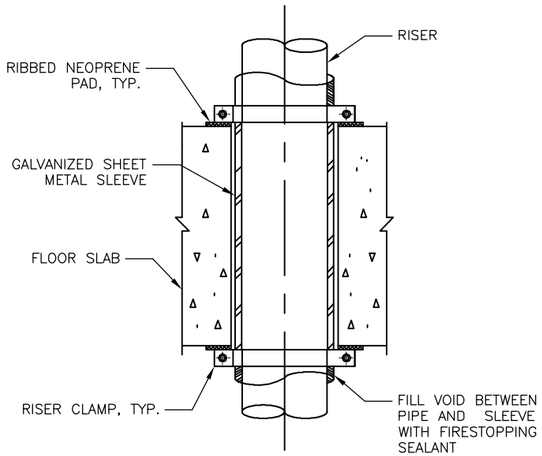

TYPICAL RISER ANCHOR DETAIL

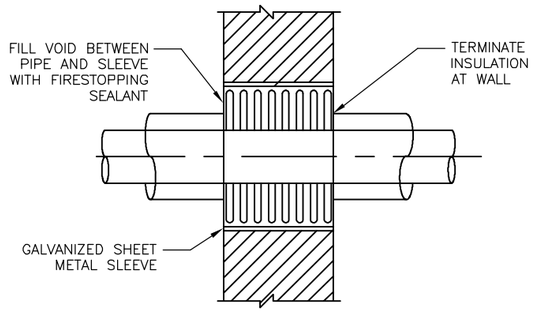

PIPE SLEEVE THRU WALLS

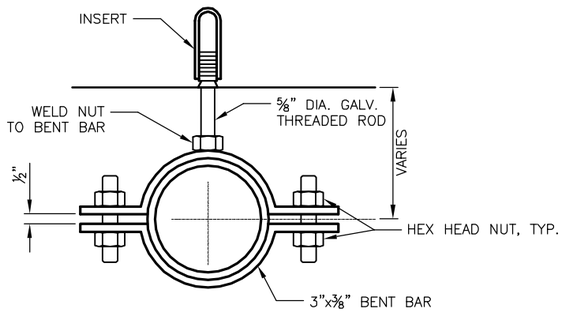

HANGER BRACKET DETAIL

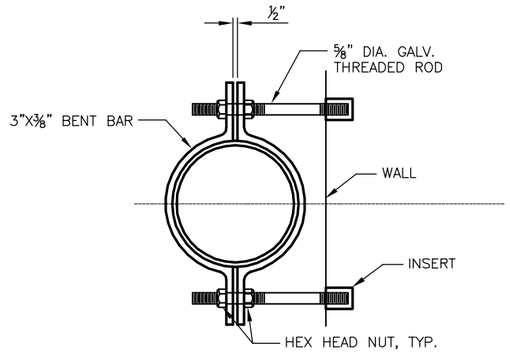

WALL BRACKET DETAIL

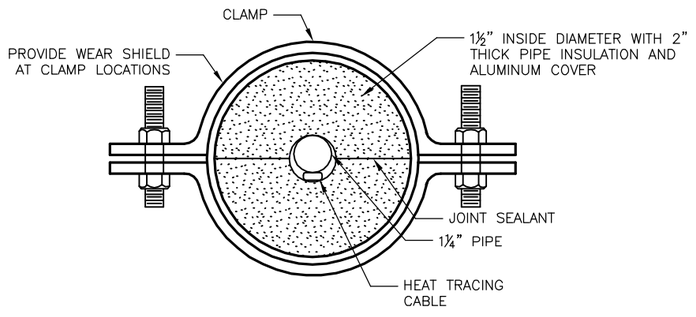

1¼" INSULATED WATER LINE WITH HEAT TRACE DETAIL

FIELD BOOK:					
SURVEYED:					
SURVEY BASE MAP:					
DESIGN ENTERED:	D. RINEHART	11/2009			
DESIGNED	M. GREEN	11/2009			
CHECKED:	D. APPELBAUM	12/2009			
SUPERVISOR:	M. GREEN	01/2010	NUM.	REVISION	BY / DATE

MARK WILLIAM GREEN — STATE OF WASHINGTON — 25664 — REGISTERED PROFESSIONAL ENGINEER

HNTB

FED. AID No.

PROJECT No. 300197

SURVEY No. 32-24-4-22

MAINTENANCE DIVISION No. 3

KING COUNTY DEPT. OF TRANSPORTATION
HAROLD TANIGUCHI, DIRECTOR

SOUTH PARK BRIDGE #3179 REPLACEMENT

PIERS 3 & 4 PLUMBING DETAILS

King County

PM02

SHEET 580 OF 667 SHEETS

316-63 (___)

VENTILATION FAN SCHEDULE								
ITEM	MANUF AND MODEL	QTY	CFM	SP IN.	RPM	ELECTRICAL VOLTS/HZ/PH	SONES	CONTROL
BATH EXHAUST	BROAN L100MG	2	115	0.125	630	120/60/1	0.9	MANUAL

HEATING AND COOLING EQUIPMENT							
ITEM	MANUF AND MODEL	QTY	SUPPLY/OUTSIDE CFM	COOLING	HEATING	ELETRICAL VOLTS/HZ/PH	CONTROL
AIR HANDLER	TRANE 4TEH3F36B	2	1400/175	–	–	240/60/1	THERMOSTAT
AUX HEAT	TRANE BAYHTR1305	2	–	–	4.8 KW	240/60/1	THERMOSTAT
HEAT PUMP	TRANE 4TWA3036A4	2	—	36,000	36,000	480/60/3	THERMOSTAT

HEATING AND COOLING LOUVER AND DAMPER SCHEDULE				
ITEM	MANUF AND MODEL	QTY	SIZE IN.	REMARKS
BATH EXHAUST	BROAN	2	PER MANUF	
SUPPLY GRILL	TITUS 300R–HD	2	18x12	WITH MANUAL DAMPER
SUPPLY GRILL	TITUS 300R–HD	2	14x14	WITH MANUAL DAMPER
RETURN GRILL	TITUS 350ZRS	2	14x14	
RETURN GRILL	TITUS 350ZRS	2	12x12	
FRESH AIR INTAKE	RUSKIN	2	6x6	WITH MANUAL DAMPER

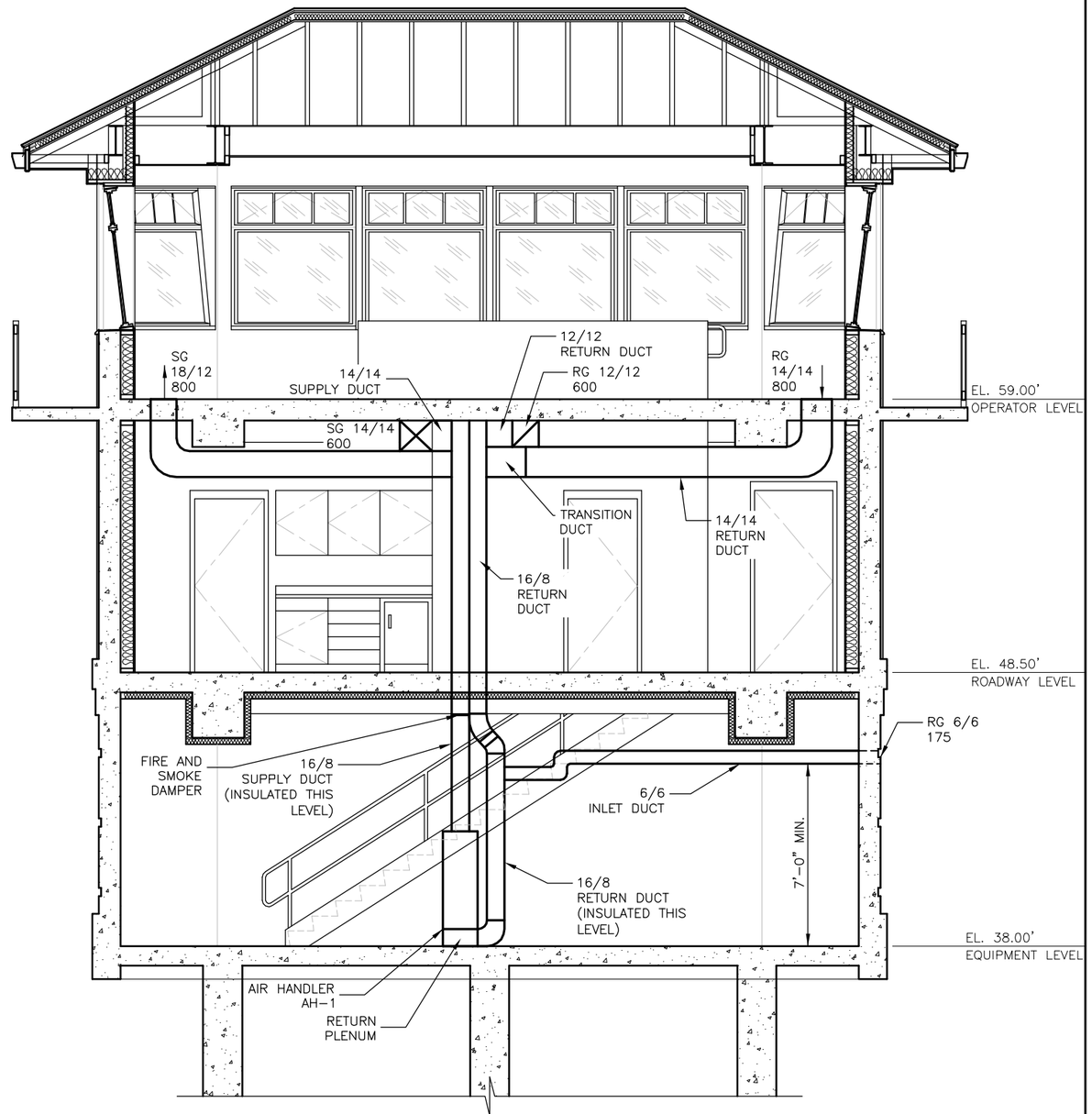

LEGEND

SG 13/12 900
- SUPPLY GRILL OR RETURN GRILL
- SIZE INCHES
- CFM

HVAC ELEVATION
LONGITUDINAL SECTION

NOTES: ROUTE DUCTWORK TO AVOID HOUSE LIGHTING.

FIELD BOOK:								
SURVEYED:								
SURVEY BASE MAP:								
DESIGN ENTERED:	K. HATTON	11/2009						
DESIGNED	M. GREEN	11/2009						
CHECKED:	D. APPELBAUM	12/2009						
SUPERVISOR:	M. GREEN	01/2010	NUM.	REVISION	BY	DATE		

MARK WILLIAM GREEN — STATE OF WASHINGTON — 35654 — REGISTERED PROFESSIONAL ENGINEER

HNTB

FED. AID No.

PROJECT No. 300197

SURVEY No. 32-24-4-22

MAINTENANCE DIVISION No. 3

KING COUNTY DEPT. OF TRANSPORTATION
HAROLD TANIGUCHI, DIRECTOR

SOUTH PARK BRIDGE #3179 REPLACEMENT

PIERS 3 & 4 HVAC SCHEDULE

King County

PM03

SHEET 581 OF 667 SHEETS

316-63 (____)

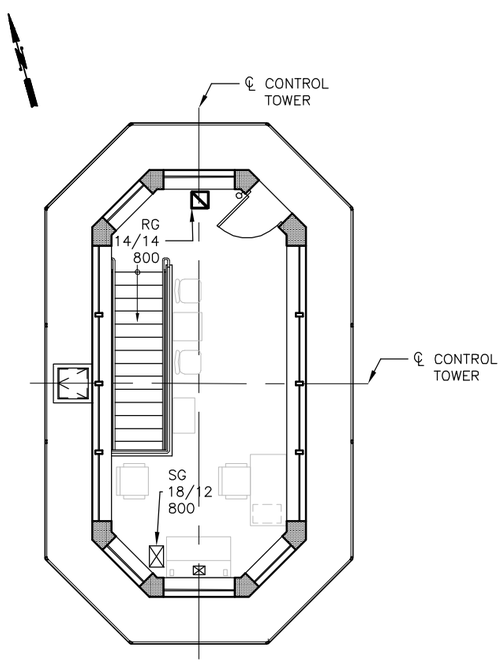

HVAC OPERATOR LEVEL

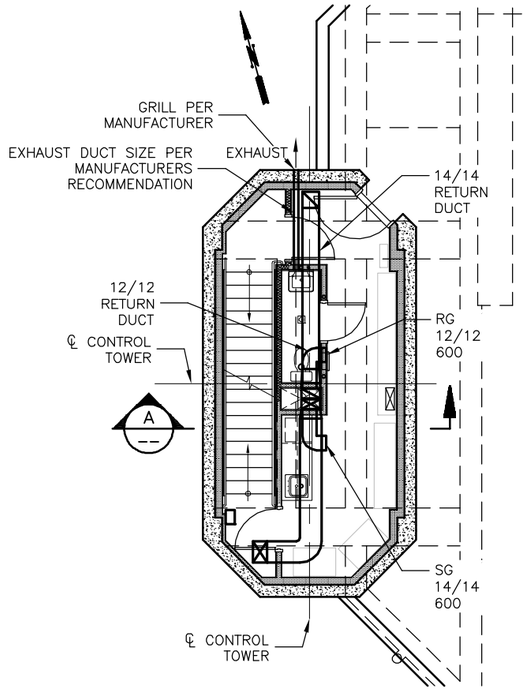

HVAC ROADWAY LEVEL

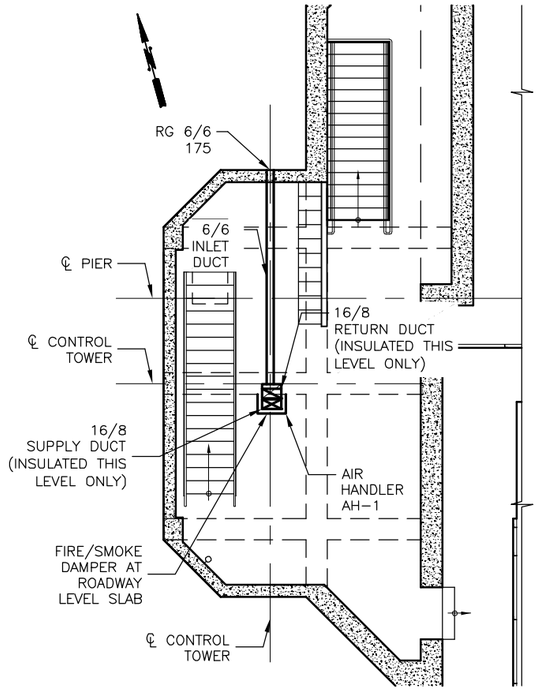

HVAC EQUIPMENT LEVEL

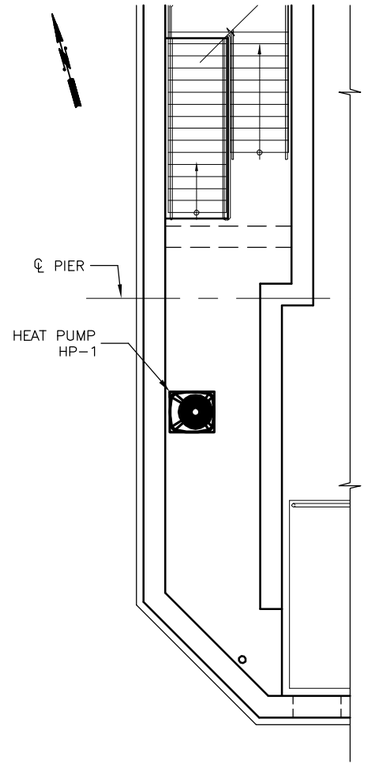

HVAC MACHINE LEVEL

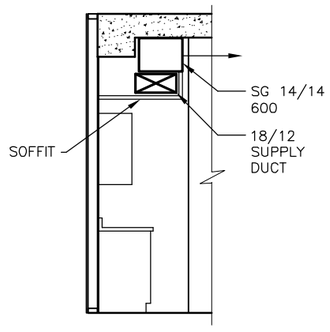

SECTION A —

FIELD BOOK:						FED. AID No.		KING COUNTY DEPT. OF TRANSPORTATION HAROLD TANIGUCHI, DIRECTOR **SOUTH PARK BRIDGE #3179 REPLACEMENT** PIERS 3 & 4 HVAC LAYOUT	King County	PM04
SURVEYED:						PROJECT No. 300197				SHEET 582 OF 667 SHEETS
SURVEY BASE MAP:						SURVEY No. 32-24-4-22				
DESIGN ENTERED:	F. HATTON	11/2009				MAINTENANCE DIVISION No. 3				316-63 (___)
DESIGNED	M. GREEN	11/2009								
CHECKED:	D. APPELBAUM	12/2009								
SUPERVISOR:	M. GREEN	01/2010	NUM.	REVISION	BY	DATE				

SEC. 32, T.24 N, R.4 E, W.M.

NOTES:

1. ALL BURIED DI PIPE JOINTS SHALL BE RESTRAINED TYP.
2. SEE FP09 FOR DETECTOR CHECK AND BACKFLOW PREVENTER INSTALLATION DETAILS.

LEGEND:

- THRUST BLOCK
- GATE VALVE
- FIRE HYDRANT

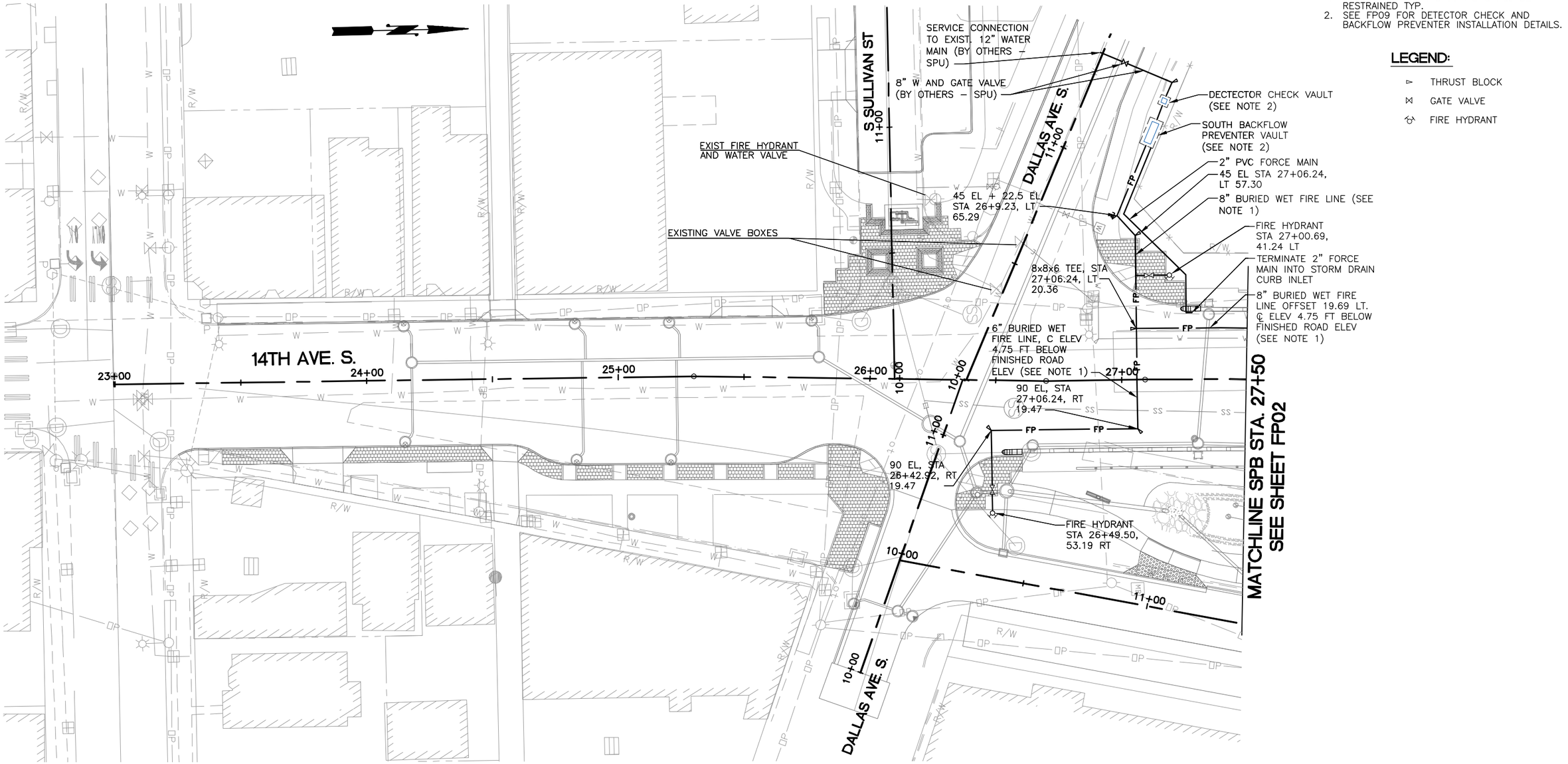

20 10 0 20 40
SCALE IN FEET

CALL 2 WORKING DAYS BEFORE YOU DIG
1-800-424-5555
(UNDERGROUND UTILITY LOCATIONS ARE APPROX.)

FIELD BOOK:					
SURVEYED:					
SURVEY BASE MAP:					
DESIGN ENTERED:	A. NAPIER	06/2009			
DESIGNED	D. PARKER	06/2009			
CHECKED:	J. CASEY	10/2009			
SUPERVISOR:	J. CASEY	01/2010	NUM.	REVISION	BY / DATE

DAVID B. PARKER — STATE OF WASHINGTON — 36243 — REGISTERED PROFESSIONAL ENGINEER

HNTB

FED. AID No.

PROJECT No. 300197

SURVEY No. 32-24-4-22

MAINTENANCE DIVISION No. 3

KING COUNTY DEPT. OF TRANSPORTATION
HAROLD TANIGUCHI, DIRECTOR

SOUTH PARK BRIDGE #3179 REPLACEMENT

FIRE PROTECTION PLANS – 1

King County

FP01

SHEET 583 OF 667 SHEETS

316-63 (___)

SEC. 32, T.24 N, R.4 E, W.M.

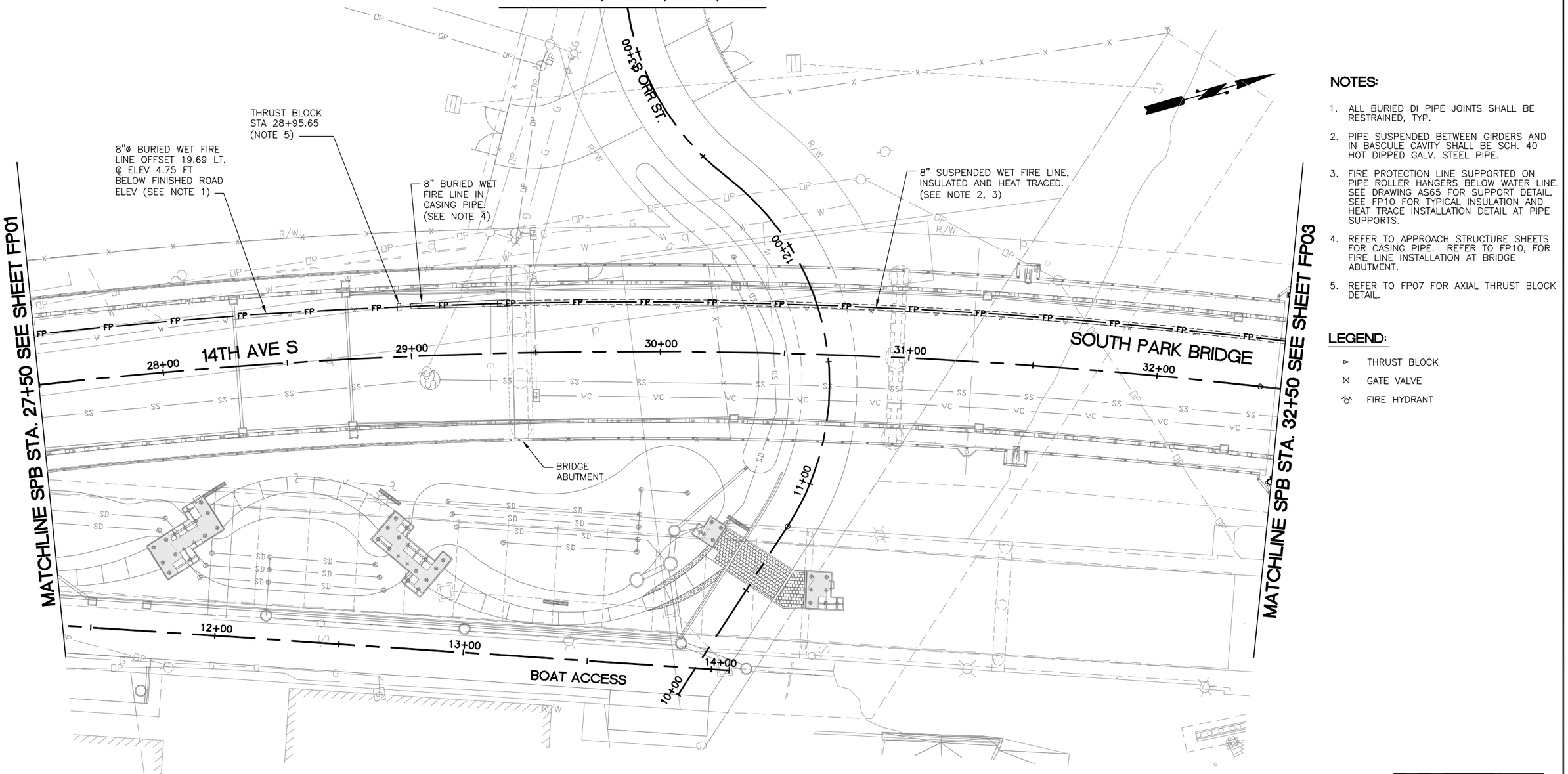

NOTES:

1. ALL BURIED DI PIPE JOINTS SHALL BE RESTRAINED, TYP.
2. PIPE SUSPENDED BETWEEN GIRDERS AND IN BASCULE CAVITY SHALL BE SCH. 40 HOT DIPPED GALV. STEEL PIPE.
3. FIRE PROTECTION LINE SUPPORTED ON PIPE ROLLER HANGERS BELOW WATER LINE. SEE DRAWING AS65 FOR SUPPORT DETAIL. SEE FP10 FOR TYPICAL INSULATION AND HEAT TRACE INSTALLATION DETAIL AT PIPE SUPPORTS.
4. REFER TO APPROACH STRUCTURE SHEETS FOR CASING PIPE. REFER TO FP10, FOR FIRE LINE INSTALLATION AT BRIDGE ABUTMENT.
5. REFER TO FP07 FOR AXIAL THRUST BLOCK DETAIL.

LEGEND:

- THRUST BLOCK
- GATE VALVE
- FIRE HYDRANT

20 10 0 20 40
SCALE IN FEET

CALL 2 WORKING DAYS BEFORE YOU DIG
1-800-424-5555
(UNDERGROUND UTILITY LOCATIONS ARE APPROX.)

FIELD BOOK:					
SURVEYED:					
SURVEY BASE MAP:					
DESIGN ENTERED:	A. NAPIER	06/2009			
DESIGNED	D. PARKER	06/2009			
CHECKED:	J. CASEY	10/2009			
SUPERVISOR:	J. CASEY	01/2010	NUM.	REVISION	BY / DATE

DAVID B. PARKER — STATE OF WASHINGTON — 18243 — REGISTERED PROFESSIONAL ENGINEER

HNTB

FED. AID No.

PROJECT No. 300197

SURVEY No. 32-24-4-22

MAINTENANCE DIVISION No. 3

KING COUNTY DEPT. OF TRANSPORTATION
HAROLD TANIGUCHI, DIRECTOR

SOUTH PARK BRIDGE #3179 REPLACEMENT

FIRE PROTECTION PLANS – 2

King County

FP02

SHEET 584 OF 667 SHEETS

316-63 (____)

SEC. 32, T.24 N, R.4 E, W.M.

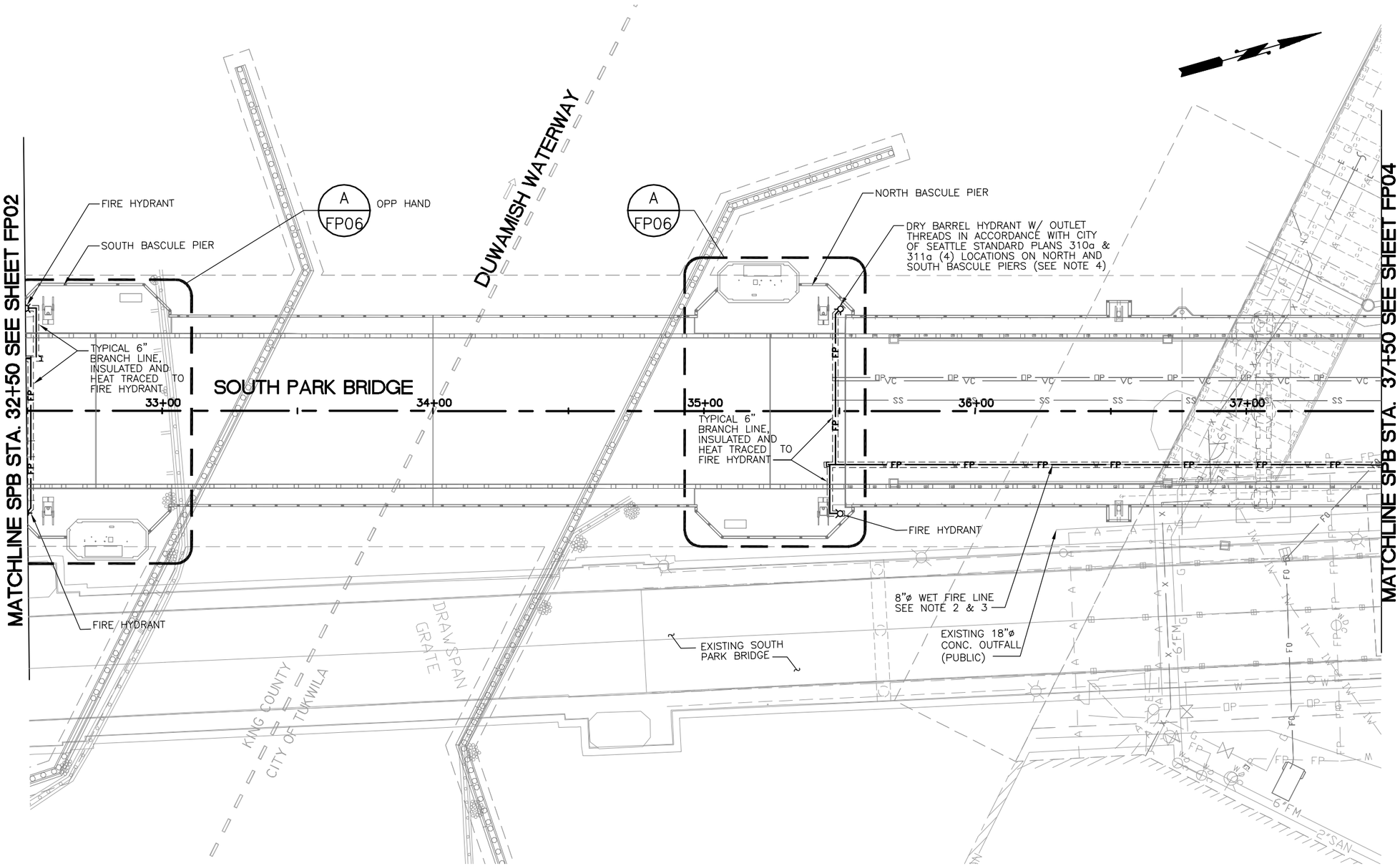

NOTES:

1. ALL BURIED DI PIPE JOINTS SHALL BE RESTRAINED TYP.
2. PIPE SUSPENDED BETWEEN GIRDERS AND IN BASCULE CAVITY SHALL BE SCH. 40 HOT DIP GALV. STEEL PIPE.
3. FIRE PROTECTION LINE SUPPORTED ON PIPE ROLLER HANGERS BELOW WATER LINE. SEE DRAWING AS65 FOR SUPPORT DETAIL. SEE DRAWING FP10 FOR TYPICAL INSULATION AND HEAT TRACE INSTALLATION DETAIL AT PIPE SUPPORTS.
4. SEE FP06 AND FP07 FOR TYP FIRE LINE AND HYDRANT INSTALLATION AT BASCULE PIER.

LEGEND:

- THRUST BLOCK
- GATE VALVE
- FIRE HYDRANT

20 10 0 20 40
SCALE IN FEET

CALL 2 WORKING DAYS BEFORE YOU DIG
1-800-424-5555
(UNDERGROUND UTILITY LOCATIONS ARE APPROX.)

FIELD BOOK:		
SURVEYED:		
SURVEY BASE MAP:		
DESIGN ENTERED:	A. NAPIER	06/2006
DESIGNED	D. PARKER	06/2009
CHECKED:	J. CASEY	10/2009
SUPERVISOR:	J. CASEY	01/2010

NUM.	REVISION	BY	DATE

DAVID B. PARKER, STATE OF WASHINGTON, 36243, REGISTERED PROFESSIONAL ENGINEER

HNTB

FED. AID No.

PROJECT No. 300197
SURVEY No. 32-24-4-22

MAINTENANCE DIVISION No. 3

KING COUNTY DEPT. OF TRANSPORTATION
HAROLD TANIGUCHI, DIRECTOR

SOUTH PARK BRIDGE #3179 REPLACEMENT

FIRE PROTECTION PLANS – 3

King County

FP03

SHEET 585 OF 667 SHEETS

316-63 (____)

SEC. 32, T.24 N, R.4 E, W.M.

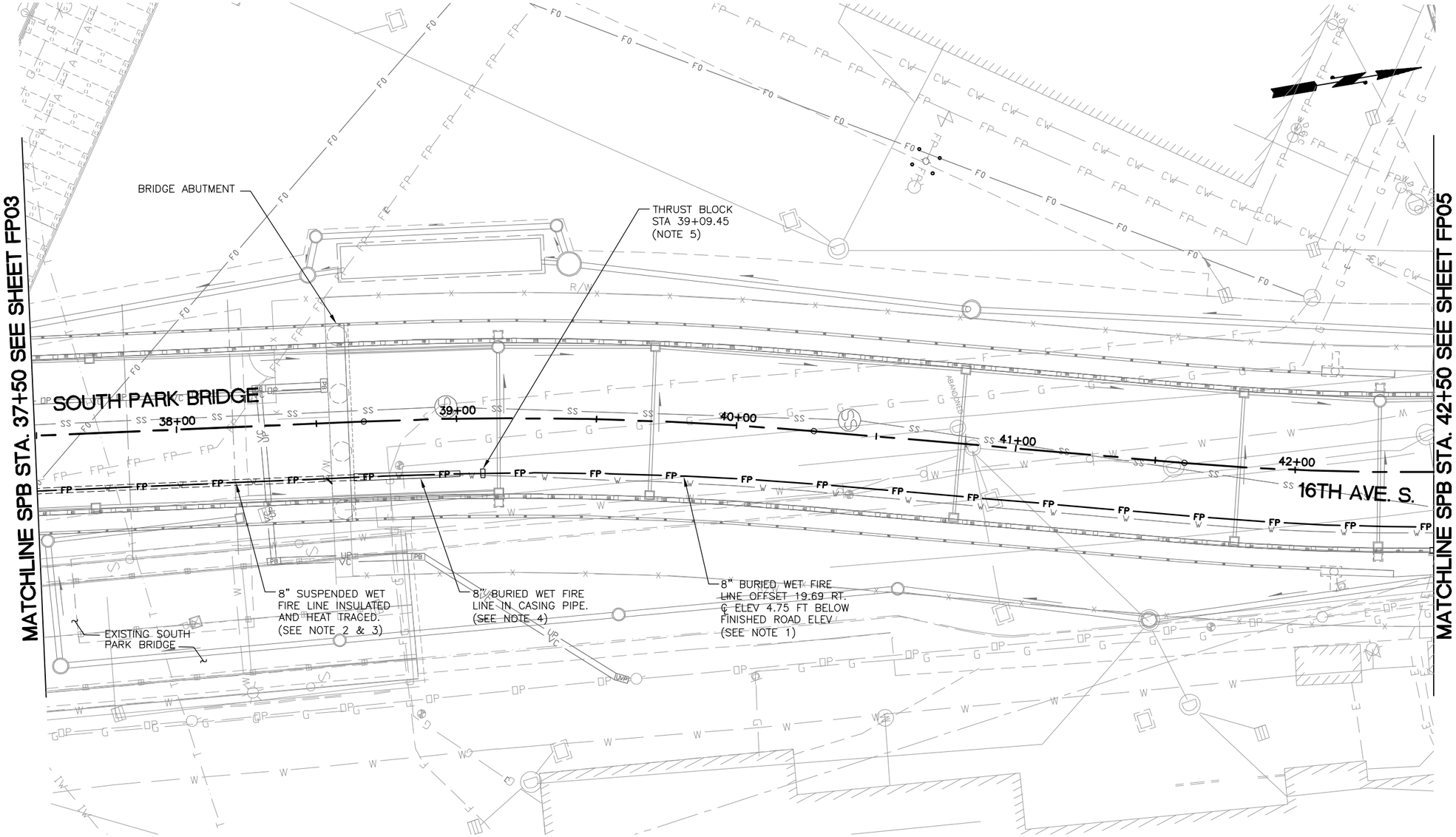

NOTES:

1. ALL BURIED DI PIPE JOINTS SHALL BE RESTRAINED, TYP.
2. PIPE SUSPENDED BETWEEN GIRDERS AND IN BASCULE CAVITY SHALL BE SCH. 40 HOT DIPPED GALV. STEEL PIPE.
3. FIRE PROTECTION LINE SUPPORTED ON PIPE ROLLER HANGERS BELOW WATER LINE. SEE DRAWING AS65 FOR SUPPORT DETAIL. SEE FP10 FOR TYPICAL INSULATION AND HEAT TRACE INSTALLATION DETAIL AT PIPE SUPPORTS.
4. REFER TO APPROACH STRUCTURE SHEETS FOR CASING PIPE. REFER TO FP10, DETAIL A, FOR FIRE LINE INSTALLATION AT BRIDGE ABUTMENT.
5. REFER TO FP07 FOR AXIAL THRUST BLOCK DETAIL.

LEGEND:

- ▻ THRUST BLOCK
- ⋈ GATE VALVE
- FIRE HYDRANT

20 10 0 20 40
SCALE IN FEET

CALL 2 WORKING DAYS BEFORE YOU DIG 1-800-424-5555
(UNDERGROUND UTILITY LOCATIONS ARE APPROX.)

FIELD BOOK:			
SURVEYED:			
SURVEY BASE MAP:			
DESIGN ENTERED:	A. NAPIER	06/2009	
DESIGNED	D. PARKER	06/2009	
CHECKED:	J. CASEY	10/2009	
SUPERVISOR:	J. CASEY	01/2010	

NUM.	REVISION	BY	DATE

DAVID B. PARKER — STATE OF WASHINGTON — 36243 — REGISTERED PROFESSIONAL ENGINEER

HNTB

FED. AID No.

PROJECT No. 300197
SURVEY No. 32-24-4-22

MAINTENANCE DIVISION No. 3

KING COUNTY DEPT. OF TRANSPORTATION
HAROLD TANIGUCHI, DIRECTOR

SOUTH PARK BRIDGE #3179 REPLACEMENT

FIRE PROTECTION PLANS – 4

King County

FP04

SHEET 586 OF 667 SHEETS

316-63 (____)

SEC. 28,29,32,33 T.24 N, R.4 E, W.M.

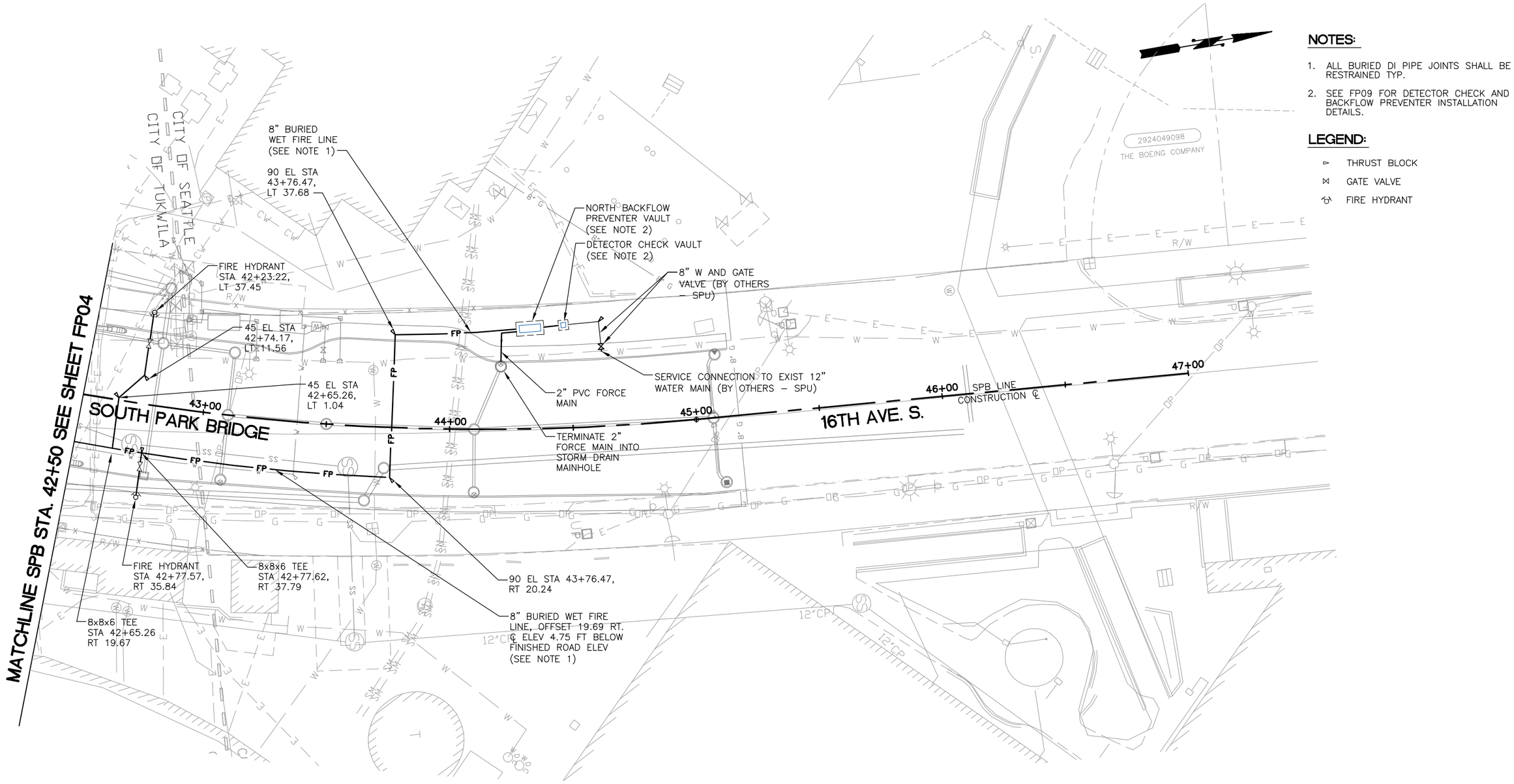

NOTES:

1. ALL BURIED DI PIPE JOINTS SHALL BE RESTRAINED TYP.
2. SEE FP09 FOR DETECTOR CHECK AND BACKFLOW PREVENTER INSTALLATION DETAILS.

LEGEND:

- ▻ THRUST BLOCK
- ⋈ GATE VALVE
- FIRE HYDRANT

20 10 0 20 40
SCALE IN FEET

CALL 2 WORKING DAYS BEFORE YOU DIG
1–800–424–5555
(UNDERGROUND UTILITY LOCATIONS ARE APPROX.)

FIELD BOOK:						FED. AID No.		KING COUNTY DEPT. OF TRANSPORTATION HAROLD TANIGUCHI, DIRECTOR **SOUTH PARK BRIDGE #3179 REPLACEMENT** FIRE PROTECTION PLANS – 5	FP05
SURVEYED:						PROJECT No. 300197			SHEET . 587 OF 667 SHEETS
SURVEY BASE MAP:						SURVEY No. 32–24–4–22			King County
DESIGN ENTERED:	A. NAPIER	06/2009				MAINTENANCE DIVISION No. 3			316-63 (___)
DESIGNED	D. PARKER	06/2009							
CHECKED:	J. CASEY	10/2009							
SUPERVISOR:	J. CASEU	01/2010	NUM.	REVISION	BY	DATE			

DAVID B. PARKER — STATE OF WASHINGTON — 18243 — REGISTERED PROFESSIONAL ENGINEER

HNTB

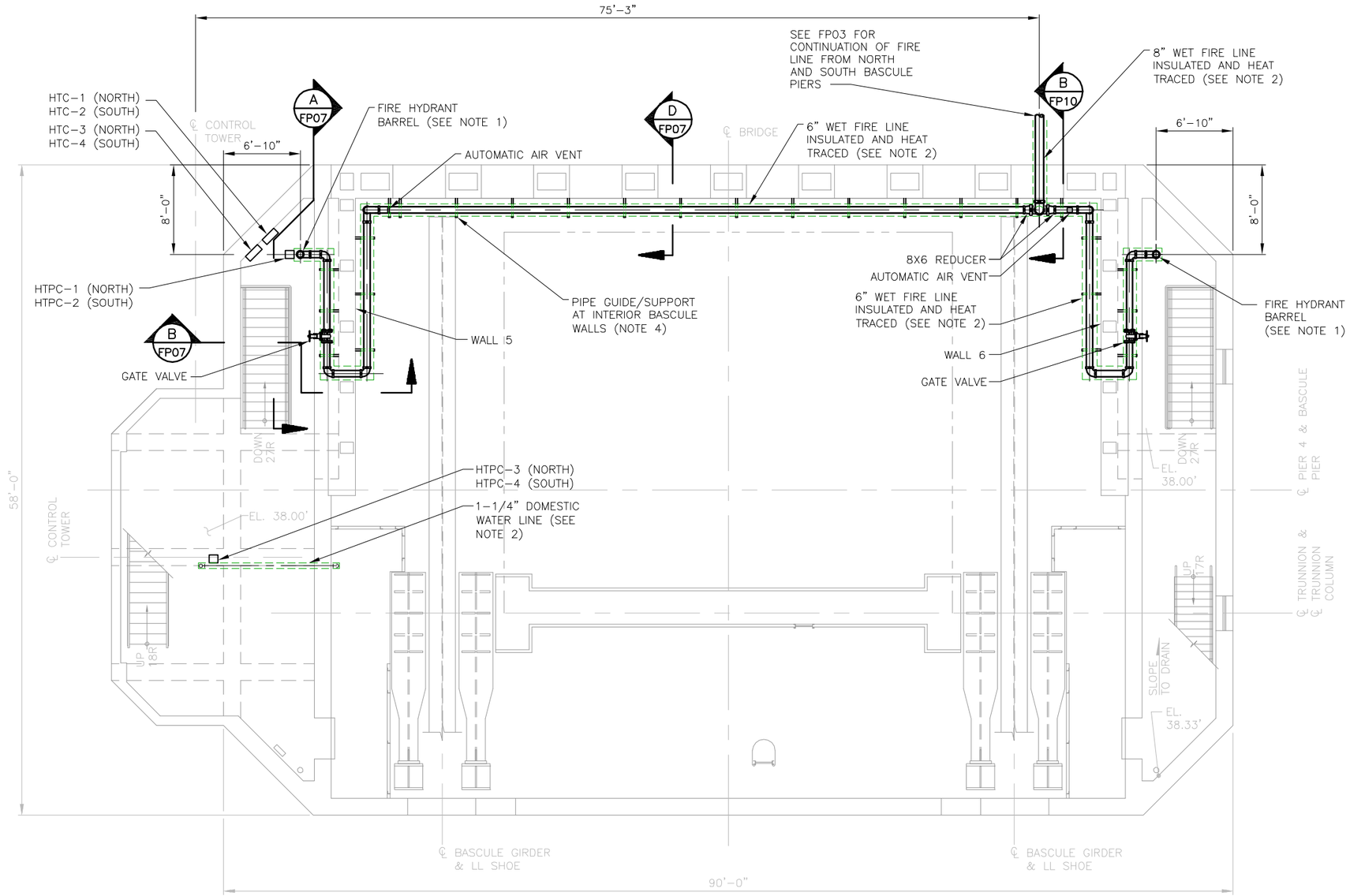

NOTES:

1. SEE BP12 FOR FIRE HYDRANT AT ROAD LEVEL.
2. HEAT TRACE FIRE LINES AND DOMESTIC WATER LINES BELOW THE ROAD LEVEL AND BENEATH THE BRIDGE WITHIN THE BASCULE PIERS. SEE FP08 FOR SCHEMATIC OF HEAT TRACE SYSTEMS.
3. SEE PM01 FOR LAYOUT OF PLUMBING PIPING AT BASCULE PIER.
4. LOCATED SUPPORTS AT MAXIMUM 5'-0" SPACING AND WITHIN 24" OF CHANGES IN PIPE DIRECTION.

DETAIL A / FP03

(EQUIPMENT LEVEL PLAN – BASCULE PIER)
(PIER 4 SHOWN, PIER 3 ROTATED 180°)

5 0 2 4 6 11
SCALE IN FEET

FIELD BOOK:							
SURVEYED:							
SURVEY BASE MAP:							
DESIGN ENTERED:	A. NAPIER	06/2009					
DESIGNED	D. PARKER	06/2009					
CHECKED:	J. CASEY	10/2009					
SUPERVISOR:	J. CASEY	01/2010	NUM.	REVISION	BY	DATE	

DAVID B. PARKER — STATE OF WASHINGTON — 36243 — REGISTERED PROFESSIONAL ENGINEER

HNTB

FED. AID No.
PROJECT No. 300197
SURVEY No. 32-24-4-22
MAINTENANCE DIVISION No. 3

KING COUNTY DEPT. OF TRANSPORTATION
HAROLD TANIGUCHI, DIRECTOR
SOUTH PARK BRIDGE #3179 REPLACEMENT
BASCULE PIER
PIERS 3 & 4
FIRE PROTECTION EQUIPMENT LEVEL PLAN

King County

FP06
SHEET 588 OF 667 SHEETS
316-63 (____)

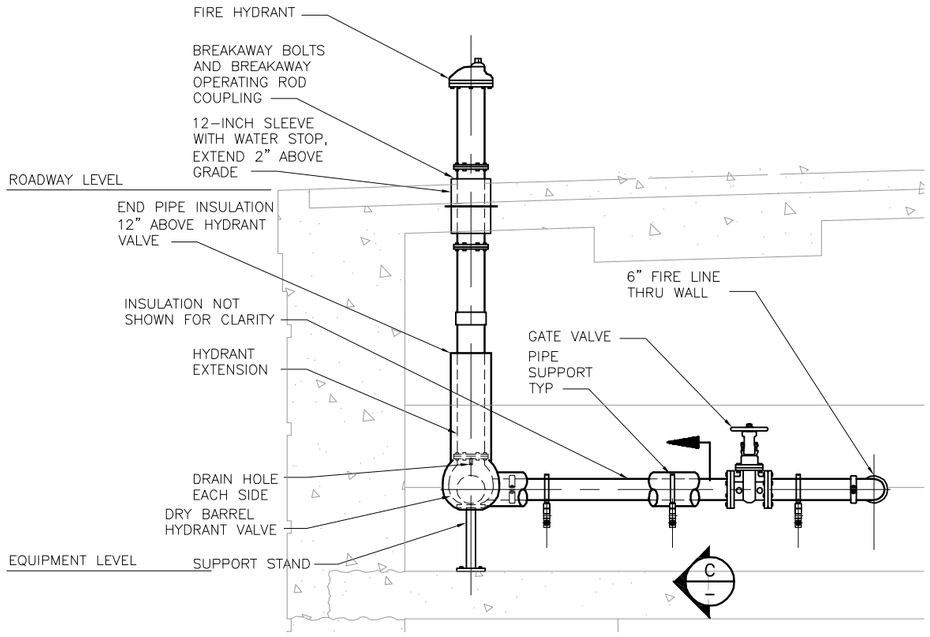

SECTION A / FP06

2 1 0 2 4
SCALE IN FEET

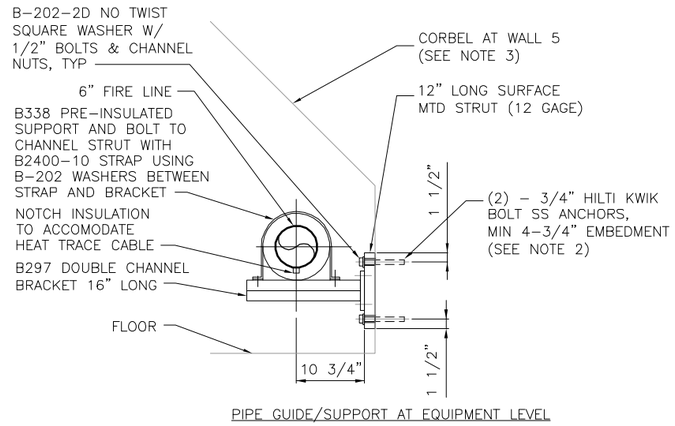

PIPE GUIDE/SUPPORT AT EQUIPMENT LEVEL

SECTION C / –

1 0 1 2
SCALE IN FEET

NOTES:

1. SEE HYDRANT DETAIL ON FP09 FOR PUMPER NOZZLE SIZE THREAD DIMENSIONS.
2. CONCRETE ANCHOR EMBEDMENT SHALL NOT BE LESS THAN INDICATED AND ANCHOR HOLE SHALL NOT EXCEED 6" LENGTH. OVERALL ANCHOR LENGTH SHALL SUIT INSTALLATION.
3. FIRE HYDRANT INSTALLATION SIMILAR AT OPPOSTIE SIDE OF BASCULE PIER (WALL 6). SEE BP SHEET FOR WALL CALLOUTS AND DETAILS.
4. HOT DIP GALVANIZE ALL SUPPORT ASSEMBLIES AFTER FABRICATION.

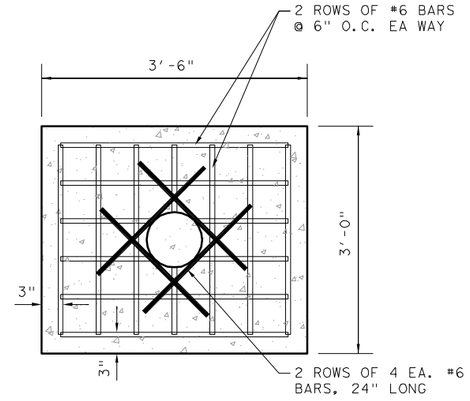

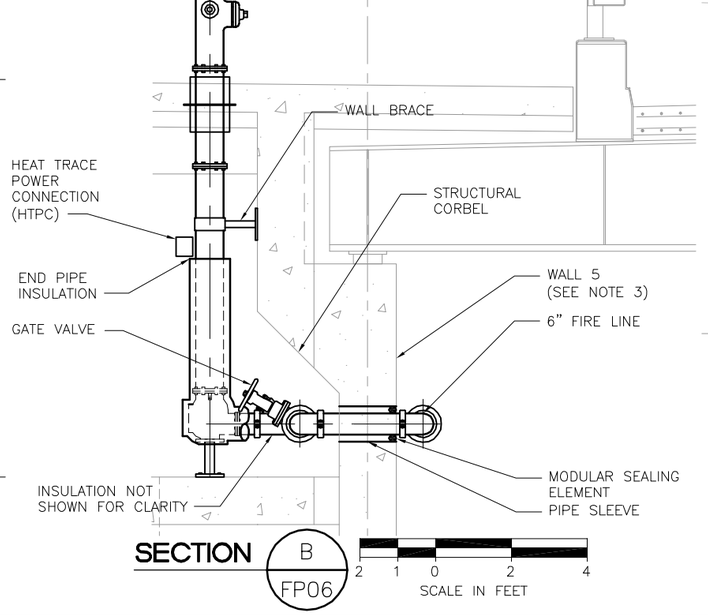

SECTION B / FP06

2 1 0 2 4
SCALE IN FEET

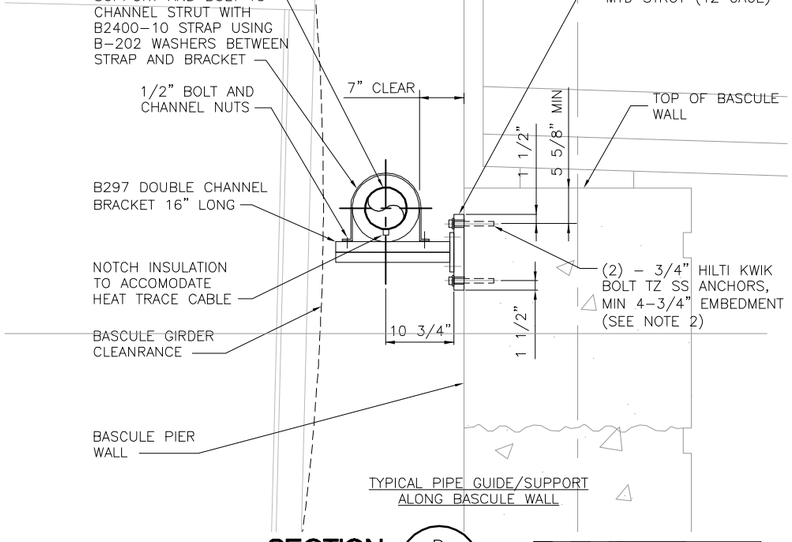

TYPICAL PIPE GUIDE/SUPPORT ALONG BASCULE WALL

SECTION D / FP06

1 0 1 2
SCALE IN FEET

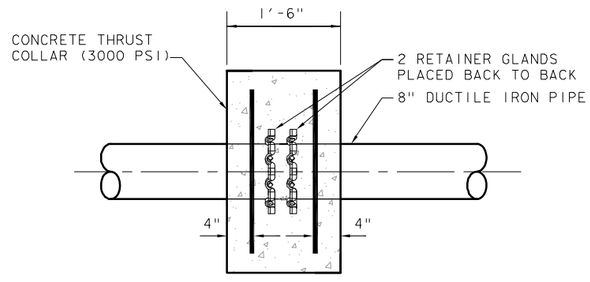

AXIAL THRUST BLOCK

DETAIL E / FP02 FP04

FIELD BOOK:					
SURVEYED:					
SURVEY BASE MAP:					
DESIGN ENTERED:	A. NAPIER	06/2009			
DESIGNED	D. PARKER	06/2009			
CHECKED:	J. CASEY	10/2009			
SUPERVISOR:	J. CASEY	1/2010	NUM.	REVISION	BY / DATE

DAVID B. PARKER — STATE OF WASHINGTON — 36243 — REGISTERED PROFESSIONAL ENGINEER

HNTB

FED. AID No.

PROJECT No. 300197

SURVEY No. 32–24–4–22

MAINTENANCE DIVISION No. 3

KING COUNTY DEPT. OF TRANSPORTATION
HAROLD TANIGUCHI, DIRECTOR

SOUTH PARK BRIDGE #3179 REPLACEMENT

FIRE PROTECTION SECTIONS

King County

FP07

SHEET 589 OF 667 SHEETS

316-63 (___)

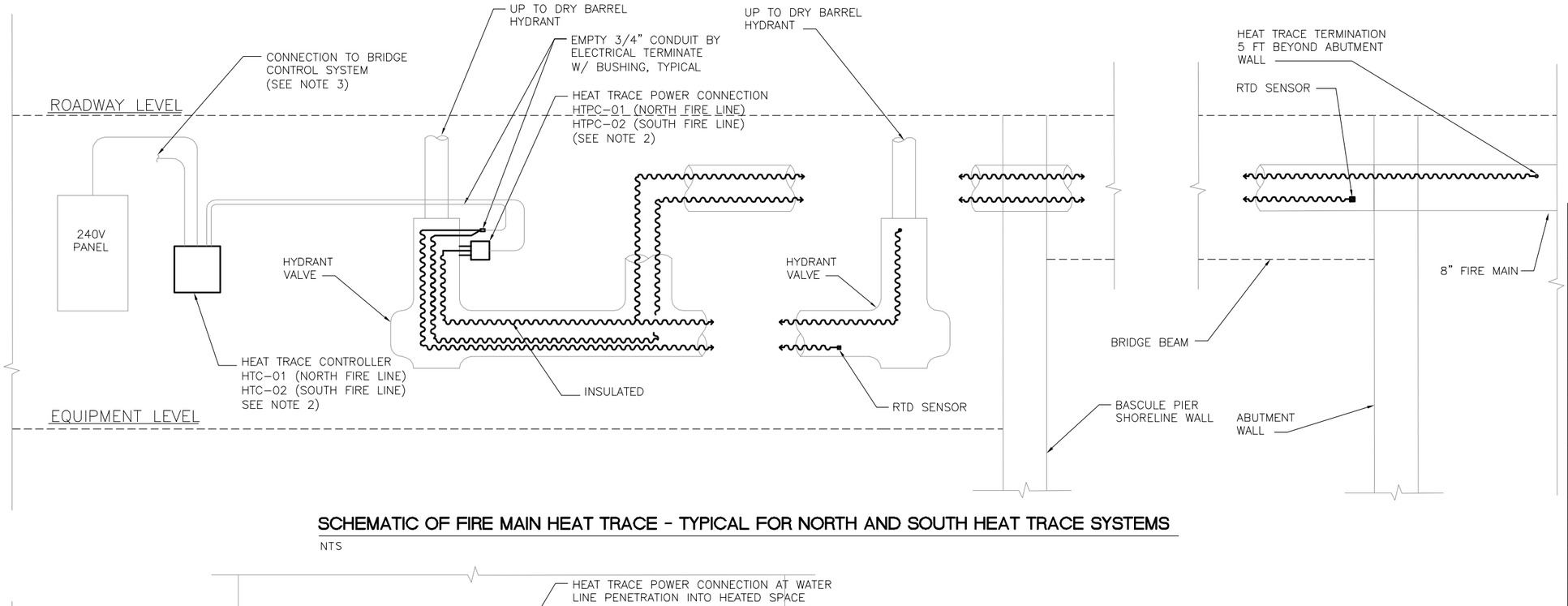

SCHEMATIC OF FIRE MAIN HEAT TRACE - TYPICAL FOR NORTH AND SOUTH HEAT TRACE SYSTEMS

NTS

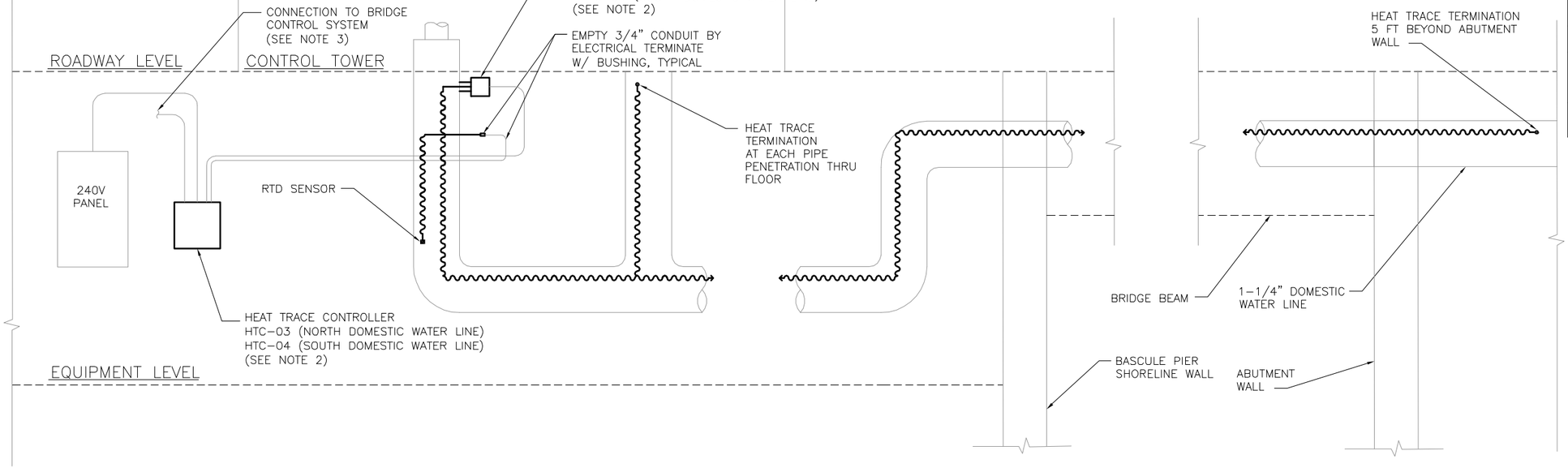

SCHEMATIC OF DOMESTIC WATER MAIN HEAT TRACE - TYPICAL FOR NORTH AND SOUTH HEAT TRACE SYSTEMS

NTS

NOTES:

1. SEE ELECTRICAL DRAWINGS BE06 AND BE07 FOR POWER CONNECTION TO HEAT TRACE CIRCUIT CONTROLLER AND HEAT TRACE POWER CONNECTION.
2. SEE FIRE PROTECTION PLAN FP06 FOR LOCATIONS OF HEAT TRACE CONTROLLERS AND HEAT TRACE POWER CONNECTIONS.
3. COMMON ALARM CONDITION INDICATED AT MESSAGE DISPLAY PANEL AT NORTH CONTROL TOWER.

HEAT TRACE SCHEDULE				
CONTROLLER MARK	HTC-01	HTC-02	HTC-03	HTC-04
POWER CONNECTION MARK	HTPC-01	HTPC-02	HTPC-03	HTPC-04
BASIS OF DESIGN MFR/MODEL	THERMON FLX	THERMON FLX	THERMONT FLX	THERMON FLX
TYPE	SELF-REGULATING	SELF-REGULATING	SELF-REGULATING	SELF-REGULATING
SERVES	NORTH FIRE LINE	SOUTH FIRE LINE	NORTH DOMESTIC WATER LINE	SOUTH DOMESTIC WATER LINE
QTY PARALLEL CABLES	1	1	1	1
ELECTRICAL				
W/FT	5	5	5	5
MAX CIRCUIT LENGTH, FT.	599	599	599	599
VOLT/PH/HZ	240/1/60	240/1/60	240/1/60	240/1/60
OVERCURRENT PROTECTION DEVICE RATING	30	30	30	30
CONTROLLER				
BASIS IF DESIGN MFR/MODEL	ENVIRONMENTAL TECHNOLOGY GPT-3	ENVIRONMENTAL TECHNOLOGY GPT-3	ENVIRONMENTAL TECHNOLOGY SST-2	ENVIRONMENTAL TECHNOLOGY SST-2
TEMPERATURE SENSOR	2 RDTS ON PIPE WALL	2 RDTS ON PIPE WALL	RTD PIPE WALL	RTD ON PIPE WALL

REMARKS:
1. CONTROLLER SHALL RPOVDE MONITORING FUNCTIONS AS REQUIRED BY SEATTLE FIRE CODE AND ADMINISTRATIVE RULES.
2. HEAT TRACE CONTROLLER SHALL BE IN NEMA 4X CONTROL ENCLOSURE.

FIELD BOOK:				
SURVEYED:				
SURVEY BASE MAP:				
DESIGN ENTERED:	A. NAPIER	06/2009		
DESIGNED	D. PARKER	06/2009		
CHECKED:	J. CASEY	10/2009		
SUPERVISOR:	J. CASEY	01/2010		
NUM.	REVISION		BY	DATE

DAVID B. PARKER — STATE OF WASHINGTON — 18749 — REGISTERED PROFESSIONAL ENGINEER

HNTB

FED. AID No.

PROJECT No. 300197

SURVEY No. 32-24-4-22

MAINTENANCE DIVISION No. 3

KING COUNTY DEPT. OF TRANSPORTATION
HAROLD TANIGUCHI, DIRECTOR

SOUTH PARK BRIDGE #3179 REPLACEMENT

FIRE PROTECTION HEAT TRACE DIAGRAM

King County

FP08

SHEET 590 OF 667 SHEETS

316-63 (____)

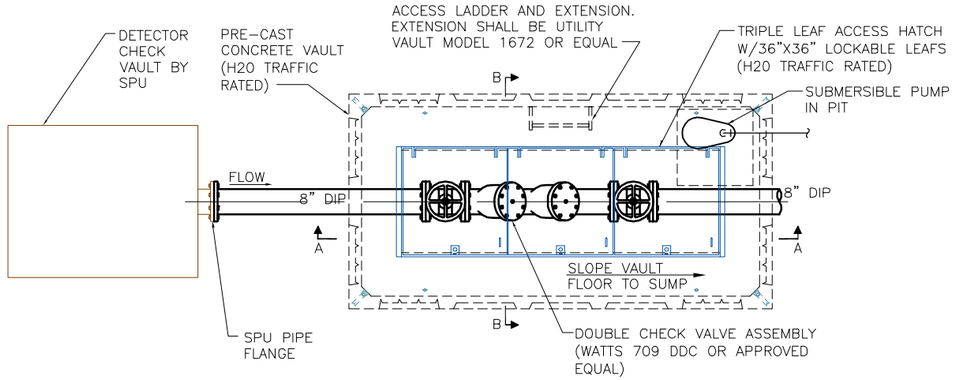

PLAN VIEW

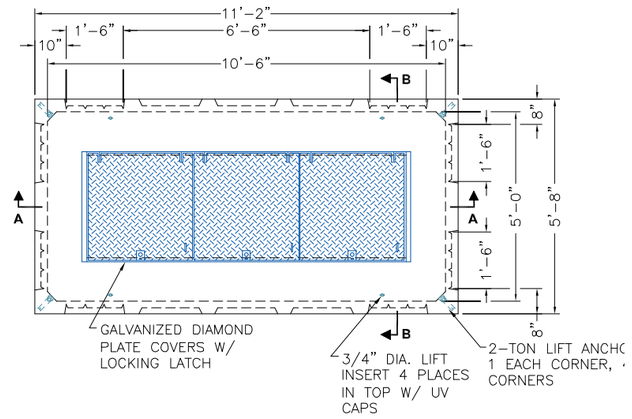

VAULT LID

NOTES:

1. 1ALL BURIED DI PIPE JOINTS SHALL BE RESTRAINED TYP.
2. STANDON S89 OR EQUAL FLANGE SUPPORT/BASE PLATE AND 2" IPS SCHD 40 PIPE. SECURE BASE TO FLOOR USING (2) 1/2" SS CONC. ANCHORS.
3. HOT DIP GALVANIZE ALL SUPPORT ASSEMBLIES AFTER FABRICATION.

HYDRANT NOTES:

1. 6"HYDRANT CONNECTION PIPE SHALL BE DIP CL52.
2. HYDRANT TEES SHALL BE SET HORIZONTALLY.
3. THE THREADED NIPPLE ON THE 4"PUMPER NOZZLE SHALL BE EQUIPPED WITH THE BLUNT START OR HIGBEE CUT.
4. THE 2-1/2"NIPPLES SHALL BE IN ACCORDANCE WITH THE NATIONAL FIRE PROTECTION ASSOCIATION BULLETIN NO 194 DATED 1974.
5. AFTER INSTALLATION, ALL MECHANICAL JOINT GLANDS AND SHACKLE RODS SHALL BE CLEANED AND COATED WITH TWO COATS OF ASPHALT, ROYSTON ROSKOTE #612XM.
6. AFTER BACKFILLING, THE OUTSIDE OF THE HYDRANT (ABOVE THE GROUND LINE) SHALL BE THOROUGHLY CLEANED AND PAINTED WITH ONE COAT OF KELLY-MOORE LUXLITE 43-616 CAT YELLOW.
7. PUMPER PORT TO FACE CURB.
8. RESTRAINT SHALL BE BY WEDGE RESTRAINT SYSTEM SUCH AS MEGALUG OR NIFLANGE.

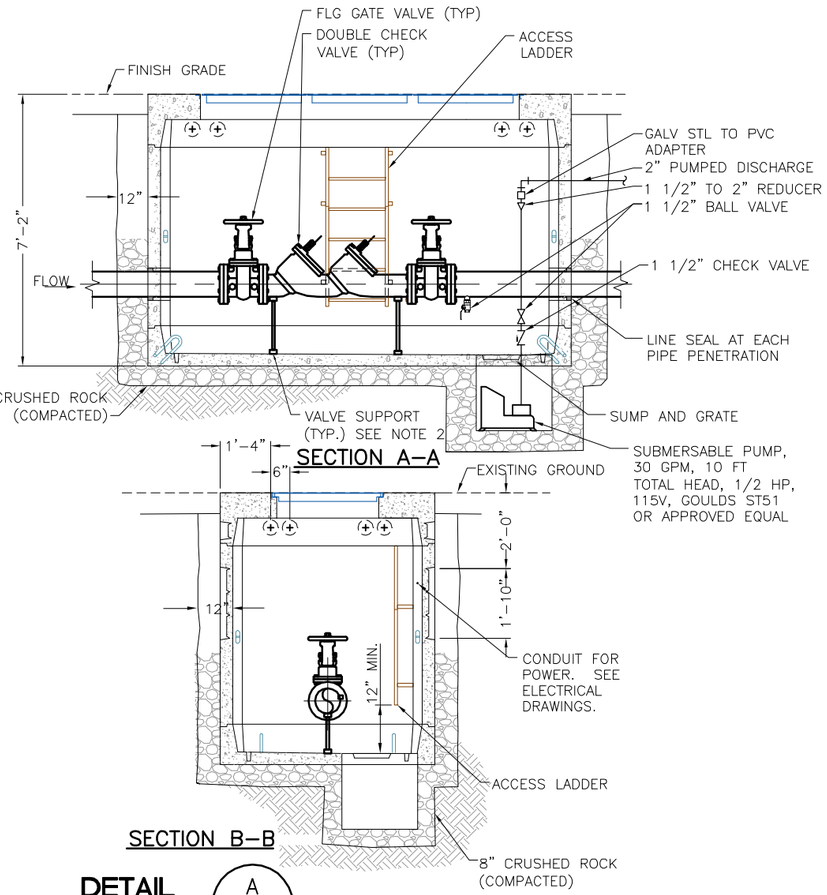

DETAIL A FP01 FP05

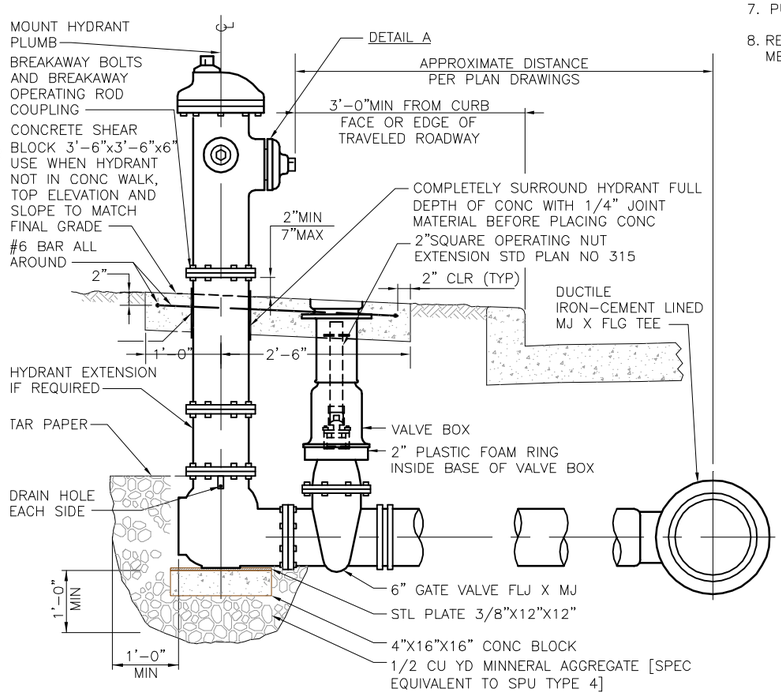

DETAIL B FP01 FP05

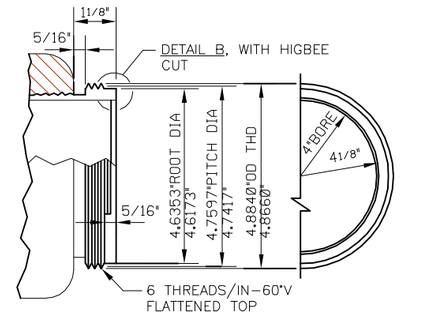

DETAIL A

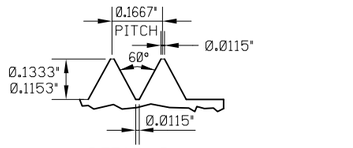

DETAIL B

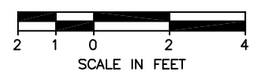

FIELD BOOK:					
SURVEYED:					
SURVEY BASE MAP:					
DESIGN ENTERED:	A. NAPIER	06/2009			
DESIGNED	D. PARKER	06/2009			
CHECKED:	J. CASEY	10/2009			
SUPERVISOR:	J. CASEY	01/2010	NUM.	REVISION	BY / DATE

DAVID B. PARKER — STATE OF WASHINGTON — REGISTERED PROFESSIONAL ENGINEER

HNTB

FED. AID No.

PROJECT No. 300197

SURVEY No. 32-24-4-22

MAINTENANCE DIVISION No. 3

KING COUNTY DEPT. OF TRANSPORTATION
HAROLD TANIGUCHI, DIRECTOR

SOUTH PARK BRIDGE #3179 REPLACEMENT

FIRE PROTECTION DETAILS – 1

King County

FP09

SHEET 591 OF 667 SHEETS

316-63 (___)

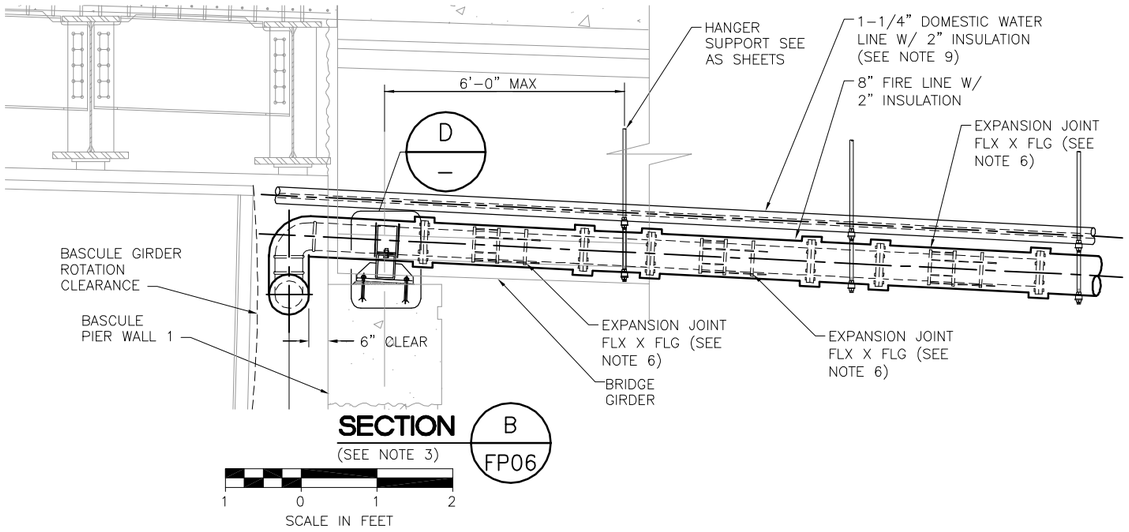

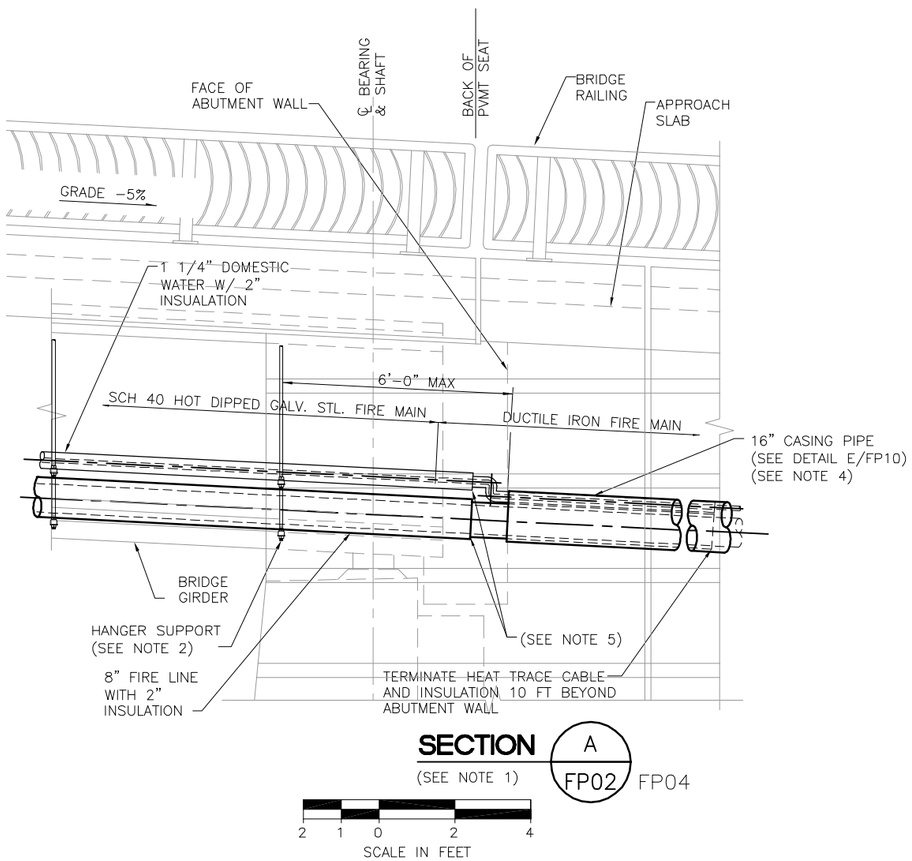

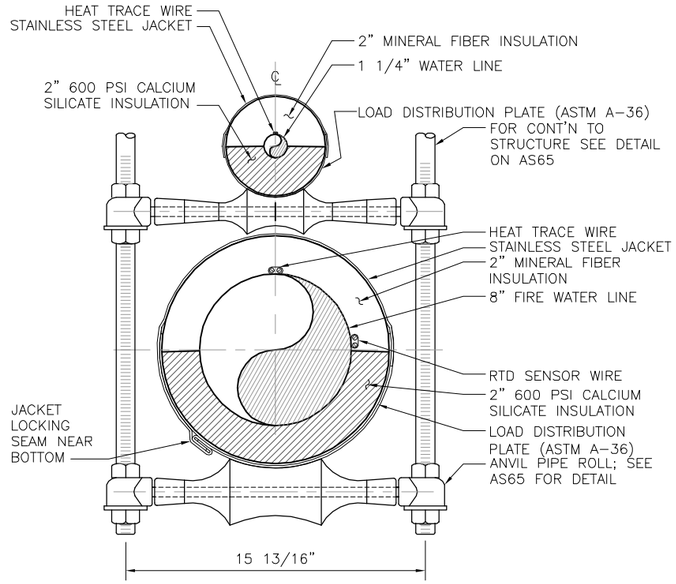

NOTES:

1. DETAIL IS TYPICAL FOR NORTH AND SOUTH BRIDGE ABUTMENTS.
2. SEE APPROACH STRUCTURE SHEETS FOR ELEVATION AND SUPPORT OF FIRE LINE.
3. DETAIL IS TYPICAL FOR NORTH AND SOUTH BASCULE PIER WALL 1.
4. SEE APPROACH STRUCTURE SHEETS FOR CASING PIPE INSTALLATION.
5. TRANSITION TO 1" THICK CELLULAR GLASS INSULATION AT CASING.
6. SET LIMIT RODS ON FLEXIBLE EXPANSION JOINT(S) TO ACCOMODATE 12 INCHES EXPANSION AND 12 INCHES COMPRESSION (24 INCHES TOTAL TRAVEL) WITH PIPE UNDER PRESSURE.
7. HOT DIP GALVANIZE ALL SUPPORT ASSEMBLIES AFTER FABRICATION.
8. PROVIDE 1/2" MAXIMUM THICKNESS OF NON-SHRINK GROUT BELOW PLATE.
9. REFER TO PM SHEET FOR LAYOUT OF DOMESTIC WATER LINE IN BASCULE PIER.

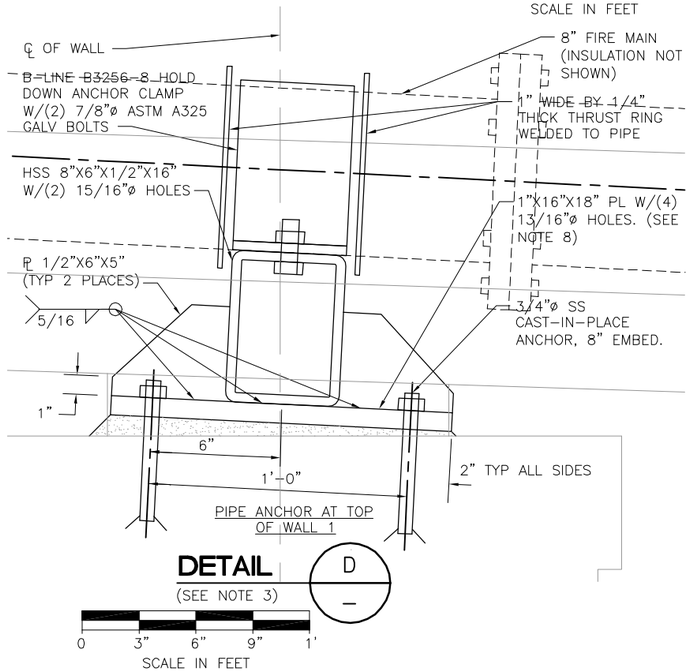

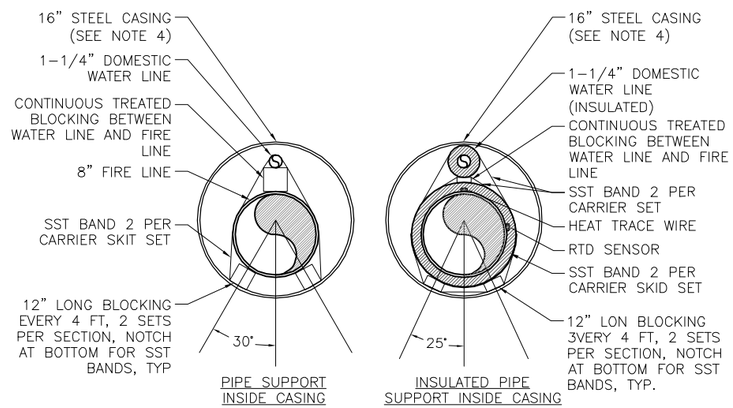

DETAIL NOTES:
1. 40 FT LENGTH DUCTILE IRON PIPE THROUGH 35 FT LONG CASING.
2. PLUG CASING AT ABUTMENT WALL FACE AND OPPOSITE END WITH GROUT TO 12-INCH DEPTH.

DETAIL E
NTS

FIELD BOOK:					
SURVEYED:					
SURVEY BASE MAP:					
DESIGN ENTERED:	A. NAPIER	06/2009			
DESIGNED	D. PARKER	06/2009			
CHECKED:	J. CASEY	10/2009			
SUPERVISOR:	J. CASEY	01/2010	NUM.	REVISION	BY / DATE

DAVID B. PARKER — STATE OF WASHINGTON — 36243 — REGISTERED PROFESSIONAL ENGINEER

HNTB

FED. AID No.

PROJECT No. 300197

SURVEY No. 32-24-4-22

MAINTENANCE DIVISION No. 3

KING COUNTY DEPT. OF TRANSPORTATION
HAROLD TANIGUCHI, DIRECTOR

SOUTH PARK BRIDGE #3179 REPLACEMENT

FIRE PROTECTION DETAILS – 2

King County

FP10

SHEET 592 OF 667 SHEETS

316-63 (____)

GENERAL MACHINERY NOTES

GENERAL:

A. ALL MACHINERY SHALL CONFORM TO THE AASHTO LRFD MOVABLE HIGHWAY BRIDGE DESIGN SPECIFICATIONS 2ND EDITION, 2007 WITH 2008 INTERIM REVISIONS. HEREIN REFERRED TO AS AASHTO SPECIFICATIONS
B. ALL WORK SHOWN ON SHEETS BM01 THROUGH BM13 ARE PAID FOR UNDER THE LUMP SUM BID ITEMS DRIVE MACHINERY, TRUNNION ASSEMBLY, AND SPAN LOCK.

ALTERNATE EQUIPMENT:

A. WHERE A PARTICULAR MANUFACTURER'S PRODUCT HAS BEEN SPECIFIED AS SUITABLE EQUIPMENT, ANOTHER MANUFACTURER'S EQUIVALENT PRODUCT MAY BE SUBSTITUTED SUBJECT TO THE APPROVAL OF THE ENGINEER.
B. THE CONTRACTOR SHALL BEAR ALL COSTS ASSOCIATED WITH MODIFICATIONS OR ADJUSTMENT TO ALTERNATE EQUIPMENT REQUIRED TO MEET THE REQUIREMENTS OF THE CONTRACT.

MACHINERY COMPONENTS:

A. DESIGN TORQUE AND HORSEPOWER REQUIREMENTS SHOWN IN THE MACHINERY SCHEDULE ARE MINIMUM ACCEPTABLE PRIOR TO THE APPLICATION OF THE MANUFACTURERS' RECOMMENDED SERVICE FACTORS.

MACHINERY ATTACHMENT:

A. WHERE SPECIFIED ON THE PLANS, MACHINERY ITEMS SHALL BE ATTACHED TO SUPPORTS BY MEANS OF TURNED BOLTS HAVING SHANKS OF DIAMETER SPECIFIED HEREIN WHICH ARE $\frac{1}{16}$" LARGER THAN THE THREADED DIAMETER. TURNED BOLTS SHALL BE MANUFACTURED FROM BLANKS LARGER IN DIAMETER THAN THE SHANKS AND MEET THE REQUIREMENTS OF ASTM A449. THE SIZE OF BOLTS SHALL BE AS RECOMMENDED BY THE RESPECTIVE EQUIPMENT MANUFACTURER OR AS DETAILED IN THE DRAWINGS, WHICHEVER IS LARGER. HOLES IN SUPPORTS SHALL BE FIELD DRILLED AND REAMED AFTER PROPER ALIGNMENT. ALL TURNED BOLTS SHALL HAVE AN ANSI LC6 FIT WITH THE CONNECTING MEMBER. ONE HARDENED STEEL WASHER CONFORMING TO ASTM F436 SHALL BE REQUIRED BENEATH THE TURNING ELEMENT. TWO HEAVY HEX NUTS CONFORMING TO ASTM A563 SHALL BE REQUIRED FOR ALL MACHINERY CONNECTIONS.
B. ALL FIELD CONNECTIONS FOR STEEL SUPPORTS SHALL BE MADE WITH HIGH STRENGTH BOLTS CONFORMING TO ASTM A325. BOLT SPACING SHALL BE IN ACCORDANCE WITH DESIGN DRAWINGS AND APPROVED SHOP DRAWINGS. UNLESS OTHERWISE SHOWN, BOLTED CONNECTIONS SHALL BE MADE WITH $\frac{7}{8}$" DIAMETER HIGH STRENGTH BOLTS. ONE HARDENED STEEL WASHER CONFORMING TO ASTM F436 SHALL BE REQUIRED BENEATH THE TURNING ELEMENT. BOLTED CONNECTIONS ARE DESIGNED AS FRICTION TYPE.
C. FULL SIZE SHIMS SHALL BE PROVIDED AS REQUIRED AT THE MACHINERY SUPPORTS. THE SHIMS SHALL BE THE THICKNESS NECESSARY FOR ALIGNMENT OF MACHINERY UNDER FULL SPAN DEAD LOAD CONDITIONS.
D. ALL STEEL FOR MACHINERY SUPPORTS SHALL BE SO POSITIONED IN THE MEMBERS SO AS TO PLACE THE DIRECTION OF FINISH ROLLING PARALLEL TO THE DIRECTION OF PRIMARY STRESS.

FITS AND FINISHES:

FITS AND FINISHES OF ALL MACHINERY ITEMS AND MACHINERY SUPPORTS SHALL BE AS SPECIFIED IN THE AASHTO SPECIFICATIONS AND CONFORM TO ANSI B4.1 AND ANSI B46.1, RESPECTIVELY.

ELECTRICAL COMPONENTS:

FOR DETAILS, DESIGN REQUIREMENTS AND SUITABLE EQUIPMENT PERTAINING TO THE DRIVE MOTORS, BRAKES, BRAKE WHEEL COUPLINGS, TACHOMETER, AND LIMIT SWITCHES, SEE THE ELECTRICAL DRAWINGS AND ELECTRICAL SPECIAL PROVISIONS.

ANGLE OF OPENING:

THE NORMAL ANGLE OF OPENING IS APPROXIMATELY 75 DEGREES.

TIME OF OPERATION:

THE APPROXIMATE TIME REQUIRED TO RAISE OR LOWER THE SPAN 75 DEGREES ABOVE SEAT (NOT INCLUDING TIME FOR LOCKING OR UNLOCKING THE SPAN) IS AS FOLLOWS:

A. MAIN DRIVE MOTOR OPERATION IS APPROXIMATELY 1 MIN. 30 SEC. AT OVERSPEED, INCLUDING ACCELERATION AND DECELERATION.
B. AUXILIARY DRIVE MOTOR OPERATION IS APPROXIMATELY 5 MIN.

MISCELLANEOUS:

A. WHERE WELDS ARE NOT SHOWN, USE $\frac{5}{16}$" FILLET WELDS FOR SHOP FABRICATION.
B. SHIM PACKS SHALL BE CAPABLE OF ADJUSTMENT FROM 0 INCHES TO TWICE THE NOMINAL SHIM PACK DIMENSION IN $\frac{1}{64}$" INCREMENTS. FOR EXAMPLE: EACH $\frac{1}{2}$" NOMINAL SHIM PACK SHALL CONSIST OF FULL LENGTH AND WIDTH PLATES WITH HOLES DRILLED IN ALL PLATES. FURNISH ONE $\frac{1}{2}$", ONE $\frac{1}{4}$", ONE $\frac{1}{8}$", ONE $\frac{1}{16}$", ONE $\frac{1}{32}$" AND TWO $\frac{1}{64}$" PLATES. THE CONTRACTOR SHALL AUGMENT SHIM PACKS WITH PRECISION THICKNESS SHIMS IF REQUIRED FOR OPTIMUM ADJUSTMENT.
C. SHIM PLATES AND FILL PLATES LESS THAN $\frac{1}{4}$" THICK SHALL BE STAINLESS STEEL MEETING THE REQUIREMENTS OF ASTM A480 OR A240.
D. MISCELLANEOUS SHIMS AND BOLTS IN ADDITION TO THOSE DETAILED ON THE PLANS WILL BE REQUIRED AND SHALL BE PROVIDED BY THE CONTRACTOR.
E. KEYS SHALL BE AS SPECIFIED ON THE PLANS. MISCELLANEOUS KEYS MAY BE REQUIRED AND SHALL BE PROVIDED BY THE CONTRACTOR PER THE MANUFACTURER'S RECOMMENDATIONS.
F. ALL MISCELLANEOUS HARDWARE WHICH IS SPECIFIED TO BE GALVANIZED SHALL BE COATED IN CONFORMANCE WITH ASTM A153 AFTER FABRICATION. DAMAGED GALVANIZED COATS THAT ARE NOT TO BE EMBEDDED IN MORE THAN 3" OF CONCRETE SHALL BE REPAIRED WITH COLD APPLIED ZINC RICH, ORGANIC PAINT, USING AN APPROVED METHOD OF REPAIR.

INDEX OF BRIDGE MECHANICAL SHEETS

BM01	GENERAL MACHINERY NOTES AND INDEX OF SHEETS
BM02	OPERATING MACHINERY SCHEDULE
BM03	OPERATING MACHINERY LAYOUT
BM04	OPERATING MACHINERY SECTIONS–1
BM05	OPERATING MACHINERY SECTIONS–2
BM06	OPERATING MACHINERY DETAILS
BM07	OPERATING MACHINERY SUPPORTS–1
BM08	OPERATING MACHINERY SUPPORTS–2
BM09	RACK ASSEMBLY AND DETAILS
BM10	TRUNNION SHAFT ASSEMBLY AND DETAILS
BM11	TRUNNION BEARING ASSEMBLY AND DETAILS
BM12	SPAN LOCK ASSEMBLY
BM13	SPAN CONTROL MACHINERY AND LUBRICATION SYSTEM

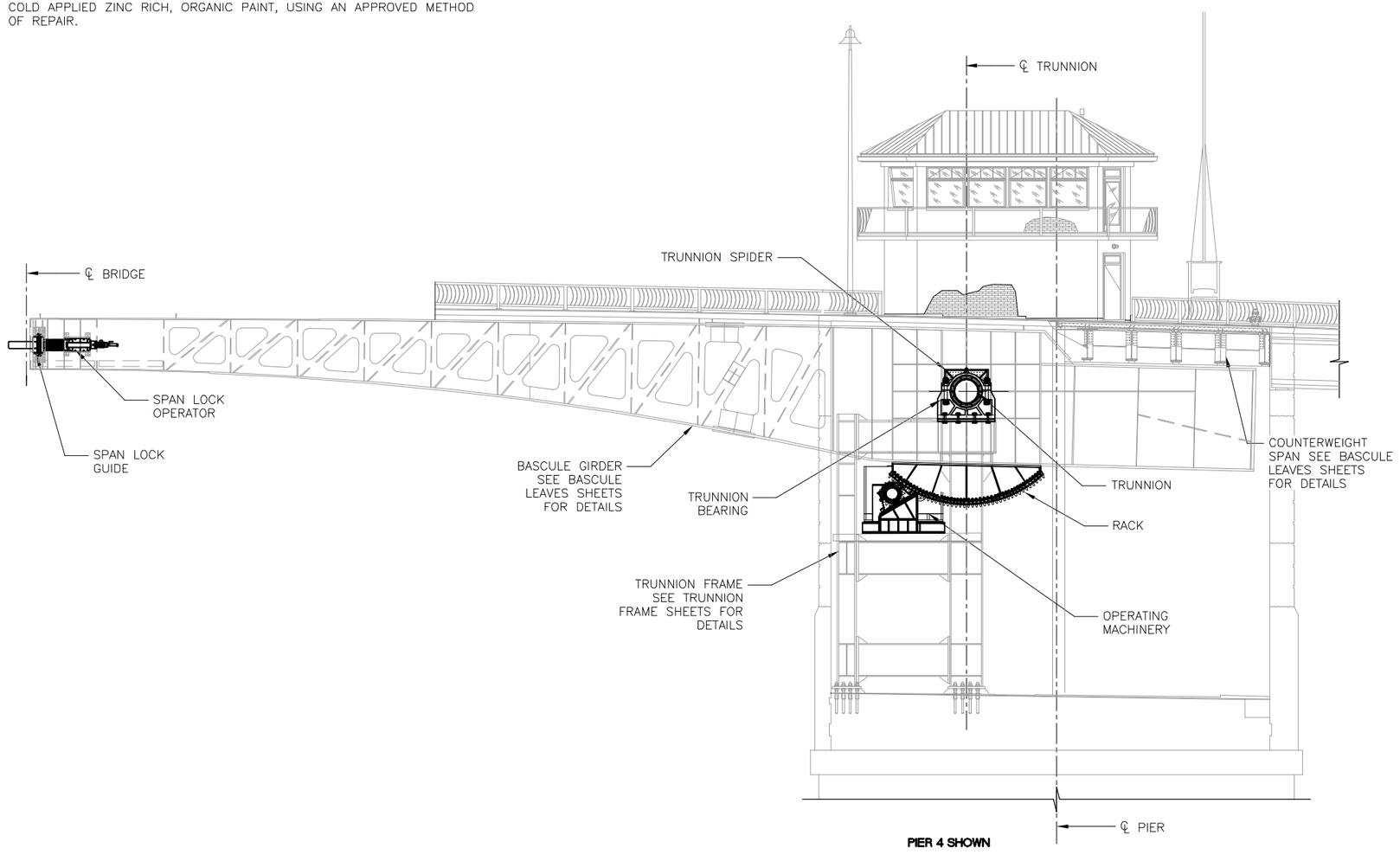

PIER 4 SHOWN

FIELD BOOK:					
SURVEYED:					
SURVEY BASE MAP:					
DESIGN ENTERED:	D. RINEHART	8/2009			
DESIGNED	D APPELBAUM	8/2009			
CHECKED:	M. GREEN	12/2009			
SUPERVISOR:	M. GREEN	01/2010	NUM.	REVISION	BY / DATE

MARK WILLIAM GREEN — STATE OF WASHINGTON — REGISTERED PROFESSIONAL ENGINEER

FED. AID No.

PROJECT No. 300197

SURVEY No. 32-24-4-22

MAINTENANCE DIVISION No. 3

KING COUNTY DEPT. OF TRANSPORTATION
HAROLD TANIGUCHI, DIRECTOR

SOUTH PARK BRIDGE #3179 REPLACEMENT

GENERAL MACHINERY NOTES AND INDEX OF SHEETS

King County

BM01

SHEET 593 OF 667 SHEETS

316-63 (___)

MACHINERY SCHEDULE

ITEM NO.	ITEM	NO. REQ'D	DESIGN REQUIREMENTS	SUITABLE EQUIPMENT
M1	MAIN DRIVE MOTOR	4	75 HP, 850 RPM, TEFC, CONSTANT TORQUE, SEVERE DUTY, DC MOTOR. MOTOR SHALL BE SUITABLE FOR OPERATION AT 1150 RPM OVERSPEED. SEE ELECTRICAL SPECIAL PROVISIONS FOR ADDITIONAL REQUIREMENTS. FURNISHED BY ELECTRICAL, INSTALLED BY MECHANICAL.	SEE ELECTRICAL SPECIAL PROVISIONS
M2	AUXILIARY DRIVE MOTOR	2	50/25 HP, 1800/900 RPM, TEFC, CONSTANT TORQUE, TWO SPEED. SEVERE DUTY AC MOTOR WITH SERVICE FACTOR OF 1.15. SEE ELECTRICAL SPECIAL PROVISIONS FOR ADDITIONAL REQUIREMENTS. FURNISHED BY ELECTRICAL, INSTALLED BY MECHANICAL.	SEE ELECTRICAL SPECIAL PROVISIONS
BR1	MOTOR BRAKE	4	13 INCH DRUM THRUSTOR BRAKE, 660 FT–LB CAPACITY, ENCLOSURE, HAND RELEASE, AND LIMIT SWITCHES. FURNISHED BY ELECTRICAL, INSTALLED BY MECHANICAL.	SEE ELECTRICAL SPECIAL PROVISIONS
BR2	MACHINERY BRAKE	4	23 INCH DRUM THRUSTOR BRAKE, 5000 FT–LB CAPACITY, ENCLOSURE, HAND RELEASE, AND LIMIT SWITCHES. FURNISHED BY ELECTRICAL, INSTALLED BY MECHANICAL.	SEE ELECTRICAL SPECIAL PROVISIONS
R1	CENTRAL REDUCER	2	PARALLEL SHAFT DIFFERENTIAL DOUBLE REDUCTION REDUCER. TWO MAIN DRIVE INPUT SHAFTS, ONE SPIRAL BEVEL INPUT SHAFT, TWO OUTPUT SHAFTS. MAIN DRIVE OVERSPEED 1150 RPM WITH A TOTAL REDUCTION OF 31.39:1. SPIRAL BEVEL INPUT SHAFT SPEED 346 RPM. SPIRAL BEVEL INPUT REDUCTION 1.225:1 FOR A TOTAL REDUCTION OF 38.45:1. MINIMUM OUTPUT TORQUE 252,000 IN–LB. EACH OUTPUT SHAFT (504,000 IN–LB TOTAL).	EARLE GEAR SPECIAL
R2	SECONDARY REDUCER	4	PARALLEL SHAFT DOUBLE REDUCTION REDUCER WITH REDUCTION OF 20.93:1. ONE INPUT SHAFT, ONE OUTPUT SHAFT. INPUT SPEED 38 RPM (MAIN DRIVE OVERSPEED) MINIMUM OUTPUT TORQUE 5,100,000 IN–LB .	EARLE GEAR SPECIAL
R3	AUXILIARY REDUCER	2	RIGHT ANGLE SINGLE REDUCTION REDUCER WITH A REDUCTION OF 5.06:1. ONE INPUT SHAFT, ONE OUTPUT SHAFT INPUT SPEED 1800 RPM MINIMUM OUTPUT TORQUE 19,000 IN–LB.	FALK GHB2070
R4	SPAN CONTROL REDUCER	2	RIGHT ANGLE BEVEL GEAR REDUCER. RATIO OF 1:1	BOSTON GEAR R1214
SH1	FLOATING SHAFT	4	6.5 INCH DIAMETER	SEE SHEET BM06 FOR DETAILS
SH2	TRUNNION SHAFT	4	36 INCH DIAMETER	SEE SHEET BM10 FOR DETAILS
SP1	TRUNNION SPIDER	8	TRUNNION SHAFT SUPPORT WELDMENT BOLTED TO GIRDER WEBS 4 INTERIOR AND 4 EXTERIOR REQUIRED.	SEE SHEET BM10 FOR DETAILS
CP1	MAIN MOTOR COUPLING	4	FLEXIBLE STEEL GRID DRUM BRAKE COUPLING WITH 13x5¾ INCH DRUM. MINIMUM BRAKING TORQUE CAPACITY OF 750 FT–LBS. MINIMUM COUPLING CAPACITY OF 15,000 IN–LBS. FURNISHED BY ELECTRICAL INSTALLED BY MECHANICAL.	SEE ELECTRICAL SPECIAL PROVISIONS
CP2	FLOATING SHAFT COUPLING	4	SINGLE ENGAGEMENT GEAR COUPLING WITH TORQUE RATING OF 371,700 IN–LB.	FALK 1045G52
CP3	FLOATING SHAFT BRAKE WHEEL COUPLING	4	SINGLE ENGAGEMENT GEAR DRUM BRAKE COUPLING WITH 23 INCH BRAKE WHEEL. MINIMUM BRAKING TORQUE CAPACITY OF 17,000 FT–LBS. MINIMUM COUPLING CAPACITY OF 800,100 IN–LBS.	SEE ELECTRICAL SPECIAL PROVISIONS
CP4	PINION SHAFT COUPLING	4	DOUBLE ENGAGEMENT GEAR COUPLING WITH TORQUE RATING OF 9,702,000 IN–LB.	FALK 1150G20
CP5	AUXILIARY MOTOR COUPLING	2	FLEXIBLE STEEL GRID COUPLING WITH TORQUE RATING OF 18,150 IN–LB.	FALK 1080T10
CP6	TACHOMETER COUPLING	4	FURNISHED BY MECHANICAL. COORDINATE WITH ELECTRICAL.	SEE ELECTRICAL SPECIAL PROVISIONS
CP7	SPAN CONTROL COUPLING	4	FLEXIBLE COUPLING	DODGE PX40FBX SEE SHEET BM13
B1	PINION SHAFT BEARING	4 FIXED 4 FLOAT	PILLOW BLOCK WITH ADAPTER MOUNTED SPHERICAL ROLLER BEARING FOR 18 INCH SHAFT. PROVIDE CAST STEEL 4 BOLT HEAVY DUTY BASE AND CAP. PROVIDE BEARING WITH A MINIMUM BASIC DYNAMIC CAPACITY OF 863,000 LBS AND A MINIMUM L–10 LIFE OF 40,000 HOURS.	SKF OR TIMKEN SDAFS 23096K–18
B2	TRUNNION BEARING	8	34 INCH DIAMETER BRONZE BUSHED BEARING	SEE SHEET BM11 FOR DETAILS
P1	PINION SHAFT	4	18 TOOTH 20 DEGREE INVOLUTE FULL DEPTH TOOTH SPUR GEAR. 6" CIRCULAR PITCH INTEGRAL WITH 18" SHAFT	SEE SHEET BM06 FOR DETAILS
G1	RACK	4	20 DEGREE INVOLUTE FULL DEPTH SPUR GEAR. 6" CIRCULAR PITCH.	SEE SHEET BM09 FOR DETAILS
CL1	CLUTCH	2	ELECTRICALLY ENGAGED CLUTCH WITH TORQUE CAPACITY OF 2700 FT–LB. FURNISH AC–DC RECTIFIER REQUIRED TO OPERATE CLUTCH. FURNISH DUST TIGHT ENCLOSURE WITH STRIP HEATERS.	STEARNS: STYLE E, CLASS S, SIZE 1406
T1	TACHOMETER/ OVERSPEED SWITCH	4	FURNISHED BY ELECTRICAL, INSTALLED BY MECHANICAL.	SEE ELECTRICAL SPECIAL PROVISIONS
LS1	SPAN CONTROL LIMIT SWITCH	2	LIMIT SWITCH SUPPLIED BY ELECTRICAL INSTALLED BY MECHANICAL. ADAPTER SHAFT AND SUPPORT SUPPLIED BY MECHANICAL.	SEE ELECTRICAL SPECIAL PROVISIONS SEE SHEET BM13

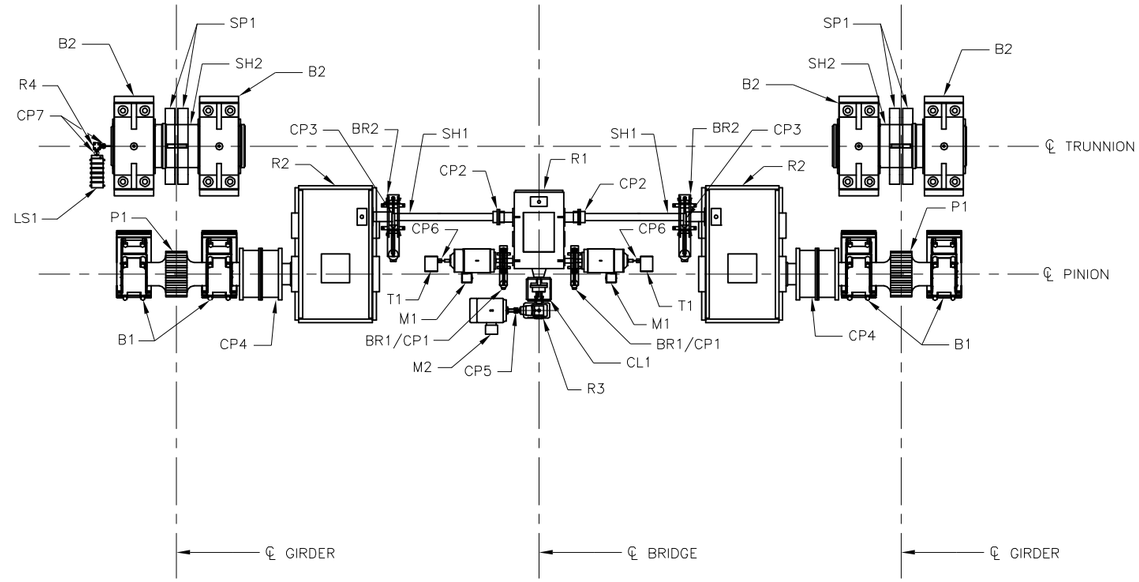

MACHINERY PLAN

(G1 NOT SHOWN FOR CLARITY)

0 6 12

SCALE IN FEET

FIELD BOOK:			
SURVEYED:			
SURVEY BASE MAP:			
DESIGN ENTERED:	D. RINEHART	8/2009	
DESIGNED	D. APPELBAUM	8/2009	
CHECKED:	M. GREEN	12/2009	
SUPERVISOR:	M. GREEN	01/2010	

NUM.	REVISION	BY	DATE

MARK WILLIAM GREEN — STATE OF WASHINGTON — 45664 — REGISTERED PROFESSIONAL ENGINEER

HNTB

FED. AID No.

PROJECT No. 300197

SURVEY No. 32–24–4–22

MAINTENANCE DIVISION No. 3

KING COUNTY DEPT. OF TRANSPORTATION

HAROLD TANIGUCHI, DIRECTOR

SOUTH PARK BRIDGE #3179 REPLACEMENT

OPERATING MACHINERY SCHEDULE

King County

BM02

SHEET 594 OF 667 SHEETS

316–63 (___)

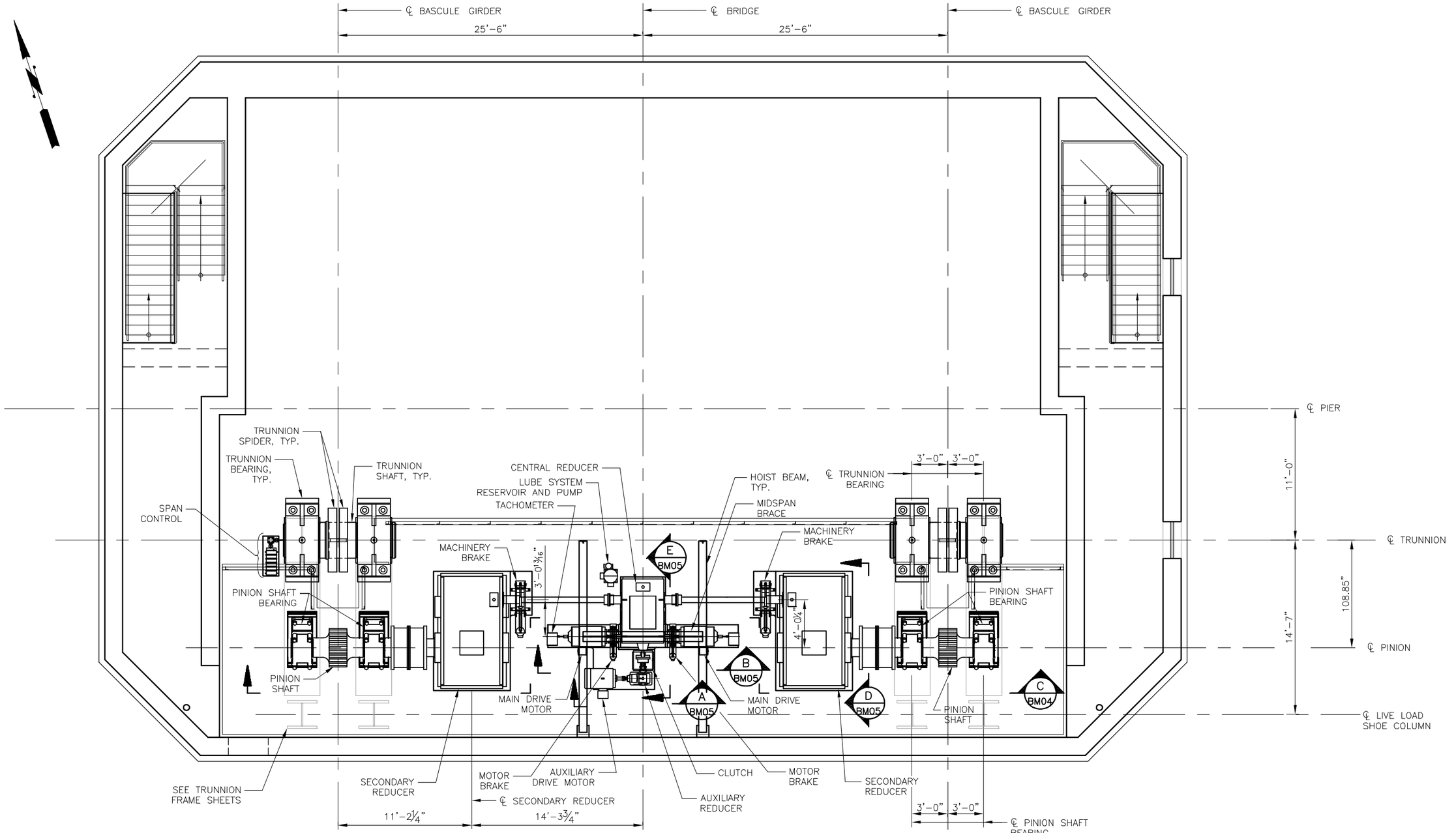

MACHINERY LAYOUT

PIER 4 SHOWN

(PIER 3 ROTATED 180°)

BASCULE GIRDERS AND COUNTERWEIGHT OMITTED FOR CLARITY

0 4 8

SCALE IN FEET

FIELD BOOK:		
SURVEYED:		
SURVEY BASE MAP:		
DESIGN ENTERED:	D. RINEHART	10/2009
DESIGNED	M. GREEN	10/2009
CHECKED:	D. APPELBAUM	12/2009
SUPERVISOR:	M. GREEN	01/2010

NUM.	REVISION	BY	DATE

MARK WILLIAM GREEN, STATE OF WASHINGTON, 46664, REGISTERED PROFESSIONAL ENGINEER

HNTB

FED. AID No.

PROJECT No. 300197

SURVEY No. 32-24-4-22

MAINTENANCE DIVISION No. 3

KING COUNTY DEPT. OF TRANSPORTATION

HAROLD TANIGUCHI, DIRECTOR

SOUTH PARK BRIDGE #3179 REPLACEMENT

OPERATING MACHINERY LAYOUT

King County

BM03

SHEET 595 OF 667 SHEETS

316-63 (____)

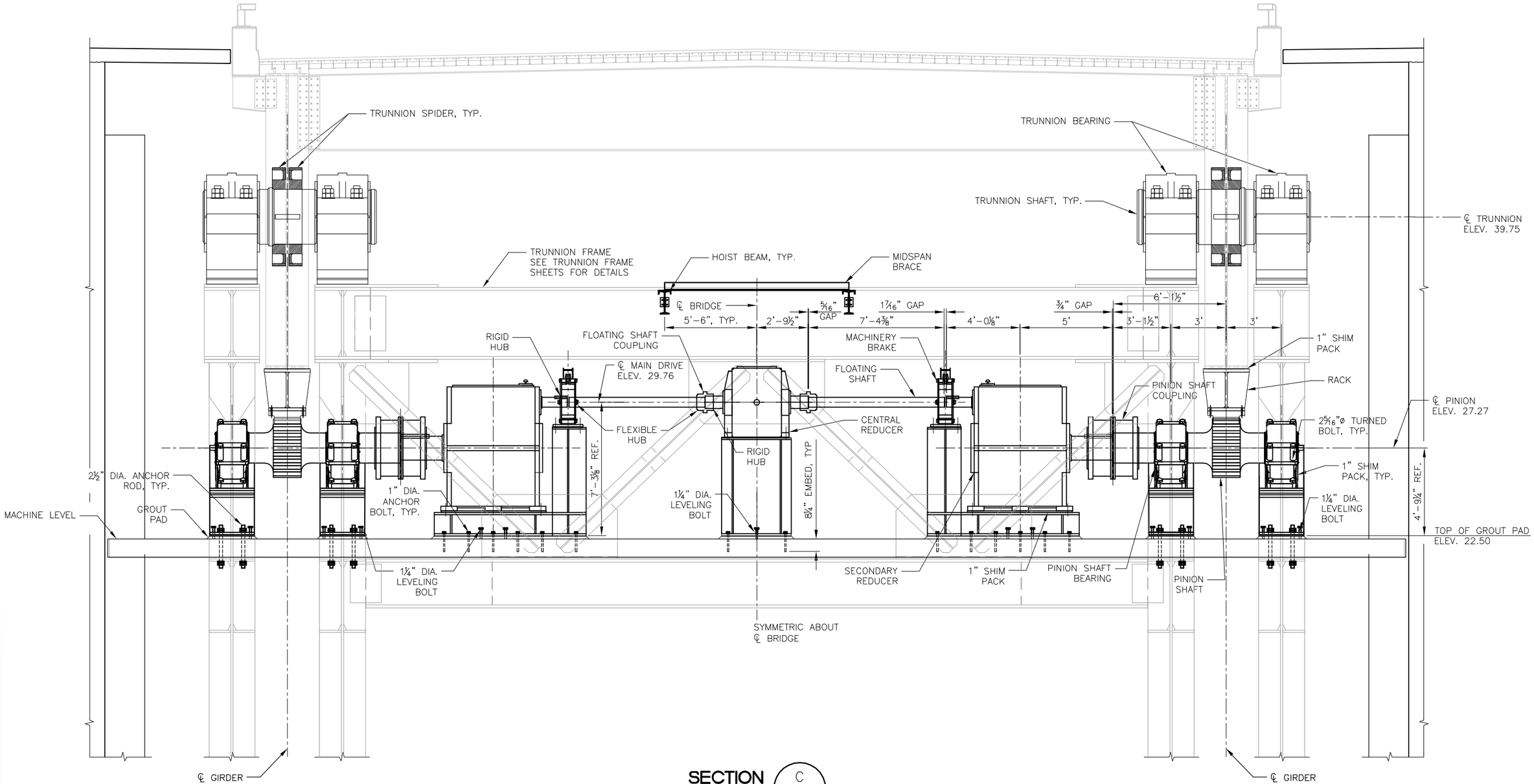

SECTION C
BM03

2 1 0 2 4 6
SCALE IN FEET

NOTES:
ANCHOR BOLTS TO BE HILTI HAS/HVA ANCHORS OR EQUIVALENT.
FOR HOIST BEAM DETAILS SEE SHEET BM05.
FOR CATWALK AND ACCESS DETAILS SEE TRUNNION FRAME SHEETS.
SUPPORT LEVELING BOLT QUANITITY AND SPACING AS REQUIRED.

FIELD BOOK:					
SURVEYED:					
SURVEY BASE MAP:					
DESIGN ENTERED:	D. RINEHART	10/2009			
DESIGNED	M. GREEN	10/2009			
CHECKED:	D. APPELBAUM	12/2009			
SUPERVISOR:	M. GREEN	01/2010			

NUM.	REVISION	BY	DATE

MARK WILLIAM GREEN — STATE OF WASHINGTON — 45654 — REGISTERED PROFESSIONAL ENGINEER

HNTB

FED. AID No.
PROJECT No. 300197
SURVEY No. 32-24-4-22
MAINTENANCE DIVISION No. 3

KING COUNTY DEPT. OF TRANSPORTATION
HAROLD TANIGUCHI, DIRECTOR

SOUTH PARK BRIDGE #3179 REPLACEMENT

OPERATING MACHINERY SECTIONS-1

King County

BM04

SHEET 596 OF 667 SHEETS

316-63 (___)

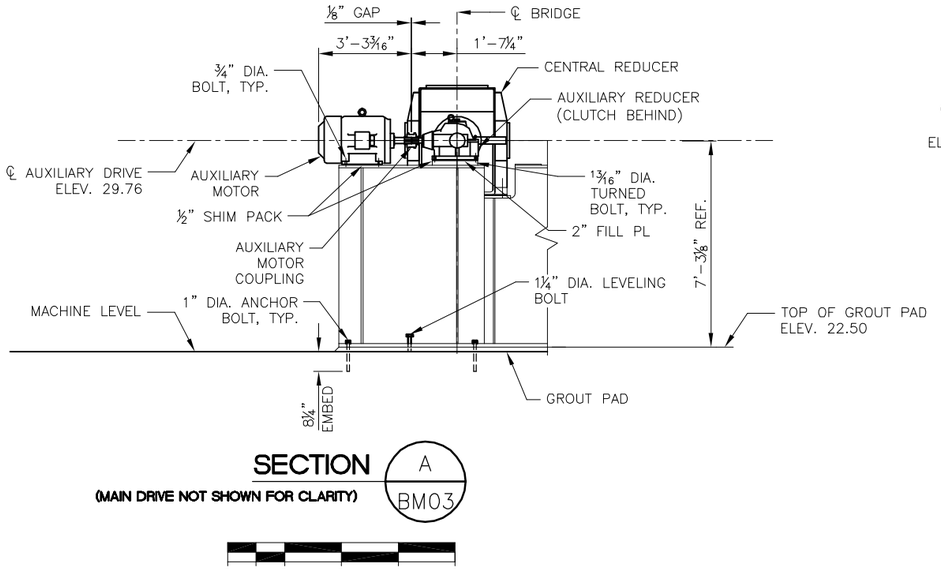

SECTION A BM03

(MAIN DRIVE NOT SHOWN FOR CLARITY)

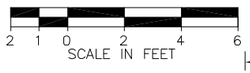

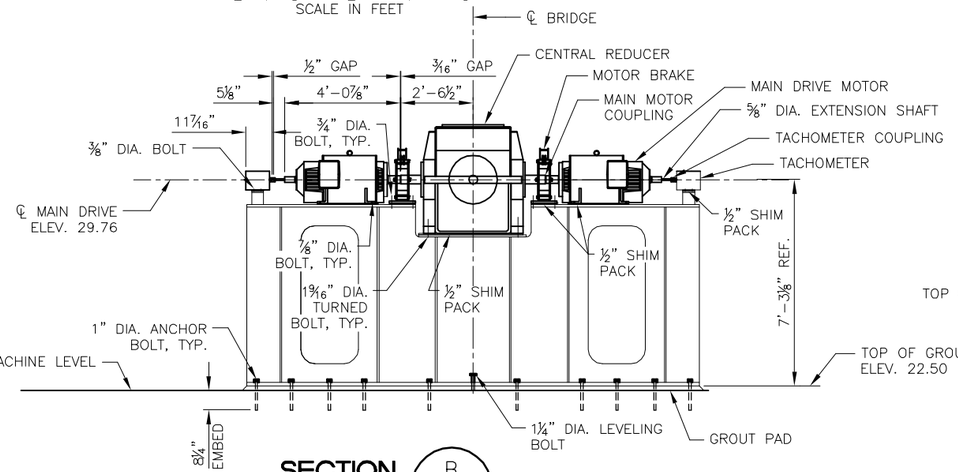

SECTION B BM03

(AUXILIARY DRIVE NOT SHOWN FOR CLARITY)

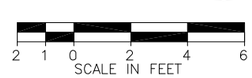

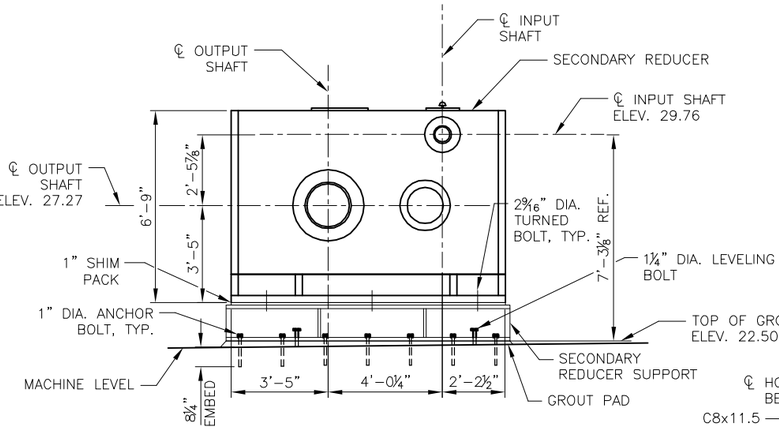

SECTION D BM03

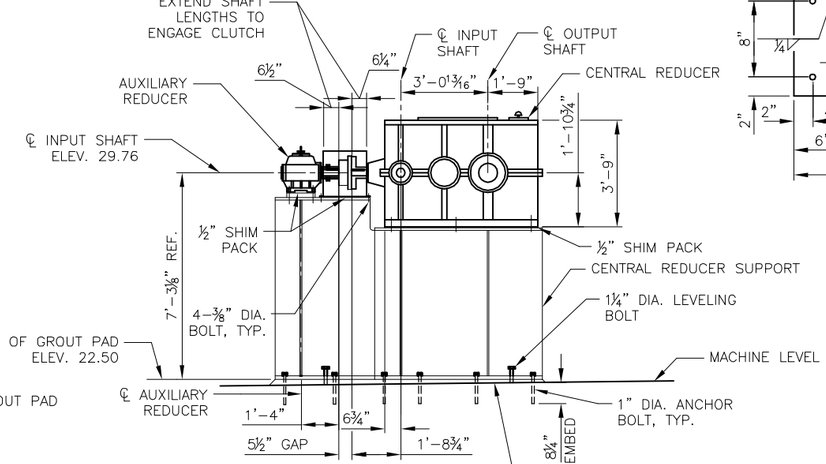

SECTION E BM03

(MAIN DRIVE COMPONENTS NOT SHOWN FOR CLARITY)

NOTES:

ANCHOR BOLTS TO BE HILTI HAS/HVA ANCHORS OR EQUIVALENT.

SUPPORT LEVELING BOLT QUANTITY AND SPACING AS REQUIRED.

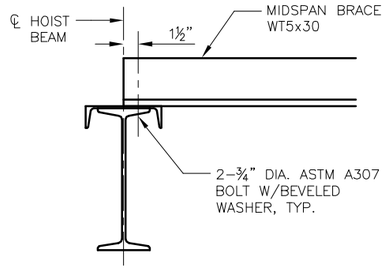

HOIST BEAM MIDSPAN BRACE ATTCHMENT

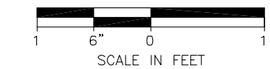

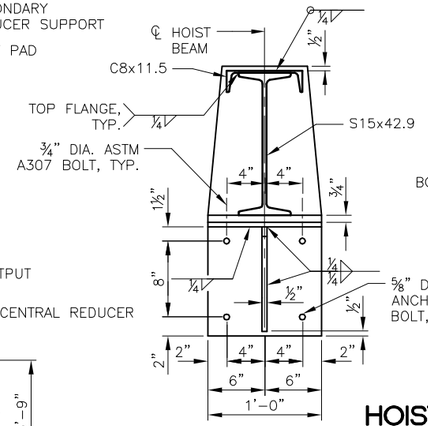

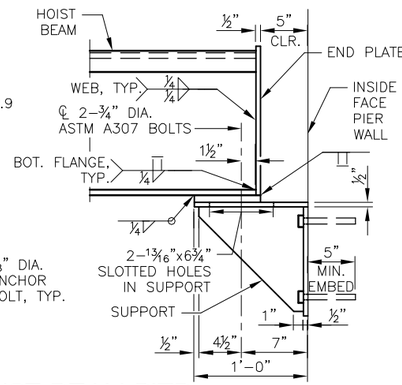

HOIST BEAM PIER WALL ATTACHMENT

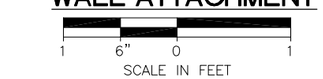

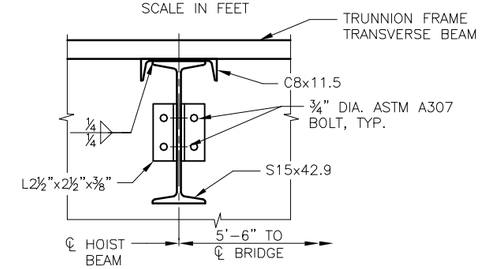

HOIST BEAM TRUNNION FRAME ATTACHMENT

FIELD BOOK:					
SURVEYED:					
SURVEY BASE MAP:					
DESIGN ENTERED: D. RINEHART	10/2009				
DESIGNED M. GREEN	10/2009				
CHECKED: D. APPELBAUM	12/2009				
SUPERVISOR: M. GREEN	01/2010	NUM.	REVISION	BY	DATE

MARK WILLIAM GREEN — STATE OF WASHINGTON — 20444 — REGISTERED PROFESSIONAL ENGINEER

HNTB

FED. AID No.

PROJECT No. 300197

SURVEY No. 32-24-4-22

MAINTENANCE DIVISION No. 3

KING COUNTY DEPT. OF TRANSPORTATION
HAROLD TANIGUCHI, DIRECTOR

SOUTH PARK BRIDGE #3179 REPLACEMENT

OPERATING MACHINERY SECTIONS – 2

King County

BM05

SHEET 597 OF 667 SHEETS

316-63 (___)

PINION DATA	
NO. OF TEETH 20° FULL DEPTH INVOLUTE	18
CIRCULAR PITCH	6"
PITCH DIAMETER	34.378"
ADDENDUM	1.910"
DEDENDUM	2.387"

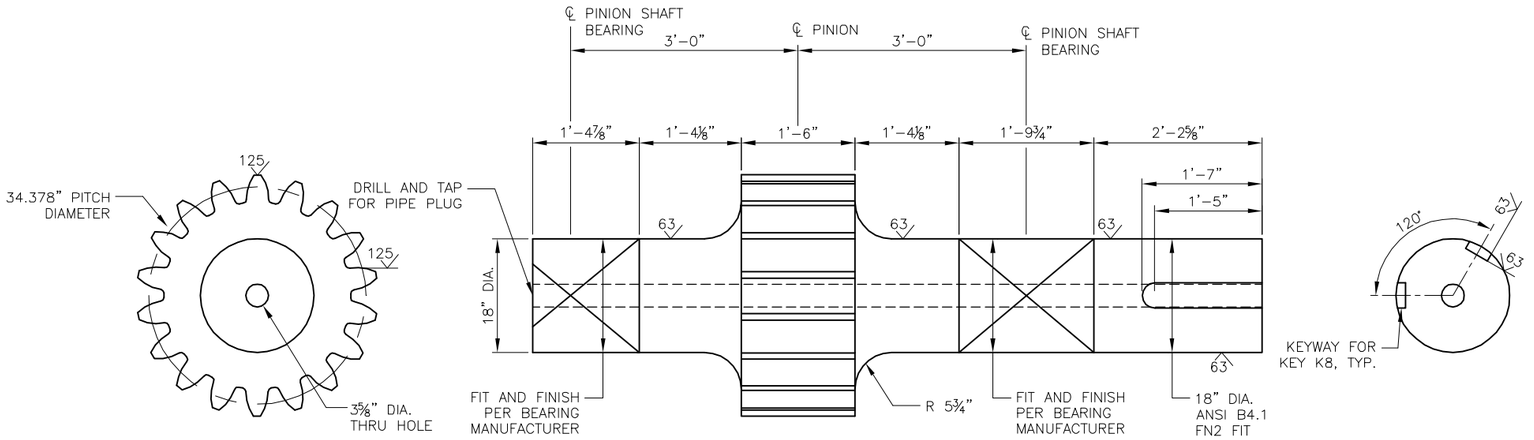

PINION SHAFT (P1)

1 0 1 2

SCALE IN FEET

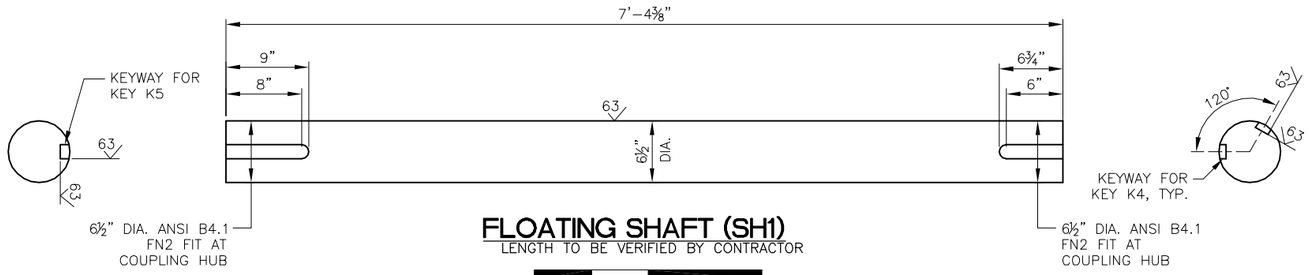

FLOATING SHAFT (SH1)

LENGTH TO BE VERIFIED BY CONTRACTOR

1 6" 0 1

SCALE IN FEET

MACHINERY KEY SCHEDULE						
KEY	SHAFT	COUPLING/ COMPONENT	QTY. PER CONNECTION	SIZE	MATERIAL	TOTAL QTY.
K1	M1	CP1	1	⅝"x⅝"x4"	ASTM A668 CLASS D	4
K2	R1 MAIN INPUT	CP1	1	⅝"x⅝"x6"	ASTM A668 CLASS D	4
K3	R1 OUTPUT	CP2 RIGID	2	1½"x1½"x7"	ASTM A668 CLASS D	4
K4	SH1	CP2 FLEX	2	1½"x1½"x6"	ASTM A668 CLASS D	8
K5	SH1	CP3 FLEX	1	2"x2"x8"	ASTM A668 CLASS D	4
K6	R2 INPUT	CP3 RIGID	2	2"x2"x8"	ASTM A668 CLASS D	8
K7	R2 OUTPUT	CP4	2	4"x3"x1'–5"	ASTM A668 CLASS G	8
K8	P1	CP4	2	4"x3"x1'–5"	ASTM A668 CLASS G	8
K9	M2	CP5	1	¾"x¾"x5⅝"	ASTM A668 CLASS D	2
K10	R3 INPUT	CP5	1	½"x½"x3½"	ASTM A668 CLASS D	2
K11	R3 OUTPUT	CL1	1	⅝"x⅝"x7"	ASTM A668 CLASS D	2
K12	R1 AUX. INPUT	CL1	1	⅝"x⅝"x7"	ASTM A668 CLASS D	2
K13	SH2	SP1	1	3"x2"x1'–0"	ASTM A668 CLASS K	4

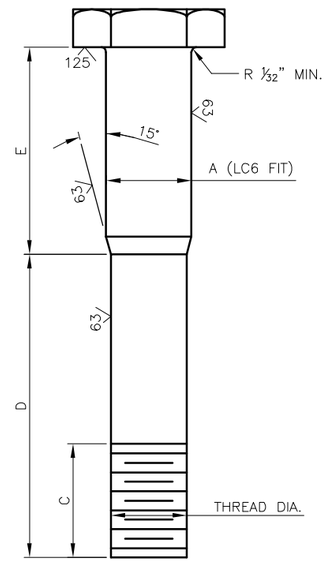

TURNED BOLT DETAIL

DIMENSION A SHALL BE AS SPECIFIED IN THE PLANS AND SHALL BE 1/16" LARGER THAN THREAD DIA.

DIMENSION C, D, & E TO BE DETERMINED BY CONTRACTOR.

NOTES:

ALL KEYS FOR MOTOR AND REDUCER SHAFTS SHALL AGREE WITH SELECTED EQUIPMENT.

FOR CONECTIONS REQUIRING 1 KEY, THE SIDE FIT BETWEEN KEY AND KEYWAY SHALL CONFORM TO ANSI B4.1 FN2 FIT. THE TOP AND BOTTOM FIT SHALL CONFORM TO ANSI B4.1 LC4 FIT.

FOR CONNECTIONS REQUIRING 2 KEYS, KEY AND KEYWAY FITS SHALL CONFORM TO ANSI B17.1 CLASS 2 FIT.

SCRIBE PITCH CIRCLE IN BOTH FACES OF PINION.

PINION SHAFT SHALL CONFORM TO ASTM A668 CLASS N.

FIELD BOOK:				
SURVEYED:				
SURVEY BASE MAP:				
DESIGN ENTERED:	D. RINEHART	10/2009		
DESIGNED	D. APPELBAUM	10/2009		
CHECKED:	M.GREEN	12/2009		
SUPERVISOR:	M. GREEN	01/2010		
NUM.	REVISION		BY	DATE

MARK WILLIAM GREEN — STATE OF WASHINGTON — 20061 — REGISTERED PROFESSIONAL ENGINEER

HNTB

FED. AID No.

PROJECT No. 300197

SURVEY No. 32-24-4-22

MAINTENANCE DIVISION No. 3

KING COUNTY DEPT. OF TRANSPORTATION

HAROLD TANIGUCHI, DIRECTOR

SOUTH PARK BRIDGE #3179 REPLACEMENT

OPERATING MACHINERY DETAILS

King County

BM06

SHEET 598 OF 667 SHEETS

316-63 (___)

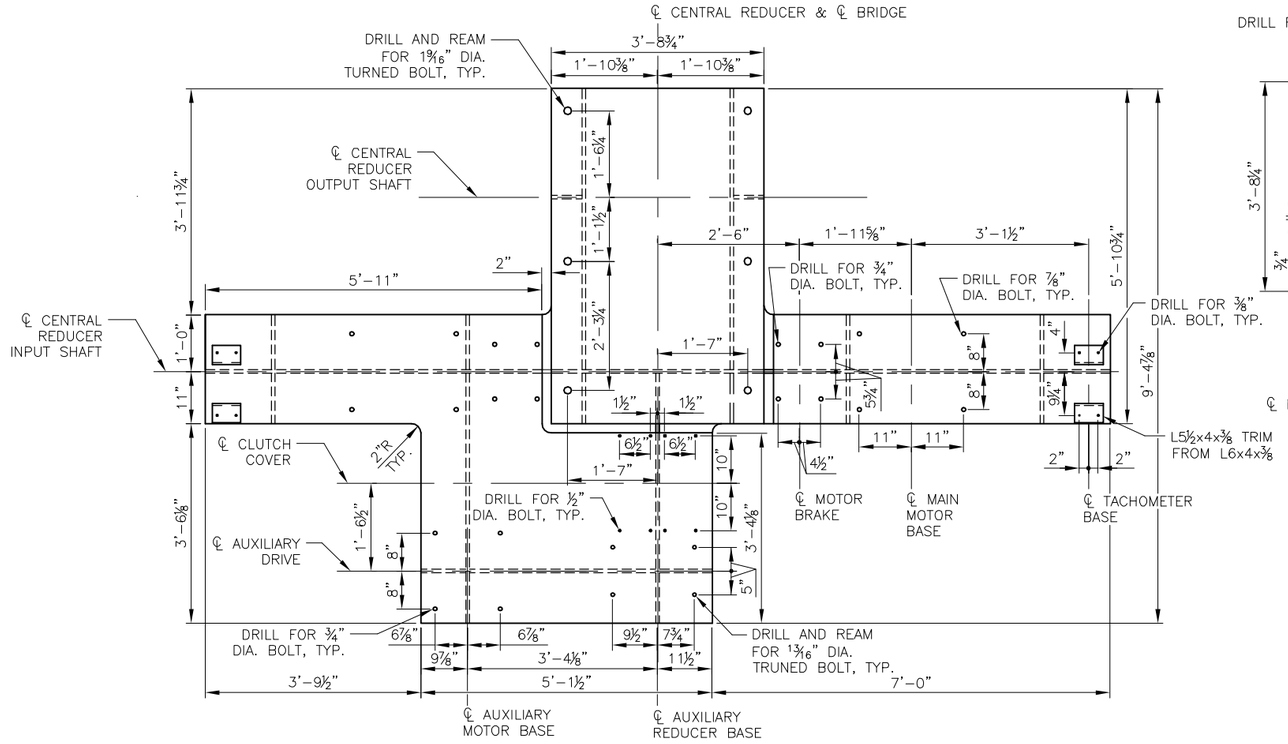

CENTER MACHINERY SUPPORT-PLAN

2 REQUIRED

SCALE IN FEET

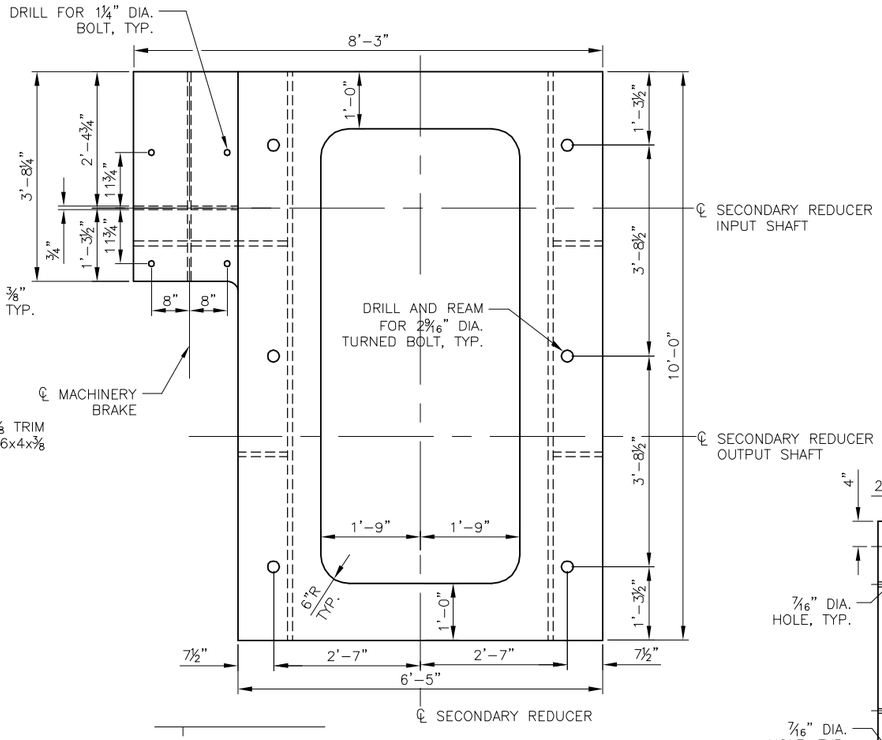

SECONDARY REDUCER SUPPORT-PLAN

2 REQUIRED AS SHOWN
2 REQUIRED OPPOSITE SIDE

SCALE IN FEET

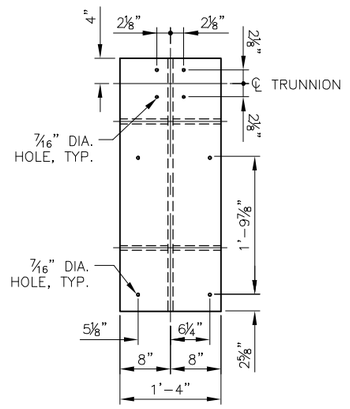

LIMIT SWITCH SUPPORT-PLAN

SCALE IN FEET

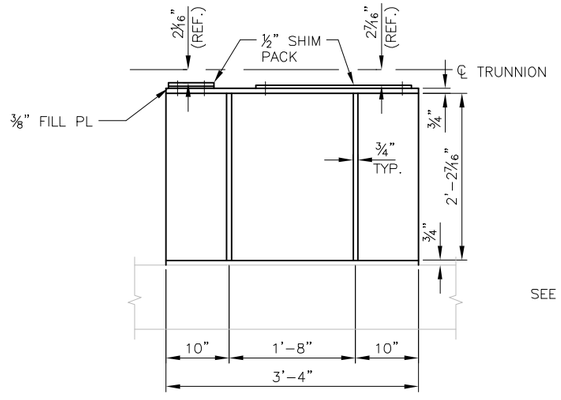

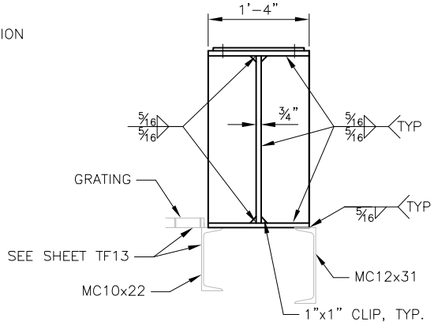

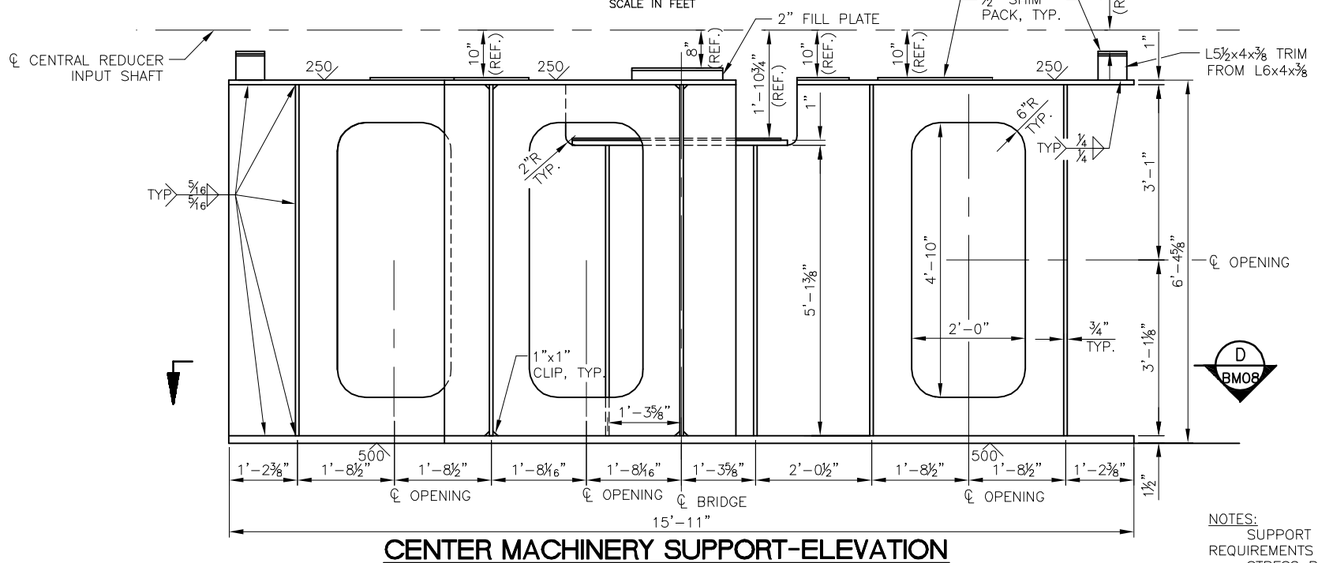

CENTER MACHINERY SUPPORT-ELEVATION

SCALE IN FEET

NOTES:
SUPPORT MATERIAL SHALL CONFORM TO THE REQUIREMENTS OF ASTM A709 GRADE 50.
STRESS RELIEVE AFTER WELDING PRIOR TO MACHINING.

LIMIT SWITCH SUPPORT-ELEVATION

2 REQUIRED

SCALE IN FEET

CALL 2 WORKING DAYS BEFORE YOU DIG
1-800-424-5555
(UNDERGROUND UTILITY LOCATIONS ARE APPROX.)

FIELD BOOK:						FED. AID No.		KING COUNTY DEPT. OF TRANSPORTATION HAROLD TANIGUCHI, DIRECTOR **SOUTH PARK BRIDGE #3179 REPLACEMENT** OPERATING MACHINERY SUPPORTS – 1	BM07
SURVEYED:						PROJECT No. 300197			SHEET 599 OF 667 SHEETS
SURVEY BASE MAP:						SURVEY No. 32-24-4-22			316-63 (___)
DESIGN ENTERED: D. RINEHART	10/2009					MAINTENANCE DIVISION No. 3			
DESIGNED M. GREEN	10/2009								
CHECKED: D. APPELBAUM	12/2009								
SUPERVISOR: M. GREEN	01/2010	NUM.	REVISION	BY	DATE				

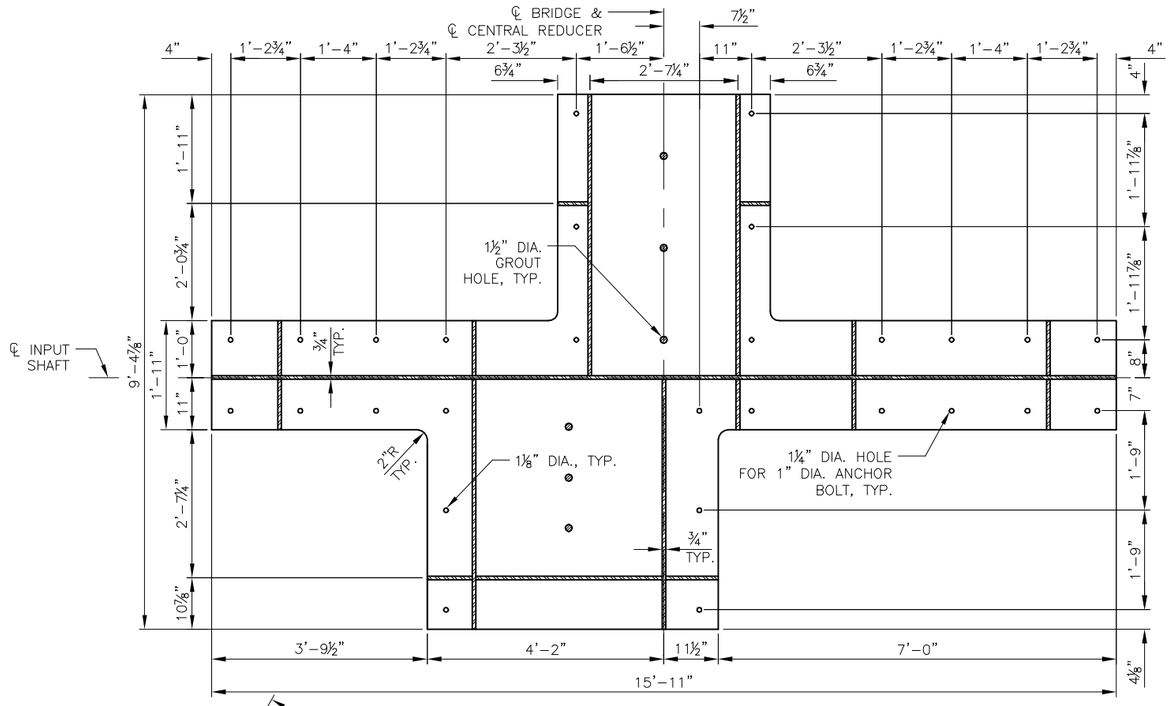

SECTION D BM07

SCALE IN FEET

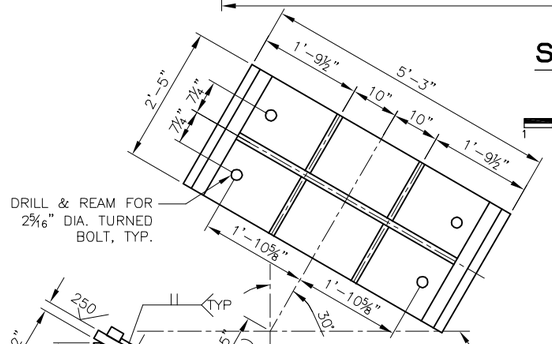

PINION BEARING SUPPORT

8 REQUIRED

SCALE IN FEET

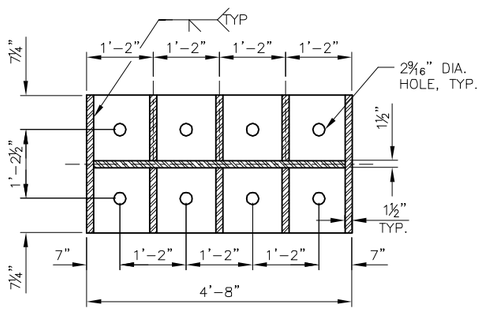

SECTION B

SCALE IN FEET

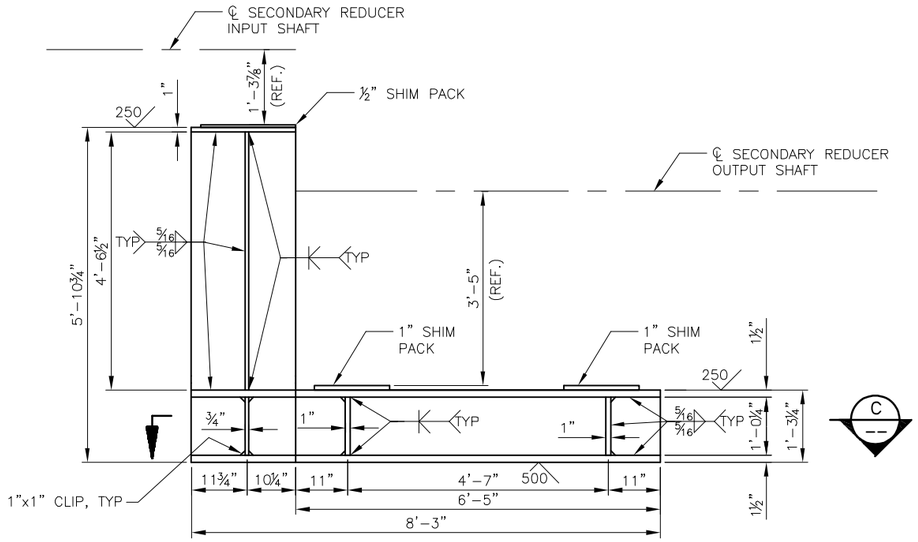

SECONDARY REDUCER SUPPORT-ELEVATION

SCALE IN FEET

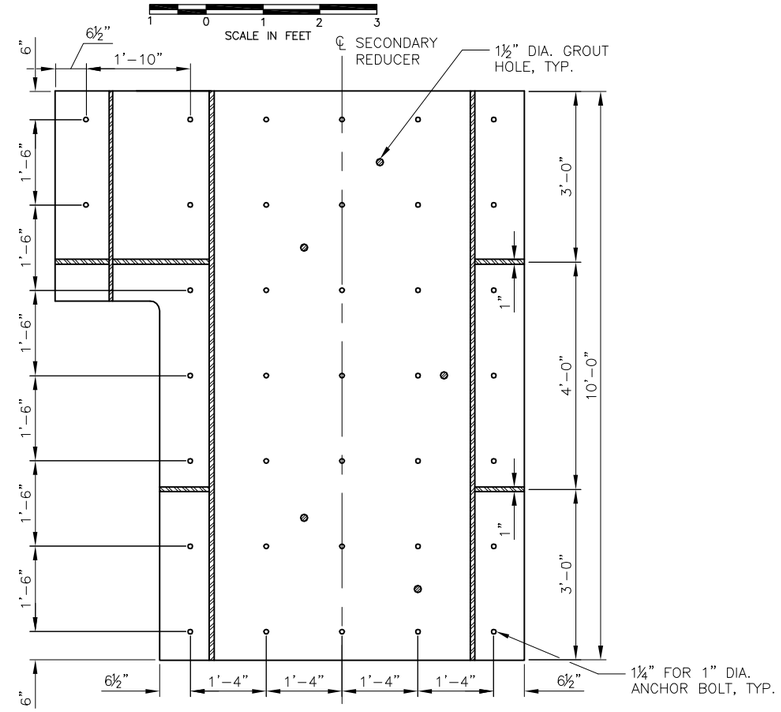

SECTION C

SCALE IN FEET

NOTES:

SUPPORT MATERIAL SHALL CONFORM TO THE REQUIREMENTS OF ASTM A709 GRADE 50.

STRESS RELIEVE AFTER WELDING PRIOR TO MACHINING.

CALL 2 WORKING DAYS BEFORE YOU DIG 1-800-424-5555 (UNDERGROUND UTILITY LOCATIONS ARE APPROX.)

FIELD BOOK:					
SURVEYED:					
SURVEY BASE MAP:					
DESIGN ENTERED:	D. RINEHART	10/2009			
DESIGNED	M. GREEN	10/2009			
CHECKED:	D. APPELBAUM	12/2009			
SUPERVISOR:	M. GREEN	01/2010	NUM.	REVISION	BY / DATE

MARK WILLIAM GREEN, STATE OF WASHINGTON, 43654, REGISTERED PROFESSIONAL ENGINEER

HNTB

FED. AID No.

PROJECT No. 300197

SURVEY No. 32-24-4-22

MAINTENANCE DIVISION No. 3

KING COUNTY DEPT. OF TRANSPORTATION

HAROLD TANIGUCHI, DIRECTOR

SOUTH PARK BRIDGE #3179 REPLACEMENT

OPERATING MACHINERY SUPPORTS – 2

King County

BM08

SHEET 600 OF 667 SHEETS

316-63 (___)

RACK DATA 20° INVOLUTE FULL DEPTH	
NUMBER TEETH PER SEGMENT	14
TOTAL NUMBER OF TEETH	42
CIRCULAR PITCH	6"
PITCH DIAMETER	336"
ADDENDUM	1.910"
DEDENDUM	2.387"

NOTES:

RACK SEGMENTS SHALL CONFORM TO ASTM A668 CLASS M. HARDNESS OF RACK SHALL BE 50± 10 BHN LOWER THAN PINION.

RACK SUPPORT WELDMENT SHALL CONFORM TO ASTM A709 GRADE 50.

WELDMENT TO BE STRESS RELIEVED AFTER WELDING AND PRIOR TO MACHINING.

TURNED BOLTS SHALL HAVE AN ANSI B4.1 LC6 FIT WITH HOLES IN MATING PARTS.

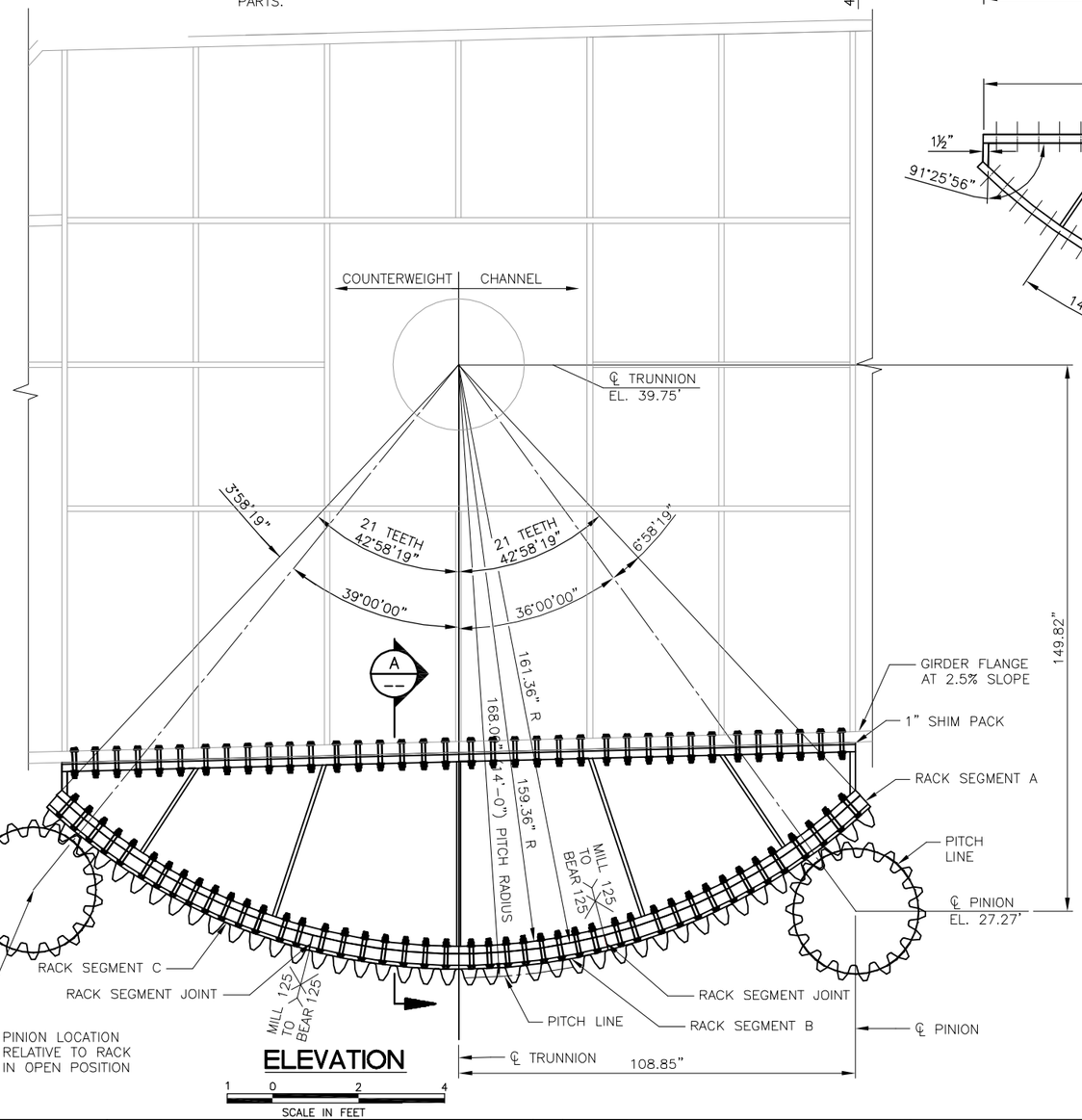

ELEVATION

SCALE IN FEET 1 0 2 4

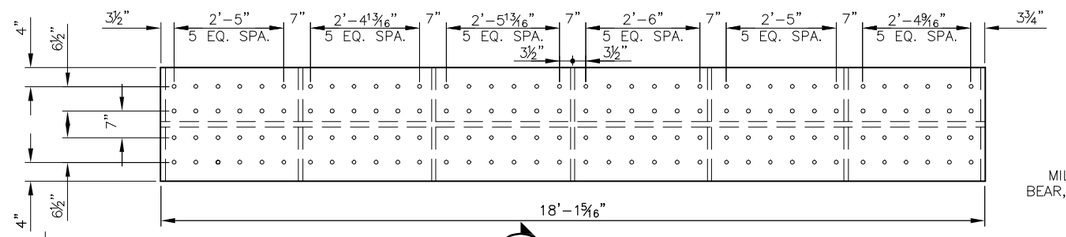

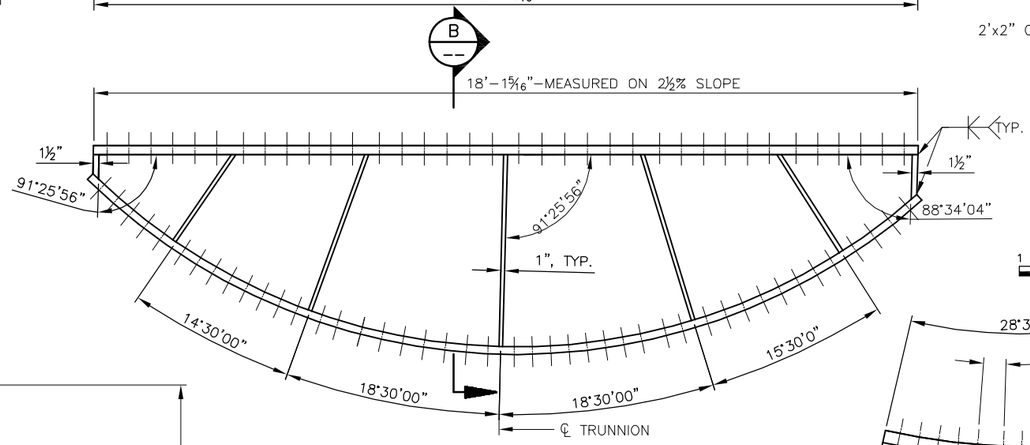

RACK SUPPORT

SCALE IN FEET 1 0 2 4

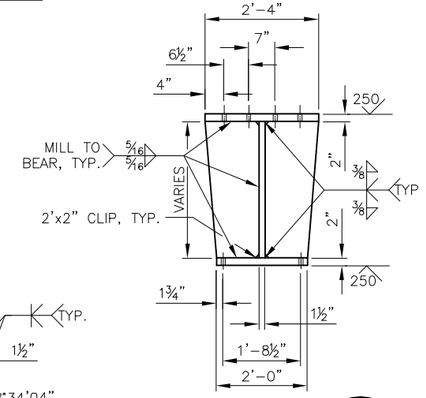

SECTION B

SCALE IN FEET 1 0 2 4

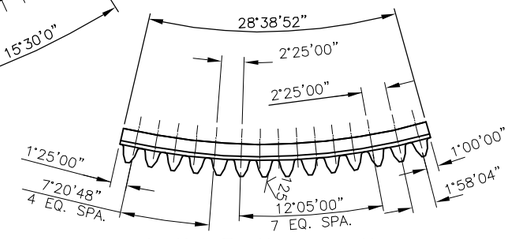

RACK SEGMENT C

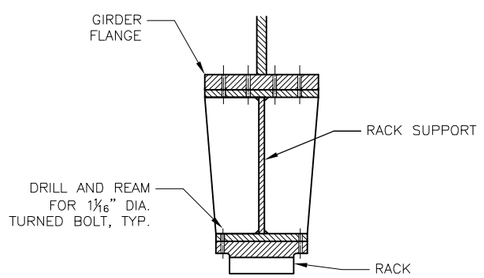

SECTION A

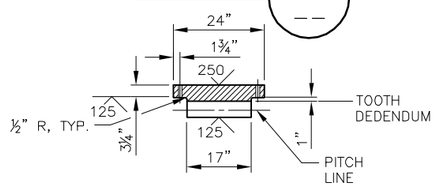

TYPICAL SECTION THROUGH RACK

SCALE IN FEET 1 0 2 4

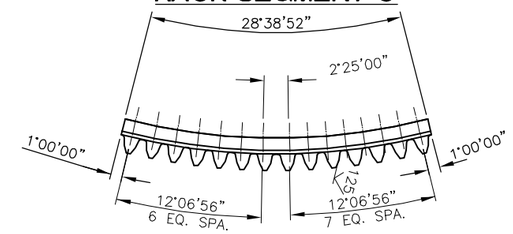

RACK SEGMENT B

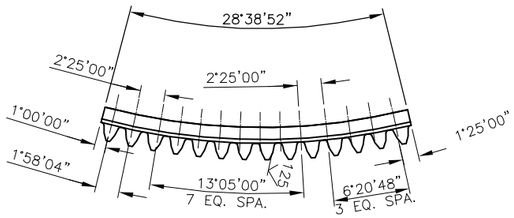

RACK SEGMENT A

SCALE IN FEET 1 0 2 4

FIELD BOOK:					
SURVEYED:					
SURVEY BASE MAP:					
DESIGN ENTERED:	D. RINEHART	8/2009			
DESIGNED	D. APPELBAUM	8/2009			
CHECKED:	M. GREEN	12/2009			
SUPERVISOR:	M. GREEN	01/2010	NUM.	REVISION	BY / DATE

MARK WILLIAM GREEN — STATE OF WASHINGTON — 36004 — REGISTERED PROFESSIONAL ENGINEER

HNTB

FED. AID No.

PROJECT No. 300197

SURVEY No. 32-24-4-22

MAINTENANCE DIVISION No. 3

KING COUNTY DEPT. OF TRANSPORTATION
HAROLD TANIGUCHI, DIRECTOR

SOUTH PARK BRIDGE #3179 REPLACEMENT

RACK ASSEMBLY AND DETAILS

King County

BM09

SHEET 601 OF 667 SHEETS

316-63 (___)

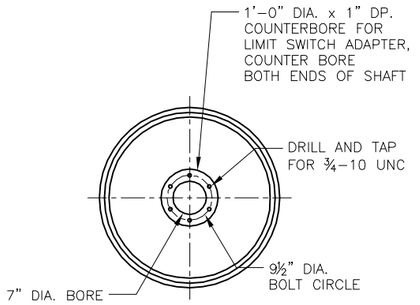

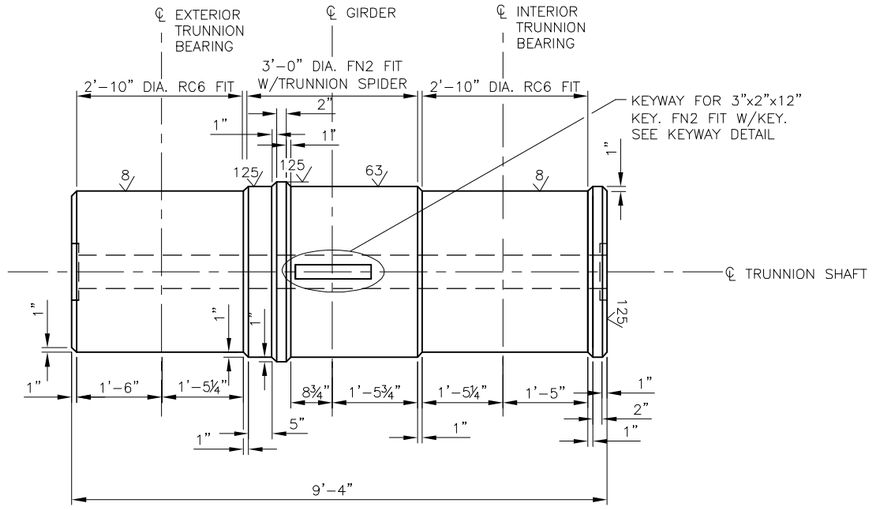

TRUNNION SHAFT

MATERIAL: ASTM A668 CLASS K

0 1 2 3
SCALE IN FEET

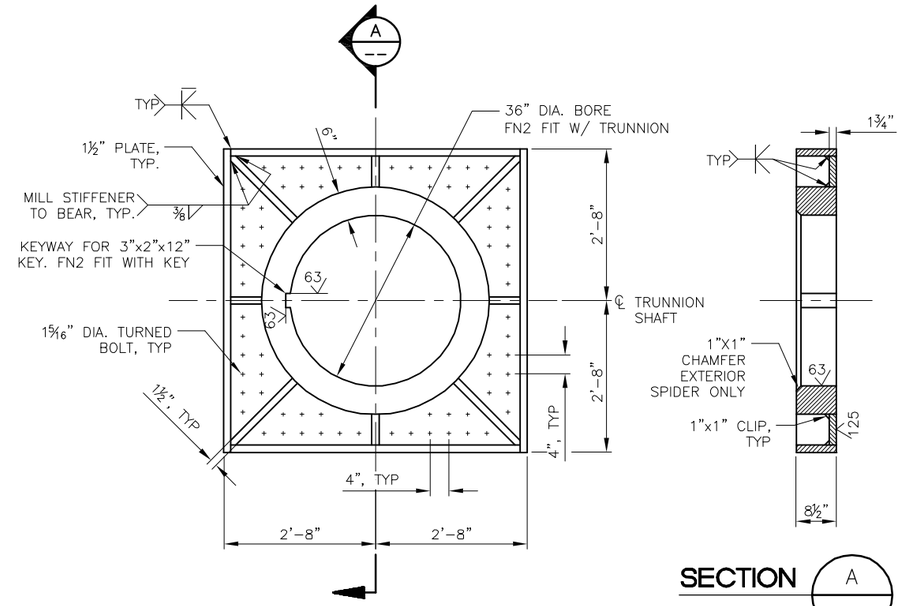

SECTION A – A

TRUNNION SPIDER

0 1 2 3
SCALE IN FEET

NOTES:

STRESS RELIEVE AFTER WELDING PRIOR TO MACHINING

TURNED BOLTS SHALL HAVE AN ANSI LC6 FIT W/MATING PARTS.

TRUNNION SPIDER HUB SHALL CONFORM TO ASTM A668 CLASS K SUPPLEMENT S4. REMAINING TRUNNION SPIDER MATERIAL SHALL CONFORM TO ASTM A709 GRADE 50.

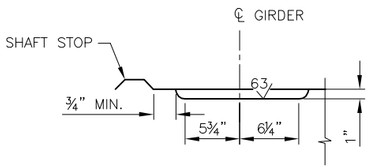

KEYWAY DETAIL

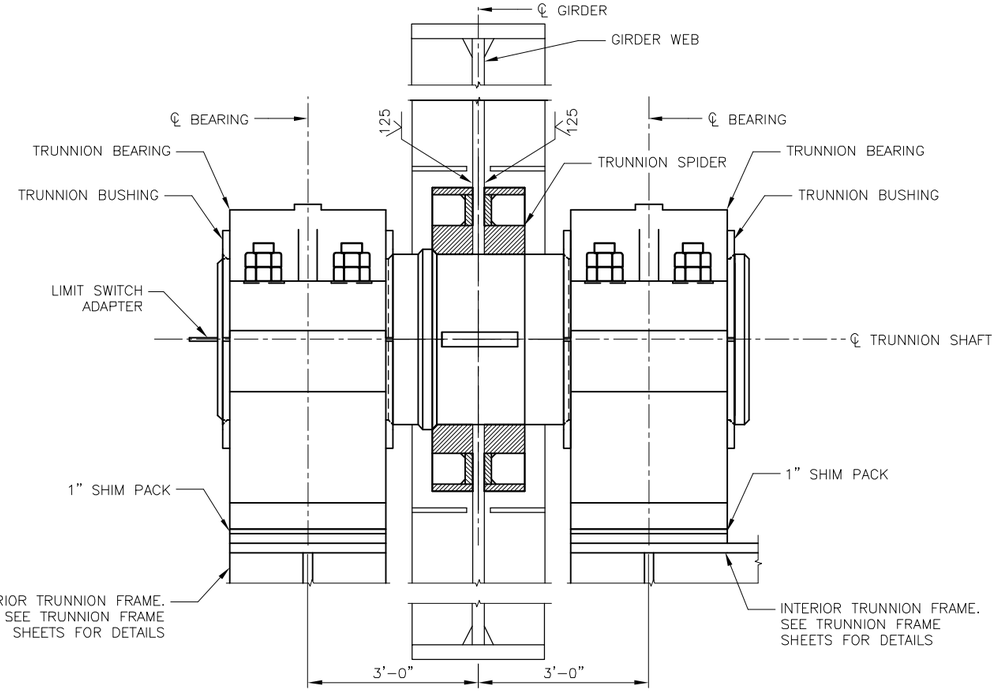

TRUNNION SHAFT ASSEMBLY

TRUNNION SPIDER SHOWN IN SECTION FOR CLARITY

0 1 2 3
SCALE IN FEET

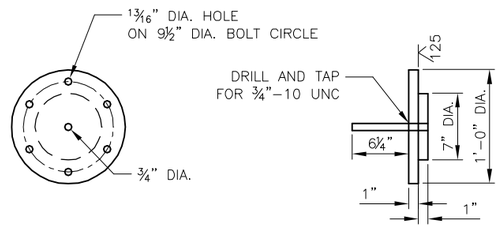

LIMIT SWITCH ADAPTER SHAFT

MATERIAL: ASTM A709 GRADE 36

2-REQUIRED

0 .5 1 2
SCALE IN FEET

FIELD BOOK:						FED. AID No.	
SURVEYED:							
SURVEY BASE MAP:						PROJECT No. 300197	
DESIGN ENTERED: D. RINEHART	10/2009					SURVEY No. 32–24–4–22	
DESIGNED M. GREEN	10/2009						
CHECKED: D. APPELBAUM	12/2009					MAINTENANCE DIVISION No. 3	
SUPERVISOR: M. GREEN	01/2010	NUM.	REVISION	BY	DATE		

KING COUNTY DEPT. OF TRANSPORTATION
HAROLD TANIGUCHI, DIRECTOR

SOUTH PARK BRIDGE #3179 REPLACEMENT

TRUNNION SHAFT ASSEMBLY AND DETAILS

King County

BM10

SHEET 602 OF 667 SHEETS

316-63 (___)

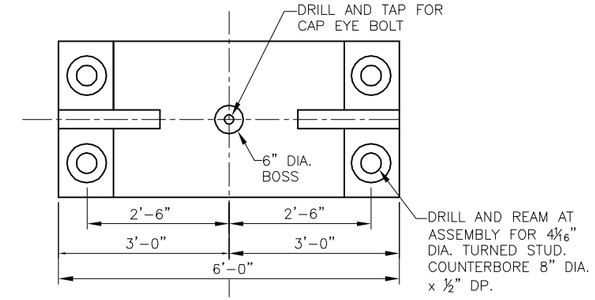

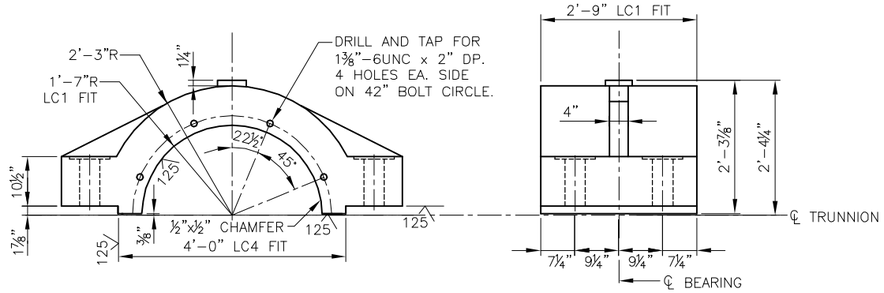

TRUNNION BEARING CAP

MATERIAL: ASTM B148 GRADE 80-50

SCALE IN FEET 0 1 2 3

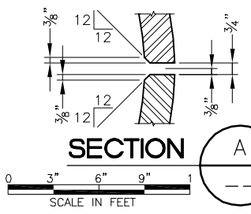

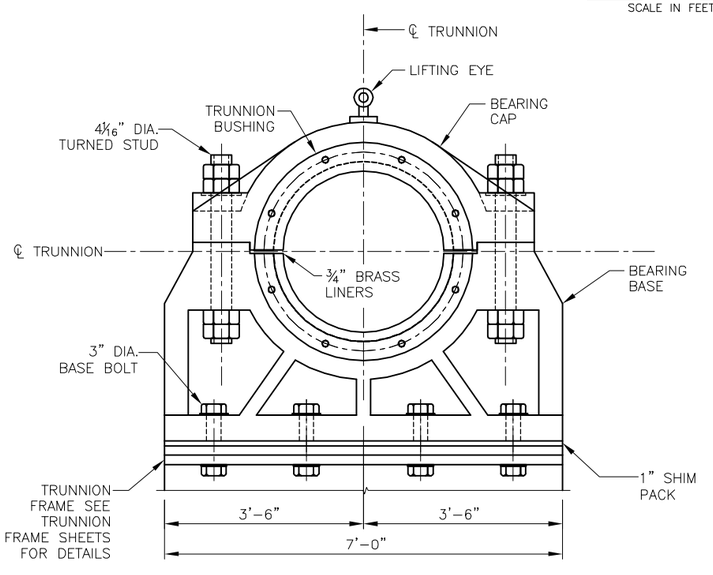

TRUNNION BEARING ASSEMBLY

SCALE IN FEET 0 1 2 3

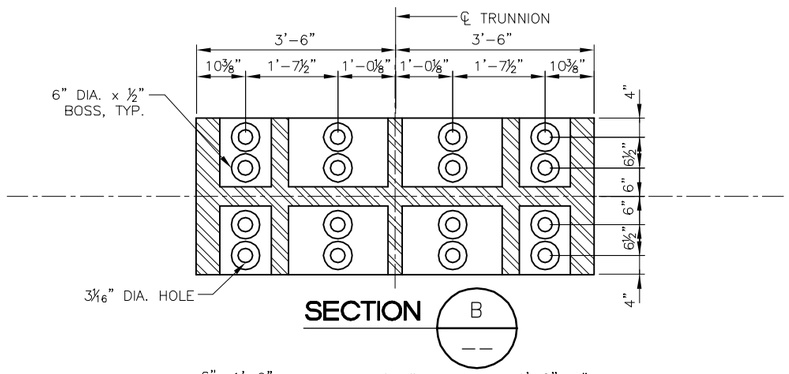

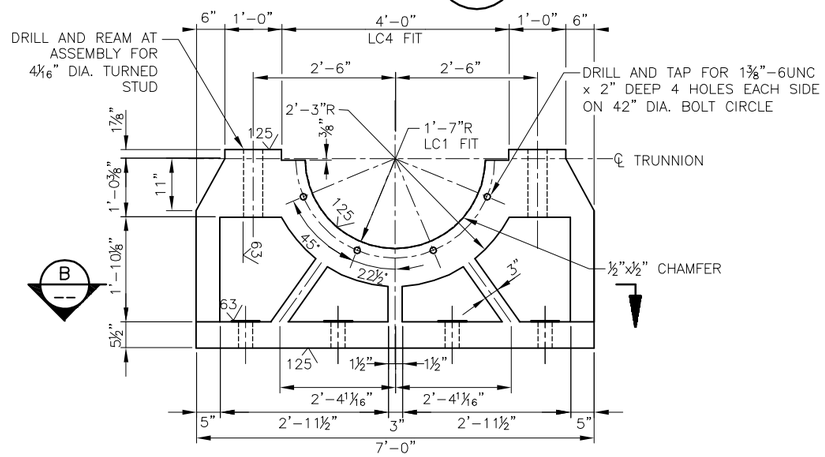

TRUNNION BEARING BASE

MATERIAL: ASTM A148 GRADE 80-50

SCALE IN FEET 0 1 2 3

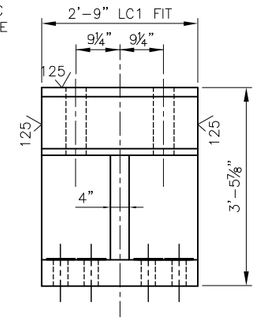

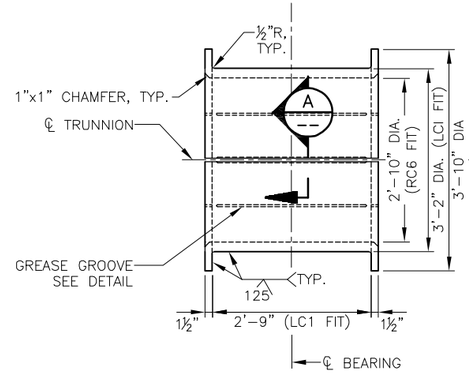

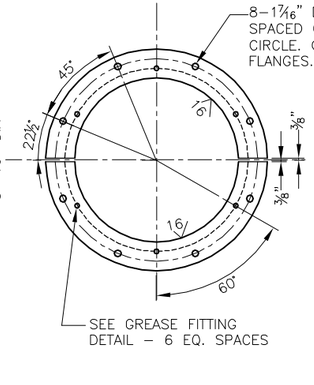

TRUNNION BUSHING

MATERIAL: ASTM B148 C95400

SCALE IN FEET 0 1 2 3

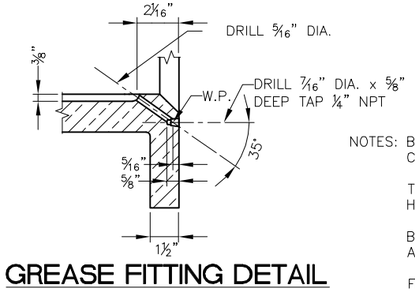

GREASE FITTING DETAIL

SCALE IN FEET 0 .25 .5 1

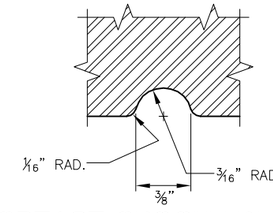

GREASE GROOVE DETAIL

(FOR TRUNNION BUSHING)

SCALE IN FEET 0 .25 .5 1

NOTES:

BEARING CAP STUDS SHALL CONFORM TO ASTM A668 CLASS D MATERIAL.

TURNED STUDS SHALL HAVE AN ANSI LC6 FIT WITH HOLES IN MATING PARTS.

BEARING BASE BOLTS SHALL CONFORM TO ASTM A668 CLASS L.

FINISH BORE WITH CAP AND BASE ASSEMBLED.

BOLTS TO ATTACH BUSHING TO BEARING SHALL CONFORM TO ASTM F468G.

NUM.	REVISION	BY	DATE

FIELD BOOK:
SURVEYED:
SURVEY BASE MAP:
DESIGN ENTERED: D. RINEHART 10/2009
DESIGNED M. GREEN 10/2009
CHECKED: D. APPELBAUM 12/2009
SUPERVISOR: M. GREEN 01/2010

MARK WILLIAM GREEN — STATE OF WASHINGTON — REGISTERED PROFESSIONAL ENGINEER

FED. AID No.
PROJECT No. 300197
SURVEY No. 32-24-4-22
MAINTENANCE DIVISION No. 3

KING COUNTY DEPT. OF TRANSPORTATION
HAROLD TANIGUCHI, DIRECTOR

SOUTH PARK BRIDGE #3179 REPLACEMENT

TRUNNION BEARING ASSEMBLY AND DETAILS

King County

BM11

SHEET 603 OF 667 SHEETS

316-63 (___)

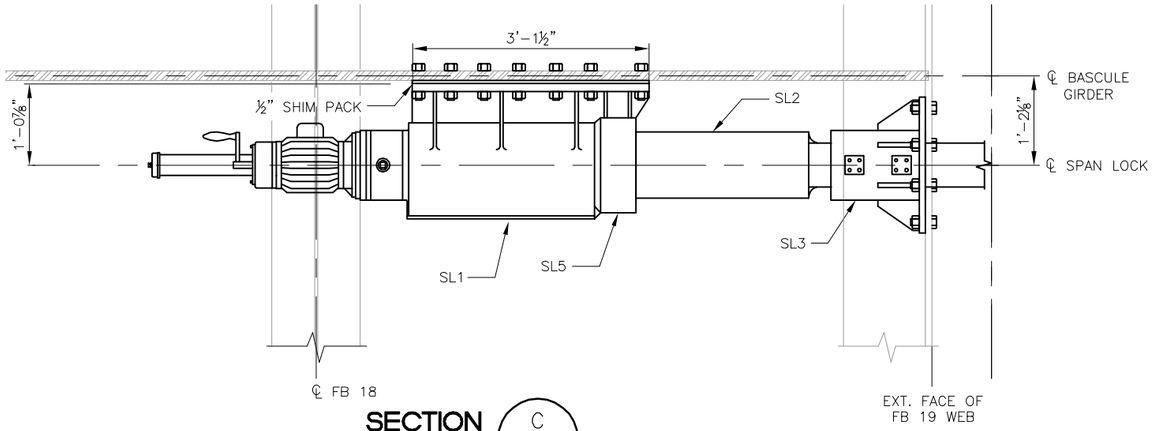

SECTION C
BOOT NOT SHOWN FOR CLARITY

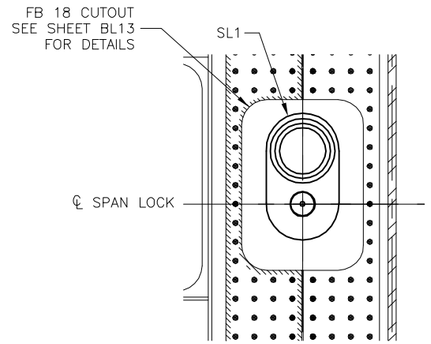

SECTION B

SPAN LOCK MACHINERY SCHEDULE				
ITEM NO.	ITEM	NO. REQ'D	DESIGN REQUIREMENTS	SUITABLE EQUIPMENT
SL1	SPAN LOCK ACTUATOR	2	ELECTRICALLY DRIVEN LINEAR SCREW ACTUATOR WITH 8800 LBS. OF THRUST AT 1½ IN/SEC. PROVIDE REMOVABLE HANDCRANK WITH MECHANICAL DISENGAGE AND ELECTRICAL INTERLOCK, STROKE LIMIT SWITCHES, ADJUSTABLE BRAKE, AND MOTOR STRIP HEATERS.	EARLE EG3 OPERATOR WITH SPECIAL HOUSING
SL2	LOCKBAR	2	7"x10" LOCKBAR	ASTM A668 CLASS K
SL3	LOCKBAR GUIDE	2	—	EARLE CUSHIONLOKS GUIDE ASSEMBLY
SL4	LOCKBAR RECEIVER	2	—	EARLE CUSHIONLOKS RECEIVER ASSEMBLY
SL5	REAR GUIDE	2	INTEGRAL REAR GUIDE	EARLE SPECIAL OPERATOR

NOTES:
DETAILS FLOORBEAM 18 NORTH ARE SHOWN ON SHEET BL13.
DETAILS OF FLOORBEAM 19 ARE SHOWN ON SHEET BL14.

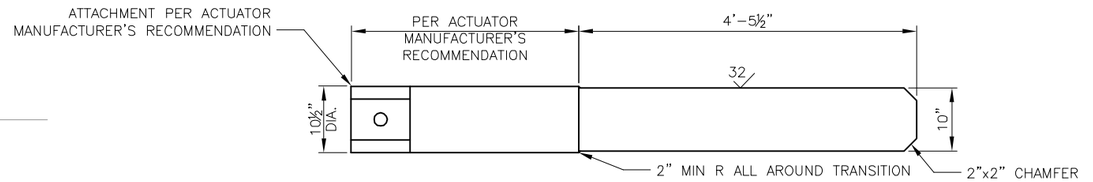

LOCK BAR

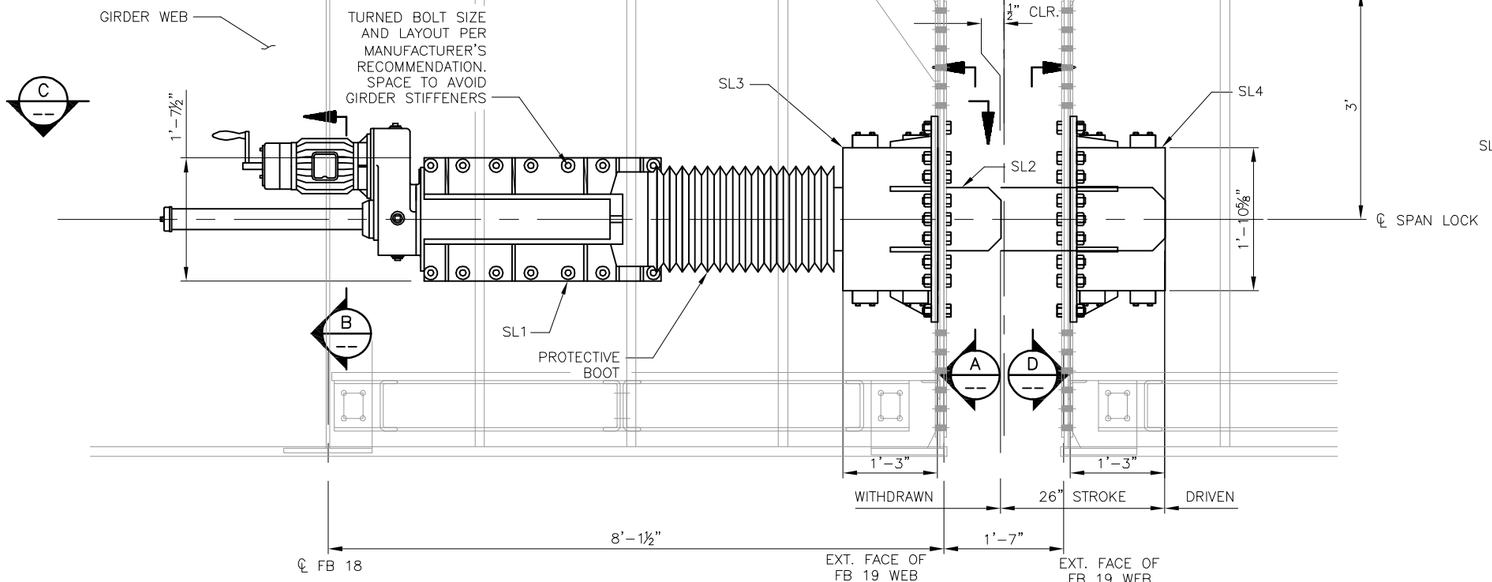

ELEVATION SPAN LOCK ASSEMBLY
EAST SPAN LOCK SHOWN
WEST SPAN LOCK OPPOSITE HAND

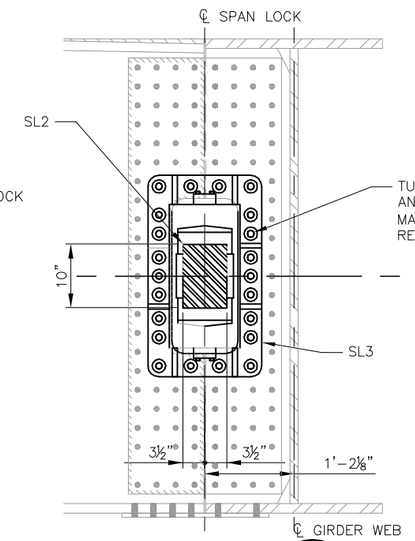

SECTION A

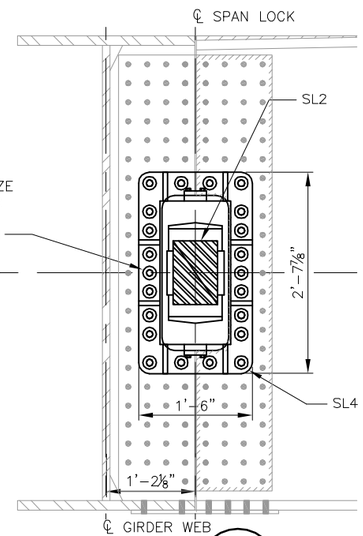

SECTION D

FIELD BOOK:						FED. AID No.		KING COUNTY DEPT. OF TRANSPORTATION HAROLD TANIGUCHI, DIRECTOR SOUTH PARK BRIDGE #3179 REPLACEMENT SPAN LOCK ASSEMBLY	BM12
SURVEYED:						PROJECT No. 300197			SHEET 604 OF 667 SHEETS
SURVEY BASE MAP:						SURVEY No. 32-24-4-22			316-63 (___)
DESIGN ENTERED:	D. RINEHART	10/2009				MAINTENANCE DIVISION No. 3			
DESIGNED	D. APPELBAUM	10/2009							
CHECKED:	M. GREEN	12/2009							
SUPERVISOR:	M. GREEN	01/2010	NUM.	REVISION	BY	DATE			

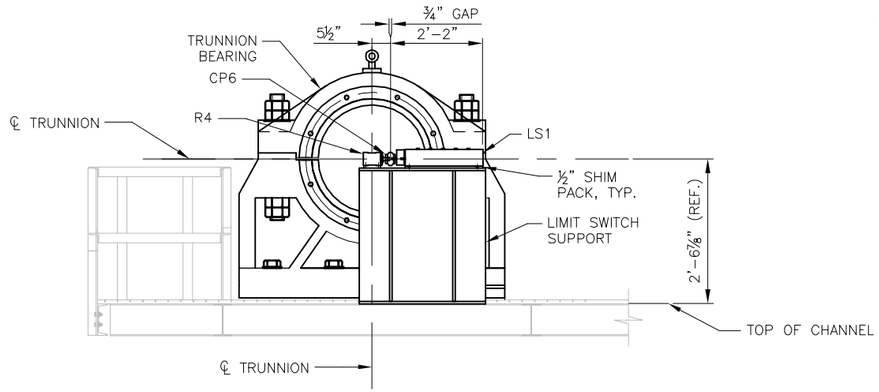

LIMIT SWITCH-ELEVATION

2 ASSEMBLIES REQUIRED

0 1 2 3

SCALE IN FEET

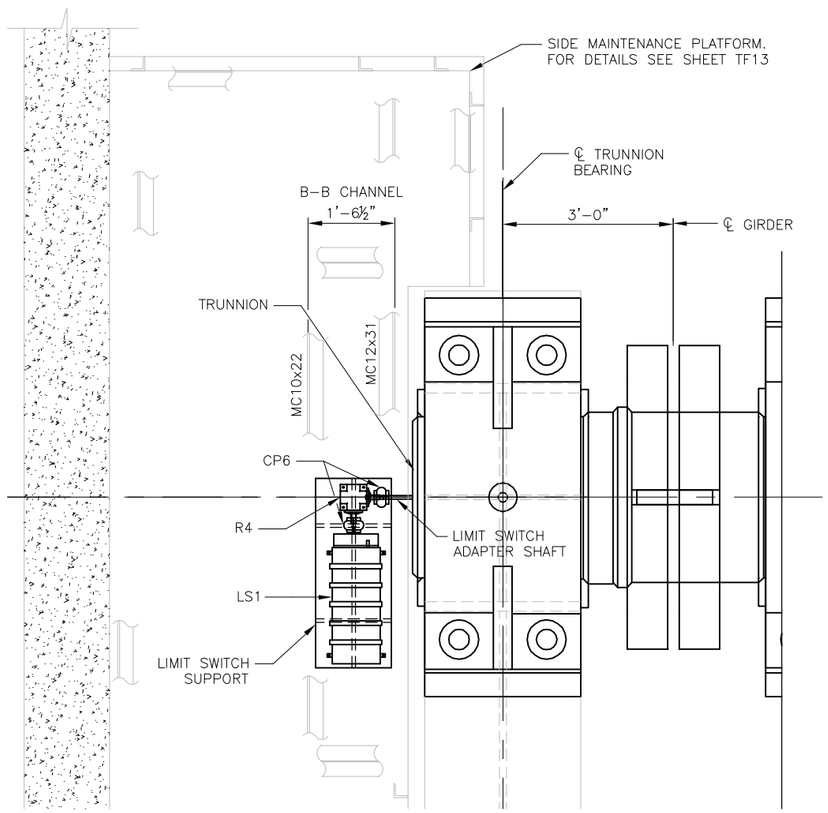

LIMIT SWITCH-PLAN

PIER 4 SHOWN

(PIER 3 ROTATED 180°)

0 1 2 3

SCALE IN FEET

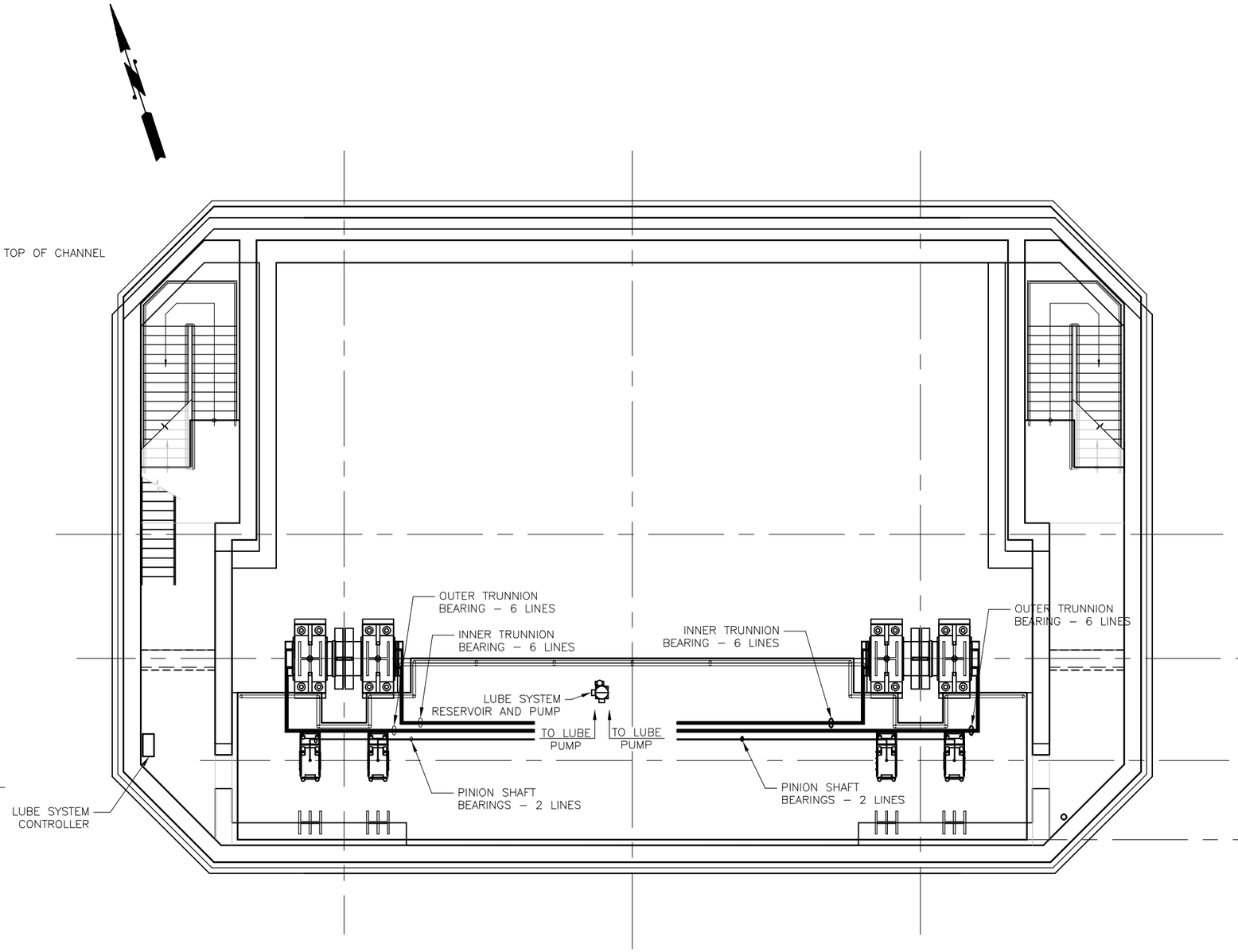

LUBRICATION DIAGRAM

PIER 4 SHOWN

(PIER 3 ROTATED 180°)

0 4 6 8

SCALE IN FEET

CALL 2 WORKING DAYS BEFORE YOU DIG 1-800-424-5555

(UNDERGROUND UTILITY LOCATIONS ARE APPROX.)

FIELD BOOK:					
SURVEYED:					
SURVEY BASE MAP:					
DESIGN ENTERED:	D. RINEHART	10/2009			
DESIGNED	M. GREEN	10/2009			
CHECKED:	D. APPELBAUM	12/2009			
SUPERVISOR:	M. GREEN	01/2010	NUM.	REVISION	BY / DATE

MARK WILLIAM GREEN — STATE OF WASHINGTON — 42664 — REGISTERED PROFESSIONAL ENGINEER

HNTB

FED. AID No.

PROJECT No. 300197

SURVEY No. 32-24-4-22

MAINTENANCE DIVISION No. 3

KING COUNTY DEPT. OF TRANSPORTATION

HAROLD TANIGUCHI, DIRECTOR

SOUTH PARK BRIDGE #3179 REPLACEMENT

SPAN CONTROL MACHINERY AND LUBRICATION SYSTEM

King County

BM13

SHEET 605 OF 667 SHEETS

316-63 (____)

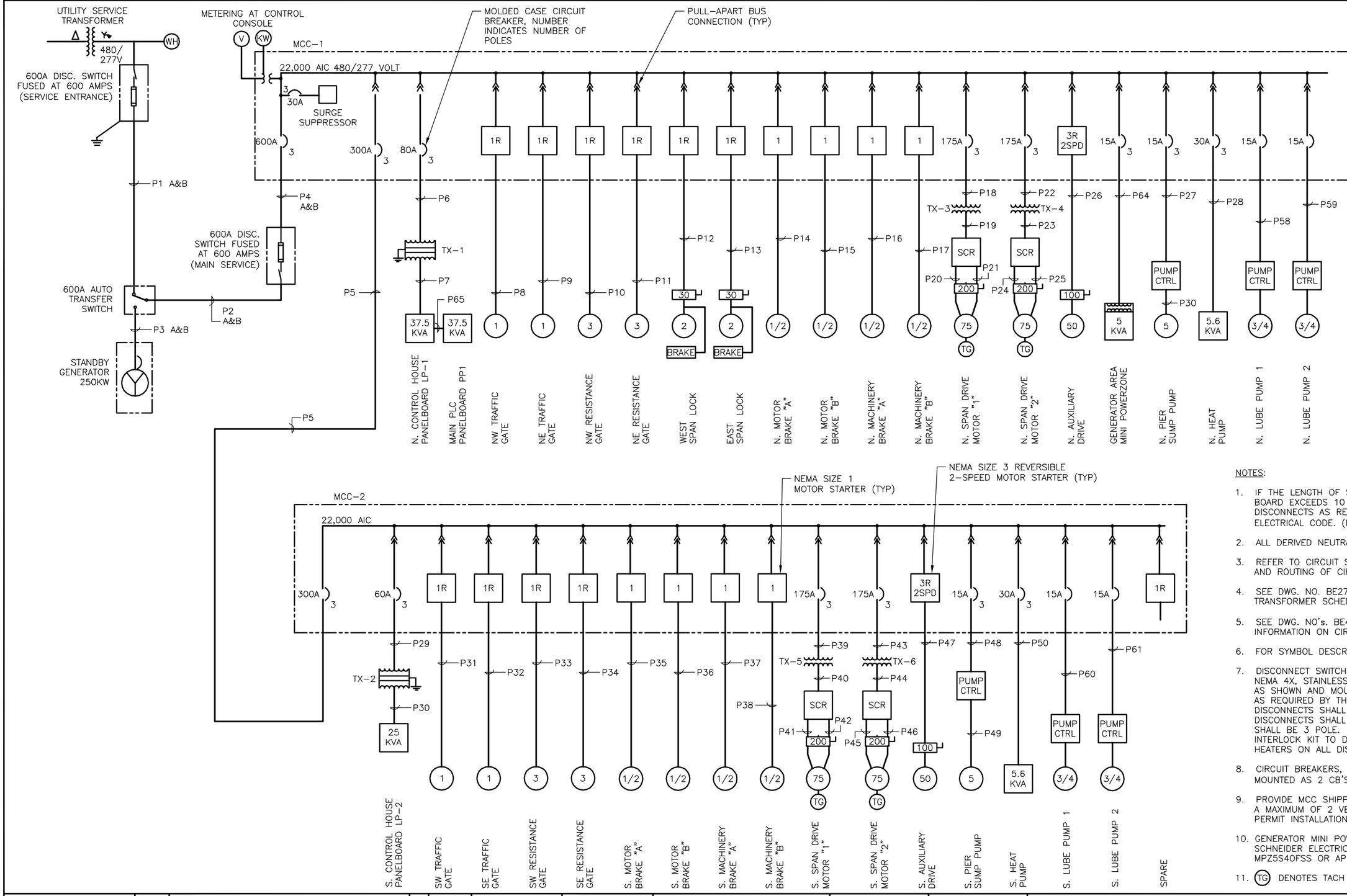

NOTES:

1. IF THE LENGTH OF SECONDARY TO THE PANEL–BOARD EXCEEDS 10 FEET, PROVIDE CIRCUIT DISCONNECTS AS REQUIRED BY THE NATIONAL ELECTRICAL CODE. (NEC)
2. ALL DERIVED NEUTRALS MUST BE GROUNDED.
3. REFER TO CIRCUIT SCHEDULES FOR WIRE SIZE AND ROUTING OF CIRCUIT INDICATED.
4. SEE DWG. NO. BE27 FOR PANELBOARD AND TRANSFORMER SCHEDULES.
5. SEE DWG. NO's. BE48 TO BE53 FOR FURTHER INFORMATION ON CIRCUIT DESIGNATIONS.
6. FOR SYMBOL DESCRIPTIONS SEE DWG. NO. BE31.
7. DISCONNECT SWITCHES SHALL BE NON–FUSIBLE, NEMA 4X, STAINLESS STEEL, 600 VOLT, RATED AS SHOWN AND MOUNTED NEAR EACH MOTOR AS REQUIRED BY THE NEC. MAIN DRIVE DISCONNECTS SHALL BE 4 POLE AND AUX. DRIVE DISCONNECTS SHALL BE 6 POLE. ALL OTHERS SHALL BE 3 POLE. PROVIDE ELECTRICAL INTERLOCK KIT TO DISCONNECT MOTOR SPACE HEATERS ON ALL DISCONNECT SWITCHES.
8. CIRCUIT BREAKERS, 100A OR LESS SHALL BE MOUNTED AS 2 CB'S PER SPACE FACTOR.
9. PROVIDE MCC SHIPPING SPLITS CONSISTING OF A MAXIMUM OF 2 VERTICAL SECTIONS EACH TO PERMIT INSTALLATION DURING CONSTRUCTION.
10. GENERATOR MINI POWERZONE SHALL BE SCHNEIDER ELECTRIC SQUARE–D CAT NO. MPZ5S4OFSS OR APPROVED EQUAL.
11. (TG) DENOTES TACH GENERATOR

FIELD BOOK:					
SURVEYED:					
SURVEY BASE MAP:					
DESIGN ENTERED:	F. HAYWOOD	9/2008			
DESIGNED	G. PETERS	9/2008			
CHECKED:	R. STEEL	11/2009			
SUPERVISOR:	G. PETERS	01/2010	NUM.	REVISION	BY / DATE

JOHN G. SCHAILEE STATE OF WASHINGTON 46884 REGISTERED PROFESSIONAL ENGINEER

HNTB

FED. AID No.

PROJECT No. 300197

SURVEY No. 32–24–4–22

MAINTENANCE DIVISION No. 3

KING COUNTY DEPT. OF TRANSPORTATION
HAROLD TANIGUCHI, DIRECTOR

SOUTH PARK BRIDGE #3179 REPLACEMENT

ONE LINE DIAGRAM

King County

BE01

SHEET 606 OF 667 SHEETS

316–63 (___)

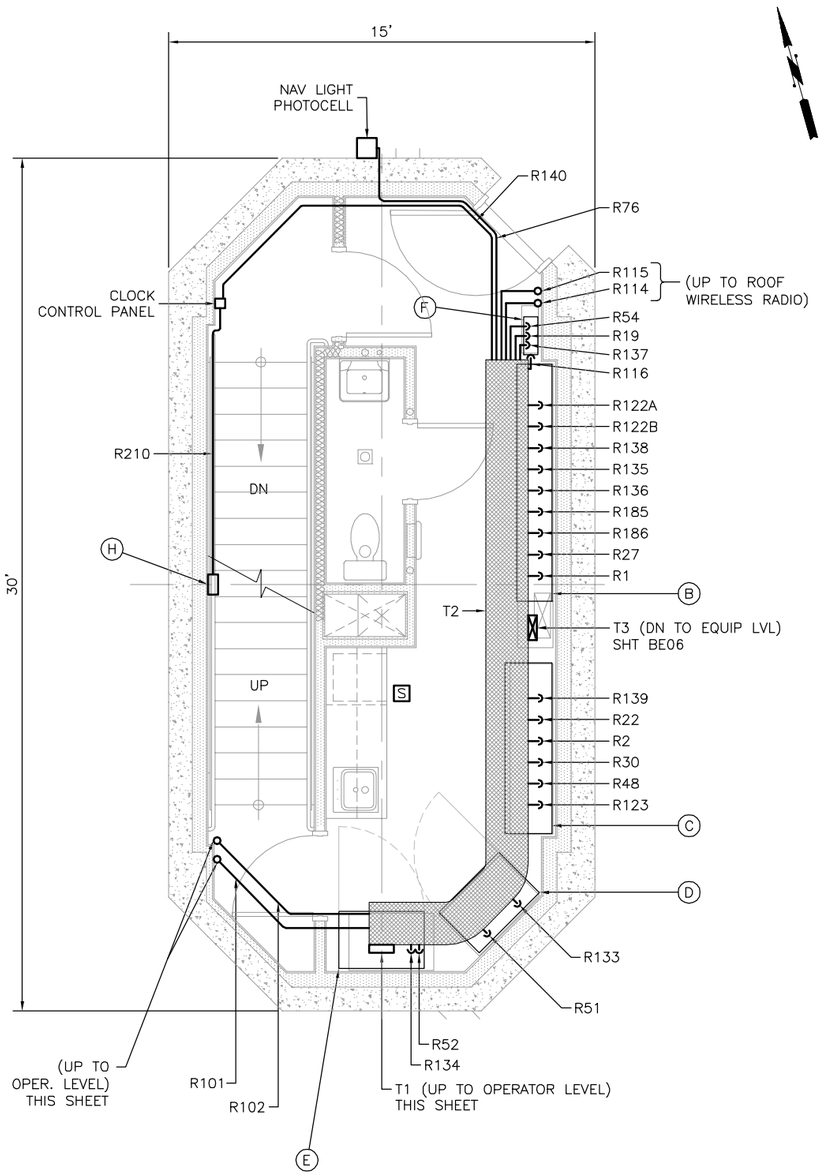

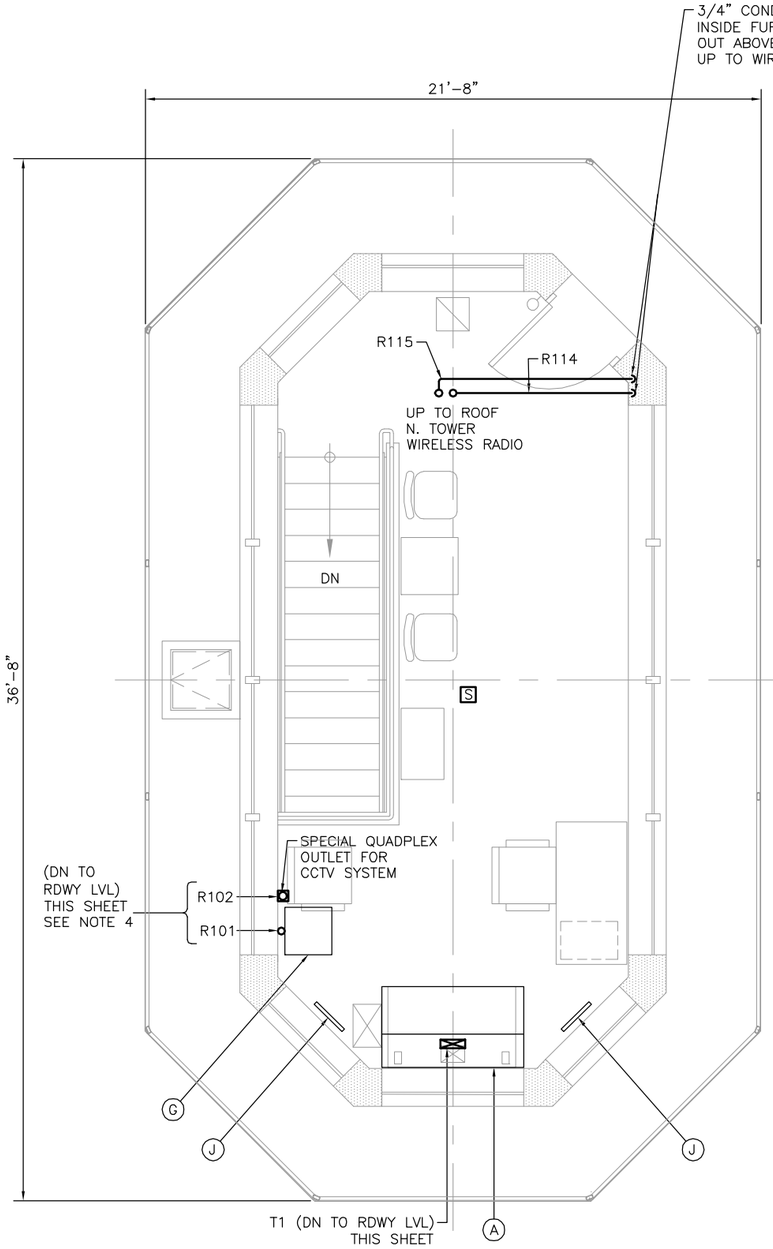

EQUIPMENT LEGEND

- (A) CONTROL DESK
- (B) MOTOR CONTROL CENTER MCC-1
- (C) MAIN PLC CABINET
- (D) N. DRIVE CONTROLLER 1
- (E) N. DRIVE CONTROLLER 2
- (F) PANEL BOARD LP-1
- (G) CCTV EQUIPMENT CABINET
- (H) N. TOWER CLOCK
- (J) CCTV MONITOR
- [S] DENOTE SMOKE DETECTOR

NOTES:

1. ROUTE CONDUITS ON OPERATOR'S LEVEL WITHIN FURRED WALLS WHERE POSSIBLE.
2. SEE SHEET BE31 FOR SYMBOL LEGEND.
3. ROUTE CABLE TRAY ON ROADWAY LEVEL TO AVOID STRUCTURAL SUPPORT BEAMS. LOWER TRAY DOWN TO PASS UNDER BEAMS, OTHERWISE LOCATE BOTTOM OF TRAY 8'-4" A.F.F.
4. STUB CONDUIT R101 TO END 4" A.F.F. TO PERMIT CCTV CABLE TO ENTER CCTV EQUIPMENT RACK.

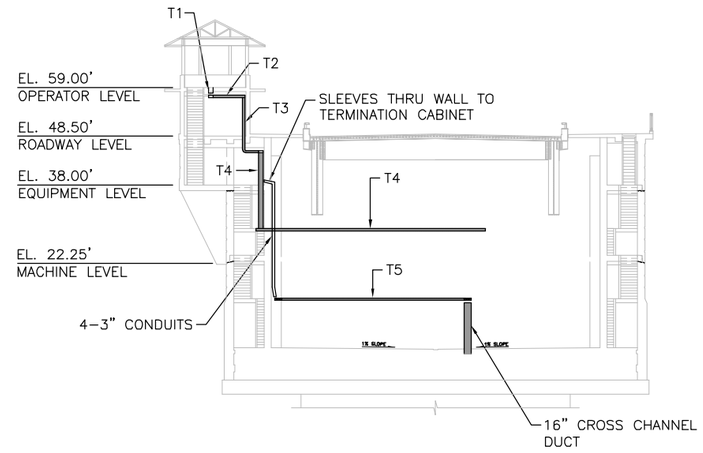

ROADWAY LEVEL POWER WIRING PLAN - CONTROL TOWER

SCALE: 1' 0' 2' 4'

OPERATOR LEVEL POWER WIRING PLAN - CONTROL TOWER

SCALE: 1' 0' 2' 4'

TOWER ELEVATION VIEW

FIELD BOOK:								
SURVEYED:								
SURVEY BASE MAP:								
DESIGN ENTERED:	F. HAYWOOD	12/2008						
DESIGNED	G. PETERS	12/2008						
CHECKED:	R. STEEL	11/2009						
SUPERVISOR:	G. PETERS	01/2010	NUM.	REVISION	BY	DATE		

JOHN G. SCHALLER, STATE OF WASHINGTON, 46804, REGISTERED PROFESSIONAL ENGINEER

HNTB

FED. AID No.

PROJECT No. 300197

SURVEY No. 32-24-4-22

MAINTENANCE DIVISION No. 3

KING COUNTY DEPT. OF TRANSPORTATION
HAROLD TANIGUCHI, DIRECTOR

SOUTH PARK BRIDGE #3179 REPLACEMENT

NORTH CONTROL TOWER POWER WIRING

King County

BE02

SHEET 607 OF 667 SHEETS

316-63 (___)

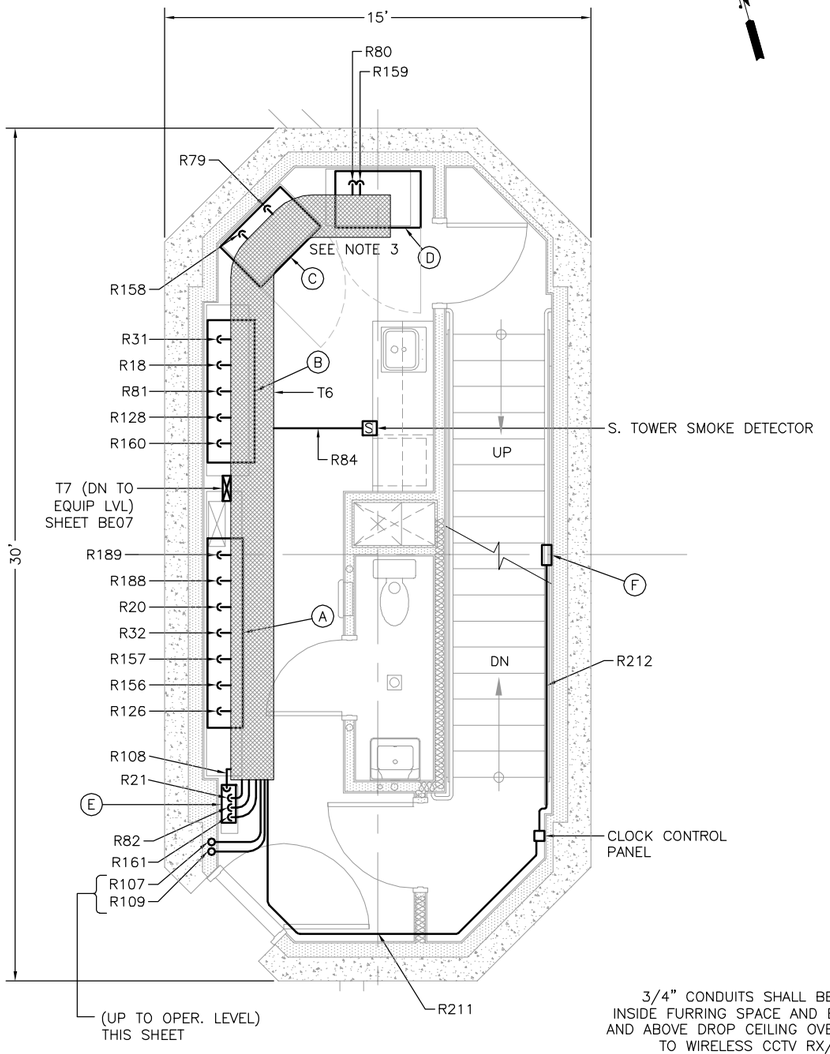

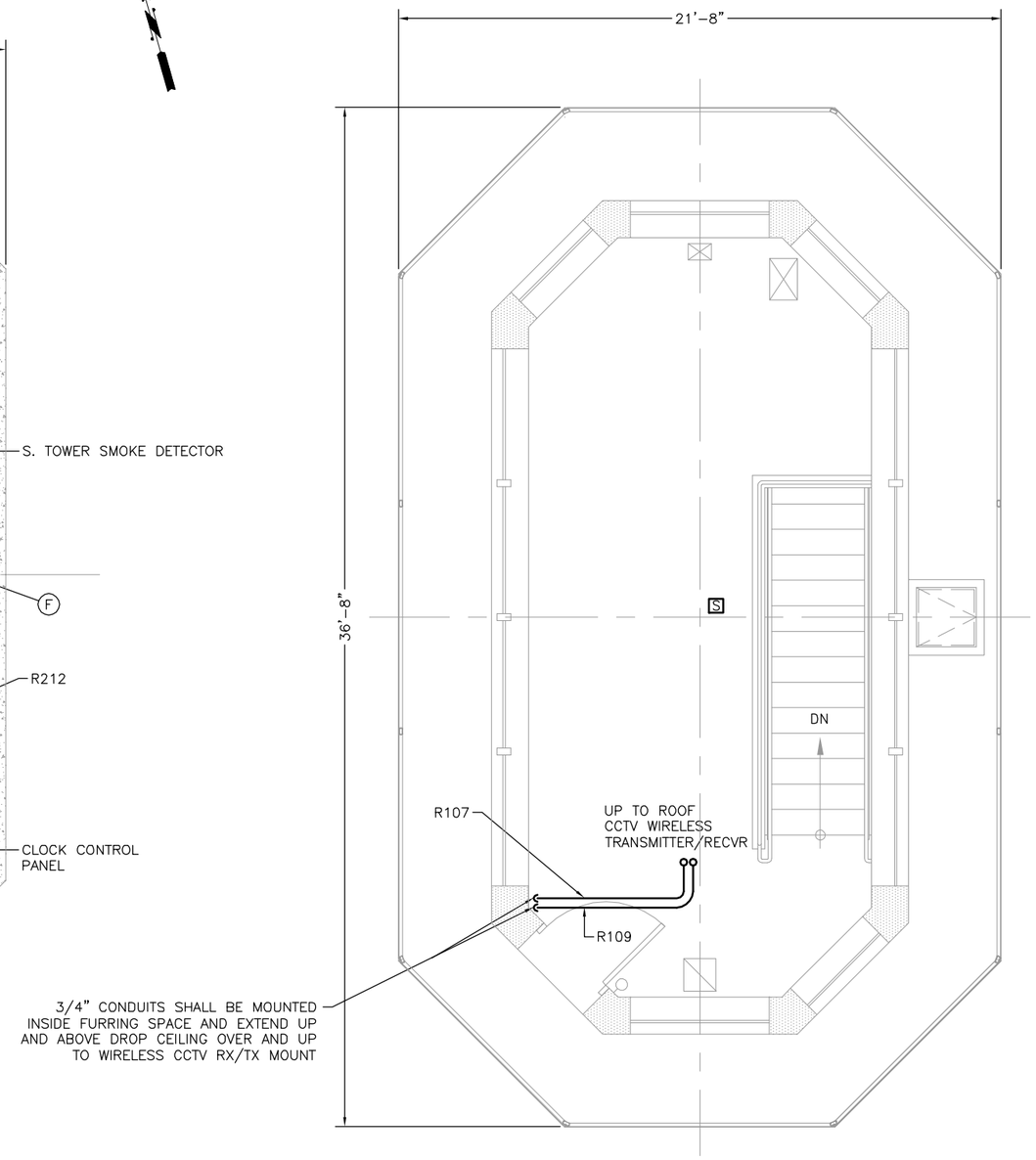

EQUIPMENT LEGEND

- (A) MOTOR CONTROL CENTER MCC-2
- (B) REMOTE PLC CABINET
- (C) S. DRIVE CONTROLLER 1
- (D) S. DRIVE CONTROLLER 2
- (E) PANEL BOARD LP-2
- (F) S. TOWER CLOCK

[S] DENOTE SMOKE DETECTOR

NOTES:

1. ROUTE CONDUITS ON OPERATOR'S LEVEL WITHIN FURRED WALLS.
2. SEE SHEET BE31 FOR SYMBOL LEGEND.
3. ROUTE CABLE TRAY ON ROADWAY LEVEL TO AVOID STRUCTURAL SUPPORT BEAMS. LOWER TRAY DOWN TO PASS UNDER BEAMS, OTHERWISE LOCATE BOTTOM OF TRA 8'-4" A.F.F.

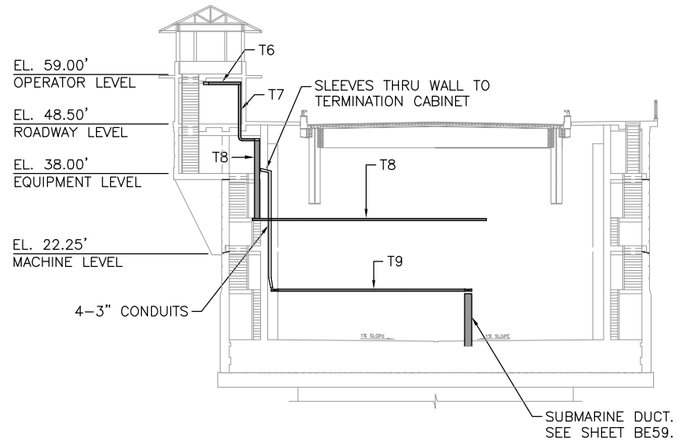

OPERATOR LEVEL POWER WIRING PLAN - CONTROL TOWER

SCALE: 1' 0' 2' 4'

ROADWAY LEVEL POWER WIRING PLAN - CONTROL TOWER

SCALE: 1' 0' 2' 4'

TOWER ELEVATION VIEW

FIELD BOOK:		
SURVEYED:		
SURVEY BASE MAP:		
DESIGN ENTERED:	F. HAYWOOD	4/2009
DESIGNED	G. PETERS	4/2009
CHECKED:	R. STEEL	11/2009
SUPERVISOR:	G. PETERS	01/2010

NUM.	REVISION	BY	DATE

JOHN G. SCHALLERT, STATE OF WASHINGTON, 46084, REGISTERED PROFESSIONAL ENGINEER

HNTB

FED. AID No.

PROJECT No. 300197

SURVEY No. 32-24-4-22

MAINTENANCE DIVISION No. 3

KING COUNTY DEPT. OF TRANSPORTATION

HAROLD TANIGUCHI, DIRECTOR

SOUTH PARK BRIDGE #3179 REPLACEMENT

SOUTH CONTROL TOWER POWER WIRING

King County

BE03

SHEET 608 OF 667 SHEETS

316-63 (____)

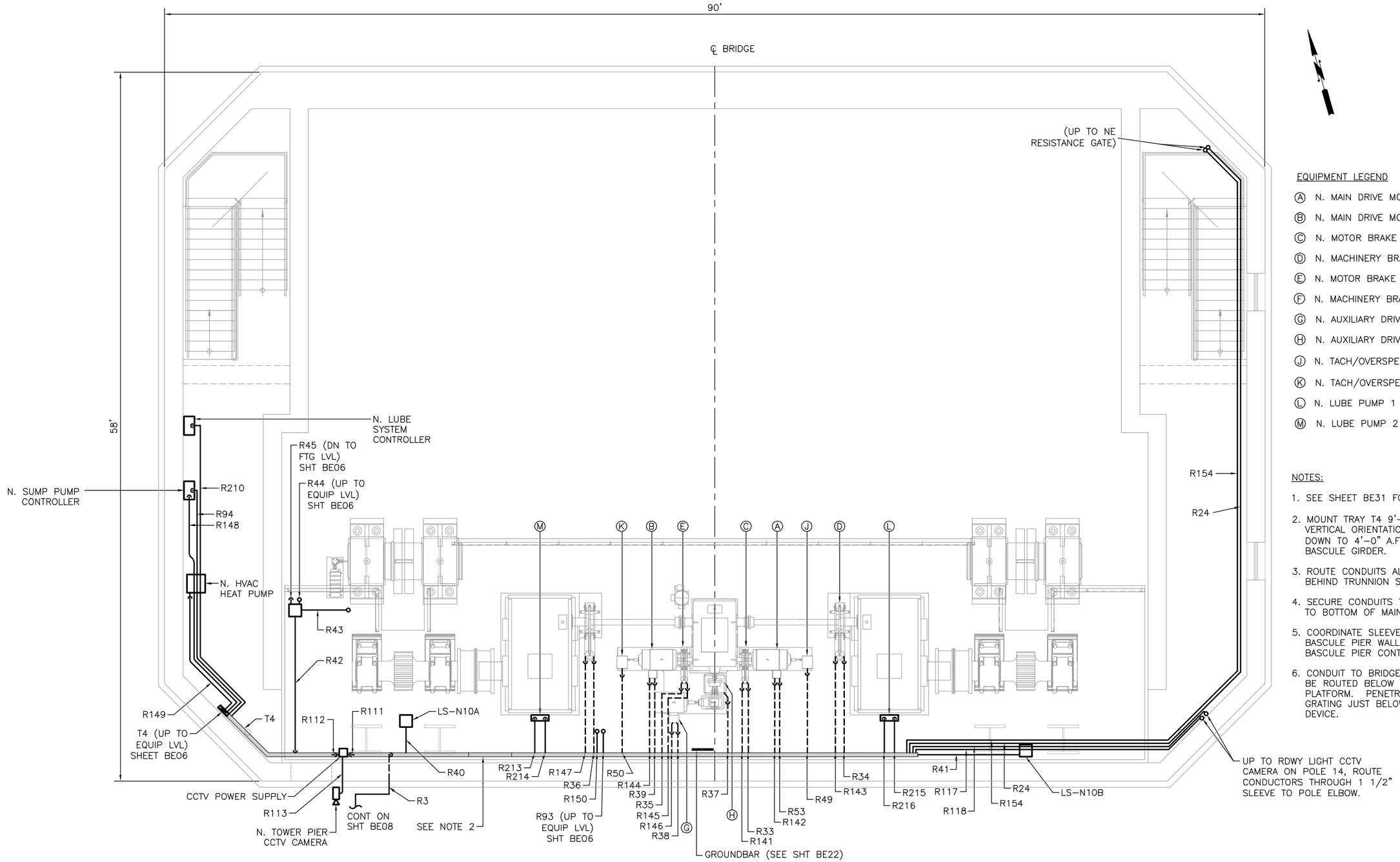

NORTH MACHINE LEVEL POWER WIRING PLAN

SCALE: 1' 0' 2' 4'

EQUIPMENT LEGEND

- Ⓐ N. MAIN DRIVE MOTOR 1
- Ⓑ N. MAIN DRIVE MOTOR 2
- Ⓒ N. MOTOR BRAKE A
- Ⓓ N. MACHINERY BRAKE A
- Ⓔ N. MOTOR BRAKE B
- Ⓕ N. MACHINERY BRAKE B
- Ⓖ N. AUXILIARY DRIVE MOTOR
- Ⓗ N. AUXILIARY DRIVE CLUTCH
- Ⓙ N. TACH/OVERSPEED 1
- Ⓚ N. TACH/OVERSPEED 2
- Ⓛ N. LUBE PUMP 1 CONTROLLER
- Ⓜ N. LUBE PUMP 2 CONTROLLER

NOTES:

1. SEE SHEET BE31 FOR SYMBOL LEGEND.
2. MOUNT TRAY T4 9'-6" A.F.F. IN VERTICAL ORIENTATION. TRANSITION DOWN TO 4'-0" A.F.F. TO GO UNDER BASCULE GIRDER.
3. ROUTE CONDUITS ALONG PIER WALL BEHIND TRUNNION SUPPORT COLUMN.
4. SECURE CONDUITS TO MACHINERY AREA TO BOTTOM OF MAINTENANCE PLATFORM.
5. COORDINATE SLEEVE LOCATIONS WITHIN BASCULE PIER WALLS AND FLOORS WITH BASCULE PIER CONTRACTOR.
6. CONDUIT TO BRIDGE MACHINERY SHALL BE ROUTED BELOW MAINTENANCE PLATFORM. PENETRATE PLATFORM GRATING JUST BELOW EQUIPMENT OR DEVICE.

FIELD BOOK:					
SURVEYED:					
SURVEY BASE MAP:					
DESIGN ENTERED:	F. HAYWOOD	4/2009			
DESIGNED	G. PETERS	4/2009			
CHECKED:	R. STEEL	11/2009			
SUPERVISOR:	G. PETERS	01/2010			
			NUM.	REVISION	BY / DATE

JOHN G. SCHALLERT — STATE OF WASHINGTON — 46004 — REGISTERED PROFESSIONAL ENGINEER

HNTB

FED. AID No.

PROJECT No. 300197

SURVEY No. 32-24-4-22

MAINTENANCE DIVISION No. 3

KING COUNTY DEPT. OF TRANSPORTATION
HAROLD TANIGUCHI, DIRECTOR

SOUTH PARK BRIDGE #3179 REPLACEMENT

NORTH PIER MACHINE LEVEL POWER WIRING PLAN

King County

BE04

SHEET 609 OF 667 SHEETS

316-63 (___)

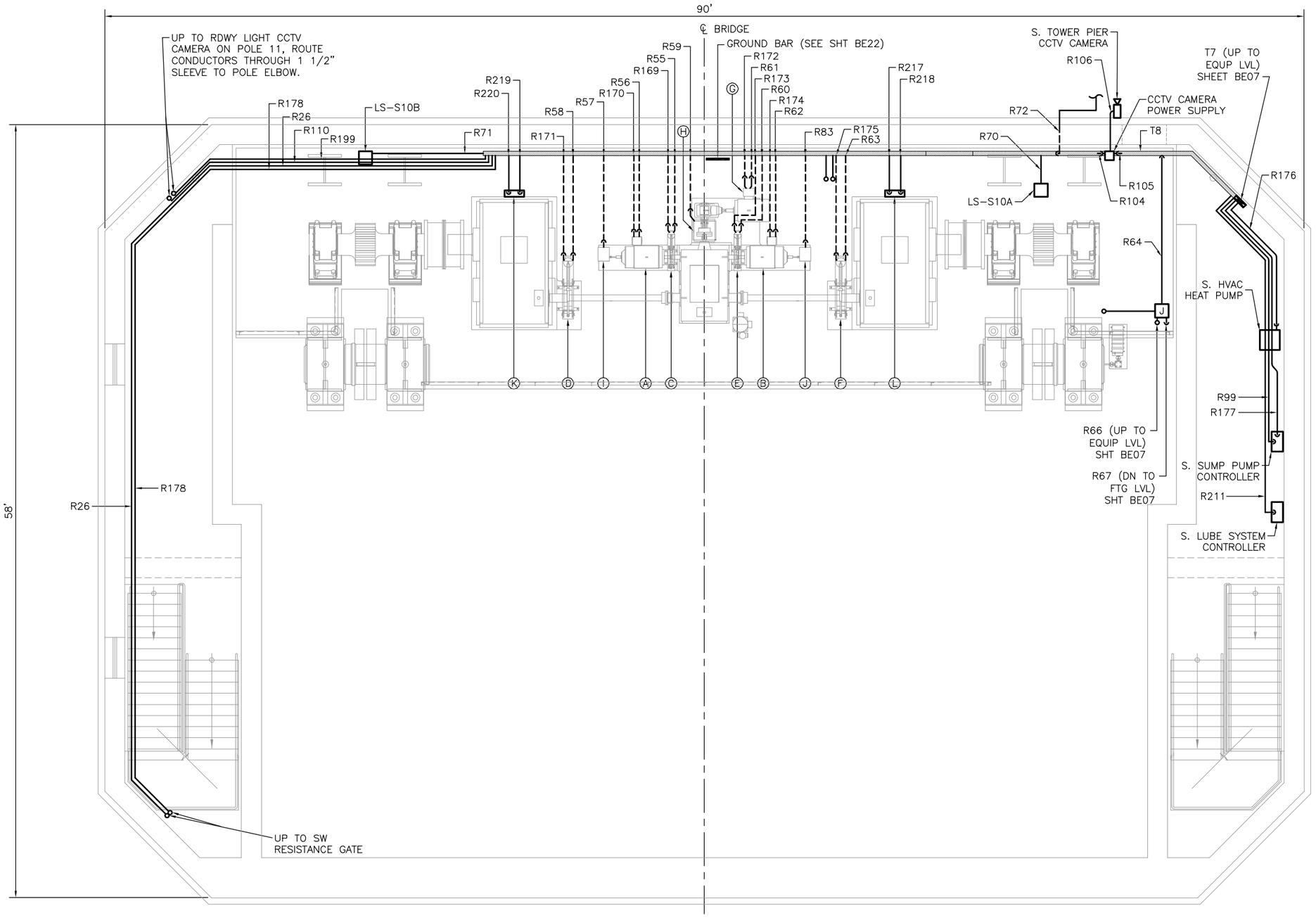

EQUIPMENT LEGEND

- Ⓐ S. MAIN DRIVE MOTOR 1
- Ⓑ S. MAIN DRIVE MOTOR 2
- Ⓒ S. MOTOR BRAKE A
- Ⓓ S. MACHINERY BRAKE A
- Ⓔ S. MOTOR BRAKE B
- Ⓕ S. MACHINERY BRAKE B
- Ⓖ S. AUXILIARY DRIVE MOTOR
- Ⓗ S. AUXILIARY DRIVE CLUTCH
- Ⓘ S. TACH/OVERSPEED 1
- Ⓙ S. TACH/OVERSPEED 2
- Ⓚ S. LUBE PUMP 1 CONTROLLER
- Ⓛ S. LUBE PUMP 2 CONTROLLER

NOTES:

1. SEE SHEET BE31 FOR SYMBOL LEGEND.
2. MOUNT TRAY T4 9'-6" A.F.F. IN VERTICAL ORIENTATION. TRANSITION DOWN TO 4'-0" A.F.F. TO GO UNDER BASCULE GIRDER.
3. ROUTE CONDUITS ALONG PIER WALL BEHIND TRUNNION SUPPORT COLUMN.
4. SECURE CONDUITS TO MACHINERY AREA TO BOTTOM OF MAINTENANCE PLATFORM.
5. COORDINATE SLEEVE LOCATIONS WITHIN BASCULE PIER WALLS AND FLOORS WITH BASCULE PIER CONTRACTOR.
6. CONDUIT TO BRIDGE MACHINERY SHALL BE ROUTED BELOW MAINTENANCE PLATFORM. PENETRATE PLATFORM GRATING JUST BELOW EQUIPMENT OR DEVICE.

SOUTH MACHINE LEVEL POWER WIRING PLAN

SCALE: 1' 0' 2' 4'

FIELD BOOK:			
SURVEYED:			
SURVEY BASE MAP:			
DESIGN ENTERED:	F. HAYWOOD	4/2009	
DESIGNED	G. PETERS	4/2009	
CHECKED:	R. STEEL	11/2009	
SUPERVISOR:	G. PETERS	01/2010	

NUM.	REVISION	BY	DATE

JOHN G. SCHAITBERGER STATE OF WASHINGTON 40004 REGISTERED PROFESSIONAL ENGINEER

HNTB

FED. AID No. _____

PROJECT No. 300197

SURVEY No. 32-24-4-22

MAINTENANCE DIVISION No. 3

KING COUNTY DEPT. OF TRANSPORTATION
HAROLD TANIGUCHI, DIRECTOR

SOUTH PARK BRIDGE #3179 REPLACEMENT

SOUTH PIER MACHINE LEVEL POWER WIRING PLAN

King County

BE05

SHEET 610 OF 667 SHEETS

316-63 (___)

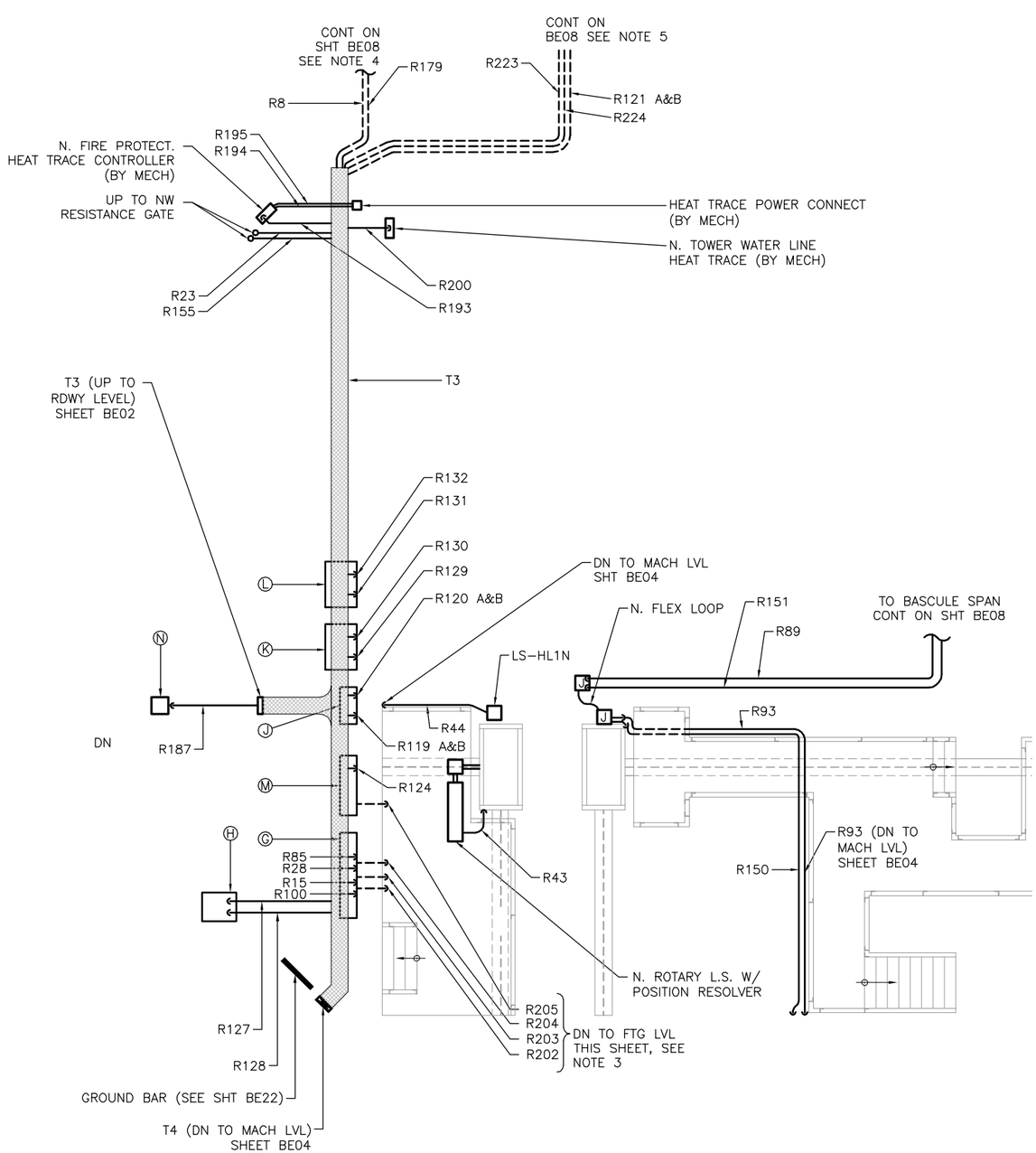

EQUIPMENT LEVEL POWER WIRING PLAN - CONTROL TOWER

SCALE: 1' 0' 2' 4'

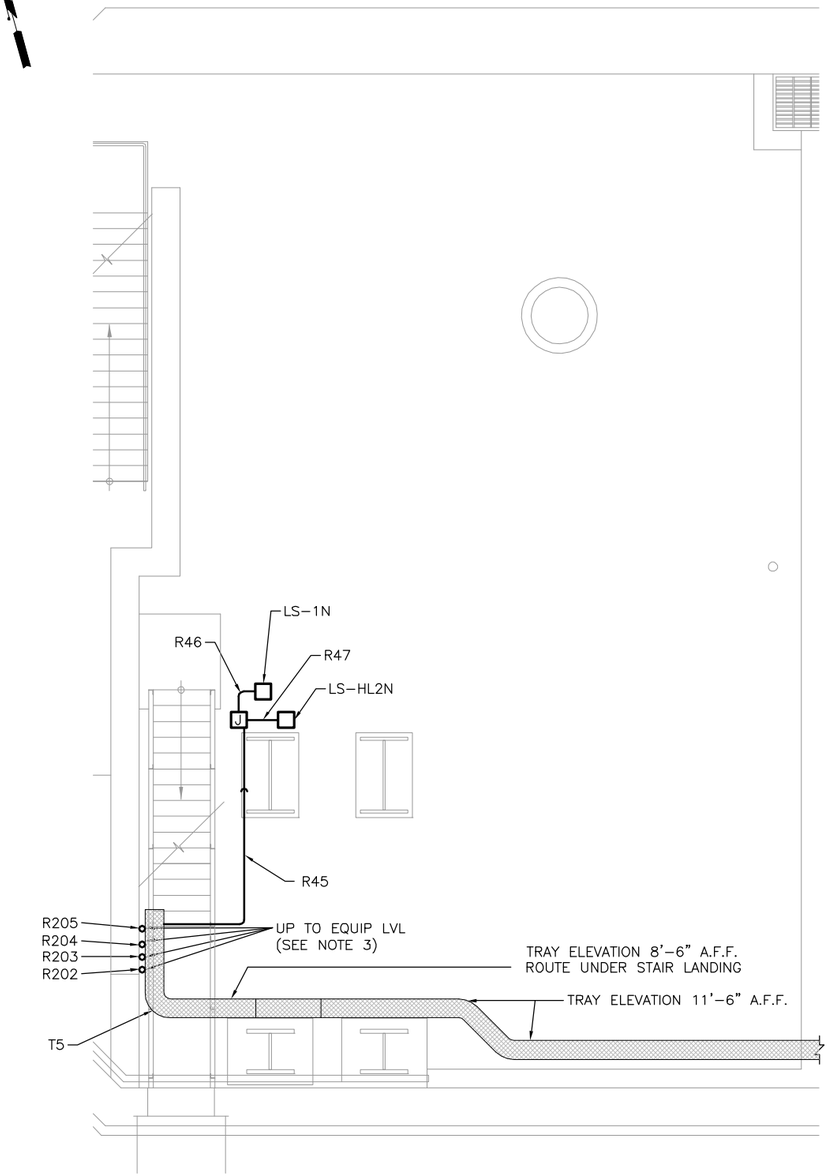

FOOTING LEVEL POWER WIRING PLAN - CONTROL TOWER

SCALE: 1' 0' 2' 4'

EQUIPMENT LEGEND

- (G) N. CROSS CHANNEL CABLE (CONTROL)
- (H) TRANSFORMER TX-1
- (J) MAIN SERVICE DISCONNECT
- (K) N. DRIVE 1 ISOLATION TRANS.
- (L) N. DRIVE 2 ISOLATION TRANS.
- (M) N. CROSS CHANNEL CABLE (POWER)
- (N) N. TOWER AIR HANDLER

NOTES:

1. SEE SHEET BE31 FOR SYMBOL LEGEND.
2. SEE SHEETS FP06 AND FP08 FOR FURTHER DETAILS OF HEAT TRACING SYSTEM.
3. SWEEP CONDUITS DOWN WALL TO END OVER CABLE TRAY.
4. CONDUITS SHALL EXIT PIER AT AN ELEVATION TO BE ROUTED IN THE APPROACH SPAN SIDEWALK DECK. SEE SHEET AS65 FOR FURTHER DETAILS.
5. COORDINATE SLEEVE LOCATIONS IN PIER WALL WITH BASCULE PIER CONTRACTOR. SEE SHEET AS65 FOR FURTHER DETAILS.
6. ROUTE CABLE TRAY AND CONDUITS TO AVOID STRUCTURAL SUPPORT BEAMS, AND PLUMBING PIPE.

FIELD BOOK:					
SURVEYED:					
SURVEY BASE MAP:					
DESIGN ENTERED: F. HAYWOOD	12/2008				
DESIGNED G. PETERS	12/2008				
CHECKED: R. STEEL	11/2009				
SUPERVISOR: G. PETERS	01/2010	NUM.	REVISION	BY	DATE

JOHN G. SCHALLERT STATE OF WASHINGTON REGISTERED PROFESSIONAL ENGINEER

HNTB

FED. AID No.

PROJECT No. 300197

SURVEY No. 32-24-4-22

MAINTENANCE DIVISION No. 3

KING COUNTY DEPT. OF TRANSPORTATION
HAROLD TANIGUCHI, DIRECTOR

SOUTH PARK BRIDGE #3179 REPLACEMENT

NORTH PIER EQUIPMENT LEVEL AND FOOTING LEVEL POWER WIRING

King County

BE06

SHEET 611 OF 667 SHEETS

316-63 (___)

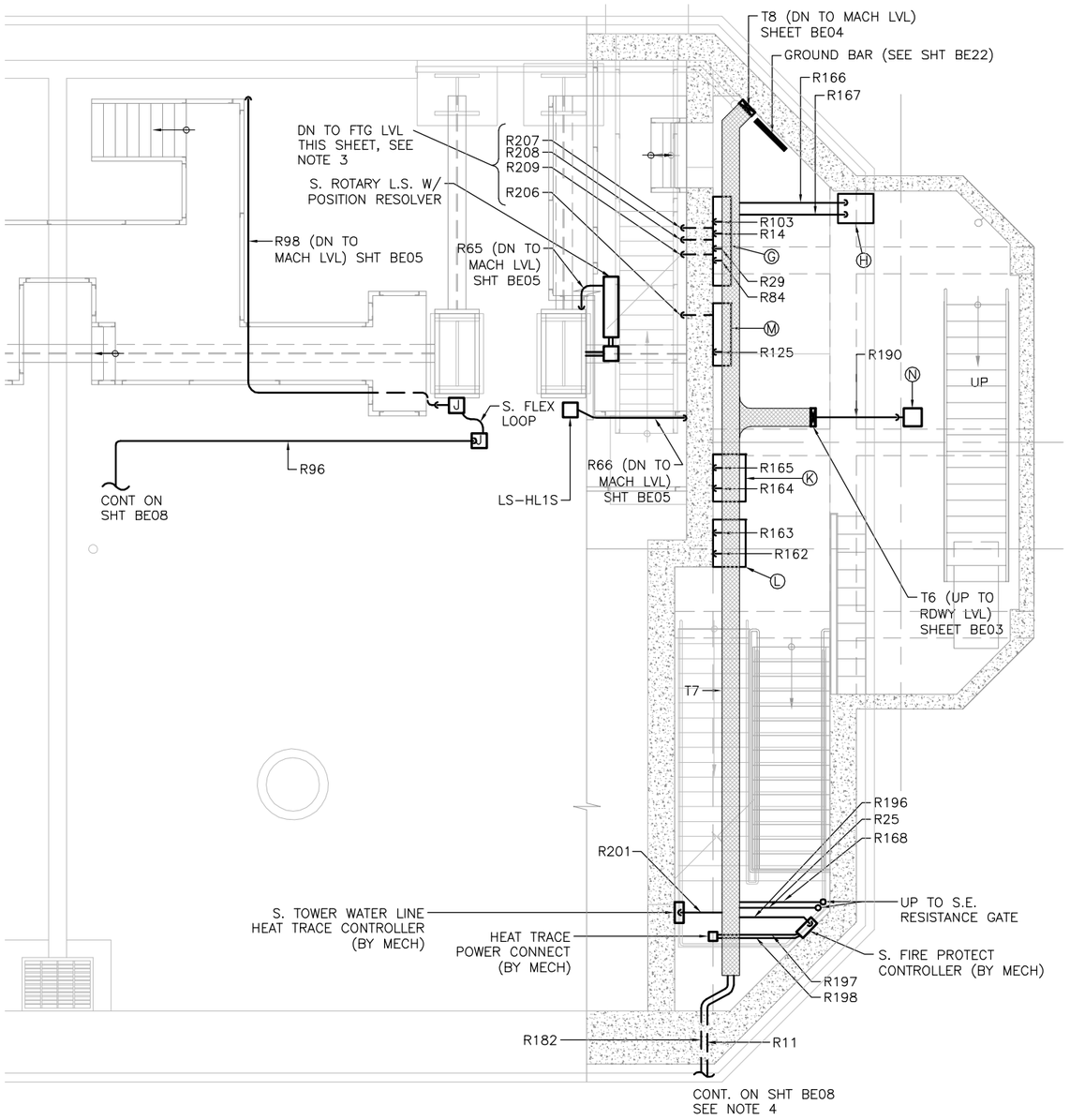

EQUIPMENT LEVEL POWER WIRING PLAN - CONTROL TOWER

SCALE: 1' 0' 2' 4'

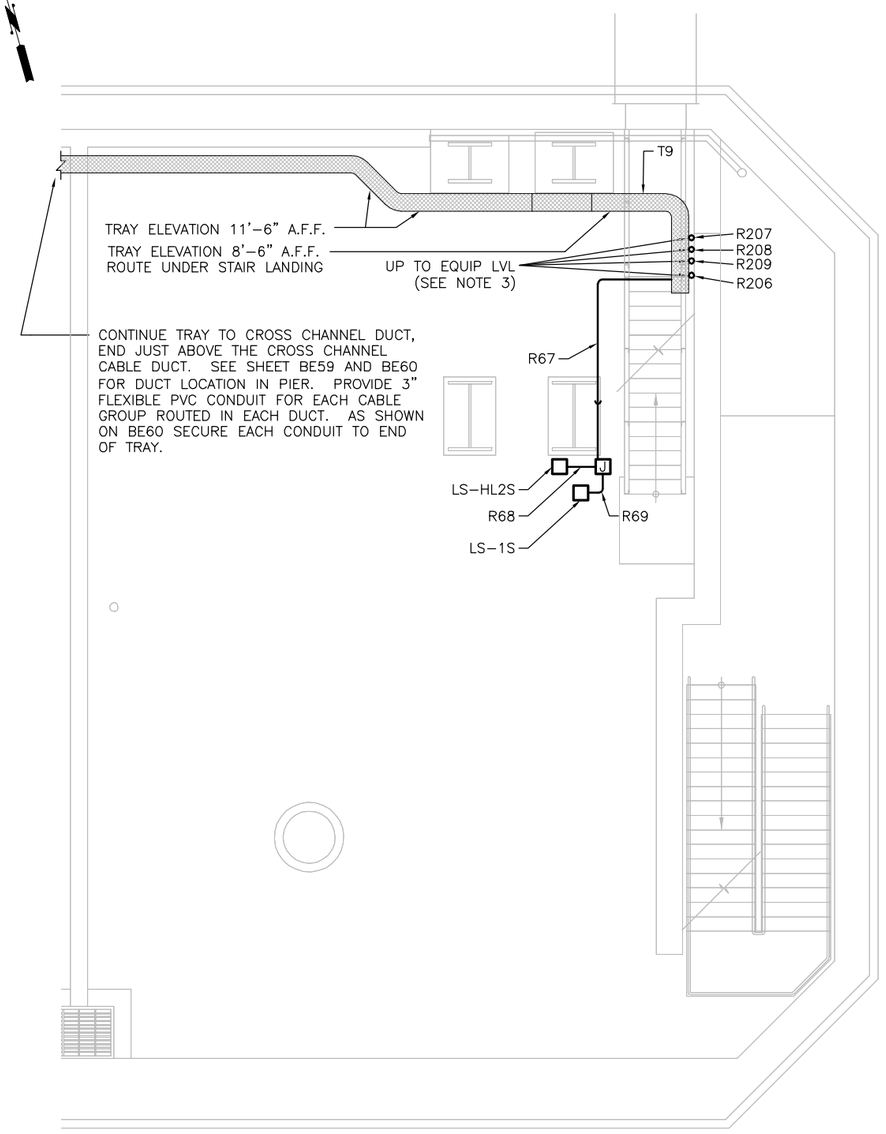

FOOTING LEVEL POWER WIRING PLAN - CONTROL TOWER

SCALE: 1' 0' 2' 4'

EQUIPMENT LEGEND

- G S. CROSS CHANNEL CABLE (CONTROL)
- H TRANSFORMER TX-2
- K S. DRIVE 1 ISOLATION TRANS.
- L S. DRIVE 2 ISOLATION TRANS.
- M S. CROSS CHANNEL CABLE (POWER)
- N S. TOWER AIR HANDLER

NOTES:

1. SEE SHEET BE31 FOR SYMBOL LEGEND.
2. SEE SHEETS FP06 AND FP08 FOR FURTHER DETAILS OF HEAT TRACING SYSTEM.
3. SWEEP CONDUITS DOWN WALL TO END OVER CABLE TRAY.
4. CONDUITS SHALL EXIT PIER AT AN ELEVATION TO BE ROUTED IN THE SIDEWALK DECK. COORDINATE SLEEVE POSITIONS WITH BASCULE PIER CONTRACTOR. SEE AS65 FOR FURTHER DETAILS.

FIELD BOOK:		
SURVEYED:		
SURVEY BASE MAP:		
DESIGN ENTERED:	F. HAYWOOD	12/2008
DESIGNED	G. PETERS	12/2008
CHECKED:	R. STEEL	11/2009
SUPERVISOR:	G. PETERS	01/2010

NUM.	REVISION	BY	DATE

JOHN G. SCHALLER STATE OF WASHINGTON 45684 REGISTERED PROFESSIONAL ENGINEER

HNTB

FED. AID No.

PROJECT No. 300197

SURVEY No. 32-24-4-22

MAINTENANCE DIVISION No. 3

KING COUNTY DEPT. OF TRANSPORTATION
HAROLD TANIGUCHI, DIRECTOR

SOUTH PARK BRIDGE #3179 REPLACEMENT

SOUTH PIER EQUIPMENT LEVEL AND FOOTING LEVEL POWER WIRING

King County

BE07

SHEET 612 OF 667 SHEETS

316-63 (____)

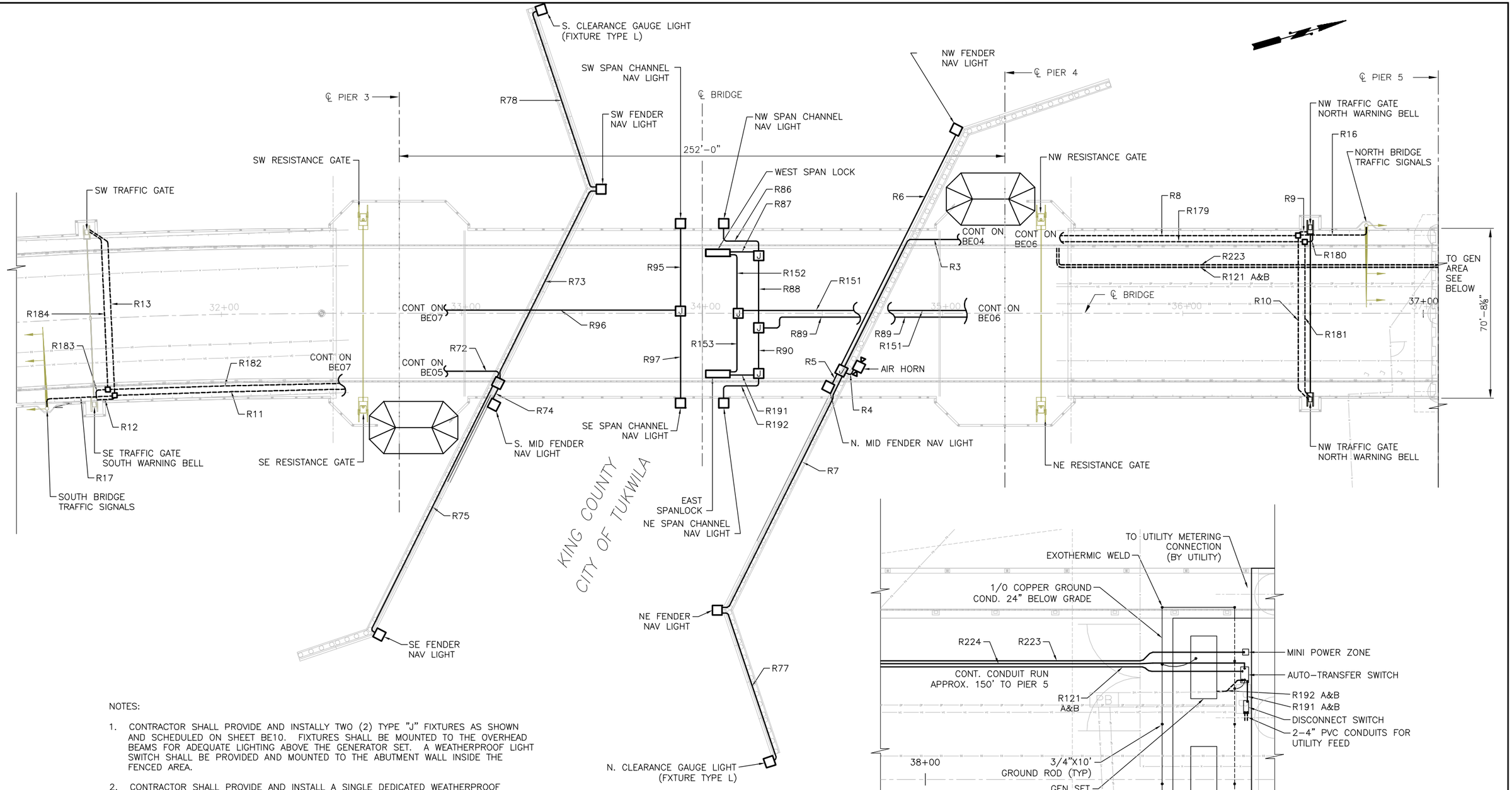

SERVICE ENTRANCE/GENERATOR PLAN

NTS

NOTES:

1. CONTRACTOR SHALL PROVIDE AND INSTALLY TWO (2) TYPE "J" FIXTURES AS SHOWN AND SCHEDULED ON SHEET BE10. FIXTURES SHALL BE MOUNTED TO THE OVERHEAD BEAMS FOR ADEQUATE LIGHTING ABOVE THE GENERATOR SET. A WEATHERPROOF LIGHT SWITCH SHALL BE PROVIDED AND MOUNTED TO THE ABUTMENT WALL INSIDE THE FENCED AREA.
2. CONTRACTOR SHALL PROVIDE AND INSTALL A SINGLE DEDICATED WEATHERPROOF MAINTENANCE RECEPTACLE FOR THE GENERATOR BATTERY CHARGER.
3. CONTRACTOR SHALL PROVIDE TWO WEATHERPROOF RECEPTACLES MOUNTED ON THE ABUTMENT WALL INSIDE THE FENCED AREA. RECEPTACLES SHALL BE MOUNTED 48 INCHES ABOVE GROUND LEVEL.
4. LIGHTING, RECEPTACLES, BATTERY CHARGER, ATS CONTROL AND GENERATOR BLOCK HEATER SHALL BE FED FROM THE MINI POWERZONE MOUNTED ON THE ABUTMENT WALL AND LOCATED INSIDE THE FENCED AREA (SEE PANELBOARD SCHEDULE ON PLAN SHEET BE27).

PLAN

10 5 0 10 20

SCALE IN FEET

FIELD BOOK:		
SURVEYED:		
SURVEY BASE MAP:		
DESIGN ENTERED:	F. HAYWOOD	09/2009
DESIGNED	G. PETERS	09/2009
CHECKED:	R. STEEL	11/2009
SUPERVISOR:	G. PETERS	01/2010

NUM.	REVISION	BY	DATE

JOHN G. SCHALLERT, STATE OF WASHINGTON, 48604, REGISTERED PROFESSIONAL ENGINEER

HNTB

FED. AID No.

PROJECT No. 300197

SURVEY No. 32-24-4-22

MAINTENANCE DIVISION No. 3

KING COUNTY DEPT. OF TRANSPORTATION

HAROLD TANIGUCHI, DIRECTOR

SOUTH PARK BRIDGE #3179 REPLACEMENT

BASCULE SPANS POWER WIRING

King County

BE08

SHEET 613 OF 667 SHEETS

316-63 (____)

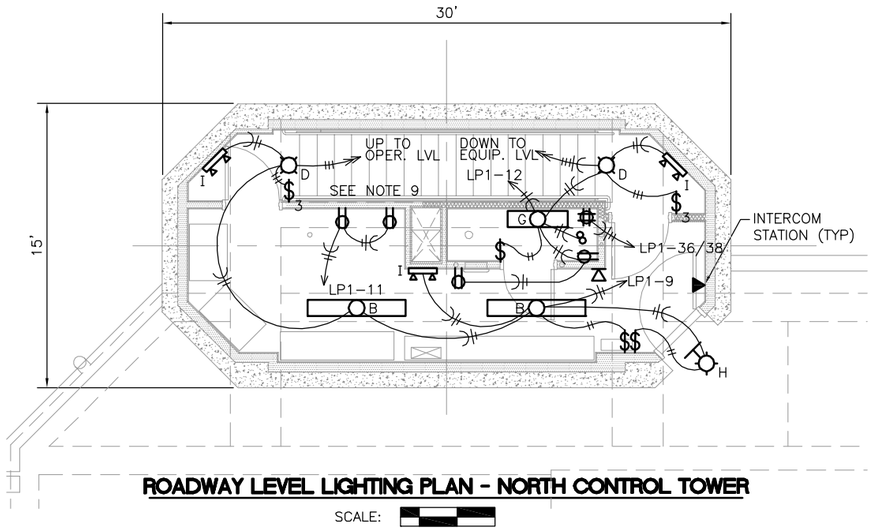

ROADWAY LEVEL LIGHTING PLAN - NORTH CONTROL TOWER

SCALE: 1' 0' 2' 4'

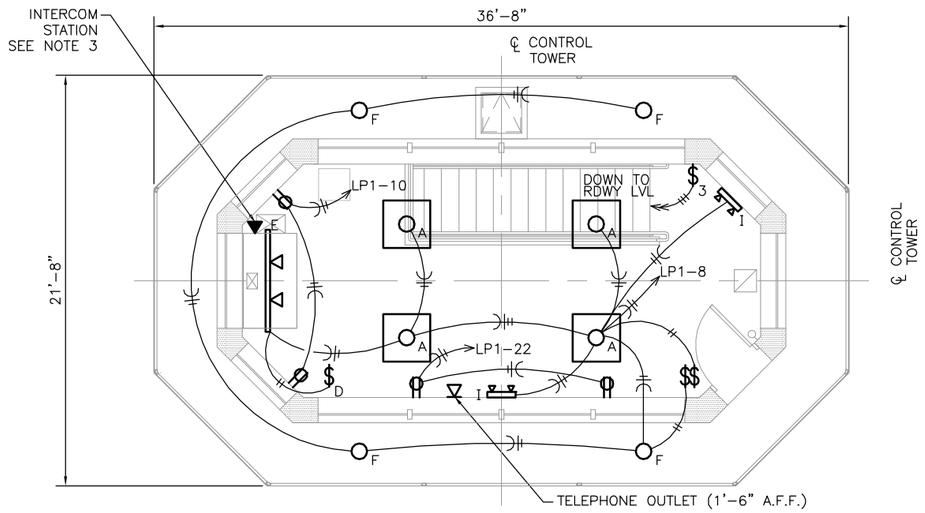

OPERATOR LEVEL LIGHTING PLAN - NORTH CONTROL TOWER

SCALE: 1' 0' 2' 4'

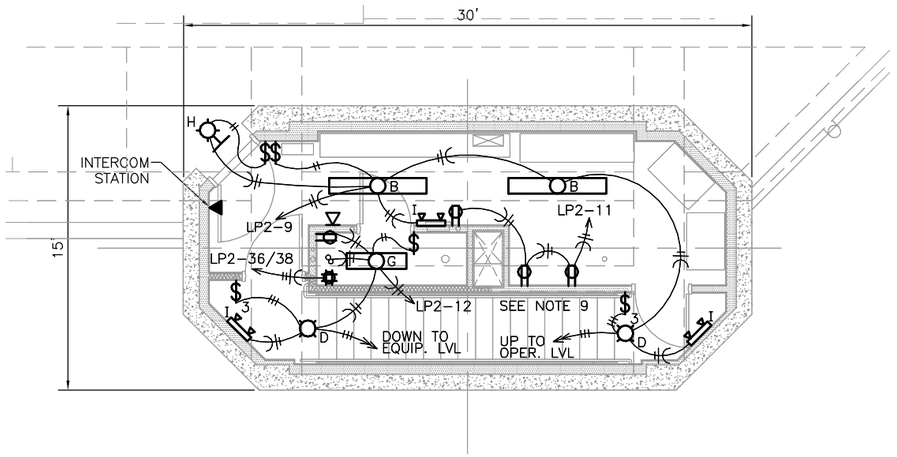

ROADWAY LEVEL LIGHTING PLAN - SOUTH CONTROL TOWER

SCALE: 1' 0' 2' 4'

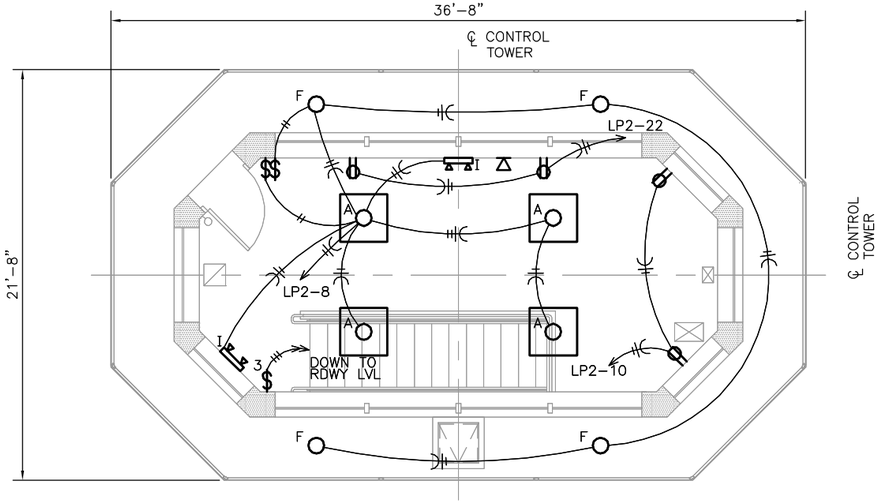

OPERATOR LEVEL LIGHTING PLAN - SOUTH CONTROL TOWER

SCALE: 1' 0' 2' 4'

NOTES:

1. MOUNT TYPE B&G FIXTURES TO SUPPORT BEAM AND BELOW HVAC DUCT.
2. MOUNT TYPE F FIXTURE IN SOFFIT.
3. LOCATED DESKTOP INTERCOM STATION ON TOP SECTION OF CONTROL CONSOLE.
4. MOUNT LIGHT SWITCHES 4'-0" A.F.F.
5. MOUNT RECEPTACLES 1'-6" A.F.F.
6. GFCI RECEPTACLES SHALL BE INSTALLED PER NEC REQUIREMENTS.
7. PROVIDE 3/4" CONDUIT BETWEEN ALL TELEPHONE OUTLETS. ROUTE TO EQUIPMENT LEVEL TELEPHONE JUNCTION BOX.
8. MOUNT OPERATOR LEVEL TELEPHONE OUTLETS 1'-6" A.F.F. MOUNT ROADWAY LEVEL OUTLETS 4'-0" A.F.F.
9. MOUNT 1 RECEPTACLE 18" A.F.F. FOR UNDER COUNTER REFRIGERATOR AND 1 RECEPTACLE 6'-0" A.F.F. FOR CABINET MOUNT MICROWAVE.

FIXTURE SCHEDULE

FIXTURE PLAN MARK	FIXTURE TYPE
A	CONTROL ROOM LIGHTING, 2' PARABOLIC TROFFER, LITHONIA, MODEL #2PM3GB3179LD120GEBPAF
B	ROADWAY LEVEL LIGHTING, 4' LOW PROFILE FLUORESCENT, LITHONIA MODEL #LB232120GEBDSQ6
D	STAIRWAY LIGHTING, 10", RUUD LIGHTING, CAT. #SS028-ULW
E	CONTROL CONSOLE TRACK LIGHTING, RUUD LIGHTING, CAT. #TRB2R
F	EXTERIOR SOFFIT WALKWAY LIGHTING, LITHONIA, CAT. #LF6-1/32TRT-F601A-120
G	2' FLUORESCENT LIGHITNG, LITHONIA, CAT. #LB232120GESQ6
H	EXIT DOOR WALL PACK, 12", RUUD LIGHTING, CAT. #MGWP0507, WITH WIRE GUARD CAT. #FWG-MW
I	EMERGENCY LIGHTS, SPECTRON SERIES, LUMENETTE SERIES 1, MODEL # ML-4E-1

FIELD BOOK:		
SURVEYED:		
SURVEY BASE MAP:		
DESIGN ENTERED:	F. HAYWOOD	4/2009
DESIGNED	G. PETERS	4/2009
CHECKED:	R. STEEL	11/2009
SUPERVISOR:	G. PETERS	01/2010

NUM.	REVISION	BY	DATE

JOHN G. SCHALLERT, STATE OF WASHINGTON, 45684, REGISTERED PROFESSIONAL ENGINEER

HNTB

FED. AID No.

PROJECT No. 300197

SURVEY No. 32-24-4-22

MAINTENANCE DIVISION No. 3

KING COUNTY DEPT. OF TRANSPORTATION

HAROLD TANIGUCHI, DIRECTOR

SOUTH PARK BRIDGE #3179 REPLACEMENT

CONTROL TOWER LIGHTING PLAN

King County

BE09

SHEET 614 OF 667 SHEETS

316-63 (____)

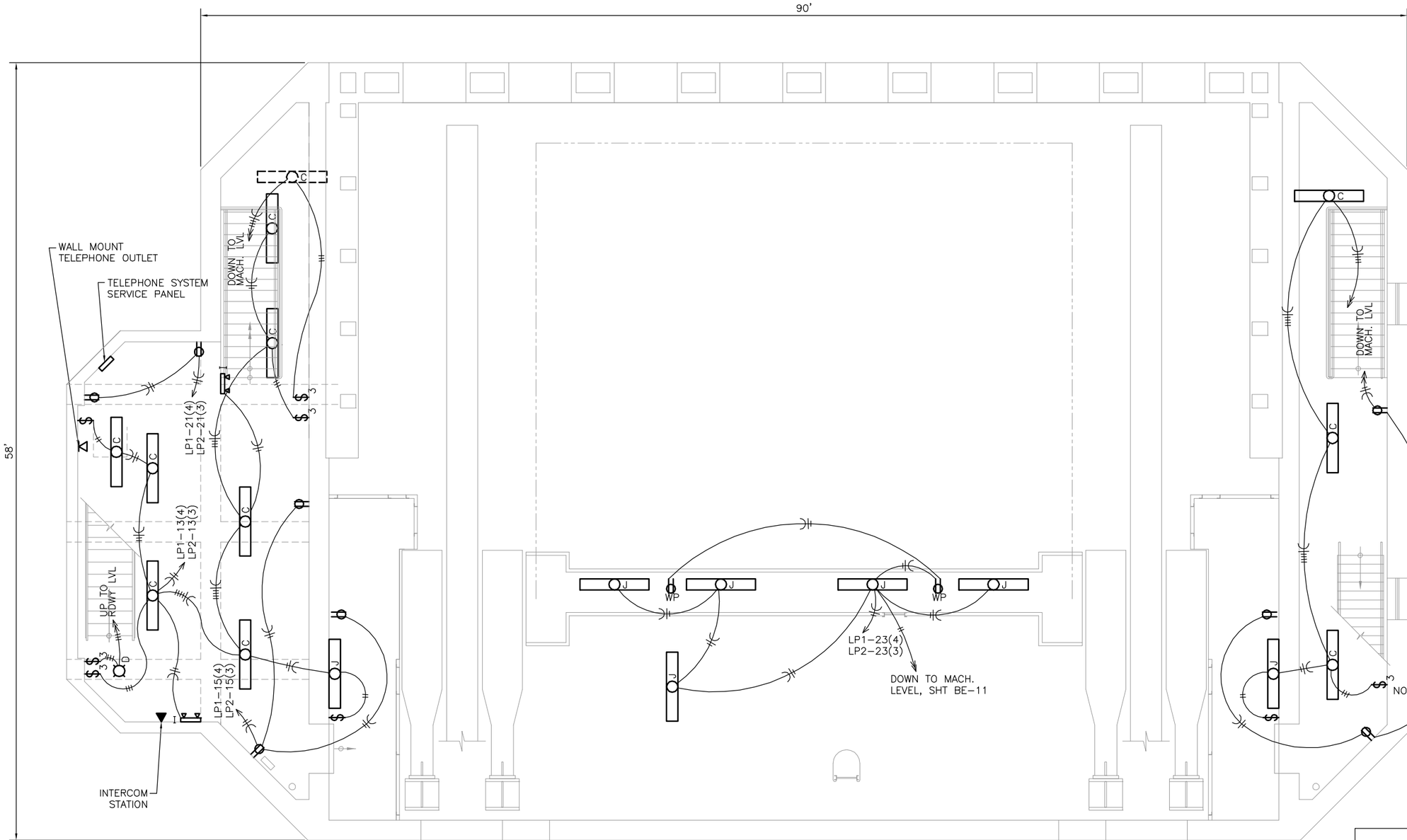

NOTES:

1. MOUNT TYPE C FIXTURES 7'-9" A.F.F.
2. LOCATE SWITCH NEAR TOP OF STAIRS AND BELOW SIDEWALK ENTRANCE HATCH.
3. PIER REFERENCES ARE SHOWN IN PARENTHESIS, (3) FOR PIER 3, AND (4) FOR PIER 4.
4. MOUNT TYPE J FIXTURE TO PLATFORM RAILING SEE DETAIL, SHT BE-21.

EQUIPMENT LEVEL LIGHTING PLAN - CONTROL TOWER

SCALE: 1' 0' 2' 4'

FIXTURE SCHEDULE

FIXTURE PLAN MARK	FIXTURE TYPE
C	EQUIPMENT ROOM LIGHTING, 4' SUSPENDED FLUORESCENT, LITHONIA MODEL #EJ232120GEBDSQ12
D	STAIRWAY LIGHTING, 10", RUUD LIGHTING, CAT. #SS028-ULW
J	4' ENCLOSED FLUORESCENT LIGHTING, LITHONIA, CAT. #DM232AR120CWSTSL
I	EMERGENCY LIGHTS, SPECTRON SERIES, LUMENETTE SERIES 1, MODEL # ML-4E-1

FIELD BOOK:		
SURVEYED:		
SURVEY BASE MAP:		
DESIGN ENTERED:	F. HAYWOOD	4/2009
DESIGNED	G. PETERS	4/2009
CHECKED:	R. STEEL	11/2009
SUPERVISOR:	G. PETERS	01/2010

NUM.	REVISION	BY	DATE

JOHN G. SCHALLERT, STATE OF WASHINGTON, 45684, REGISTERED PROFESSIONAL ENGINEER

HNTB

FED. AID No.

PROJECT No. 300197

SURVEY No. 32-24-4-22

MAINTENANCE DIVISION No. 3

KING COUNTY DEPT. OF TRANSPORTATION
HAROLD TANIGUCHI, DIRECTOR

SOUTH PARK BRIDGE #3179 REPLACEMENT

EQUIPMENT LEVEL LIGHTING PLAN

King County

BE10

SHEET 615 OF 667 SHEETS

316-63 (____)

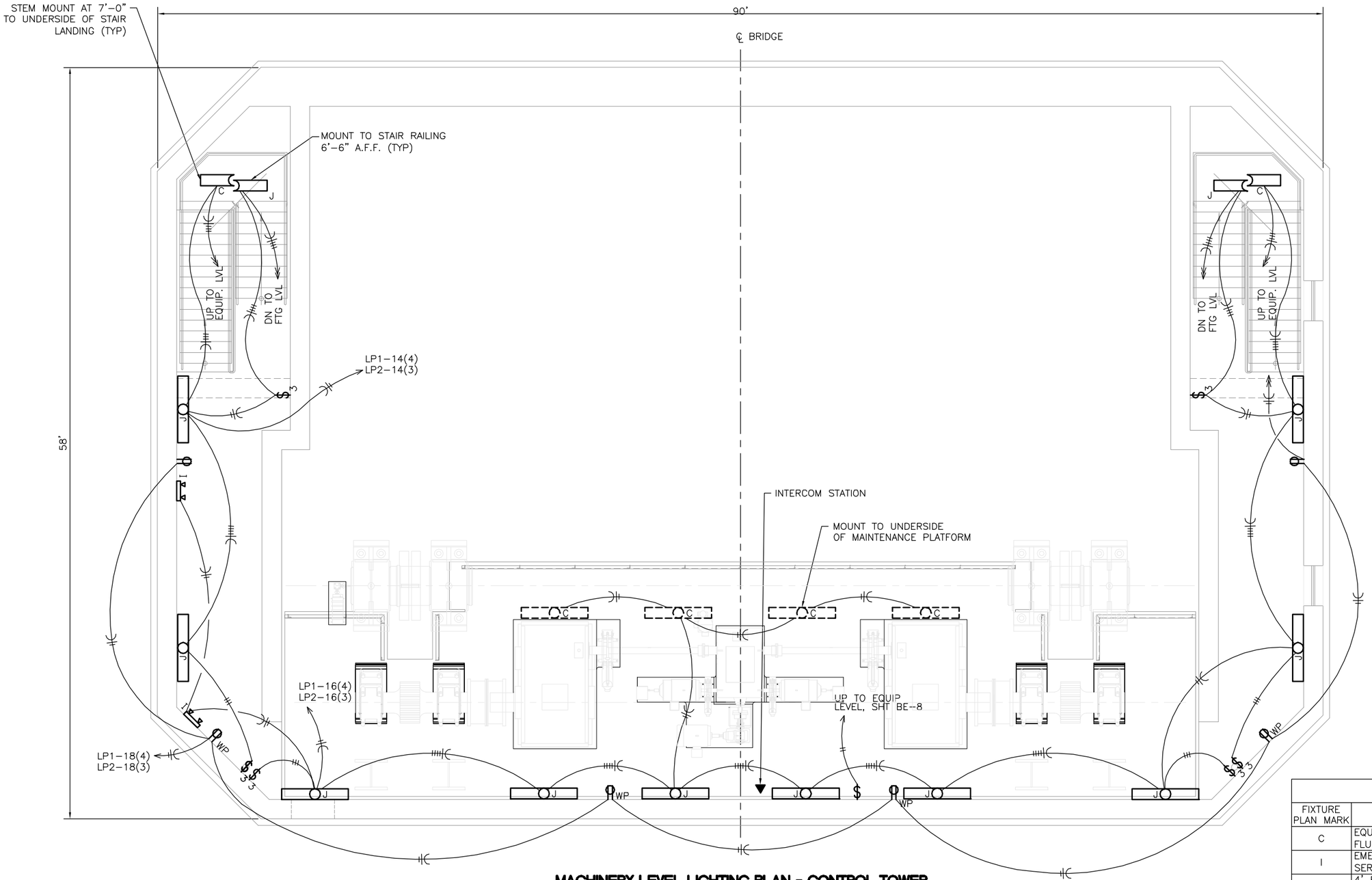

NOTES:

1. WALL MOUNT TYPE J FIXTURES 8'-6" A.F.F. IN MACHINERY DROP. AND 6'-6" A.F.F. IN ALL OTHER LOCATIONS.

2. MOUNT RECEPTACLES 24" A.F.F.

3. MOUNT LIGHT SWITCHES 48" A.F.F.

4. PIER REFERENCES ARE SHOWN IN PARENTHESIS. (3) FOR PIER 3 AND (4) FOR PIER 4.

5. MOUNT TYPE 'C' FIXTURES OVER MACHINERY 9'-0" A.F.F.

FIXTURE SCHEDULE

FIXTURE PLAN MARK	FIXTURE TYPE
C	EQUIPMENT ROOM LIGHTING, 4' SUSPENDED FLUORESCENT, LITHONIA MODEL #EJ232120GEBDSQ12
I	EMERGENCY LIGHTS, SPECTRON SERIES, LUMENETTE SERIES 1, MODEL # ML-4E-1
J	4' ENCLOSED FLUORESCENT LIGHTING, LITHONIA, CAT. #DM232AR120CWSTSL

MACHINERY LEVEL LIGHTING PLAN - CONTROL TOWER

SCALE: 1' 0' 2' 4'

FIELD BOOK:		
SURVEYED:		
SURVEY BASE MAP:		
DESIGN ENTERED:	F. HAYWOOD	4/2009
DESIGNED	G. PETERS	4/2009
CHECKED:	R. STEEL	11/2009
SUPERVISOR:	G. PETERS	01/2010

NUM.	REVISION	BY	DATE

JOHN G. SCHALLERT, STATE OF WASHINGTON, 45684, REGISTERED PROFESSIONAL ENGINEER

HNTB

FED. AID No.

PROJECT No. 300197

SURVEY No. 32-24-4-22

MAINTENANCE DIVISION No. 3

KING COUNTY DEPT. OF TRANSPORTATION
HAROLD TANIGUCHI, DIRECTOR

SOUTH PARK BRIDGE #3179 REPLACEMENT

MACHINERY LEVEL LIGHTING PLAN

King County

BE11

SHEET 616 OF 667 SHEETS

316-63 (____)

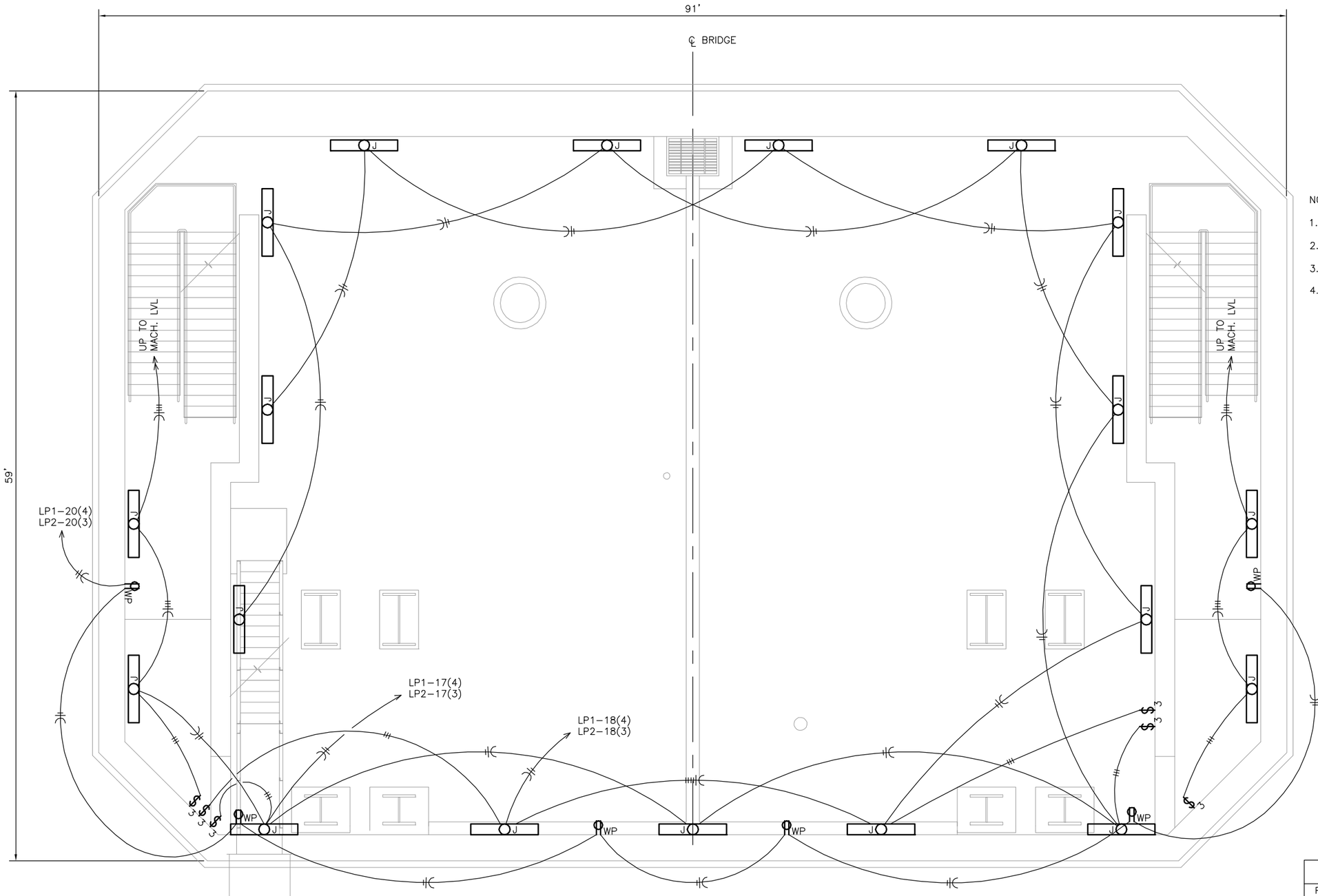

(PIER 4) (PIER 3)

NOTES:

1. MOUNT TYPE J FIXTURES 7'-0" A.F.F.
2. MOUNT RECEPTACLES 42" A.F.F.
3. MOUNT LIGHT SWITCHES 48" A.F.F.
4. PIER REFERENCES ARE SHOWN IN PARENTHESIS. (3) FOR PIER 3, AND (4) FOR PIER 4.

FOOTING LEVEL LIGHTING PLAN - BASCULE PIER

SCALE: 1' 0' 2' 4'

FIXTURE SCHEDULE	
FIXTURE PLAN MARK	FIXTURE TYPE
J	4' ENCLOSED FLUORESCENT LIGHTING, LITHONIA, CAT. #DM232AR120CWSTSL

FIELD BOOK:		
SURVEYED:		
SURVEY BASE MAP:		
DESIGN ENTERED:	F. HAYWOOD	4/2009
DESIGNED	G. PETERS	4/2009
CHECKED:	R. STEEL	4/2009
SUPERVISOR:	G. PETERS	01/2010

NUM.	REVISION	BY	DATE

JOHN G. SCHALLERT, STATE OF WASHINGTON, 45684, REGISTERED PROFESSIONAL ENGINEER

HNTB

FED. AID No.

PROJECT No. 300197

SURVEY No. 32-24-4-22

MAINTENANCE DIVISION No. 3

KING COUNTY DEPT. OF TRANSPORTATION

HAROLD TANIGUCHI, DIRECTOR

SOUTH PARK BRIDGE #3179 REPLACEMENT

FOOTING LEVEL LIGHTING PLAN

King County

BE12

SHEET 617 OF 667 SHEETS

316-63 (____)

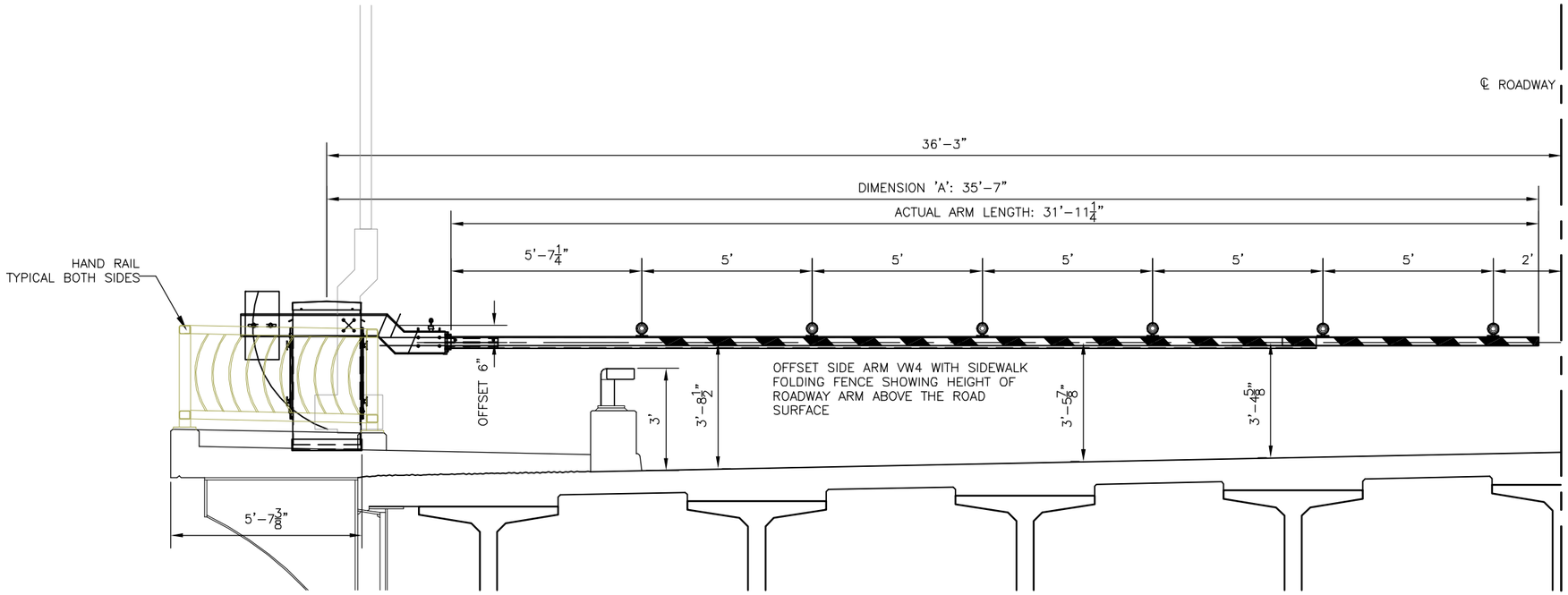

TRAFFIC GATE ELEVATION

1' 0' 2' 4'

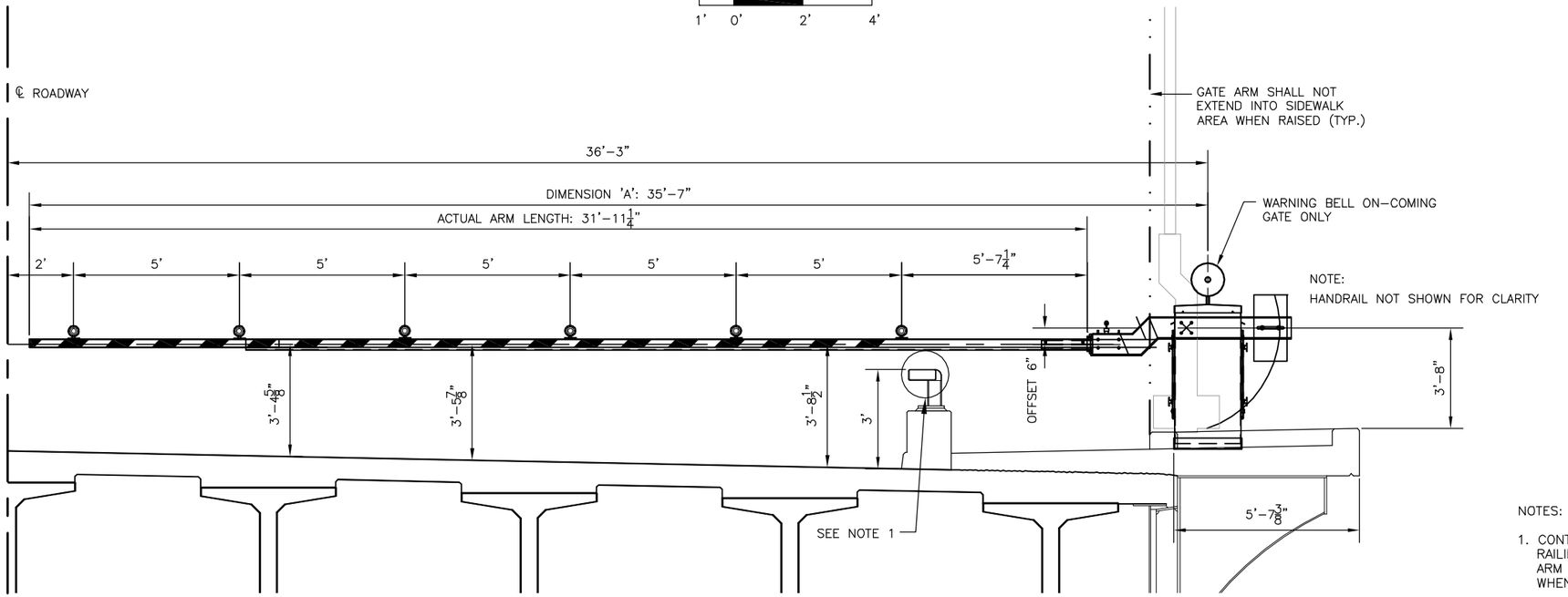

TRAFFIC GATE ELEVATION

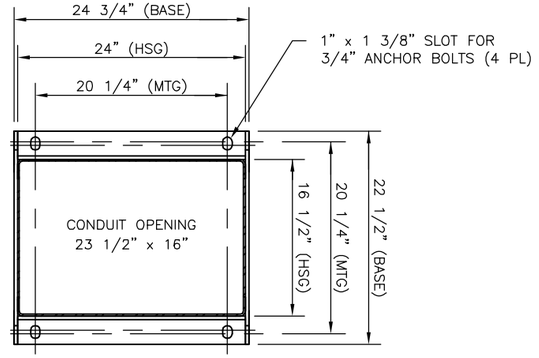

MOUNTING DIMENSIONS

NOTES:

1. CONTRACTOR SHALL COORDINATE WITH RAILING FABRICATOR TO INSURE GATE ARM SHALL NOT CONTACT RAILING TOP WHEN LOWERED.

FIELD BOOK:				
SURVEYED:				
SURVEY BASE MAP:				
DESIGN ENTERED:	F. HAYWOOD	12/2008		
DESIGNED	G. PETERS	12/2008		
CHECKED:	R. STEEL	11/2009		
SUPERVISOR:	G. PETERS	01/2010		

NUM.	REVISION	BY	DATE

JOHN G. SCHALLERT — STATE OF WASHINGTON — 46004 — REGISTERED PROFESSIONAL ENGINEER

HNTB

FED. AID No. _____

PROJECT No. 300197

SURVEY No. 32–24–4–22

MAINTENANCE DIVISION No. 3

KING COUNTY DEPT. OF TRANSPORTATION
HAROLD TANIGUCHI, DIRECTOR

SOUTH PARK BRIDGE #3179 REPLACEMENT

TRAFFIC GATE DETAILS

King County

BE13

SHEET 618 OF 667 SHEETS

316–63 (___)

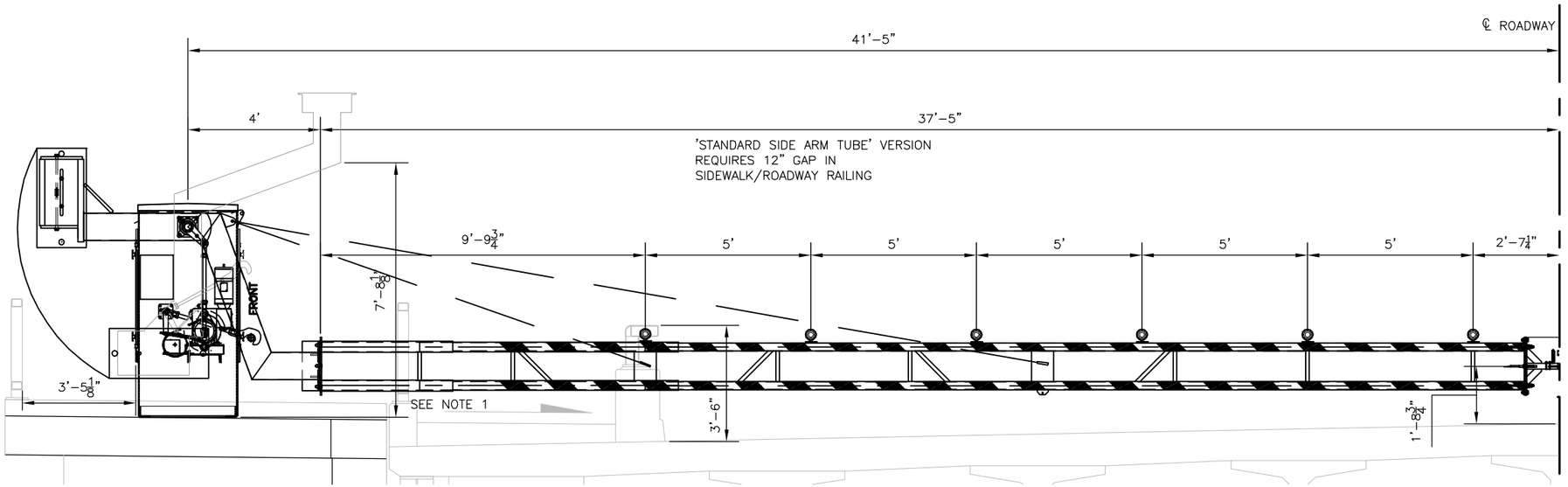

RESISTANCE GATE ELEVATION

1' 0' 2' 4'

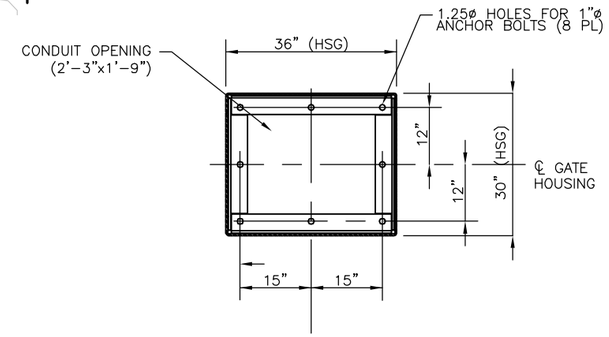

MOUNTING DIMENSIONS

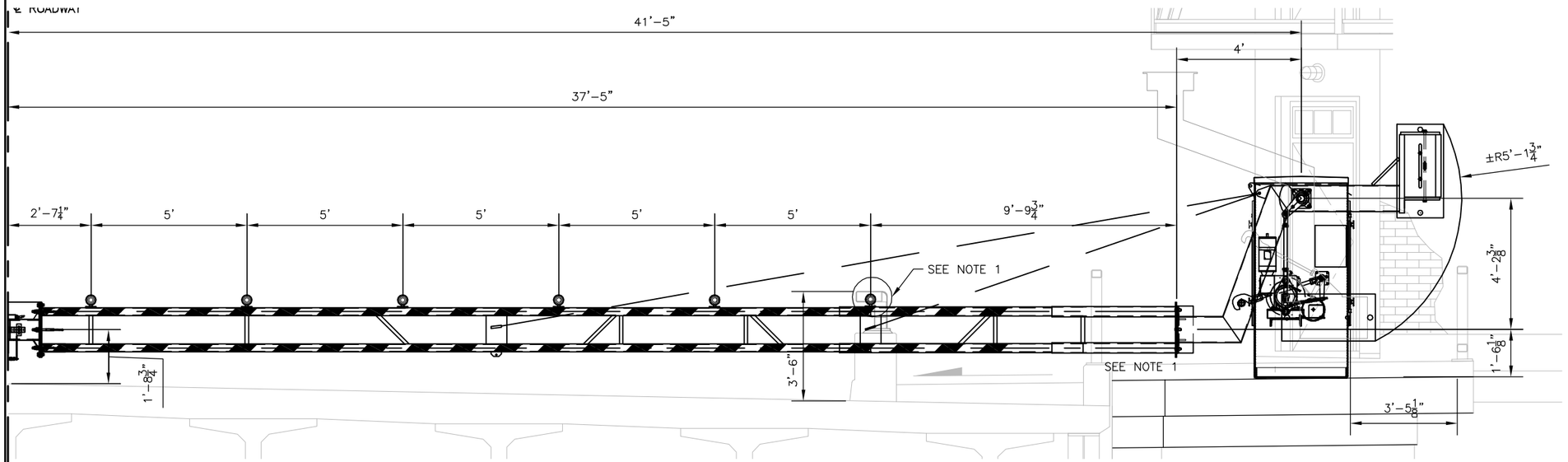

RESISTANCE GATE ELEVATION

NOTES:

1. RAILING SHALL BE SLOTTED TO RECEIVE BARRIER ARM WHEN LOWERED. SEE SHEET BP04.

FIELD BOOK:		
SURVEYED:		
SURVEY BASE MAP:		
DESIGN ENTERED:	F. HAYWOOD	12/2008
DESIGNED	G. PETERS	12/2008
CHECKED:	R. STEEL	11/2009
SUPERVISOR:	G. PETERS	01/2010

NUM.	REVISION	BY	DATE

JOHN G. SCHALLERT, STATE OF WASHINGTON, 45684, REGISTERED PROFESSIONAL ENGINEER

HNTB

FED. AID No.

PROJECT No. 300197

SURVEY No. 32-24-4-22

MAINTENANCE DIVISION No. 3

KING COUNTY DEPT. OF TRANSPORTATION

HAROLD TANIGUCHI, DIRECTOR

SOUTH PARK BRIDGE #3179 REPLACEMENT

RESISTANCE GATE DETAILS

King County

BE14

SHEET 619 OF 667 SHEETS

316-63 (____)

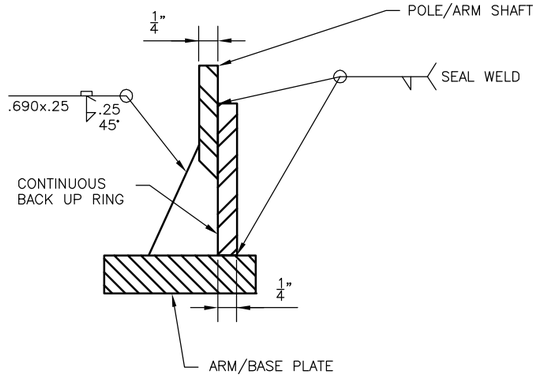

BASE PLATE WELD DETAILS

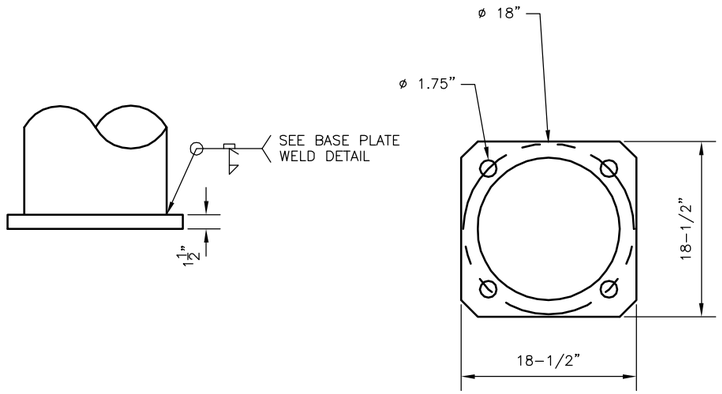

POLE BASE DETAILS

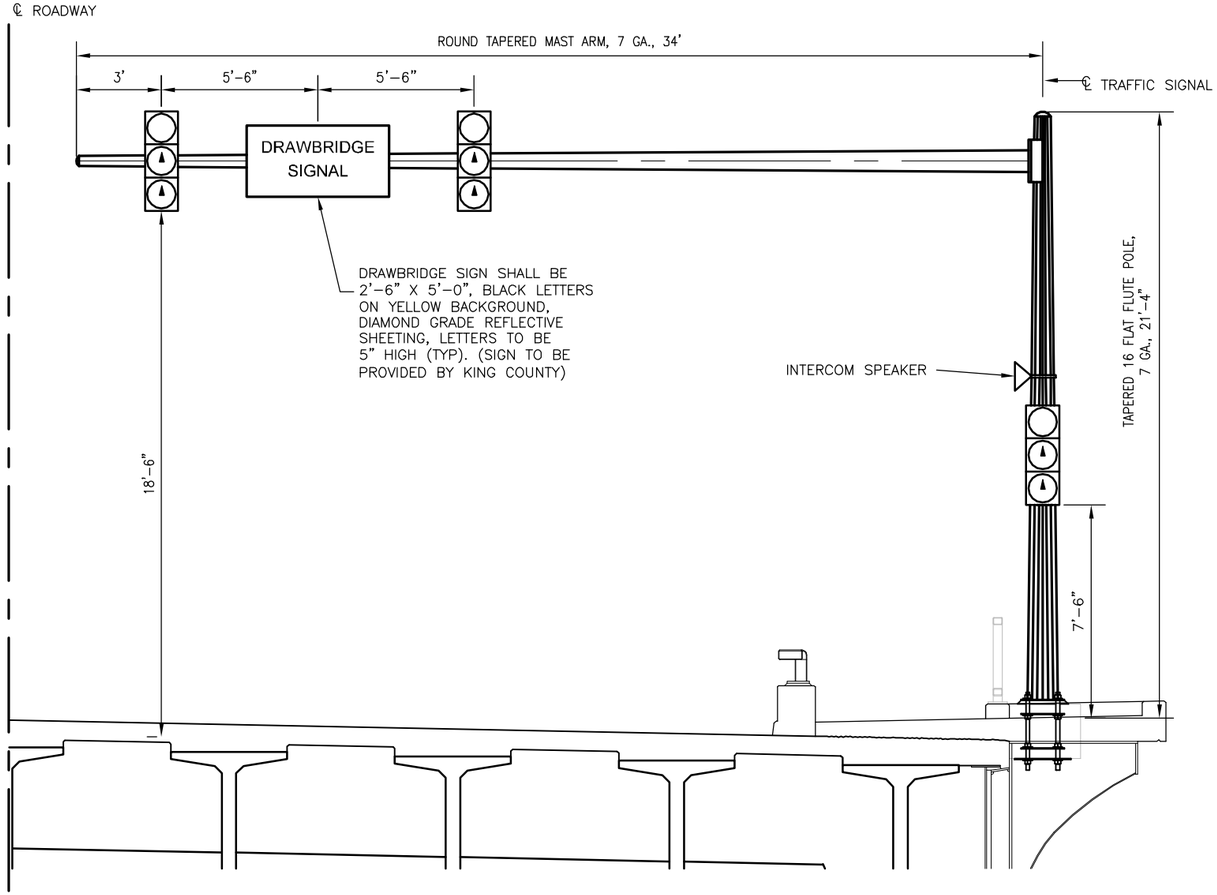

TRAFFIC SIGNAL DETAIL

1' 0' 2' 4'

NOTES:

1. SEE SHEET AS59 FOR FURTHER DETAILS OF POLE BLISTER.
2. COORDINATE TRAFFIC SIGNAL POLE TO MATCH ROADWAY ILLUMINATION POLES.

FIELD BOOK:		
SURVEYED:		
SURVEY BASE MAP:		
DESIGN ENTERED:	F. HAYWOOD	12/2008
DESIGNED	G. PETERS	12/2008
CHECKED:	R. STEEL	11/2009
SUPERVISOR:	G. PETERS	01/2010

NUM.	REVISION	BY	DATE

JOHN G. SCHALLERT, STATE OF WASHINGTON, 45684, REGISTERED PROFESSIONAL ENGINEER

HNTB

FED. AID No.

PROJECT No. 300197

SURVEY No. 32-24-4-22

MAINTENANCE DIVISION No. 3

KING COUNTY DEPT. OF TRANSPORTATION
HAROLD TANIGUCHI, DIRECTOR

SOUTH PARK BRIDGE #3179 REPLACEMENT

TRAFFIC SIGNAL DETAILS

King County

BE15

SHEET 620 OF 667 SHEETS

316-63 (____)

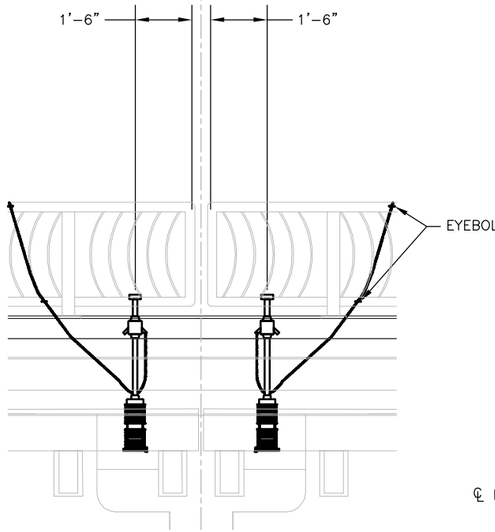

CENTER CHANNEL NAVIGATION LIGHT DETAIL

1' 0' 1' 2'

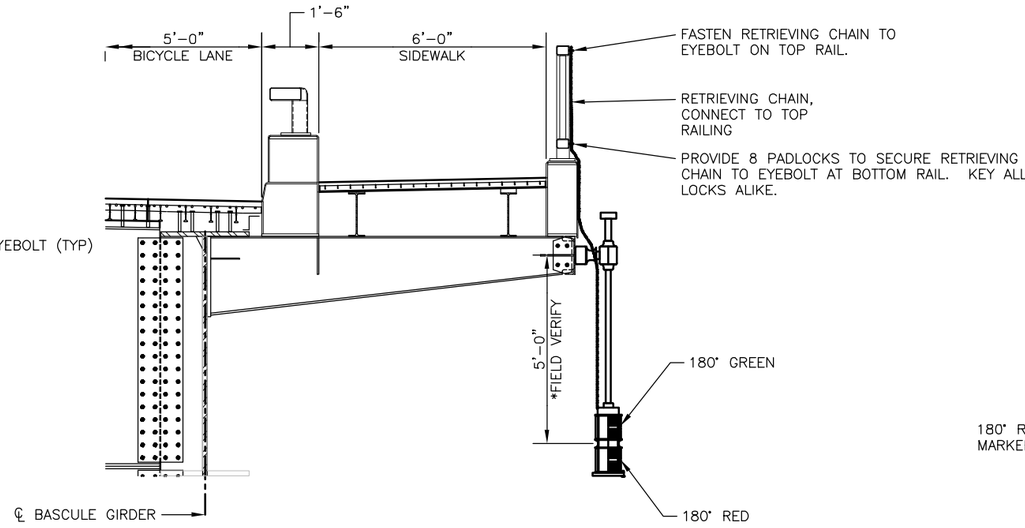

END VIEW

1' 0' 1' 2'

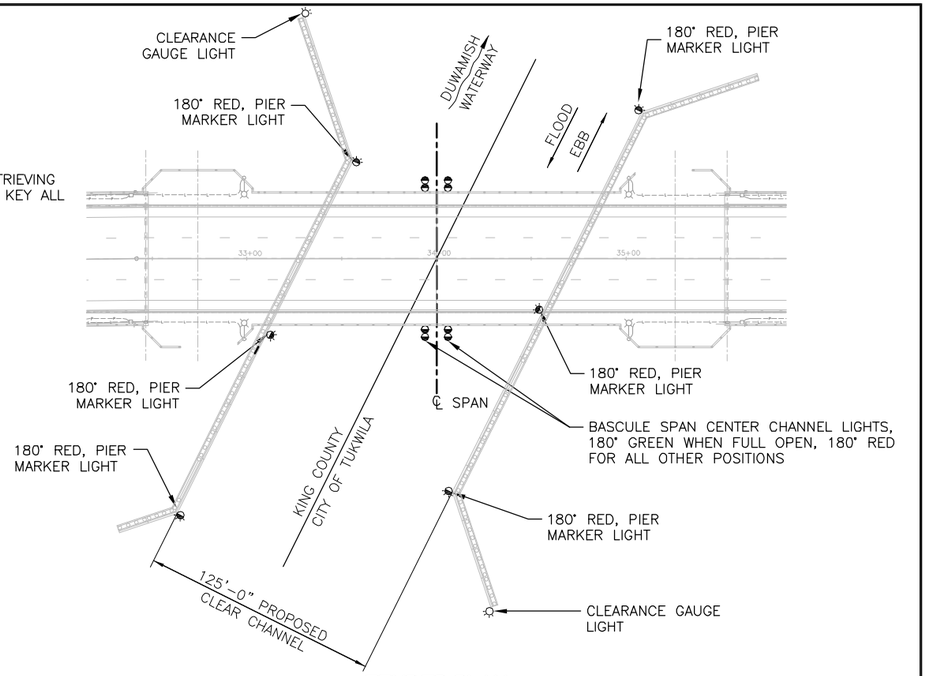

FENDER PLAN

40' 20' 0' 40'

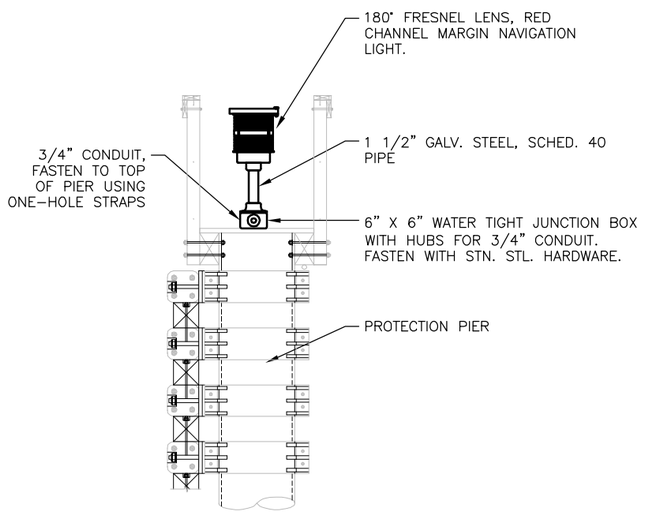

PROTECTION PIER NAVIGATION LIGHT DETAIL

1' 0' 2'

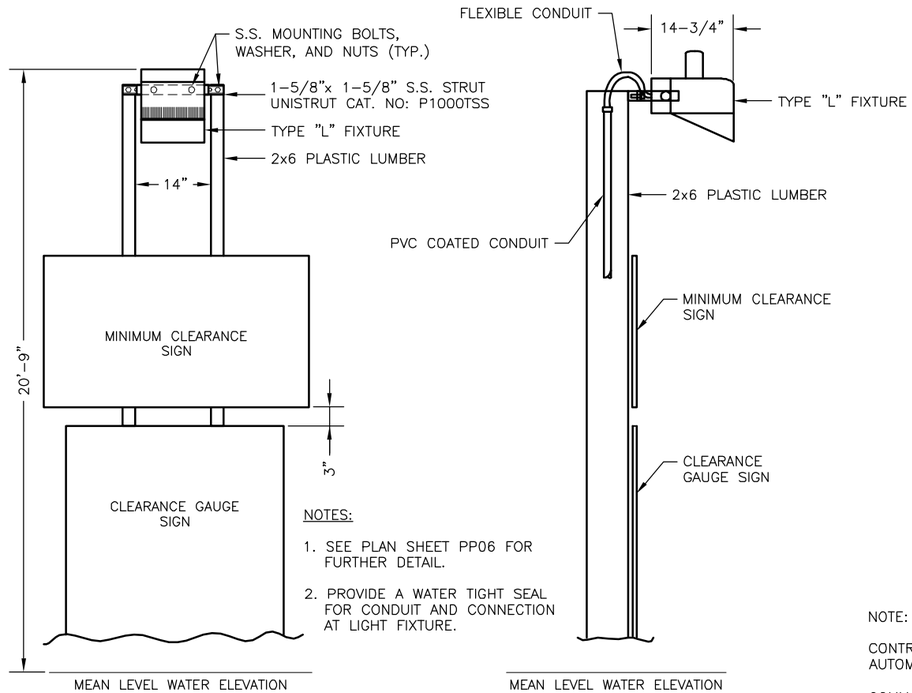

NOTES:

1. SEE PLAN SHEET PP06 FOR FURTHER DETAIL.
2. PROVIDE A WATER TIGHT SEAL FOR CONDUIT AND CONNECTION AT LIGHT FIXTURE.

CLEARANCE GAUGE FIXTURE MOUNTING DETAIL

NTS

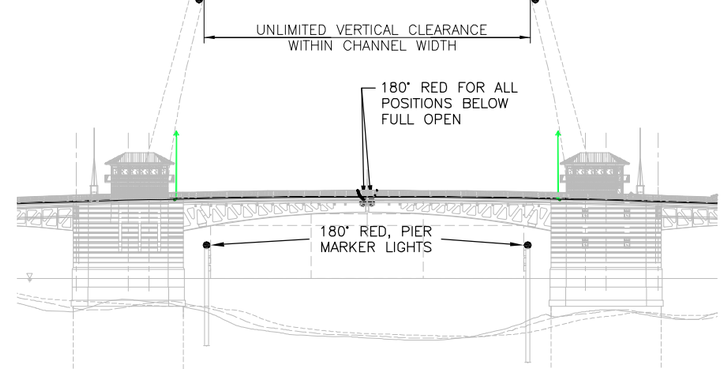

NAVIGATION LIGHTING-ELEVATION VIEW (LOOKING WEST)

40' 20' 0' 40'

NOTE:

CONTRACTOR SHALL NOTIFY THE ENGINEER WHEN THE NAVIGATION LIGHTING SYSTEM IS COMPLETE AND IN AUTOMATIC OPERATION SO THE FOLLOWING PERSON MAY BE NOTIFIED FOR AN IMMEDIATE INSPECTION;

COMMANDER (OB) THIRTEENTH COAST GUARD DISTRICT
FEDERAL BUILDING
915 SECOND AVE.
SEATTLE, WA 98174-1067

FIELD BOOK:					
SURVEYED:					
SURVEY BASE MAP:					
DESIGN ENTERED:	F. HAYWOOD	12/2008			
DESIGNED	G. PETERS	12/2008			
CHECKED:	R. STEEL	11/2009			
SUPERVISOR:	G. PETERS	01/2010	NUM.	REVISION	BY / DATE

JOHN G. SCHALLERT — STATE OF BASIC INSTRUCTOR — REGISTERED PROFESSIONAL ENGINEER

HNTB

FED. AID No.

PROJECT No. 300197

SURVEY No. 32-24-4-22

MAINTENANCE DIVISION No. 3

KING COUNTY DEPT. OF TRANSPORTATION
HAROLD TANIGUCHI, DIRECTOR

SOUTH PARK BRIDGE #3179 REPLACEMENT

NAVIGATION LIGHTING SYSTEM DETAILS

King County

BE16

SHEET 621 OF 667 SHEETS

316-63 (___)

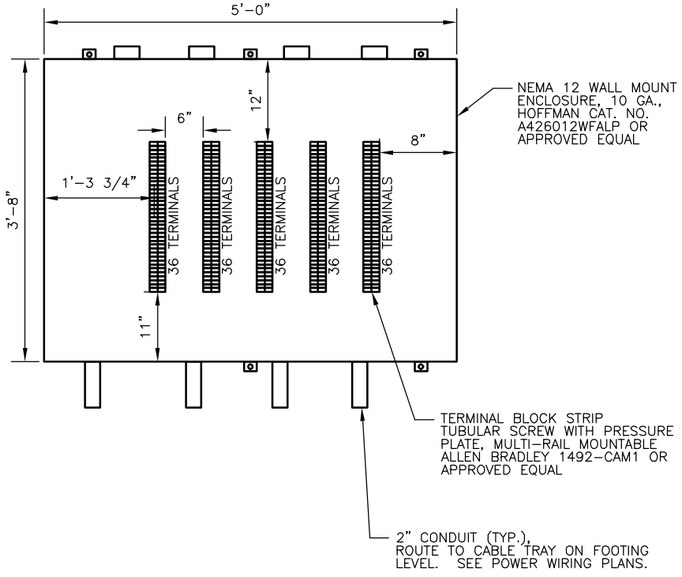

NORTH CROSS CHANNEL CONTROL CABLE TERMINAL CABINET DETAIL

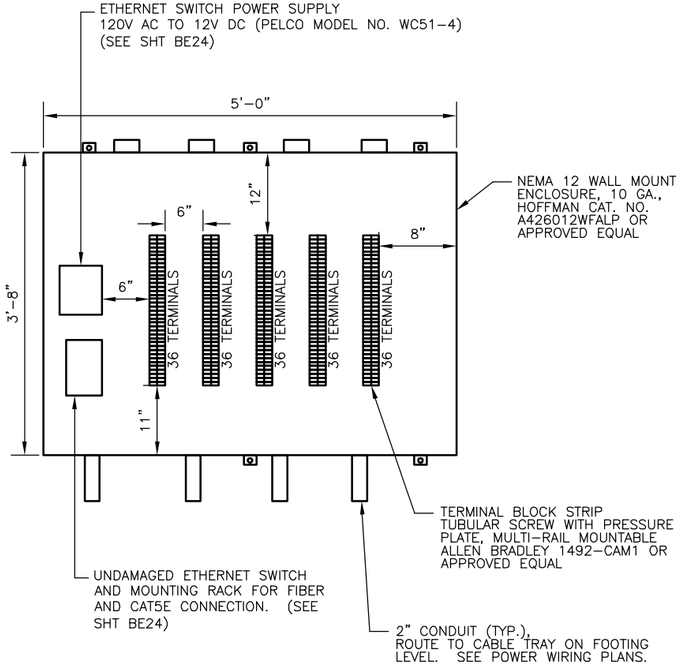

SOUTH CROSS CHANNEL CONTROL CABLE TERMINAL CABINET DETAIL

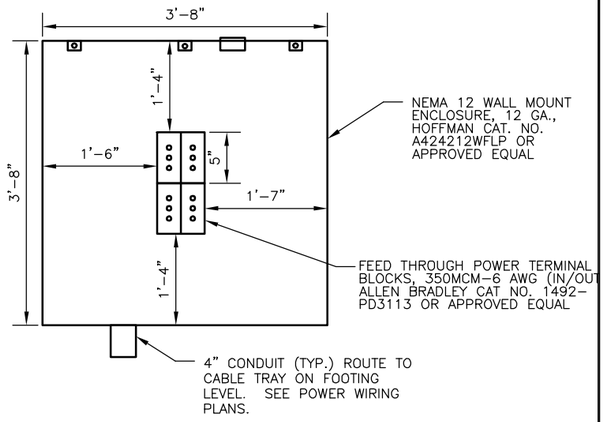

NORTH AND SOUTHCROSS CHANNEL POWER CABLE TERMINAL CABINET DETAIL

CALL 2 WORKING DAYS BEFORE YOU DIG 1-800-424-5555
(UNDERGROUND UTILITY LOCATIONS ARE APPROX.)

FIELD BOOK:						FED. AID No.	KING COUNTY DEPT. OF TRANSPORTATION HAROLD TANIGUCHI, DIRECTOR SOUTH PARK BRIDGE #3179 REPLACEMENT CROSS CHANNEL CABINET DETAILS	BE17
SURVEYED:						PROJECT No. 300197		SHEET 622 OF 667 SHEETS
SURVEY BASE MAP:						SURVEY No. 32-24-4-22		
DESIGN ENTERED: F. HAYWOOD	10/2009					MAINTENANCE DIVISION No. 3		316-63 (____)
DESIGNED R. STEEL	10/2009							
CHECKED: J. SCHALLERT	11/2009							
SUPERVISOR: G. PETERS	01/2010	NUM.	REVISION	BY	DATE			

JOHN G. SCHALLERT STATE OF WASHINGTON 45094 REGISTERED PROFESSIONAL ENGINEER

HNTB

King County

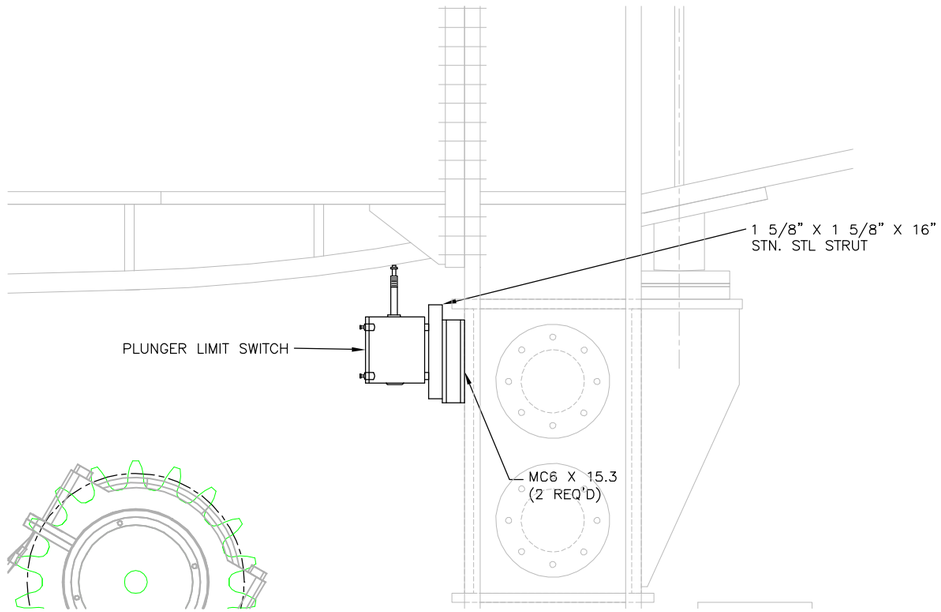

SECTION A-A

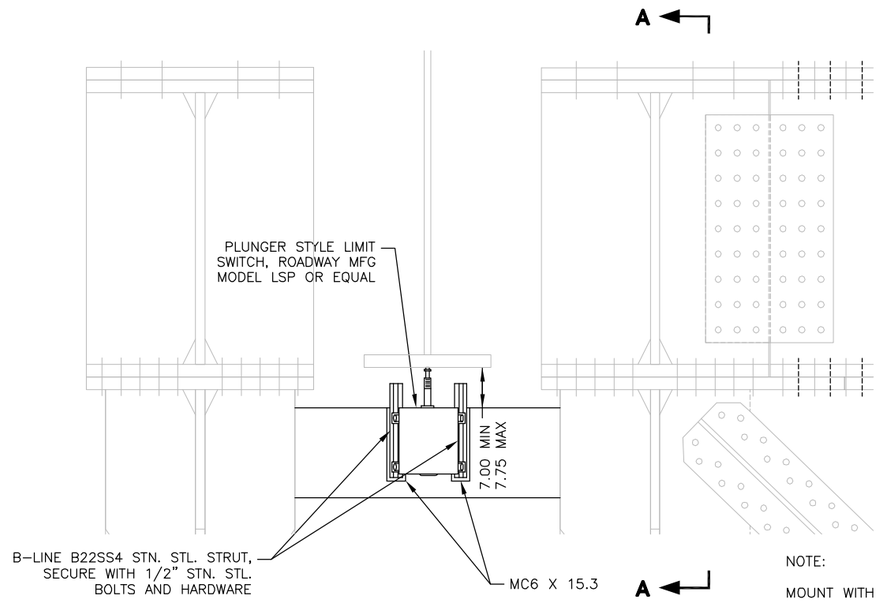

NOTE:

MOUNT WITH STAINLESS STEEL HEX HEAD BOLTS, NUTS, AND HARDWARE.

FULL SEAT LIMIT SWITCH DETAIL
ELEVATION VIEW

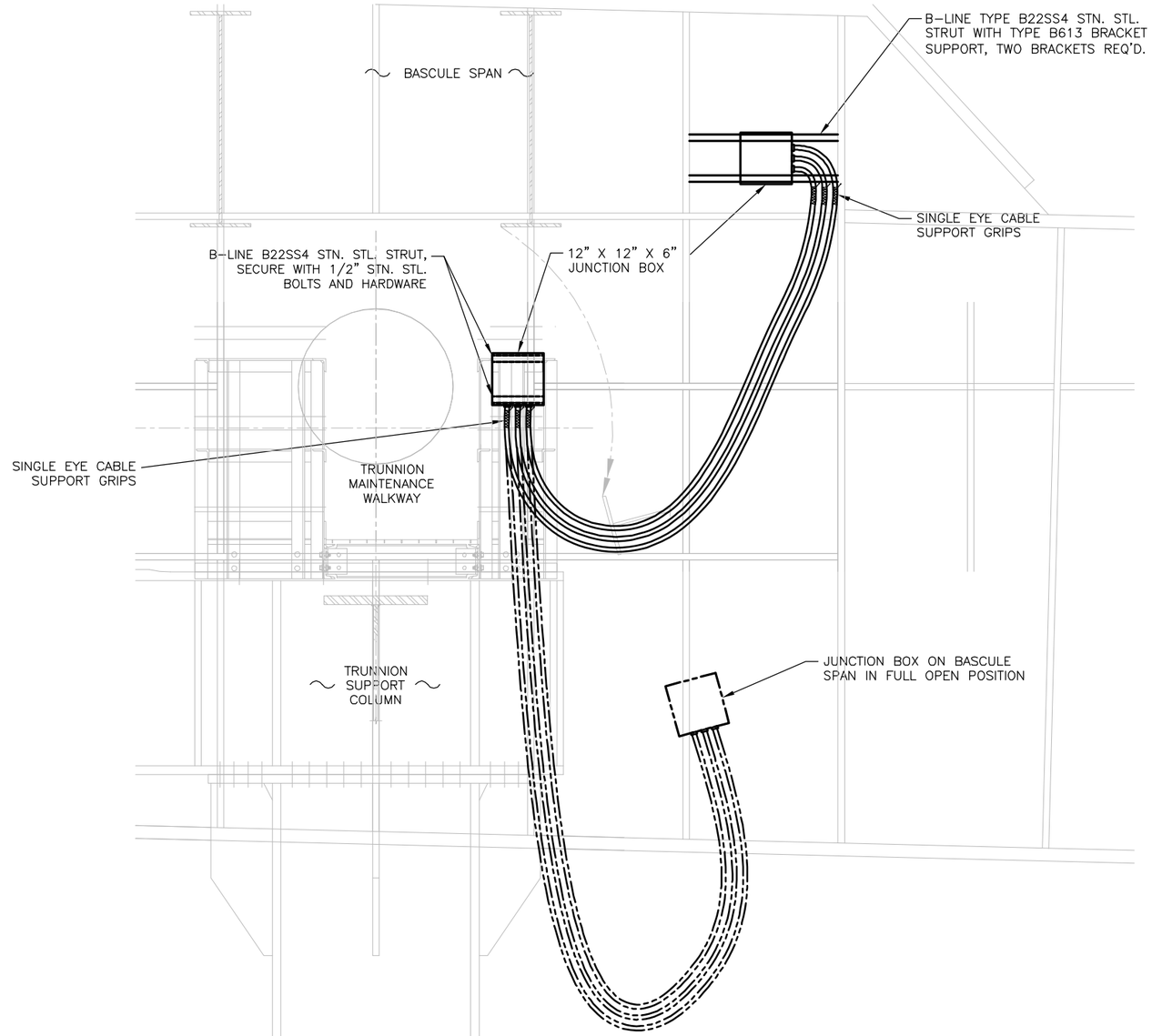

FLEXIBLE CABLE DETAIL

FIELD BOOK:					
SURVEYED:					
SURVEY BASE MAP:					
DESIGN ENTERED: F. HAYWOOD	11/2009				
DESIGNED G. PETERS	11/2009				
CHECKED: R. STEEL	11/2009				
SUPERVISOR: G. PETERS	01/2010	NUM.	REVISION	BY	DATE

JOHN G. SCHALLER, STATE OF WASHINGTON, REGISTERED PROFESSIONAL ENGINEER

HNTB

FED. AID No.

PROJECT No. 300197

SURVEY No. 32-24-4-22

MAINTENANCE DIVISION No. 3

KING COUNTY DEPT. OF TRANSPORTATION
HAROLD TANIGUCHI, DIRECTOR

SOUTH PARK BRIDGE #3179 REPLACEMENT

LIMIT SWITCH DETAILS-1

King County

BE18

SHEET 623 OF 667 SHEETS

316-63 (___)

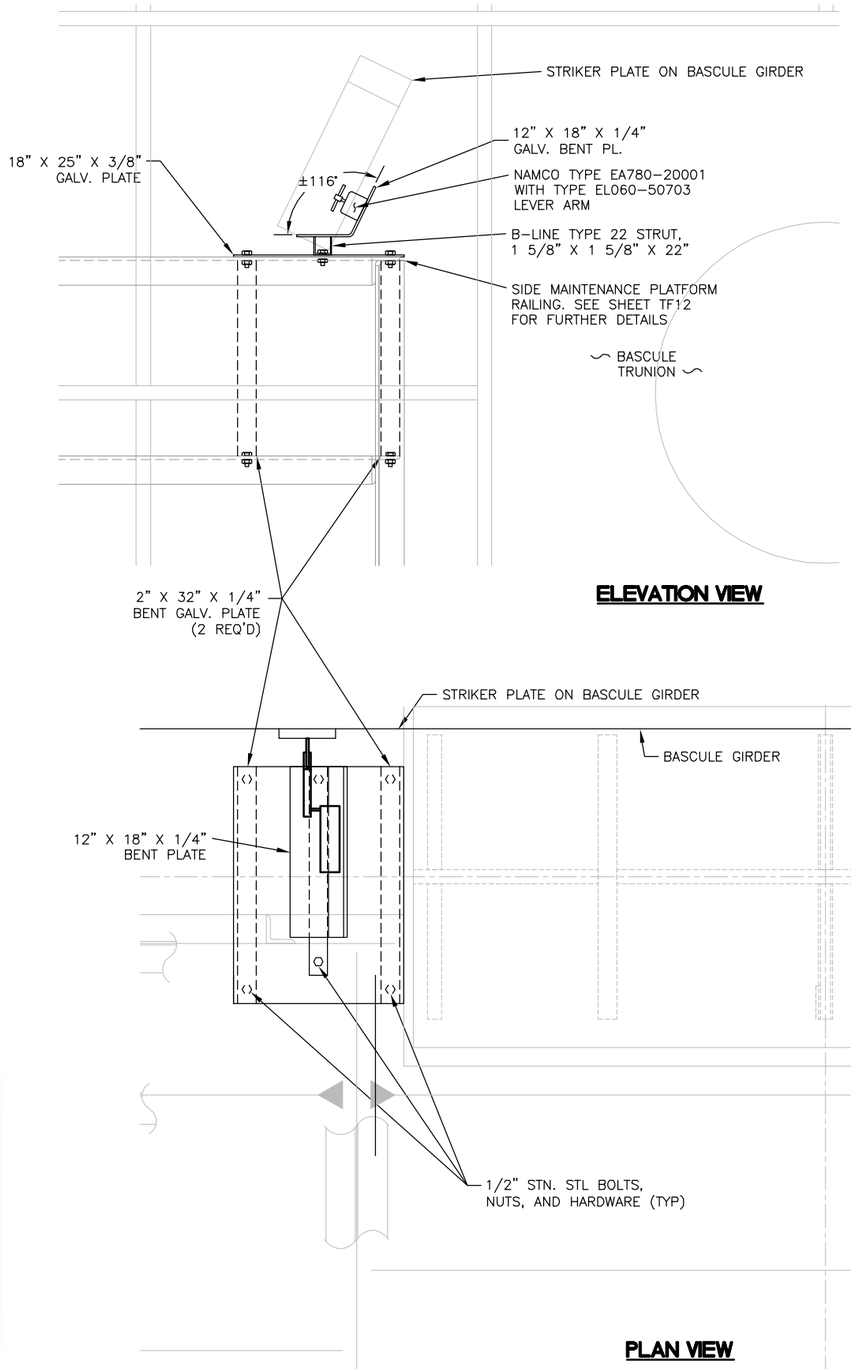

ELEVATION VIEW

PLAN VIEW

LIMIT SWITCH LS-HL1 DETAILS

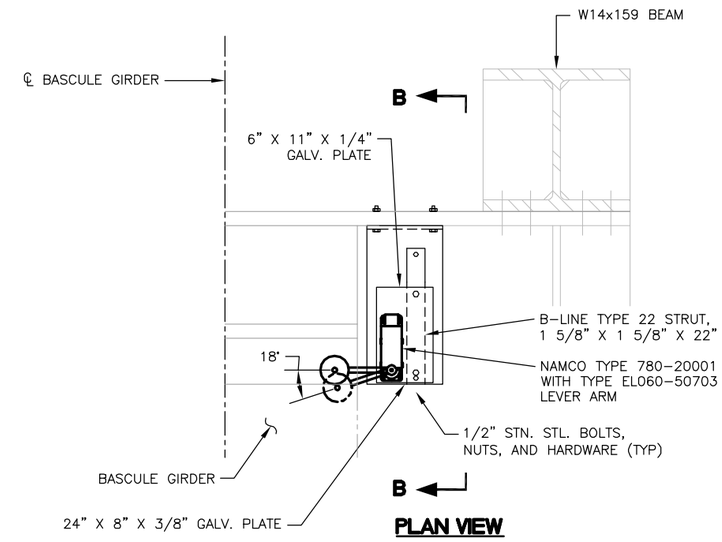

PLAN VIEW

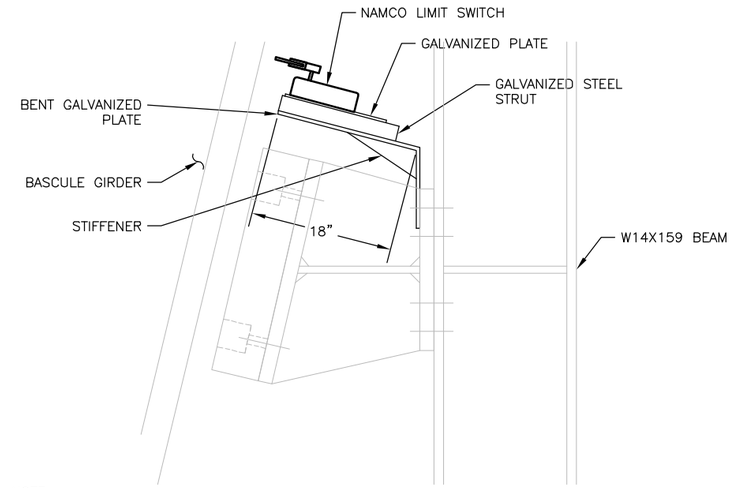

NOTE:

FOR FURTHER DETAILS REFER TO SHEET TF11C.

SECTION B-B

LIMIT SWITCH LS-1 DETAILS

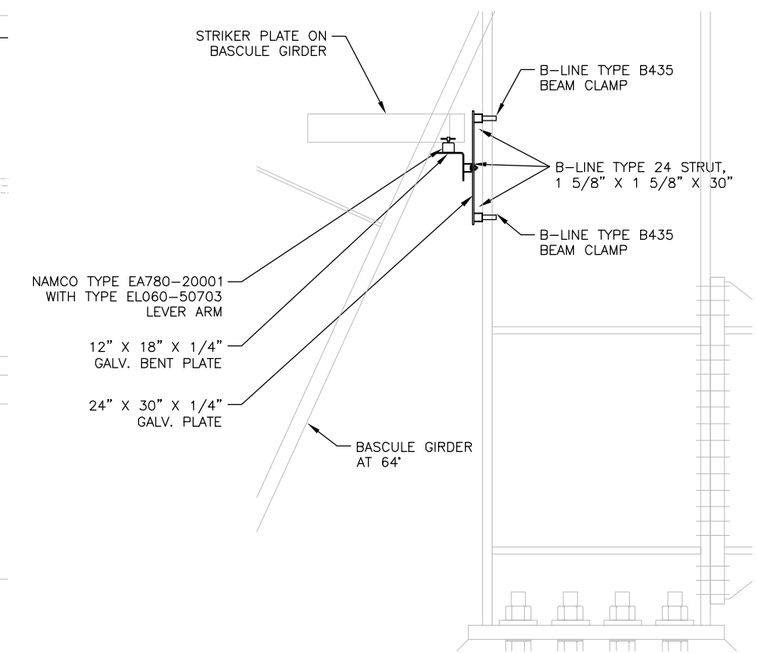

SECTION A-A

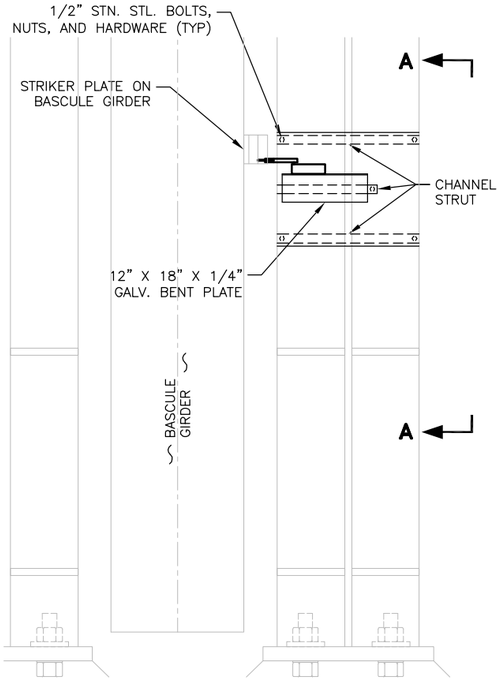

ELEVATION

LIMIT SWITCH LS-HL2 DETAILS

FIELD BOOK:		
SURVEYED:		
SURVEY BASE MAP:		
DESIGN ENTERED:	F. HAYWOOD	11/2009
DESIGNED	G. PETERS	11/2009
CHECKED:	R. STEEL	11/2009
SUPERVISOR:	G. PETERS	01/2010

NUM.	REVISION	BY	DATE

JOHN G. SCHALLERT, STATE OF WASHINGTON, 45684, REGISTERED PROFESSIONAL ENGINEER

HNTB

FED. AID No.

PROJECT No. 300197

SURVEY No. 32-24-4-22

MAINTENANCE DIVISION No. 3

ALL SHEETS OF THESE PLANS SHALL BE DEEMED APPROVED BY THE SIGNATURE AND STAMP ON COVER SHEET.

KING COUNTY DEPT. OF TRANSPORTATION

HAROLD TANIGUCHI, DIRECTOR

SOUTH PARK BRIDGE #3179 REPLACEMENT

LIMIT SWITCH DETAILS-2

King County

BE19

SHEET 624 OF 667 SHEETS

316-63 (____)

LIGHT FIXTURE SCHEDULE

FIXTURE PLAN MARK	FIXTURE TYPE
K	MAINTENANCE WALKWAY LIGHTING, 30W FLUORESCENT LAMP, CROUSE–HINDS, CATALOG # VXHA45GB

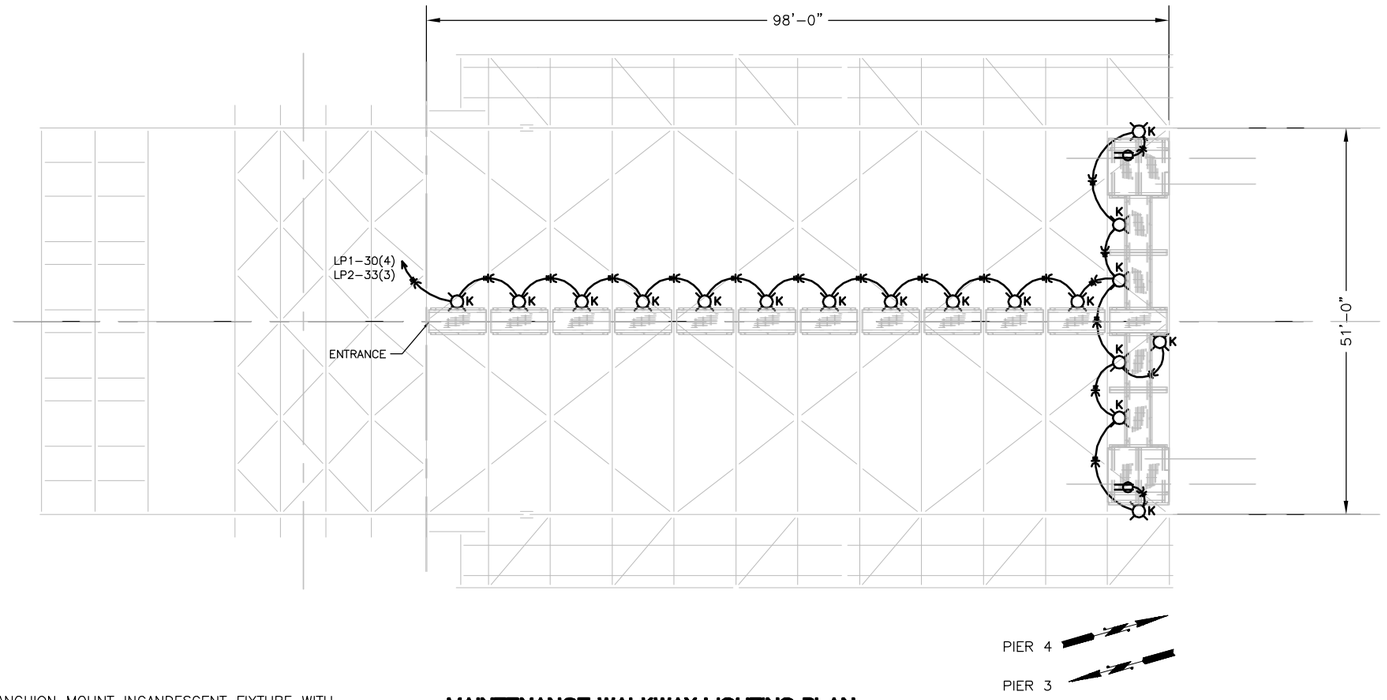

MAINTENANCE WALKWAY LIGHTING PLAN

10' 0' 10' 20'

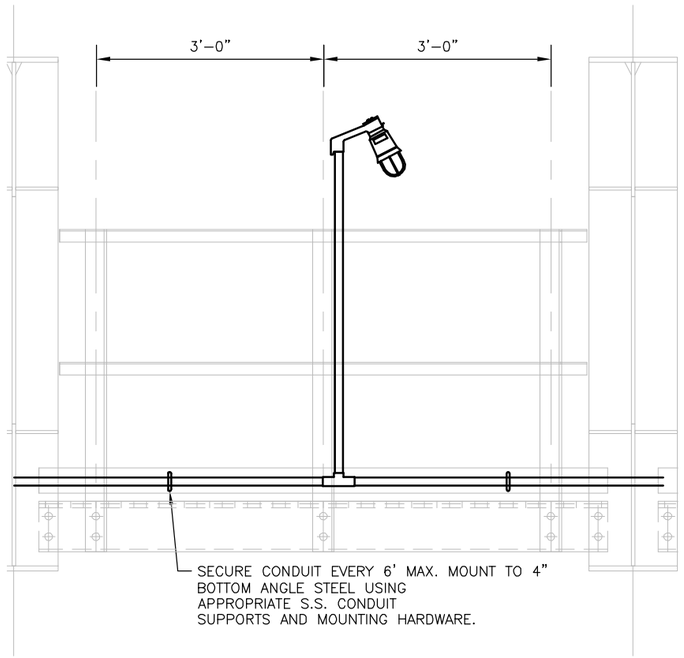

MAINTENANCE LIGHT ELEVATION ALONG WALKWAY

NTS

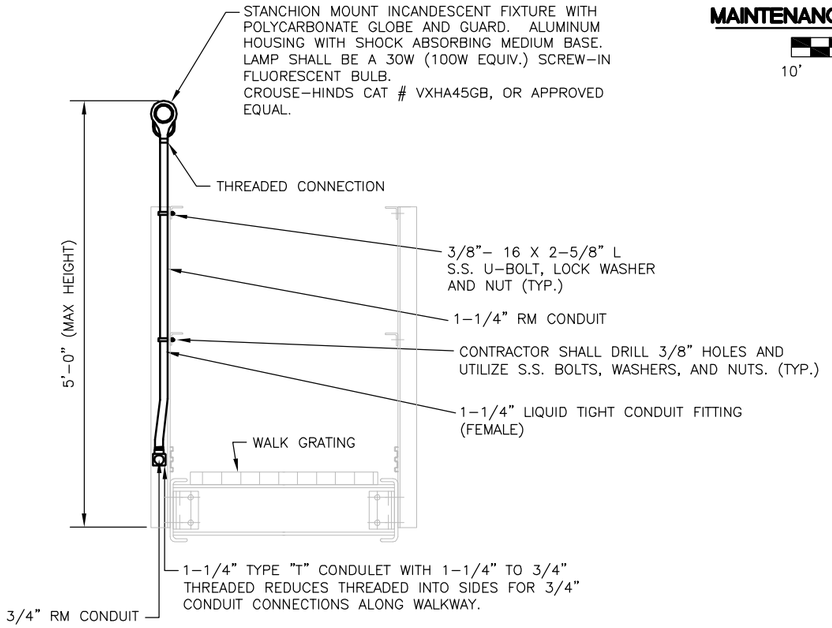

MAINTENANCE LIGHT MOUNTING DETAIL

NTS

FIELD BOOK:					
SURVEYED:					
SURVEY BASE MAP:					
DESIGN ENTERED:	F. HAYWOOD	10/2009			
DESIGNED	G. PETERS	10/2009			
CHECKED:	R. STEEL	11/2009			
SUPERVISOR:	G. PETERS	01/2010	NUM.	REVISION	BY / DATE

JOHN G. SCHALLERT — STATE OF WASHINGTON — 19994 — REGISTERED PROFESSIONAL ENGINEER

HNTB

FED. AID No. _____

PROJECT No. 300197

SURVEY No. 32–24–4–22

MAINTENANCE DIVISION No. 3

KING COUNTY DEPT. OF TRANSPORTATION
HAROLD TANIGUCHI, DIRECTOR

SOUTH PARK BRIDGE #3179 REPLACEMENT

BASCULE SPAN LIGHTING PLAN

King County

BE20

SHEET 625 OF 667 SHEETS

316–63 (____)

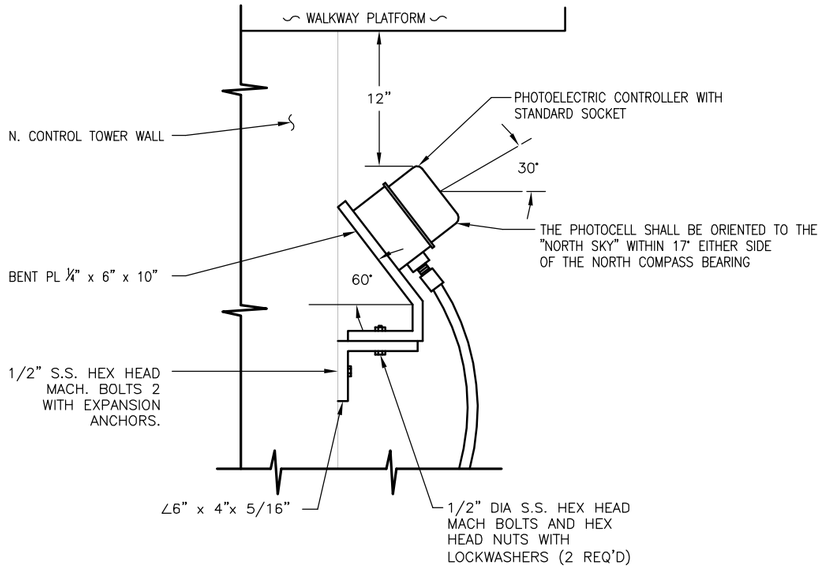

NAVIGATION LIGHT PHOTOCELL
NTS

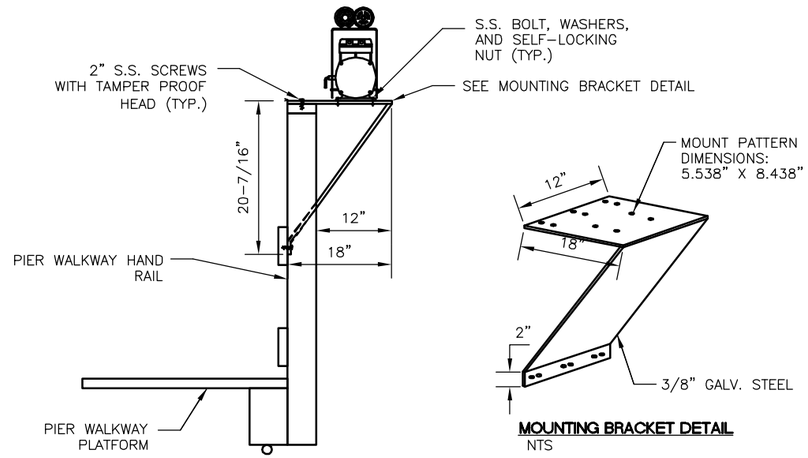

AIR HORN MOUNTING DETAIL
NTS

MOUNTING BRACKET DETAIL
NTS

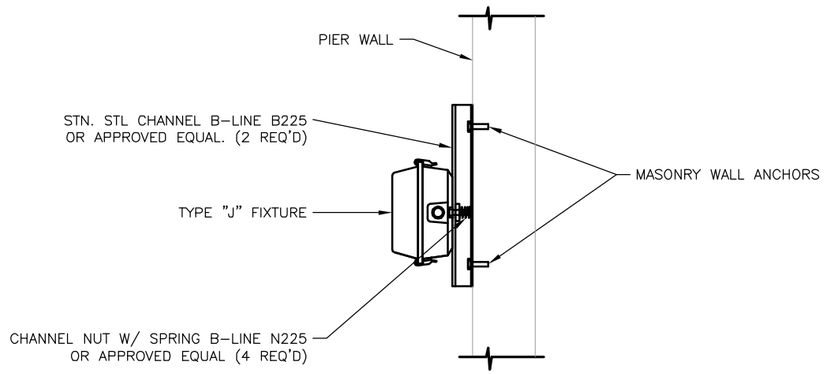

TYPE "J" FIXTURE-WALL MOUNT
NTS

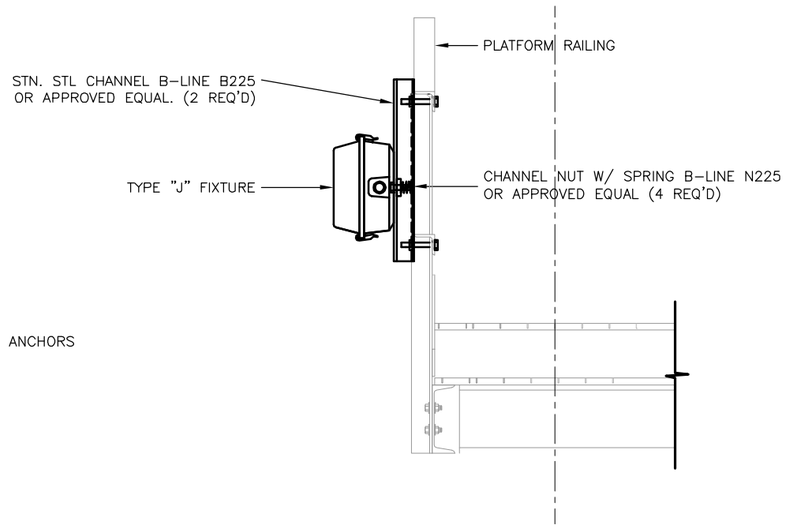

TYPE "J" FIXTURE-PLATFORM RAILING
NTS

FIELD BOOK:		
SURVEYED:		
SURVEY BASE MAP:		
DESIGN ENTERED:	F. HAYWOOD	9/2009
DESIGNED	G. PETERS	9/2009
CHECKED:	R. STEEL	11/2009
SUPERVISOR:	G. PETERS	01/2010

NUM.	REVISION	BY	DATE

JOHN G. SCHALLERT, STATE OF WASHINGTON, 45684, REGISTERED PROFESSIONAL ENGINEER

HNTB

FED. AID No.

PROJECT No. 300197
SURVEY No. 32-24-4-22

MAINTENANCE DIVISION No. 3

KING COUNTY DEPT. OF TRANSPORTATION
HAROLD TANIGUCHI, DIRECTOR

SOUTH PARK BRIDGE #3179 REPLACEMENT

ELECTRICAL DETAILS

King County

BE21

SHEET 626 OF 667 SHEETS

316-63 (____)

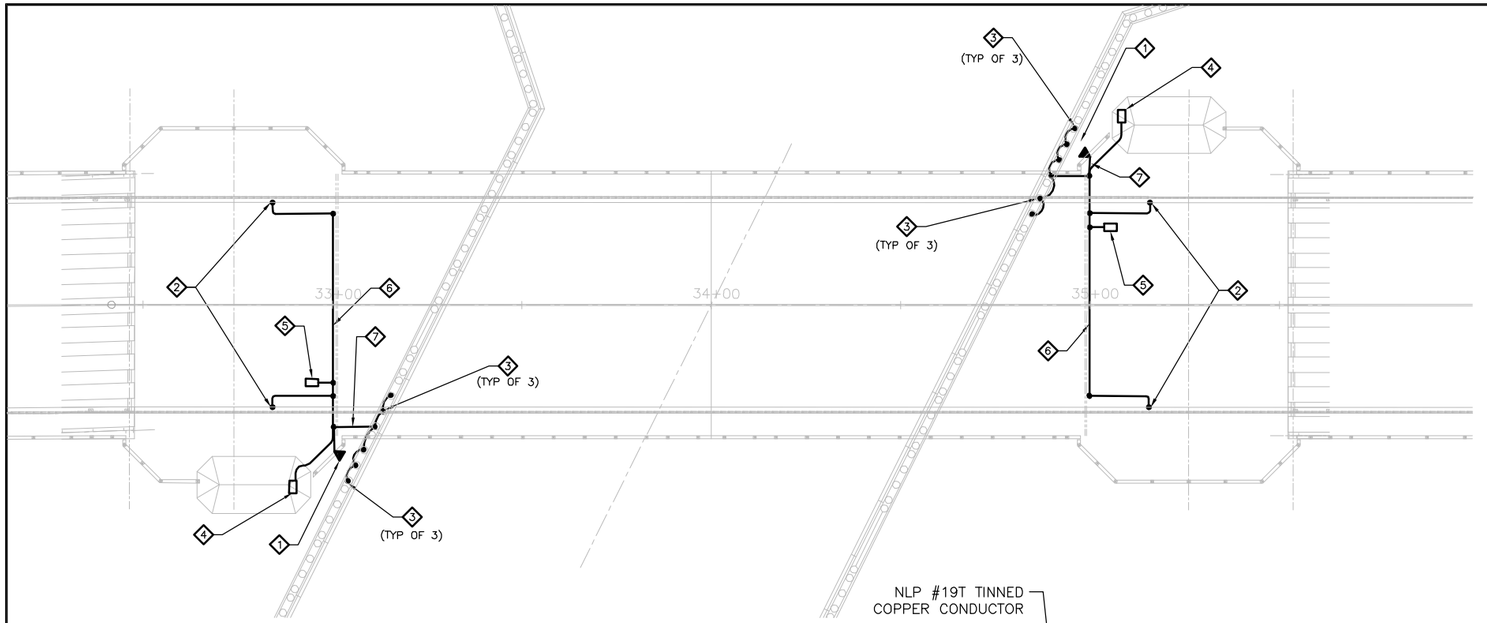

LIGHTNING PROTECTION PLAN

SCALE: 1" = 20'–0"

20' 0' 20' 40'

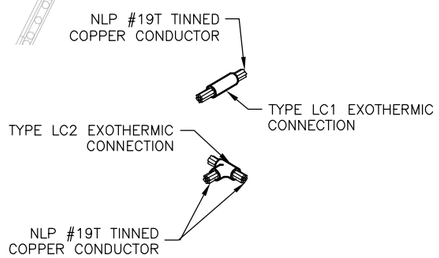

TYPICAL CABLE CONNECTION

NOT TO SCALE

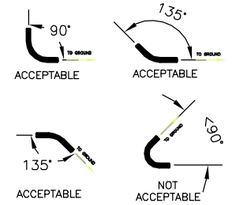

CONDUCTOR BEND REQUIREMENTS

NOT TO SCALE

GENERAL INSTALLATIONS NOTES

1. INSTALLATION SHALL CONFORM TO THESE DRAWINGS. ALL ALTERATIONS SHALL BE APPROVED BY THE DESIGNER BEFORE ALTERATIONS.
2. NO BEND OF CONDUCTOR SHALL FORM A FINAL INCLUDED ANGLE OF LESS THAN 90 DEGREES AND ALL BENDS SHALL HAVE A MINIMUM RADIUS OF 8 INCHES.
3. ALL EXPOSED LIGHTNING PROTECTION CONDUCTORS SHALL BE FASTENED AT A MINIMUM OF EVERY 36 INCHES ON CENTER.
4. THE COMPLETE LIGHTNING PROTECTION GROUND SYSTEM SHALL HAVE NO MORE THAT 10ohms OF RESISTANCE AS MEASURES BY THE IEEE FALL OF POTENTIAL METHOD.
5. THE ELECTRICAL, TELEPHONE, DATA, COMMUNICATIONS, TELEVISION, AND RADIO SERVICES SHALL BE EQUIPPED WITH TRANSIENT VOLTAGE SURGE SUPPRESSION (TVSS). UNLESS SPECIFIED OTHERWISE ALL TVSS SHALL BE FURNISHED AND INSTALLED BY THE RESPECTIVE SYSTEM VENDOR
6. BOND TO ELECTRICAL GROUND, DOMESTIC WATER, AND TELEPHONE GROUND TO MAKE ALL SYSTEMS COMMON.
7. ALL REQUIRED 1" SCH 80 PVC CONDUIT SHALL BE FURNISHED AND INSTALLED BY THE ELECTRICAL CONTRACTOR.
8. CONDUIT SHALL ROUTE CONDUCTOR IN A MANNER CONSISTENT WITH THE BEND REQUIREMENTS OUTLINED ABOVE.
9. SEE 'UTILITY' PLANS FOR FURTHER DETAILS ON, ELECTRICAL GROUND, TELEPHONE GROUND AND DOMESTIC WATER LINES. COORDINATE WITH INDIVIDUAL UTILITY AS REQUIRED.

KEYED NOTES

1. E.A.S.E. AIR TERMINAL MOUNTED ON LIGHT POLES 12&13. COORDINATE WITH VALMONT INDUSTRIES AND NATIONAL LIGHTNING PROTECTION.
2. FLEXIBLE BONDING STRAP BONDED TO BASCUE SPAN AND CONNECTED TO FENDER PIPE GROUND SYSTEM WITH NLP #19T TINNED COPPER CONDUCTOR.
3. EXOTHERMIC CONNECTION TO FENDER PILE CASING AS NEAR TO TOP OF PIPE AS POSSIBLE
4. NLP UNIB14412 GROUND BAR FOR POTENTIAL EQUALIZATION ON EQUIPMENT LEVEL.
5. NLP UNIB14412 GROUND BAR FOR POTENTIAL EQUALIZATION ON MACHINE LEVEL
6. NLP #19T TINNED COPPER CONDUCTOR IN 1" PVC CONDUIT ON MACHINE LEVEL.
7. NLP #19T TINNED COPPER CONDUCTOR RUN ON FENDER ACCESS WALKWAY FOR ATTACHMENT TO FENDER GROUND SYSTEM.

▲ NLP US–1243–P4 PREVECTRON ELECTRONICALLY ACTIVATED STREAMER EMISSION (E.A.S.E.) AIR TERMINAL MOUNTED ON LIGHT POLE

● LIGHTNING PROTECTION SYSTEM CONNECTION

NLP #19T TINNED COPPER LIGHTNING PROTECTION CONDUCTOR.

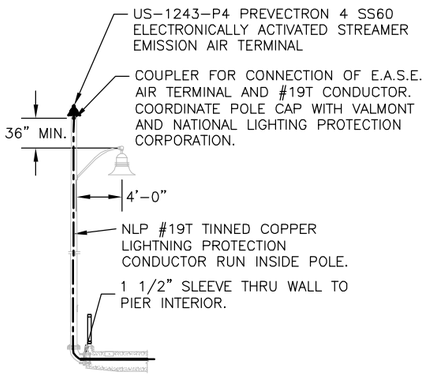

LIGHTNING PROTECTION MAST

NOT TO SCALE

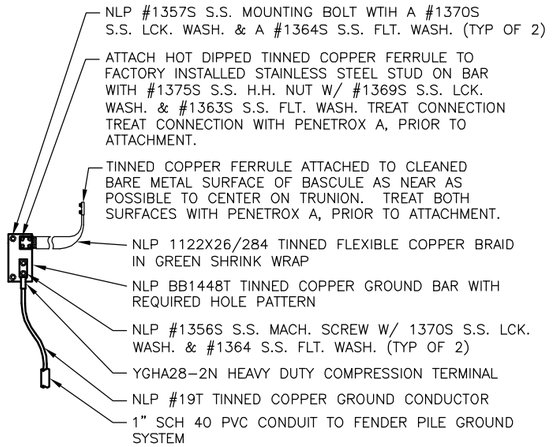

BASCULE BOND CONNECTION

NOT TO SCALE

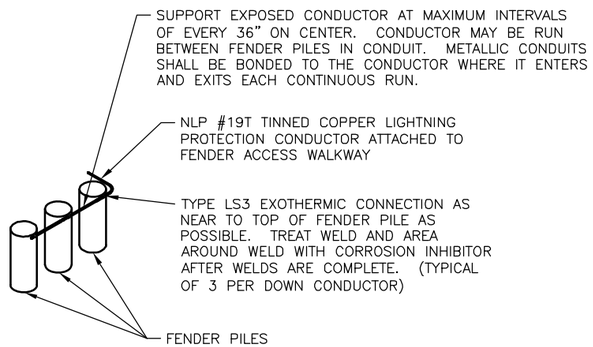

FENDER PILE GROUND

NOT TO SCALE

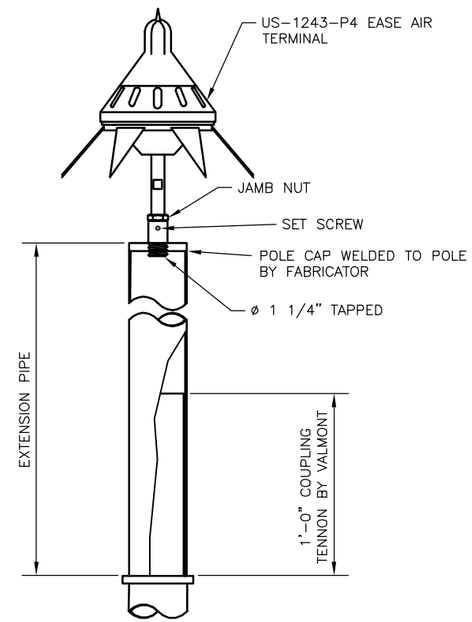

MAST EXTENSION DETAIL

NOT TO SCALE

FIELD BOOK:								
SURVEYED:								
SURVEY BASE MAP:								
DESIGN ENTERED:	F. HAYWOOD	9/2009						
DESIGNED	G. PETERS	9/2009						
CHECKED:	R. STEEL	11/2009						
SUPERVISOR:	G. PETERS	01/2010	NUM.	REVISION	BY	DATE		

JOHN G. SCHALLER, STATE OF WASHINGTON, 46004, REGISTERED PROFESSIONAL ENGINEER

HNTB

FED. AID No.

PROJECT No. 300197

SURVEY No. 32–24–4–22

MAINTENANCE DIVISION No. 3

KING COUNTY DEPT. OF TRANSPORTATION

HAROLD TANIGUCHI, DIRECTOR

SOUTH PARK BRIDGE #3179 REPLACEMENT

LIGHTNING PROTECTION AND GROUNDING DETAILS

King County

BE22

SHEET 627 OF 667 SHEETS

316–63 (___)

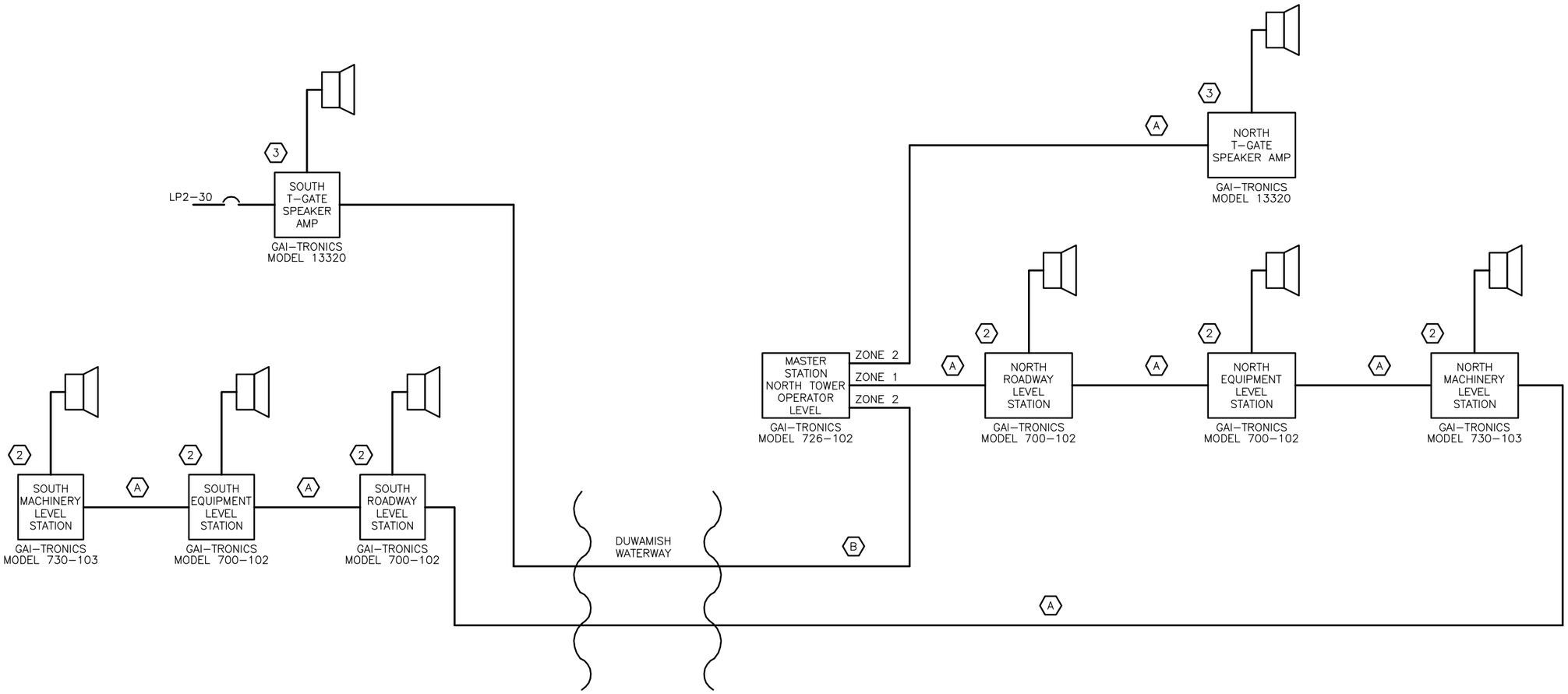

(A) – SPECIAL 8-CONDUCTOR CABLE BY INTERCOM SYSTEM MANUFACTURER.

(B) – #16AWG TWISTED SHIELDED PAIR CABLE.

ZONE 1 – SINGLE LINE PAGE/PARTY INTERCOM LINE

ZONE 2 – ONE WAY COMMUNICATION LINE TO TRAFFIC GATE AREAS

NOTES:

1. ROUTE ALL CONDUCTORS IN 3/4" MINIMUM CONDUIT AS REQUIRED. CABLE TRAY CAN BE USED WHERE APPLICABLE.
2. ROUTE CONDUCTOR ACROSS WATERWAY IN CROSS CHANNEL DUCTS. SEE SHT BE60 FOR DUCT DESIGNATIONS.

(1) DESK STYLE MASTER STATION WITH HANDSET, ZONE CONTROL SELECTOR AND BUILT-IN SPEAKER.

(2) REMOTE INTERCOM STATION WITH HANDSET AND SPEAKER.

(3) REMOTE SPEAKER AMPLIFIER STATION WITH SPEAKER ONLY.

FIELD BOOK:		
SURVEYED:		
SURVEY BASE MAP:		
DESIGN ENTERED:	F. HAYWOOD	9/2009
DESIGNED	G. PETERS	9/2009
CHECKED:	R. STEEL	11/2009
SUPERVISOR:	G. PETERS	01/2010

NUM.	REVISION	BY	DATE

JOHN G. SCHALLERT, STATE OF WASHINGTON, 45684, REGISTERED PROFESSIONAL ENGINEER

HNTB

FED. AID No.

PROJECT No. 300197

SURVEY No. 32-24-4-22

MAINTENANCE DIVISION No. 3

KING COUNTY DEPT. OF TRANSPORTATION

HAROLD TANIGUCHI, DIRECTOR

SOUTH PARK BRIDGE #3179 REPLACEMENT

INTERCOM SYSTEM

King County

BE23

SHEET 628 OF 667 SHEETS

316-63 (____)

SOUTH PARK BRIDGE - IP CAMERA SYSTEM LAYOUT

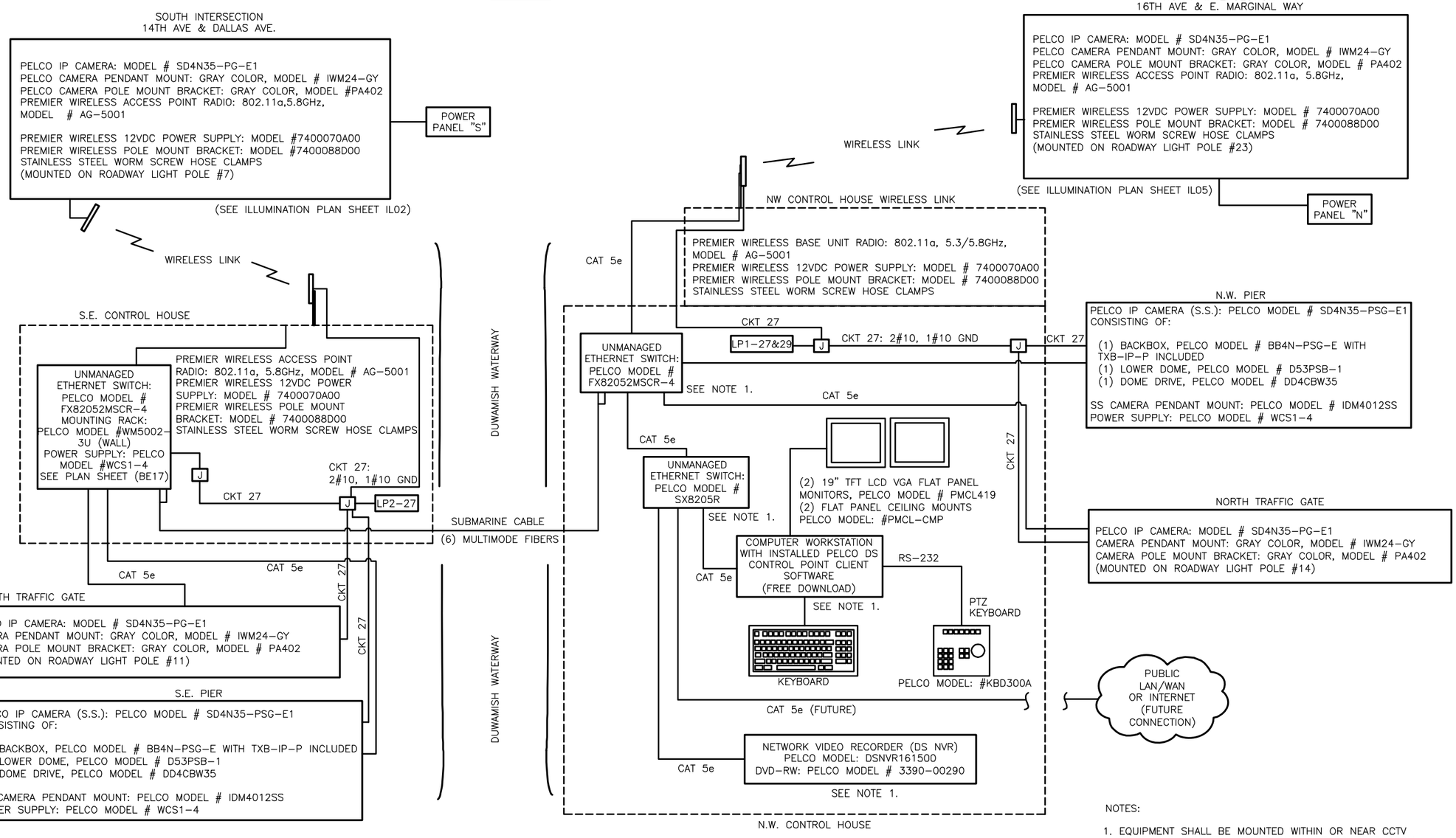

NOTES:

1. EQUIPMENT SHALL BE MOUNTED WITHIN OR NEAR CCTV EQUIPMENT CABINET. POWER SHALL BE POWERED FROM A QUADRAPLEX RECEPTACLE USING CIRCUIT LP1-29.
2. CONTRACTOR SHALL PROVIDE SURGE PROTECTED POWER STRIP RECEPTACLES AS NEEDED FOR A FULLY OPERATIONAL AND POWERED SYSTEM.

FIELD BOOK:					
SURVEYED:					
SURVEY BASE MAP:					
DESIGN ENTERED:	F. HAYWOOD	9/2009			
DESIGNED	R. STEEL	9/2009			
CHECKED:	J. SCHALLERT	11/2009			
SUPERVISOR:	G. PETERS	01/2010	NUM.	REVISION	BY / DATE

JOHN C. SCHALLERT — STATE OF WASHINGTON — 40004 — REGISTERED PROFESSIONAL ENGINEER

HNTB

FED. AID No.

PROJECT No. 300197

SURVEY No. 32-24-4-22

MAINTENANCE DIVISION No. 3

KING COUNTY DEPT. OF TRANSPORTATION
HAROLD TANIGUCHI, DIRECTOR

SOUTH PARK BRIDGE #3179 REPLACEMENT

CLOSED CIRCUIT TELEVISION SYSTEM

King County

BE24

SHEET 629 OF 667 SHEETS

316-63 (___)

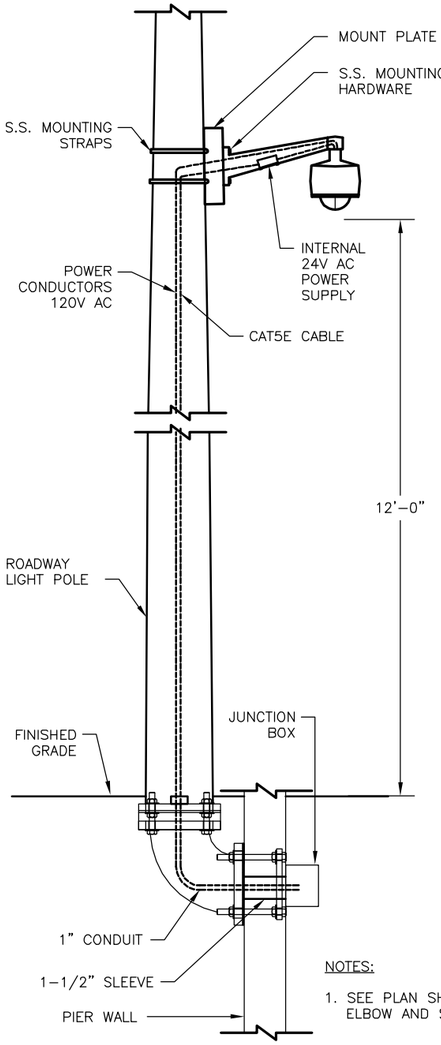

NOTES:

1. SEE PLAN SHEET IL06 FOR ELBOW AND SLEEVE DETAILS.

POLE MOUNT IP CAMERA DETAIL
NTS

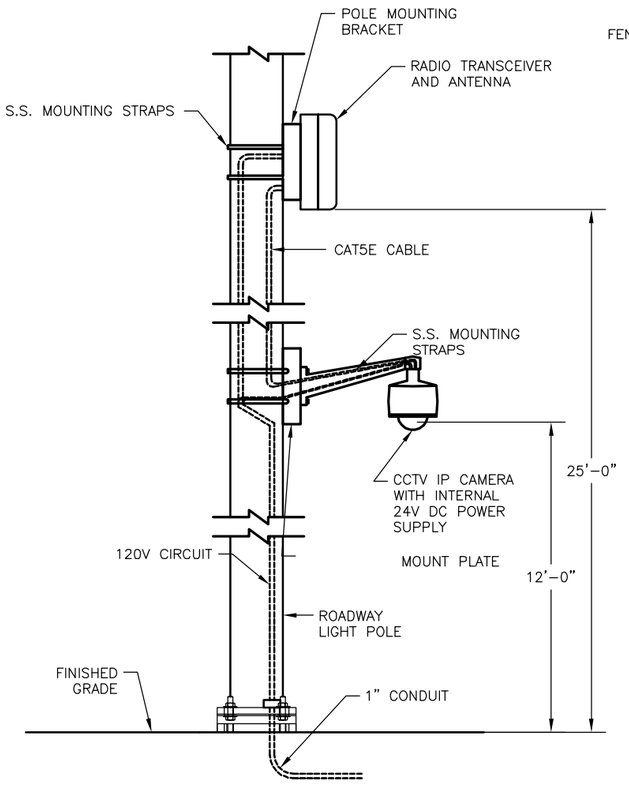

CCTV CAMERA AND RADIO INSTALLATION DETAIL
NTS

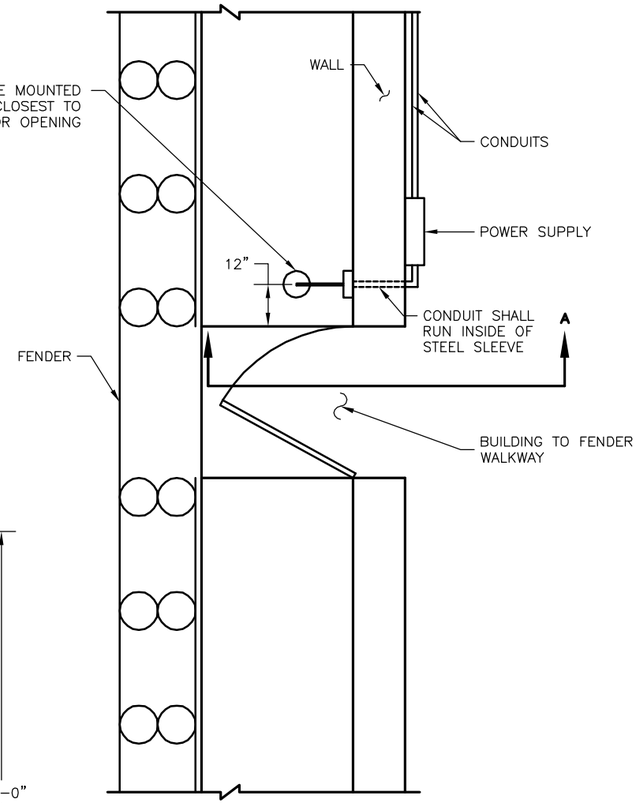

TYPICAL FENDER PIER IP CAMERA MOUNTING DETAIL
NTS

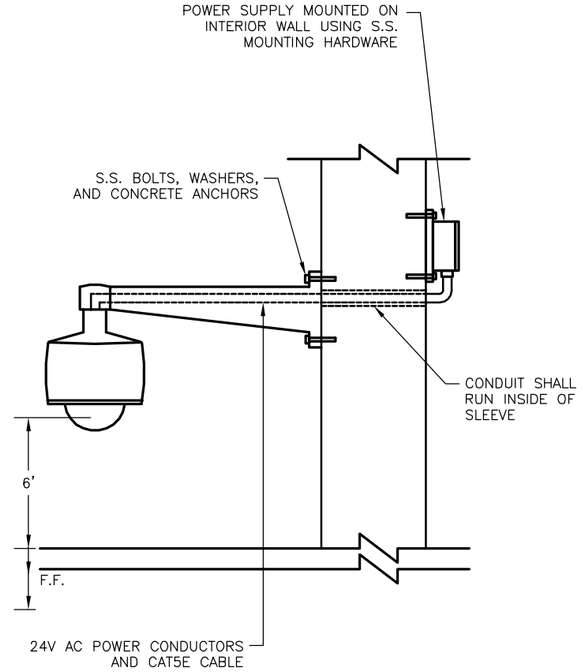

SECTION A
NTS

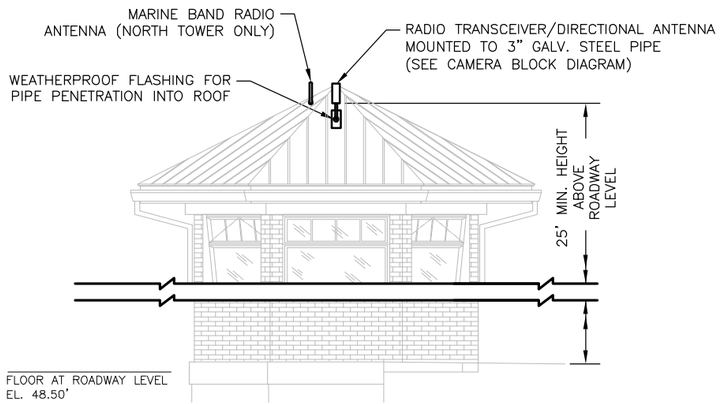

TRANSCEIVER MOUNTING ON NORTH TOWER-NORTH SIDE (SOUTH TOWER-SOUTH SIDE SIMILAR)
NTS

NOTE:

SEE CONTROL TOWER (CT) SHEETS CT20 AND CT23 FOR FURTHER MOUNTING DETAILS.

FIELD BOOK:					
SURVEYED:					
SURVEY BASE MAP:					
DESIGN ENTERED:	F. HAYWOOD	10/2009			
DESIGNED	R. STEEL	10/2009			
CHECKED:	J. SCHALLERT	11/2009			
SUPERVISOR:	G. PETERS	01/2010	NUM.	REVISION	BY / DATE

JOHN G. SCHALLERT — STATE OF WASHINGTON — REGISTERED PROFESSIONAL ENGINEER

HNTB

FED. AID No.

PROJECT No. 300197

SURVEY No. 32-24-4-22

MAINTENANCE DIVISION No. 3

KING COUNTY DEPT. OF TRANSPORTATION
HAROLD TANIGUCHI, DIRECTOR

SOUTH PARK BRIDGE #3179 REPLACEMENT

CLOSED CIRCUIT TELEVISION SYSTEM DETAILS

King County

BE25

SHEET 630 OF 667 SHEETS

316-63 (___)

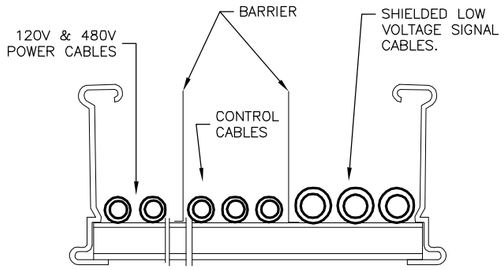

BARRIER STRIP

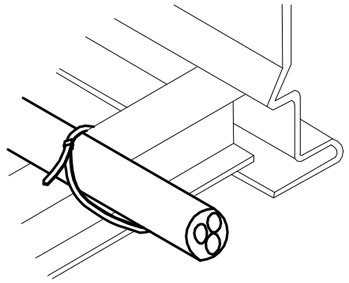

NYLON CABLE TIES

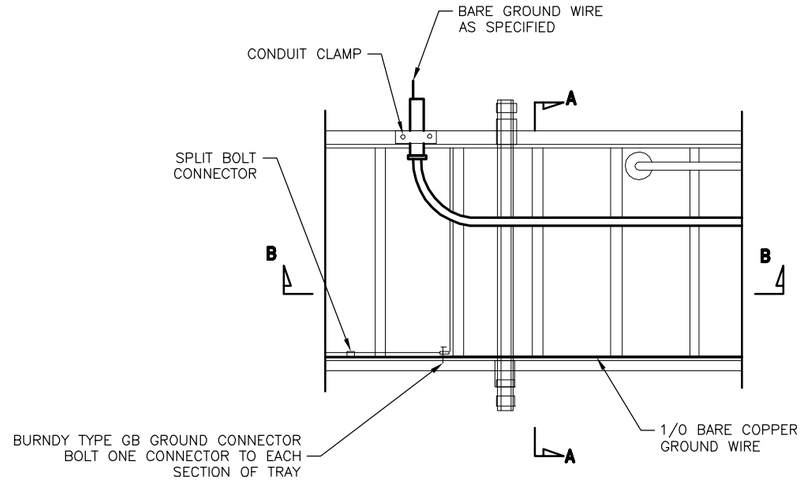

TRAY GROUNDING

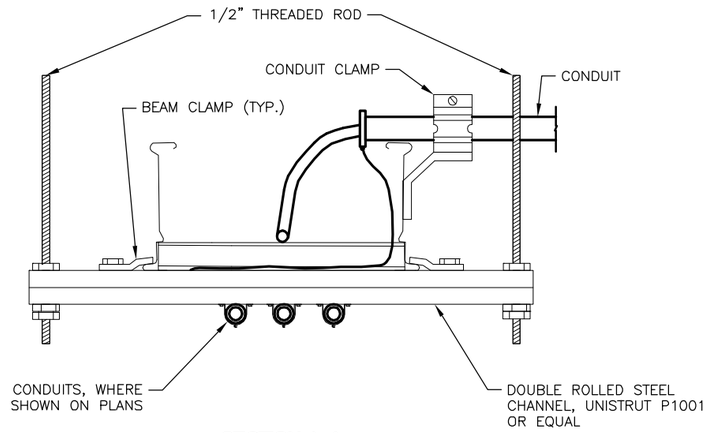

SECTION A-A

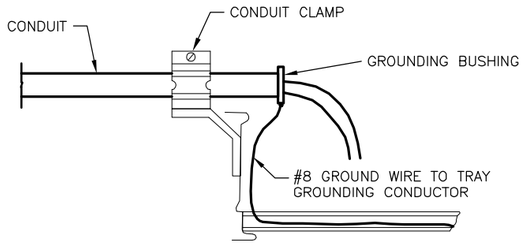

CONDUIT TO TRAY ADAPTER

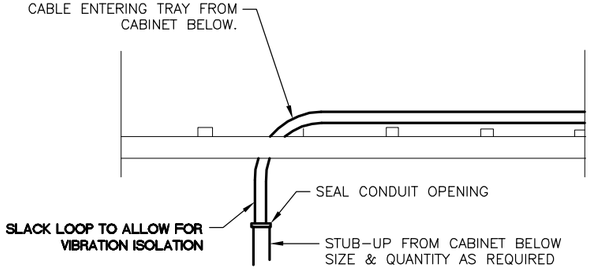

SECTION B-B

FIELD BOOK:						FED. AID No.		KING COUNTY DEPT. OF TRANSPORTATION HAROLD TANIGUCHI, DIRECTOR **SOUTH PARK BRIDGE #3179 REPLACEMENT** CABLE TRAY DETAILS	King County	BE26
SURVEYED:						PROJECT No. 300197				SHEET 631 OF 667 SHEETS
SURVEY BASE MAP:						SURVEY No. 32-24-4-22				
DESIGN ENTERED:	F. HAYWOOD	10/2009				MAINTENANCE DIVISION No. 3				316-63 (___)
DESIGNED	G. PETERS	10/2009								
CHECKED:	R. STEEL	11/2009								
SUPERVISOR:	G. PETERS	01/2010	NUM.	REVISION	BY	DATE				

NW TRAFFIC GATE WARN LTS	375	15	1
NE TRAFFIC GATE WARN LTS	375	15	1
MAIN DRIVE MOTOR HEATERS	250	15	1
N. TOWER SMOKE/HEAT DET	120	15	1
RDWY LEVEL LIGHTING	230	15	1
RDWY LEVEL RECEPT	825	20	1
EQUIP LEVEL LIGHTING	650	15	1
EQUIP LVL RECEPT. – E. WALL	550	20	1
PIT LEVEL LIGHTING	720	15	1
PIT LEVEL LIGHTING	630	15	1
EQUIP LVL RECEPT. – N. WALL	550	20	1
MAINT. PLATFORM LGT & RECEPT	875	20	1
SPARE		20	1
N. CONTROL HOUSE CCTV CAMERA SYSTEM	1320	20	1
CCTV EQUIPMENT RACK	1200	20	1
FIRE PROTECTION LINE HEAT TRACE	1370	30	
	1370		2
BASCULE SPAN WALKWAY LIGHTING	550	15	1
SPARE		15	1
N. GREASE SYSTEM CONTROLLER	372	15	
	372		2

15	1	375	NW TRAFFIC BARR WARN LTS
15	1	375	NE TRAFFIC BARR WARN LTS
15	1	125	AUX DRIVE MOTOR HEATER
15	1	340	OPERATOR LEVEL LIGHTING
20	1	550	OPER. LVL RECEPT. – S. WALL
15	1	375	BATHROOM LTG & RECEPT
15	1	450	PIER STAIRWAY LIGHTING
20	1	1080	MACHINERY AREA LIGHTING
20	1	1100	MACHINERY AREA RECEPT
20	1	550	PIT LEVEL RECEPT
20	1	550	OPER. LVL RECEPT. – E. WALL
15	1	250	TOWER CLOCK
30		2400	HVAC AIR HANDLER AH–1
	2	2400	
15	1	540	BASCULE MAINT. WALKWAY LIGHTING
20		475	MAIN WATER LINE HEAT TRACE
	2	475	
30			WATER HEATER
	2		
60		4234	PANELBOARD PP–1
	2	3430	

SE TRAFFIC GATE WARN LTS	375	15	1
SW TRAFFIC GATE WARN LTS	375	15	1
MAIN DRIVE MOTOR HEATERS	250	15	1
S. TOWER SMOKE/HEAT DET	120	15	1
RDWY LEVEL LIGHTING	230	15	1
RDWY LEVEL RECEPT	825	20	1
EQUIP LEVEL LIGHTING	650	15	1
EQUIP LEVEL RECEPT. – W. WALL	550	20	1
PIT LEVEL LIGHTING	720	15	1
PIT LEVEL LIGHTING	630	15	1
EQUIP LEVEL RECEPT. – S. WALL	550	20	1
MAINT. PLATFORM LTG & RECEPT	875	20	1
SPARE		15	1
S. CONTROL HOUSE CCTV CAMERAS	1320	20	1
FIRE PROTECTION LINE HEAT TRACE	1370	30	
	1370		2
BASCULE SPAN WALKWAY LIGHTING	550	15	1
SPARE		20	1
SPARE		15	1
S. GREASE SYSTEM CONTROLLER	372	15	
	372		2

15	1	375	SE TRAFF BARR WARN LTS
15	1	375	SW TRAFF BARR WARN LTS
15	1	125	AUX DRIVE MOTOR HEATER
15	1	240	OPERATOR LEVEL LIGHTING
20	1	550	OPER LVL RECEPT – W. WALL
20	1	375	BATHROOM LGT & RECEPT
15	1	450	PIER STAIRWAY LIGHTING
15	1	1080	MACHINERY AREA LIGHTING
20	1	1100	MACHINERY AREA RECEPT
20	1	550	PIT LEVEL RECEPT
20	1	550	OPER LVL RECEPT – N. WALL
15	1	250	TOWER CLOCK
30		2400	HVAC AIR HANDLER AH–1
	2	2400	
15	1	750	S.INTERCOM SPEAKER STATION
20		475	MAIN WATER LINE HEAT TRACE
	2	475	
30			WATER HEATER
	2		
60		1320	PANELBOARD PP–2
	2	825	

TRAFFIC SIGNALS	750	15	1
AIR HORN	1344	20	1
NAVIGATION LIGHTS	175	15	1
N. SPAN CONTROL	250	15	1
SPAN MOTOR SELECT	200	15	1
GENERATOR MONITOR	375	15	1
POWER MONITOR	450	15	1
CPU 1	750	15	1
I/O RACKS	750	15	1
N. LUBE PUMP CONTROL	150	15	1
SPARE		15	1
SPACE			

15	1	100	WARNING BELLS
15	1	175	FULL AUTO CONTROL
15	1	175	N. SPAN POSITION
15	1	240	N. SPAN POSITION MONITOR
20	1	600	PANELVIEW
15	1	100	LEAF LOCKOUT CONTROL
15	1	180	N TOWER SMOKE DETECTORS
15	1	750	CPU 2
15	1	375	CABINET RECEPTACLE & LIGHT
15	1	100	N. PIER HEAT TRACE MONITOR
15	1		SPARE
			SPACE

SPARE		15	1
S LUBE PUMP CONTROL	150	15	1
NAVIGATION LIGHTS	175	15	1
I/O RACKS	750	15	1
SPACE			
SPACE			

15	1	175	S. SPAN POSITION
15	1	240	S. SPAN POSITION MONITOR
15	1	375	CABINET RECEPTACLE & LIGHT
15	1	180	S TOWER SMOKE DETECTORS
15	1	100	S. HEAT TRACE MONITOR
			SPACE

GENERATOR BLOCK HEATER	1000	15	
	1000		2
LIGHTING	90	15	1
SPARE		15	1

15	1		SPARE
15	1	200	ATS CONTROL
15	1	550	MAINTENANCE RECEPTACLES
15	1	360	BATTERY CHARGER

LP–1	120/240 VOLT, 1 PH	SURFACE	250 AMP	N. CONTROL TOWER
LP–2	120/240 VOLT, 1 PH	SURFACE	225 AMP	S. CONTROL TOWER
PP–1	120/240 VOLT, 1 PH	SURFACE	60 AMP	MAIN PLC CABINET
PP–2	120/240 VOLT, 1 PH	SURFACE	60 AMP	REMOTE PLC CABINET
MPZ–1	120/240 VOLT, 1 PH	SURFACE	80 AMP	GENERATOR AREA

TX–1	480 VOLT	120/240 VOLT	37.5KVA	FLOOR	N CONTROL TOWER
TX–2	480 VOLT	120/240 VOLT	25KVA	FLOOR	S CONTROL TOWER
TX–3	480 VOLT	480 VOLT	93KVA	FLOOR	N CONTROL TOWER
TX–4	480 VOLT	480 VOLT	93KVA	FLOOR	N CONTROL TOWER
TX–5	480 VOLT	480 VOLT	93KVA	FLOOR	S CONTROL TOWER
TX–6	480 VOLT	480 VOLT	93KVA	FLOOR	S CONTROL TOWER

FIELD BOOK:
SURVEYED:
SURVEY BASE MAP:
DESIGN ENTERED: F. HAYWOOD 10/2009
DESIGNED G. PETERS 10/2009
CHECKED: R. STEEL 11/2009
SUPERVISOR: G. PETERS 01/2010

NUM.	REVISION	BY	DATE

JOHN G. SCHAILEY STATE OF WASHINGTON 45694 REGISTERED PROFESSIONAL ENGINEER

HNTB

FED. AID No.
PROJECT No. 300197
SURVEY No. 32-24-4-22
MAINTENANCE DIVISION No. 3

KING COUNTY DEPT. OF TRANSPORTATION
HAROLD TANIGUCHI, DIRECTOR

SOUTH PARK BRIDGE #3179 REPLACEMENT

PANELBOARD & TRANSFORMER SCHEDULES

King County

BE27

SHEET 632 OF 667 SHEETS

316-63 (___)

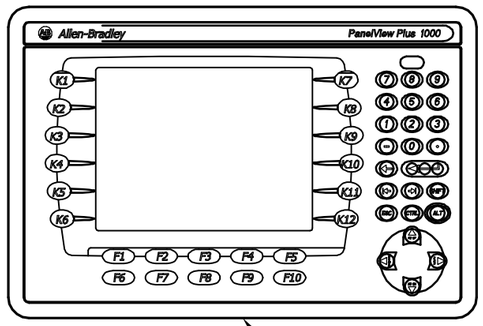

SEE NOTE 1, SHEET BE29

N.E. DRIVE MTR AMPS
33.3

N.W. DRIVE MTR AMPS
33.3

N.E. DRIVE MTR RPM
600

N.W. DRIVE MTR RPM
600

OPEN DL-14N

NEAR OPEN DL-13N

NEAR CLOSED DL-12N

CLOSED DL-11N

NORTH SPAN
90 80 70 60 50 40 30 20 10 0

SOUTH SPAN
90 80 70 60 50 40 30 20 15 0

OPEN DL-14S

NEAR OPEN DL-13S

NEAR CLOSED DL-12S

CLOSED DL-11S

S.E. DRIVE MTR AMPS
33.3

S.W. DRIVE MTR AMPS
33.3

S.E. DRIVE MTR RPM
600

S.W. DRIVE MTR RPM
600

0017

0017

LAMP TEST
PB-4

13.50

60.00

SEE NOTE 4, SHEET BE29

TRAFFIC SIGNAL BYPASS TS-1

N.E. TRAFFIC RESIST GATE BYPASS TS-6E

N.E. TRAFFIC GATE BYPASS TS-2

N.W. TRAFFIC RESIST GATE BYPASS TS-6W

N.W. TRAFFIC GATE BYPASS TS-3

S.E. TRAFFIC RESIST GATE BYPASS TS-7E

S.E. TRAFFIC GATE BYPASS TS-4

S.W. TRAFFIC RESIST GATE BYPASS TS-7W

S.W. TRAFFIC GATE BYPASS TS-5

EAST SPAN LOCK BYPASS TS-8

WEST SPAN LOCK BYPASS TS-9

BYPASS SWITCHES BEHIND LOCKABLE ACCESS PANEL

CLEAR / STOP / TRAFFIC SIGNALS / START — DL-1

BRIDGE CONTROL — OFF / ON — KS-1

GEN RUN / ATS NORMAL / GEN FAULT / ATS EMERG — DL-16

NAVIGATION LIGHTS — OFF — AUTO / ON — CS-18

NORTH SPAN BRAKE CONTROL — THRUSTER BRAKES NORTH — AUTO SET / RELEASE — KS-2N

NORTH MOTOR BRAKES — MOTOR BRAKE A SET / MOTOR BRAKE B SET / MOTOR BRAKE A FREE / MOTOR BRAKE B FREE — DL-2

NORTH MACHINE BRAKES — MACH BRAKE A SET / MACH BRAKE B SET / MACH BRAKE A FREE / MACH BRAKE B FREE — DL-3

PUSH TO STOP / PULL TO RELEASE — E-STOP — PB-3

SOUTH MACHINE BRAKES — MACH BRAKE A SET / MACH BRAKE B SET / MACH BRAKE A FREE / MACH BRAKE B FREE — DL-4

SOUTH MOTOR BRAKES — MOTOR BRAKE A SET / MOTOR BRAKE B SET / MOTOR BRAKE A FREE / MOTOR BRAKE B FREE — DL-5

SOUTH SPAN BRAKE CONTROL — THRUSTER BRAKES SOUTH — AUTO SET / RELEASE — DL-23

MAIN DRIVE BYPASS TS-14

TRAFFIC SIGNALS — GREEN / RED — CS-1

WARNING BELL — OFF / ON — CS-22

ALL — GATE RAISE — PB-2

N. LUBE PUMP 1 RUN / N. LUBE PUMP 2 RUN / S. LUBE PUMP 1 RUN / S. LUBE PUMP 2 RUN — DL-17

N. LUBE PUMPS FLOW OK / S. LUBE PUMPS FLOW OK — DL-16

PULLED / PUSH TO STOP / EAST SPAN LOCK / DRIVEN — CS-12

PULLED / PUSH TO STOP / WEST SPAN LOCK / DRIVEN — CS-13

MOTOR 1 / MOTOR 1-2 / SPAN MOTOR SELECT / MOTOR 2 — CS-17

AUX. DRIVE — N. AUX. DRIVE READY / S. AUX. DRIVE READY / N. AUX. DRIVE RUN / S. AUX. DRIVE RUN — DL-10

NORTH SPAN / BOTH SPANS / SPAN SELECT / SOUTH SPAN — CS-19

RAISE / PUSH TO STOP / AUX. DRIVE / LOWER — CS-20

HORN — PB-1

RAISED / RELEASE TO STOP / S.E. TRAFFIC GATE / LOWERED — CS-4

RAISED / RELEASE TO STOP / S.W. TRAFFIC GATE / LOWERED — CS-5

RAISED / TURN TO STOP / S.E. RESIST GATE / LOWERED — CS-7

RAISED / TURN TO STOP / S.W. RESIST GATE / LOWERED — DL-7

MANUAL / AUTO / SPAN CONTROL SELECTOR — CS-21

LOCKED OUT — DL-15N

NORTH SPAN MAIN DRIVE — NORTH MOTOR 1 RUN / NORTH MOTOR 2 RUN / NORTH MOTOR 1 READY / NORTH MOTOR 2 READY — DL-8

AUTO RAISE / AUTO LOWER / FULL AUTO CONTROL — DL-15

SOUTH SPAN MAIN DRIVE — SOUTH MOTOR 1 RUN / SOUTH MOTOR 2 RUN / SOUTH MOTOR 1 READY / SOUTH MOTOR 2 READY — DL-9

LOCKED OUT — DL-15S

RAISED / RELEASE TO STOP / N.E. TRAFFIC GATE / LOWERED — CS-2

RAISED / RELEASE TO STOP / N.W. TRAFFIC GATE / LOWERED — CS-3

RAISED / TURN TO STOP / N.E. RESIST GATE / LOWERED — DL-6

RAISED / TURN TO STOP / N.W. RESIST GATE / LOWERED — CS-6

ADVERSE WEATHER / AUTO / SPEED SELECT / MAINT. — CS-16

NORTH LEAF LOCK OUT — OFF / ON — KS-3N

NORTH SPAN — MAN. STOP MAN. — RAISE / LOWER — CS-15N

AUTO CONTROL — AUTO STOP AUTO — RAISE / LOWER — CS-12

SOUTH SPAN — MAN. STOP MAN. — LOWER / RAISE — CS-15S

SOUTH LEAF LOCK OUT — OFF / ON — KS-3S

20.00

FIELD BOOK:					
SURVEYED:					
SURVEY BASE MAP:					
DESIGN ENTERED:	F. HAYWOOD	9/2008			
DESIGNED	G. PETERS	9/2008			
CHECKED:	R. STEEL	11/2009			
SUPERVISOR:	G. PETERS	01/2010	NUM.	REVISION	BY / DATE

JOHN G. SCHALLERT — STATE OF WASHINGTON — 40694 — REGISTERED PROFESSIONAL ENGINEER

HNTB

FED. AID No.

PROJECT No. 300197

SURVEY No. 32-24-4-22

MAINTENANCE DIVISION No. 3

KING COUNTY DEPT. OF TRANSPORTATION
HAROLD TANIGUCHI, DIRECTOR

SOUTH PARK BRIDGE #3179 REPLACEMENT

CONTROL CONSOLE LAYOUT

King County

BE28

SHEET 633 OF 667 SHEETS

316-63 (____)

NOTES:

1. ONE PANELVIEW SCREEN SHALL DISPLAY THE FOLLOWING INFORMATION:

   1. ANGLE OPEN
   2. DESIRED SPEED
   3. ACTUAL SPEED
   4. "NW" SPAN SPEED
   5. "NE" SPAN SPEED
   6. LS-EL1N-2.5 DEG.
   7. LS-EL2N-63 DEG.
   8. LS-EL3N-13 DEG.
   9. LS-EL4N-74.5 DEG.
   10. LS-EL6N-68 DEG.
   11. LS-EL8N-5.0 DEG.
   12. LS-1N-76 DEG.
   13. LS-HL1N-11 DEG.
   14. LS-HL2N-64 DEG.
   15. HEIGHT AT OVERSPEED TRIP:
   16. SPEED AT OVERSPEED TRIP:
   17. TIME

   DISPLAY SELECTIONS 1 THRU 16 ARE FOR THE NORTH SPAN; A SECOND SCREEN DISPLAY FOR THE SOUTH SPAN SHALL BE SIMILAR WITH SELECTIONS 18 THRU 33.

2. CENTER ALL SWITCH POINT LABELS WITHIN THE SQUARE.

3. INTERLOCK BYPASS SHALL BE PLC BASED WHICH WHEN ACTIVATED WILL STEP THROUGH EACH INTERLOCK SEQUENCE BY "CREATING" SOFTWARE INTERLOCKS TO PERMIT OPERATION OF EACH DEVICE IN A SEQUENCIAL STEPPED PROCESS AND NOT PERMIT OPERATION OF ANY DEVICE OUT SEQUENCE.

4. BYPASS SWITCHES TS-2 THRU TS-13, SHALL BE MOMENTARY SPRING RETURN. TS-1 AND TS-14 SHALL BE MAINTAIN.

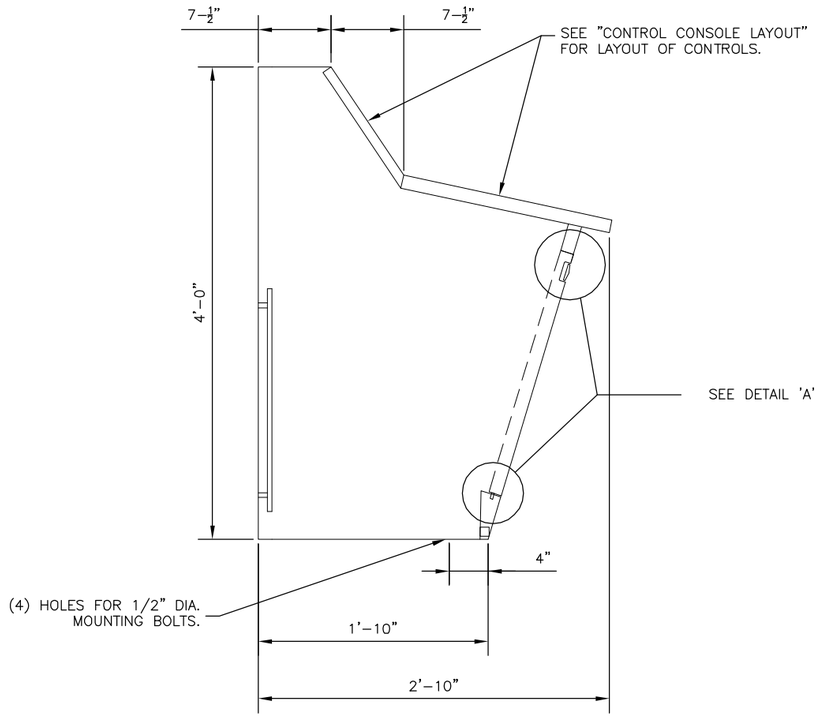

SIDE VIEW
NOT TO SCALE

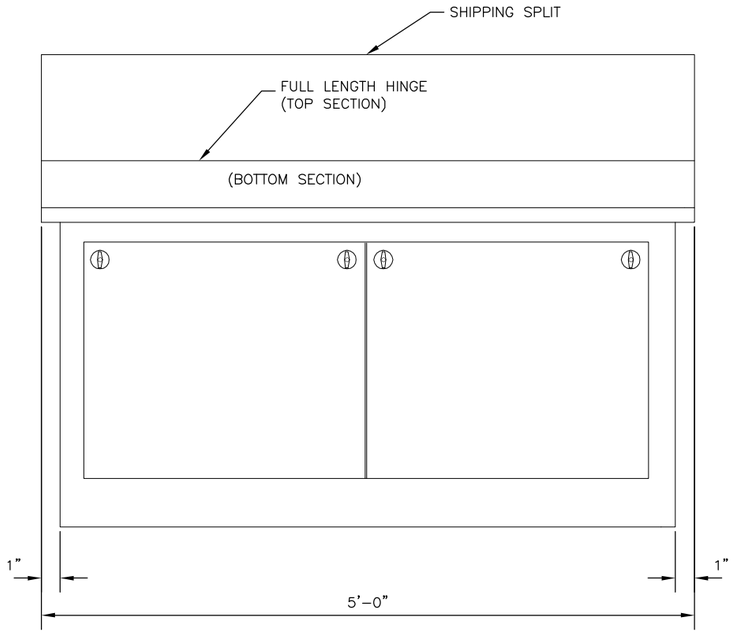

NOTE:

SEE SHEET BE26 FOR LAYOUT OF TOP AND BOTTOM SECTIONS

FRONT VIEW
NOT TO SCALE

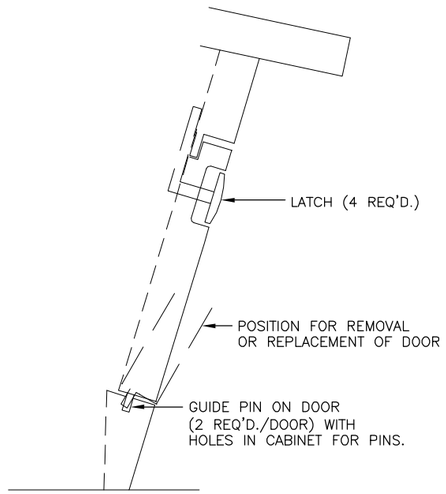

DETAIL 'A'

FIELD BOOK:					
SURVEYED:					
SURVEY BASE MAP:					
DESIGN ENTERED: F. HAYWOOD	12/2008				
DESIGNED G. PETERS	12/2008				
CHECKED: R. STEEL	11/2009				
SUPERVISOR: G. PETERS	01/2010	NUM.	REVISION	BY	DATE

JOHN G. SCHALLERT — STATE OF WASHINGTON — REGISTERED PROFESSIONAL ENGINEER

HNTB

FED. AID No.
PROJECT No. 300197
SURVEY No. 32-24-4-22
MAINTENANCE DIVISION No. 3

KING COUNTY DEPT. OF TRANSPORTATION
HAROLD TANIGUCHI, DIRECTOR

SOUTH PARK BRIDGE #3179 REPLACEMENT

CONTROL CONSOLE DETAILS

King County

BE29

SHEET 634 OF 667 SHEETS

316-63 (___)

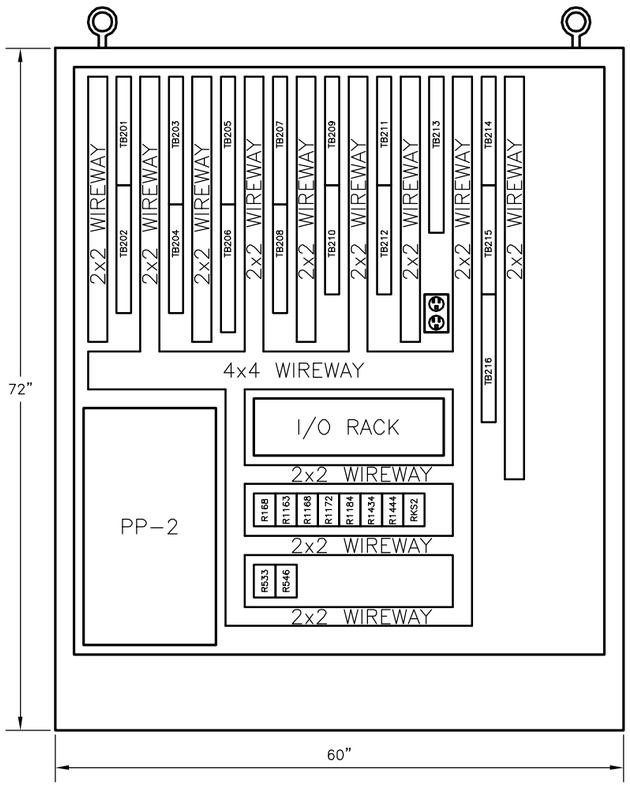

REMOTE PLC PANEL LAYOUT
NTS

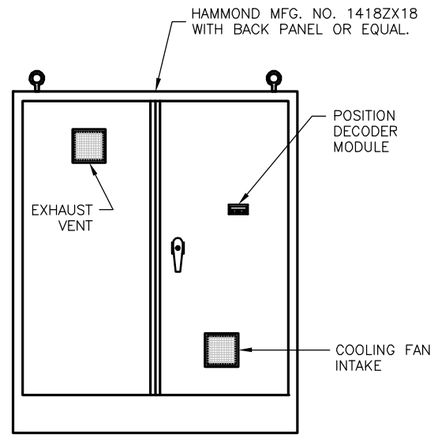

REMOTE PLC CABINET ENCLOSURE
NTS

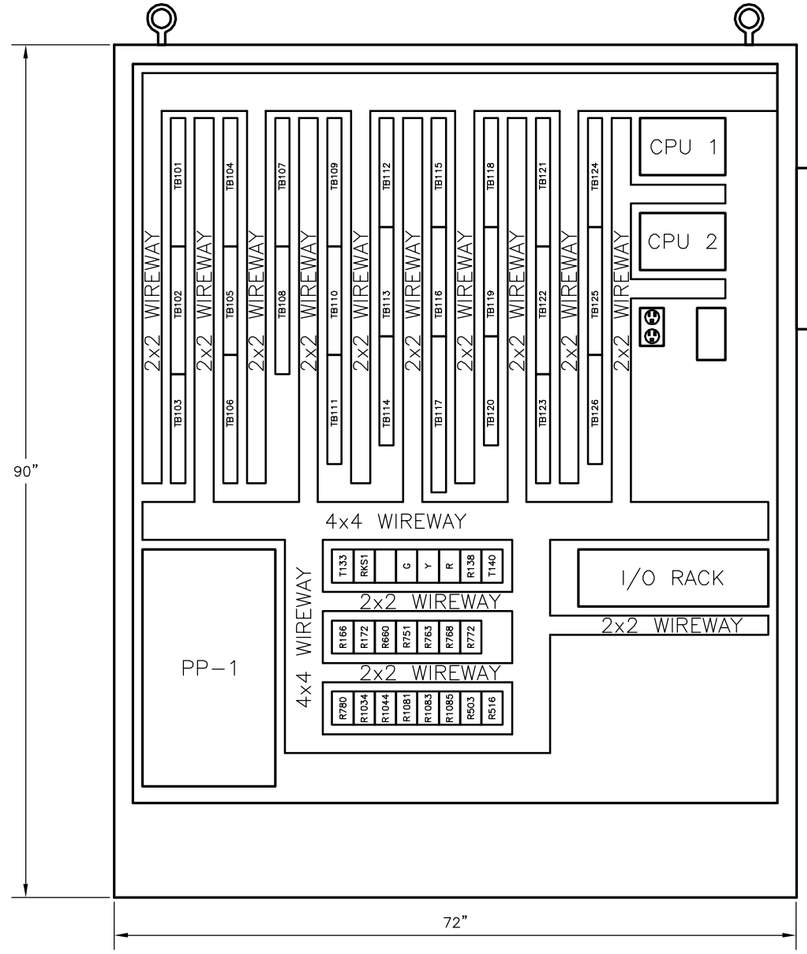

MAIN PLC PANEL LAYOUT
NTS

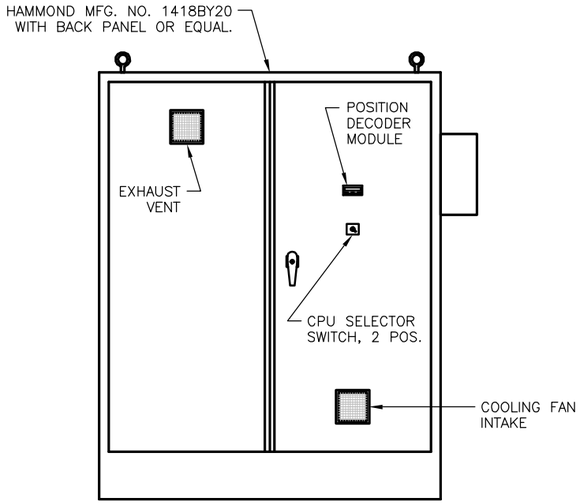

MAIN PLC CABINET ENCLOSURE
NTS

NOTES:

1. PROVIDE FOLD DOWN SHELF ON INSIDE ACCESS DOOR OF MAIN PLC CABINET FOR LAPTOP COMPUTER.

FIELD BOOK:					
SURVEYED:					
SURVEY BASE MAP:					
DESIGN ENTERED:	F. HAYWOOD	10/2009			
DESIGNED	G. PETERS	10/2009			
CHECKED:	R. STEEL	11/2009			
SUPERVISOR:	G. PETERS	01/2010	NUM.	REVISION	BY / DATE

JOHN G. SCHALLERT — STATE OF WASHINGTON — REGISTERED PROFESSIONAL ENGINEER

HNTB

FED. AID No.

PROJECT No. 300197

SURVEY No. 32-24-4-22

MAINTENANCE DIVISION No. 3

KING COUNTY DEPT. OF TRANSPORTATION
HAROLD TANIGUCHI, DIRECTOR

SOUTH PARK BRIDGE #3179 REPLACEMENT

PLC CABINET DETAILS

King County

BE30

SHEET 635 OF 667 SHEETS

316-63 (____)

SWITCHES

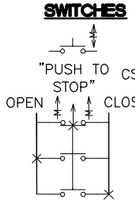

PUSHBUTTON (MOMENTARY)

COMBINATION SELECTOR SWITCH WITH PUSHBUTTON ARROWS INDICATE SPRING RETURN TO POSITION SHOWN X INDICATES SWITCH CLOSURE IN EACH POSITION CS-3 INDICATES SWITCH NUMBER-SEE CONTROL PANEL VIEWS FOR SWITCH LOCATIONS.

LIMIT SWITCH, (LS-) NORMALLY CLOSED

LIMIT SWITCH, (LS-) NORMALLY OPEN

TOGGLE SWITCH (TS-) MAINTAINED CONTACT

TOGGLE SWITCH (TS-) MOMENTARY CONTACT

SPEED SWITCH,(SS-) OPENS ON OVERSPEED

TEMPERATURE SWITCH,(TPS-) OPENS ON RISING TEMPERATURE

FLOW SWITCH,(FS-) CLOSES ON FLUID FLOW

RELAYS

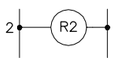

RELAY COIL, RELAY NUMBER IS SAME AS LADDER DIAGRAM LINE NUMBER. 7 INDICATES A NORMALLY OPEN CONTACT OF R2 ON LINE 7. UNDERLINED 34 INDICATES A NORMALLY CLOSED CONTACT ON LINE 34. EACH SCHEMATIC SHEET HAS 99 OR FEWER LINES. THE 725 INDICATES A CONTACT ON LINE 25 OF SCHEMATIC SHEET 7.

R2 — NORMALLY OPEN INSTANTANEOUS CONTACT OF RELAY R2. COIL IS ON SAME SHEET AS CONTACT.

R702 — NORMALLY CLOSED INSTANTANEOUS CONTACT OF RELAY WHOSE COIL IS ON SCHEMATIC SHEET 7, LINE 2.

R63 — MACHINE TOOL RELAY

TRANSITIONAL CONTACT, CLOSED FOR ONE PROGRAM CYCLE WHEN RELAY IS TURNED OFF.

TRANSITIONAL CONTACT CLOSED FOR ONE PROGRAM CYCLE WHEN RELAY IS TURNED ON.

TIMING RELAYS

NORMALLY OPEN, TIME DELAY CLOSING

NORMALLY CLOSED, TIME DELAY OPENING

30 SEC. T24 — TIME RELAY-30 SEC. DENOTES TIMING INTERVAL

MISC. DEVICES

TRANSFORMER SECONDARY

FUSE

GROUND CONNECTION

LAMP

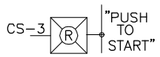

LAMP ON PANEL. R INDICATES RED LENSE. CS-3 INDICATES DEVICE NUMBER, SEE CONTROL PANEL VIEWS FOR SWITCH LOCATIONS. WORDS IN MARGIN INDICATE LENSE ENGRAVING.

WARNING BELL

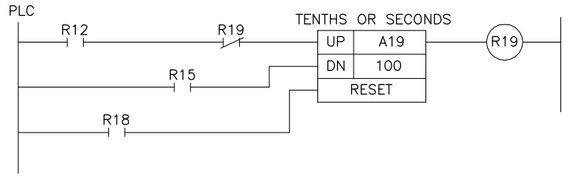

TYPICAL COUNTER R12 CLOSED WILL ALLOW TIMER TO COUNT UP AT 10 COUNTS PER SECOND UNTIL THE UPPER LIMIT OF 100 IS REACHED AT WHICH TIME R19 IS ENERGIZED AND THE CONTACT OPENS. WHEN R15 CLOSES THE COUNTER WILL COUNT DOWN AT THE SAME RATE UNTIL THE REGISTER A19 REACHES ZERO WHEN R18 CLOSES THE COUNTER REGISTER

WIRING

LINE CONNECTIONS

LINES CROSSING WITHOUT BEING CONNECTED

WIRING TERMINAL--SEE TERMINAL LOCATION LEGEND

4 — 4 HEAVY LINE INDICATES FIELD WIRING BETWEEN TERMINAL POINTS

TERMINAL LOCATION LEGEND

TERMINAL IN CONTROL CONSOLE

TERMINAL IN PLC CABINET

TERMINAL IN MOTOR STARTER OR MCC

A TERMINAL IN DRIVE CONTROLLER '1'

B TERMINAL IN DRIVE CONTROLLER '2'

NOTE:

TERMINAL NUMBERS 101 THRU 199 ARE IN THE MAIN PLC CABINET. TERMINAL NUMBERS 201 THRU 299 ARE IN THE REMOTE PLC CABINET.

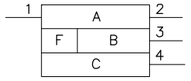

MATHEMATICAL OPERATIONS

SCHEMATIC REPRESENTATION OF ARITHMETIC OPERATION.

ARITHMETIC OPERATION, INTEGER MODE: TAKE THE QUANTITY "A", (SEE FIGURE) AND ADD SUB-TRACT, MULTIPLY, OR DIVIDE BY THE QUANTITY "B" AS INDICATED BY THE FUNCTION "F"; PUT THE RESULT IN REGISTER "C". THE ACTUAL VALUES ARE THE WHOLE NUMBERS SHOWN, OR THE CONTENTS OF THE REGISTER AT THE ADDRESS INDICATED. THE OPERATION IS PERFORMED WHENEVER "POWER" IS APPLIED AT "1".

THE BOUNDARY VALUES LISTED BELOW ARE FOR A MINIMUM INTEGER CAPABILITY OF 999. THE BOUNDARIES MAY BE HIGHER ACCORDING TO THE CAPABILITY OF THE CPU.

FIGURE ABOVE) WILL VARY ACCORDING TO THE OPERATION AS LISTED BELOW;

THE STATUS OF THE VALUES AT "2","3", & "4"(SEE

MULTIPLY (X)
2-"ON" WHEN OPERATION IS COMPLETE

DIVIDE (÷)
2-"ON" WHEN OPERATION IS COMPLETE

NOTE: 3 OR 4 "ON" SHALL CAUSE "C" TO BE SET TO 000

ADDITION (+)
2-"ON" IF "A" + "B" = 1000
3-NOT USED
4-NOT USED

NOTE: 2 "ON" SHALL CAUSE "C" TO BE SET TO [A + B =1000]

SUBTRACTION (-)
2-"ON" IF "A" IS GREATER THAN (>) "B"
3-"ON" IF "A" IS EQUAL TO (=) "B"
4-"ON" IF "A" IS LESS THAN (<) "B"

NOTE: "C" WILL BE THE ABSOLUTE VALUE OF "A" - "B"

ADJACENT OUTPUTS ARE CONNECTABLE TO PROVIDE "GREATER THAN OR EQUAL TO" $\geq$ OR "LESS THAN OR EQUAL TO" $\leq$ FUNCTIONS.

SYMBOL LIST

RACEWAYS

CONDUIT, TURN UP, DASHED LINE REPRESENTS CONCEALED

CONDUIT, TURN DOWN, DASHED LINE REPRESENTS CONCEALED

CABLE TRAY, TURN UP

CABLE TRAY, TURN DOWN

SWITCHES, RECPTACLES AND MISC. DEVICES

$ SINGLE POLE SWITCH

$D DIMMER SWITCH, 600W

$3 THREE WAY SWITCH

$WP SWITCH IN WEATHERPROOF HOUSING

20A, 125V, DUPLEX CONVENIENCE OUTLET

GFI 20A, 125V, GROUND FAULT INTERRUPTER OUTLET

WP 20A, 125V, WEATHERPROOF OUTLET

30A, 240V, SPECIAL PURPOSE OUTLET

SPECIAL PURPOSE OUTLET FOR DESIGNATED EQUIPMENT

INTERCOM STATION

TELEPHONE STATION

S SMOKE DETECTOR

J JUNCTION/PULL BOX

DISCONNECT SWITCH

A FLUORESCENT LIGHT FIXTURE, RECESSED, SUSPENDED OR SURFACE MOUNTED, LETTER DESIGNATES TYPE AS SHOWN ON LIGHTING FIXTURE SCHEDULE IN THE SPECIFICATIONS.

A SURFACE MOUNTED LIGHT FIXTURE, LETTER DESIGNATES TYPE AS SHOWN ON LIGHTING FIXTURE SHEET

A TRACK LIGHT WITH TRACK AND FIXTURES, NUMBER OF TRIANGLES INDICATES NUMBER OF LAMPS AND GENERAL AREA OF AIMING, LETTER DESIGNATES TYPE

A CEILING MOUNTED LIGHT FIXTURE, LETTER INDICATES TYPE

UNSCHEDULED CIRCUITRY

HOME RUN TO PANELBOARD CIRCUIT BREAKER INDICATED WITH 1 CIRCUIT CONDUCTOR, 1 CIRCUIT NEUTRAL AND 1 CIRCUIT GROUND CONDUCTOR IN CIRCUIT CONDUIT

CIRCUIT RUN WITH 3 CIRCUIT CONDUCTORS, 1 NEUTRAL AND 1 CIRCUIT GROUND. EACH SMALL MARK TYPICAL FOR A SINGLE CIRCUIT CONDUCTOR

SWITCH CIRCUIT WITH TWO (2) CIRCUIT CONDUCTORS

SHIELDED TRANSFORMER

FIELD BOOK:							
SURVEYED:							
SURVEY BASE MAP:							
DESIGN ENTERED:	F. HAYWOOD	4/2009					
DESIGNED	G. PETERS	4/2009					
CHECKED:	R. STEEL	11/2009					
SUPERVISOR:	G. PETERS	01/2010	NUM.	REVISION	BY	DATE	

JOHN G. SCHALLERT — STATE OF WASHINGTON — 45694 — REGISTERED PROFESSIONAL ENGINEER

HNTB

FED. AID No.

PROJECT No. 300197

SURVEY No. 32-24-4-22

MAINTENANCE DIVISION No. 3

KING COUNTY DEPT. OF TRANSPORTATION
HAROLD TANIGUCHI, DIRECTOR

SOUTH PARK BRIDGE #3179 REPLACEMENT

ELECTRICAL LEGEND SHEET

King County

BE31

SHEET 636 OF 667 SHEETS

316-63 (___)

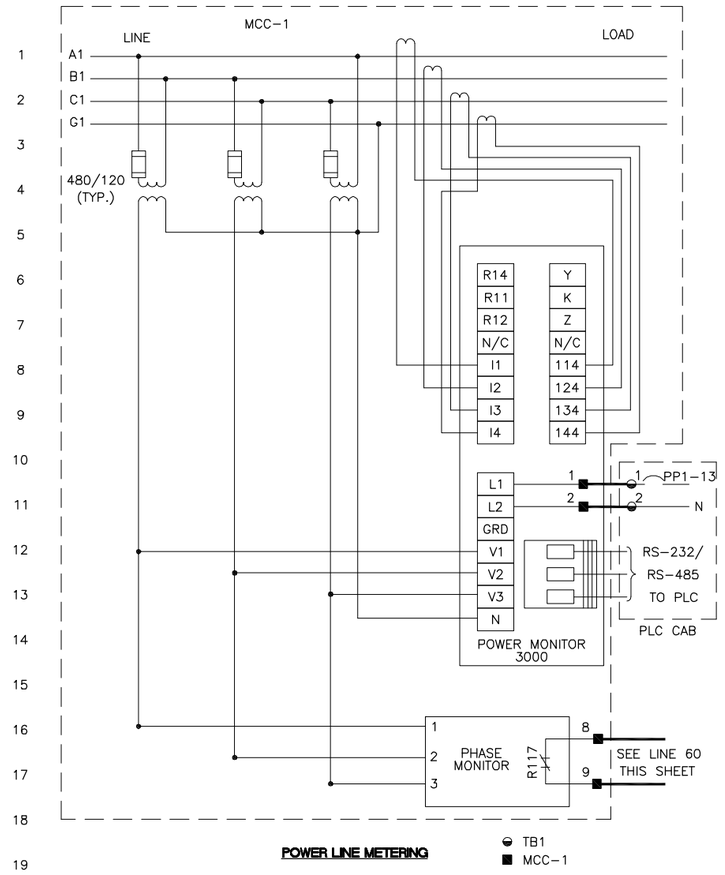

POWER LINE METERING

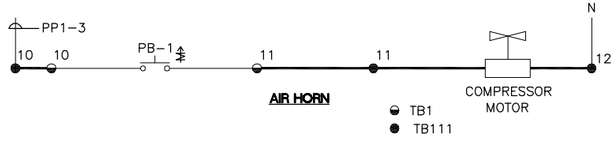

AIR HORN

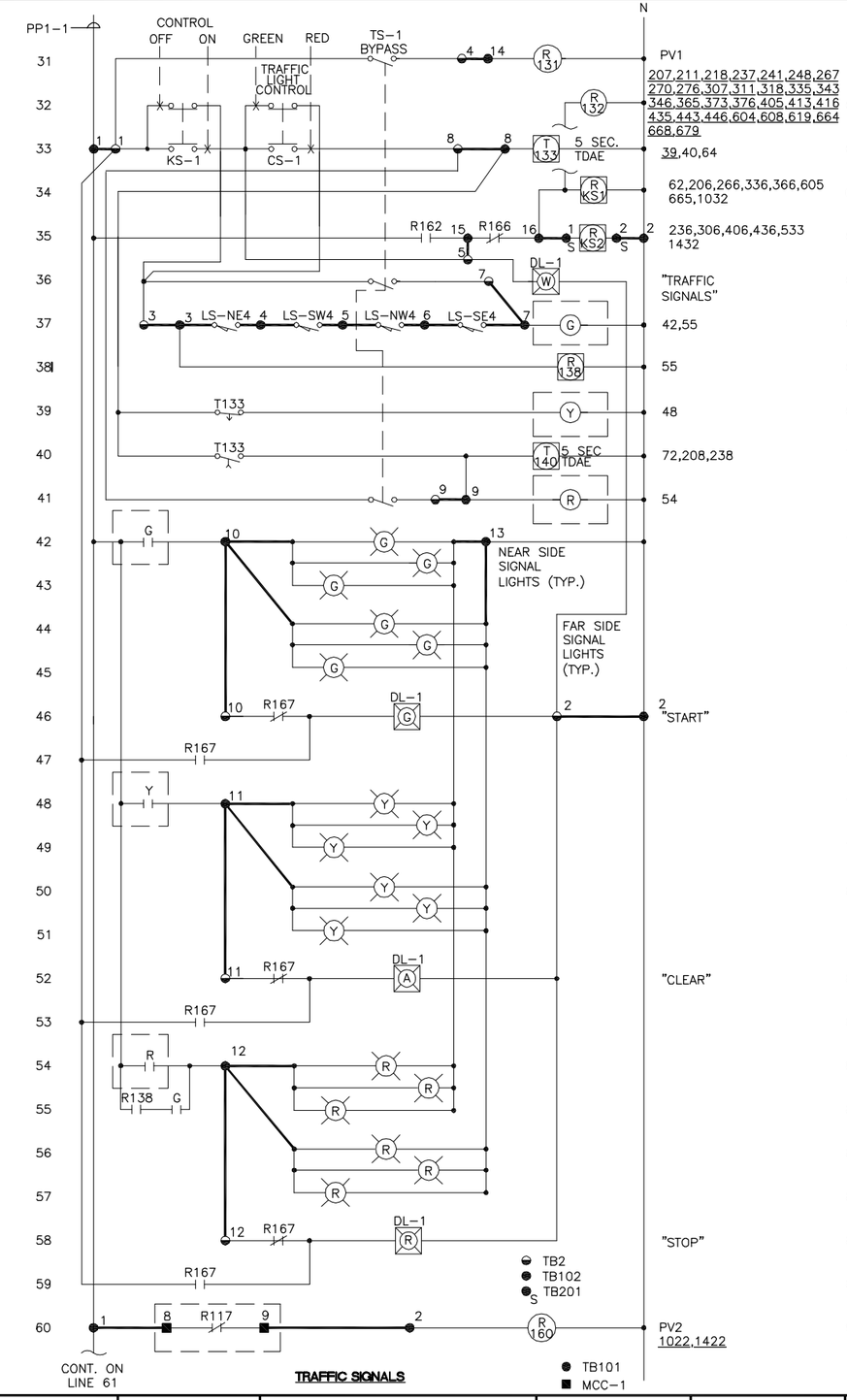

TRAFFIC SIGNALS

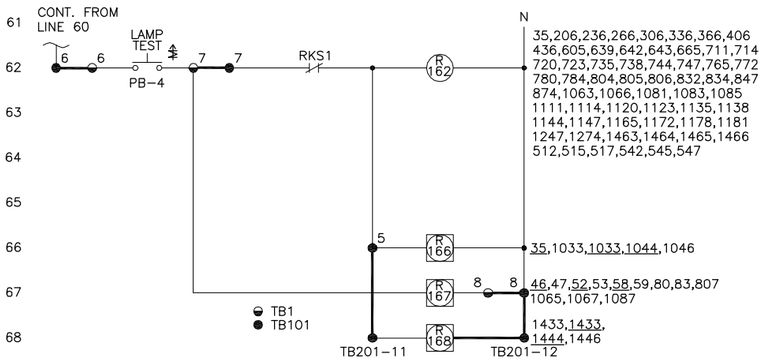

LAMP TEST

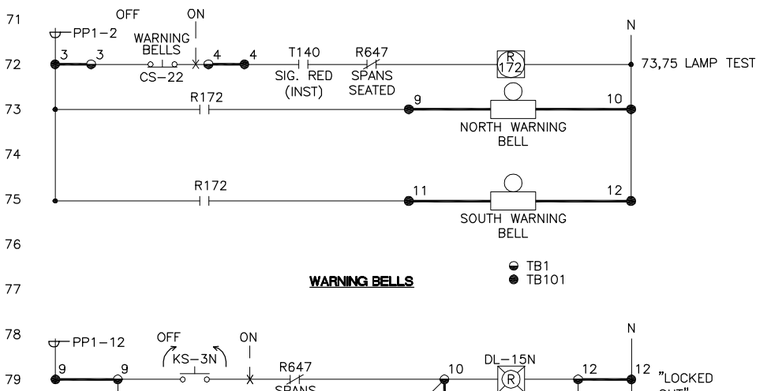

WARNING BELLS

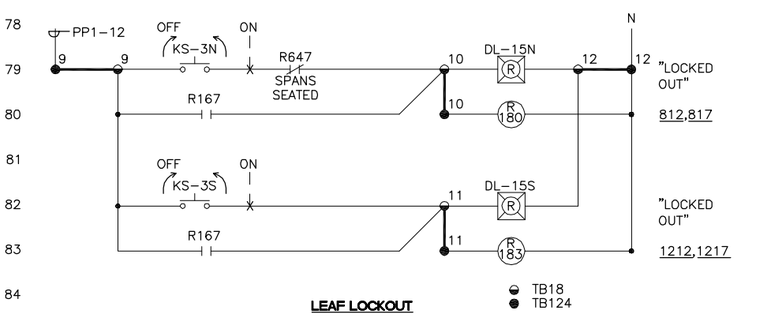

LEAF LOCKOUT

NOTE:

TIMER RELAY T140 SHALL CONSIST OF A MINIMUM OF TWO INSTANTANEOUS NORMALLY OPEN CONTACTS AND TWO TIMED NORMALLY OPEN CONTACTS.

FIELD BOOK:					
SURVEYED:					
SURVEY BASE MAP:					
DESIGN ENTERED:	F. HAYWOOD	4/2009			
DESIGNED	G. PETERS	4/2009			
CHECKED:	R. STEEL	11/2009			
SUPERVISOR:	G. PETERS	01/2010	NUM.	REVISION	BY / DATE

JOHN G. SCHALEBET STATE OF WASHINGTON 40094 REGISTERED PROFESSIONAL ENGINEER

HNTB

FED. AID No.

PROJECT No. 300197

SURVEY No. 32-24-4-22

MAINTENANCE DIVISION No. 3

KING COUNTY DEPT. OF TRANSPORTATION
HAROLD TANIGUCHI, DIRECTOR

SOUTH PARK BRIDGE #3179 REPLACEMENT

SCHEMATIC-1

King County

BE32

SHEET 637 OF 667 SHEETS

316-63 (___)

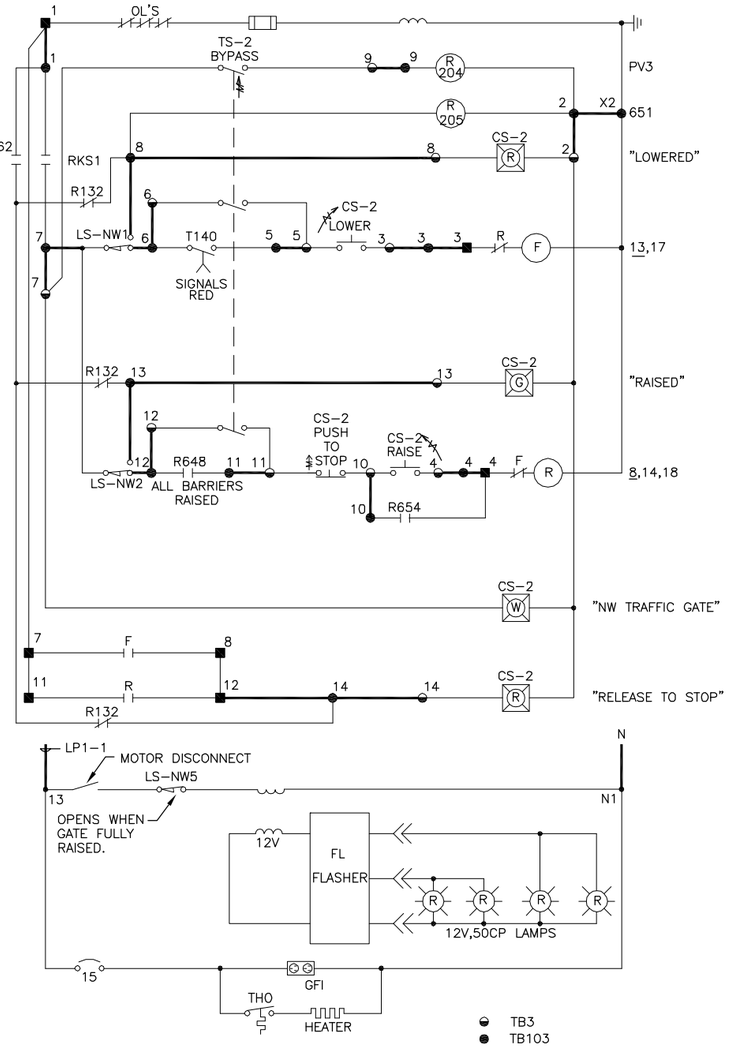

NORTHWEST TRAFFIC GATE

LIMIT SWITCH CONTACT DEVELOPMENT

CONTACT	FULLY LOWERED	OPERATOR POSITION	FULLY RAISED	FUNCTION THIS DWG OR DWG WHERE CONTACT IS SHOWN
LS-NW1	— — —			LOWER LIMIT
LS-NW1		— — — — — — —		IND LIGHT
LS-NW2			— — —	RAISE LIMIT
LS-NW2	— — —	— — — — — — —		IND LIGHT
LS-NW3		— — — — — — —	— — —	SCH3 LINE 8
LS-NW4	— — —	— — — — — — —		SCH1 LINE 37
LS-NW5			— — —	LINE 20

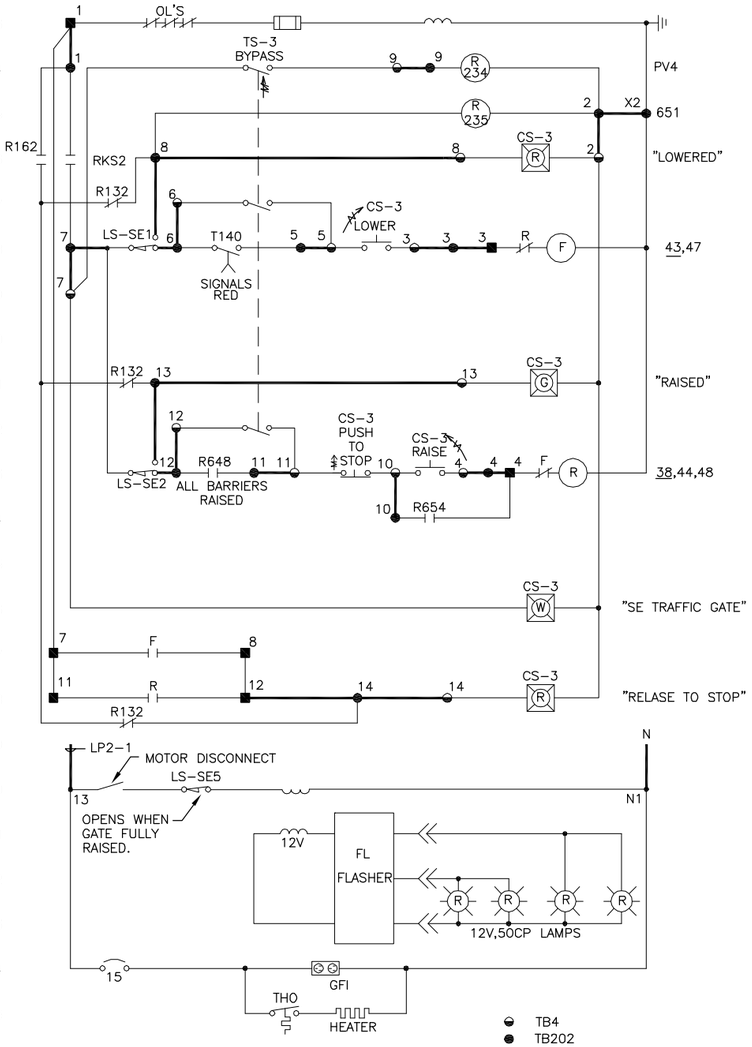

SOUTHEAST TRAFFIC GATE

LIMIT SWITCH CONTACT DEVELOPMENT

CONTACT	FULLY LOWERED	OPERATOR POSITION	FULLY RAISED	FUNCTION THIS DWG OR DWG WHERE CONTACT IS SHOWN
LS-SE1	— — —			LOWER LIMIT
LS-SE1		— — — — — — —		IND LIGHT
LS-SE2			— — —	RAISE LIMIT
LS-SE2	— — —	— — — — — — —		IND LIGHT
LS-SE3		— — — — — — —	— — —	SCH3 LINE 8
LS-SE4	— — —	— — — — — — —		SCH1 LINE 37
LS-SE5			— — —	LINE 50

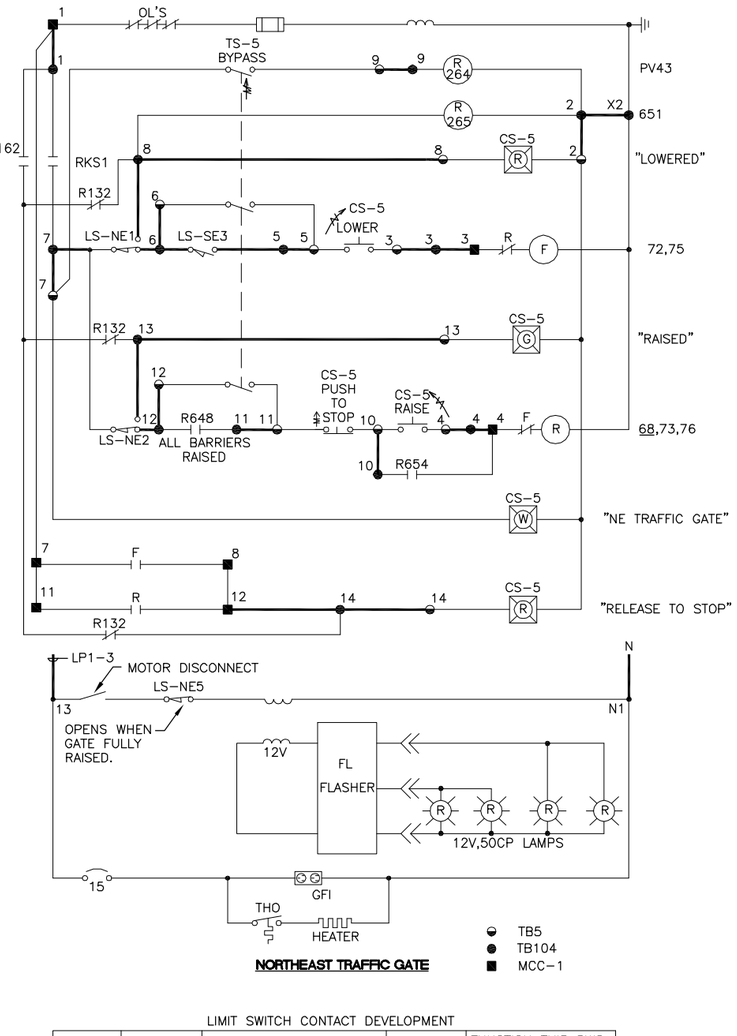

NORTHEAST TRAFFIC GATE

LIMIT SWITCH CONTACT DEVELOPMENT

CONTACT	FULLY LOWERED	OPERATOR POSITION	FULLY RAISED	FUNCTION THIS DWG OR DWG WHERE CONTACT IS SHOWN
LS-NE1	— — —			LOWER LIMIT
LS-NE1		— — — — — — —		IND LIGHT
LS-NE2			— — —	RAISE LIMIT
LS-NE2	— — —	— — — — — — —		IND LIGHT
LS-NE3		— — — — — — —	— — —	SCH3 LINE 8
LS-NE4	— — —	— — — — — — —		SCH1 LINE 37
LS-NE5			— — —	LINE 79

FIELD BOOK:					
SURVEYED:					
SURVEY BASE MAP:					
DESIGN ENTERED: F. HAYWOOD	4/2009				
DESIGNED G. PETERS	4/2009				
CHECKED: R. STEEL	11/2009				
SUPERVISOR: G. PETERS	01/2010	NUM.	REVISION	BY	DATE

JOHN G. SCHALLERT — STATE OF WASHINGTON — 40694 — REGISTERED PROFESSIONAL ENGINEER

HNTB

FED. AID No. _____

PROJECT No. 300197

SURVEY No. 32-24-4-22

MAINTENANCE DIVISION No. 3

KING COUNTY DEPT. OF TRANSPORTATION

HAROLD TANIGUCHI, DIRECTOR

SOUTH PARK BRIDGE #3179 REPLACEMENT

SCHEMATIC-2

King County

BE33

SHEET 638 OF 667 SHEETS

316-63 (____)

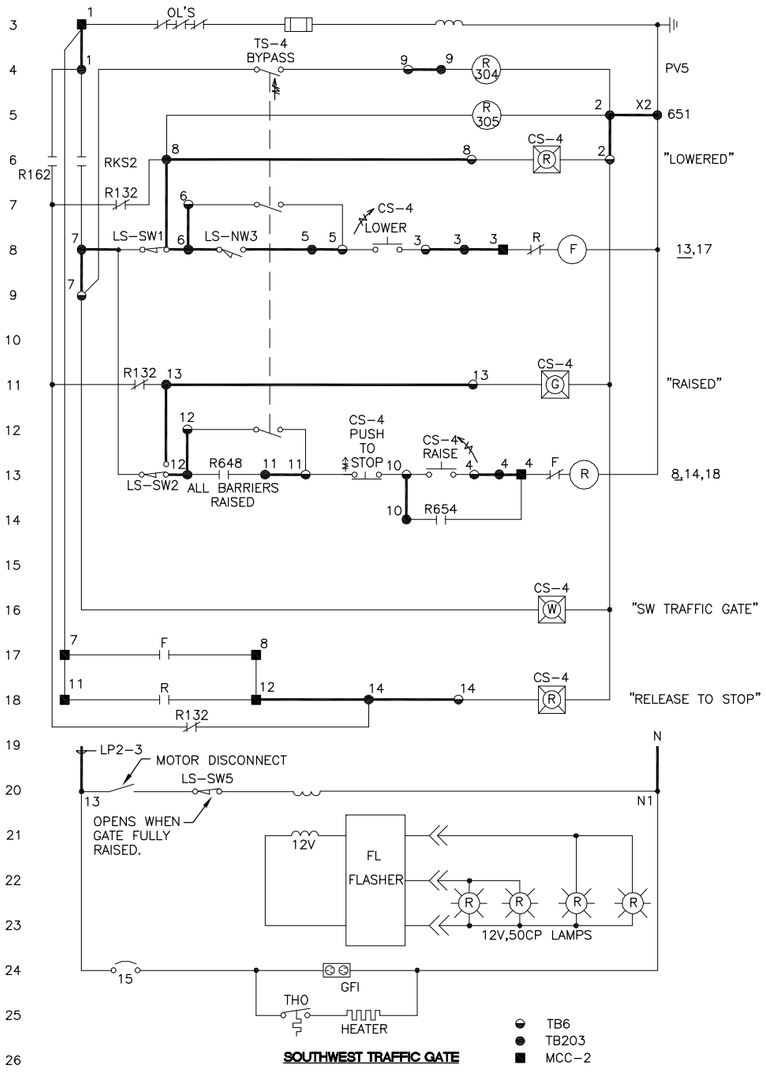

SOUTHWEST TRAFFIC GATE

LIMIT SWITCH CONTACT DEVELOPMENT

CONTACT	FULLY LOWERED	OPERATOR POSITION	FULLY RAISED	FUNCTION THIS DWG OR DWG WHERE CONTACT IS SHOWN
LS-SW1	— — —	———	———	LOWER LIMIT
LS-SW1	———	— — — — — — — —	— — —	IND LIGHT
LS-SW2	———	———	— — —	RAISE LIMIT
LS-SW2	— — —	— — — — — — — —	———	IND LIGHT
LS-SW3	———	— — — — — — — —	— — —	SCH3 LINE 8
LS-SW4	— — —	— — — — — — — —	———	SCH1 LINE 37
LS-SW5	———	———	— — —	LINE 20

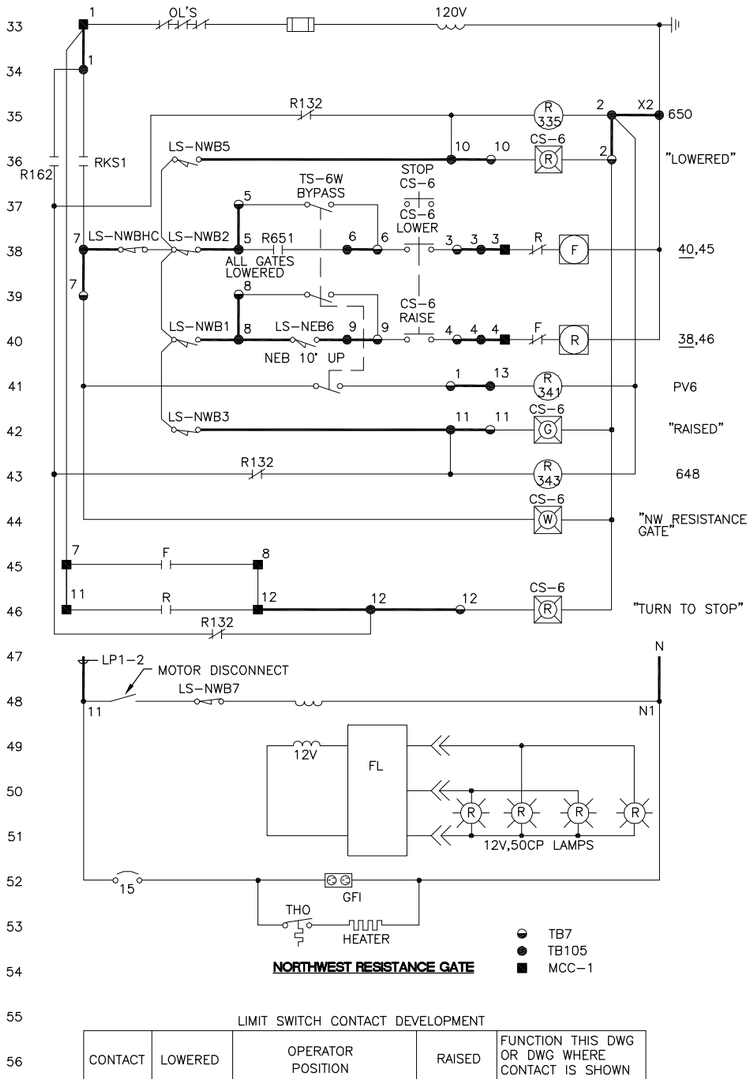

NORTHWEST RESISTANCE GATE

LIMIT SWITCH CONTACT DEVELOPMENT

CONTACT	LOWERED	OPERATOR POSITION	RAISED	FUNCTION THIS DWG OR DWG WHERE CONTACT IS SHOWN
LS-NWB1	———	———	— — —	RAISE LIMIT
LS-NWB2	— — —	———	———	LOWER LIMIT
LS-NWB3	— — —	— — — — — — — —	———	IND LIGHT
LS-NWB4	———	— — — — — — — —	— — —	SPARE
LS-NWB5	———	— — — — — — — —	— — —	IND LIGHT
LS-NWB6	— — —	———	— — —	LINE 68, THIS SHEET
LS-NWB7	— — —	— — — — — — — —	— — —	LINE 48

0° 10° 80° 90°

LS-NWBHC IS HAND CRANK LIMIT SWITCH

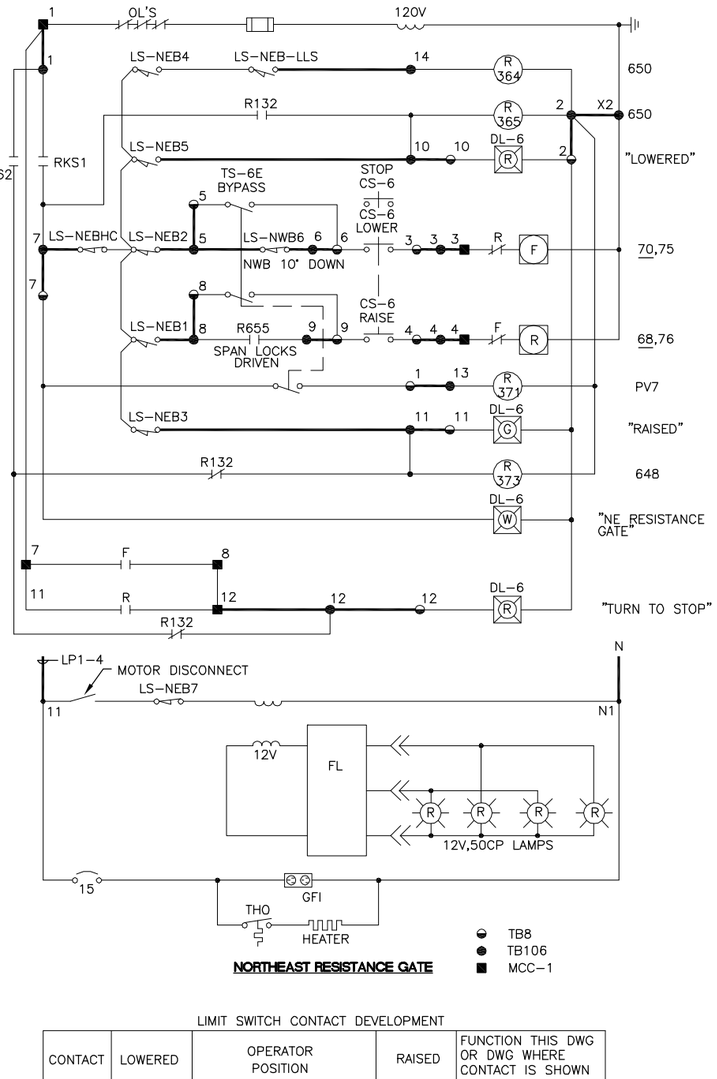

NORTHEAST RESISTANCE GATE

LIMIT SWITCH CONTACT DEVELOPMENT

CONTACT	LOWERED	OPERATOR POSITION	RAISED	FUNCTION THIS DWG OR DWG WHERE CONTACT IS SHOWN
LS-NEB1	———	———	— — —	RAISE LIMIT
LS-NEB2	— — —	———	———	LOWER LIMIT
LS-NEB3	— — —	— — — — — — — —	———	IND LIGHT
LS-NEB4	———	— — — — — — — —	———	DOWN AND LATCH
LS-NEB5	———	———	— — —	IND LIGHT
LS-NEB6	— — —	— — — — — — — —	———	LINE 40, THIS SHEET
LS-NEB7	— — —	———	— — —	LINE 18

0° 10° 80° 90°

LS-NEBHC IS HAND CRANK LIMIT SWITCH

FIELD BOOK:							
SURVEYED:							
SURVEY BASE MAP:							
DESIGN ENTERED:	F. HAYWOOD	4/2009					
DESIGNED	G. PETERS	4/2009					
CHECKED:	R. STEEL	11/2009					
SUPERVISOR:	G. PETERS	01/2010	NUM.	REVISION	BY	DATE	

JOHN G. SCHALLERT — STATE OF WASHINGTON — 45694 — REGISTERED PROFESSIONAL ENGINEER

HNTB

FED. AID No. _____

PROJECT No. 300197

SURVEY No. 32-24-4-22

MAINTENANCE DIVISION No. 3

KING COUNTY DEPT. OF TRANSPORTATION

HAROLD TANIGUCHI, DIRECTOR

SOUTH PARK BRIDGE #3179 REPLACEMENT

SCHEMATIC-3

King County

BE34

SHEET 639 OF 667 SHEETS

316-63 (____)

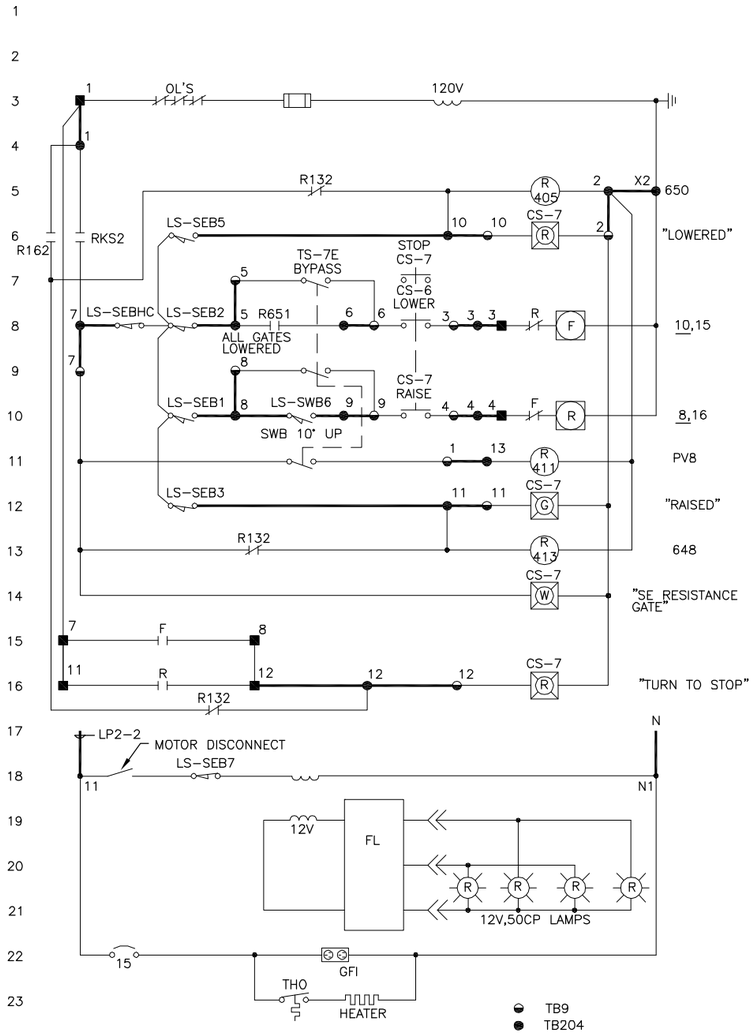

SOUTHEAST RESISTANCE GATE

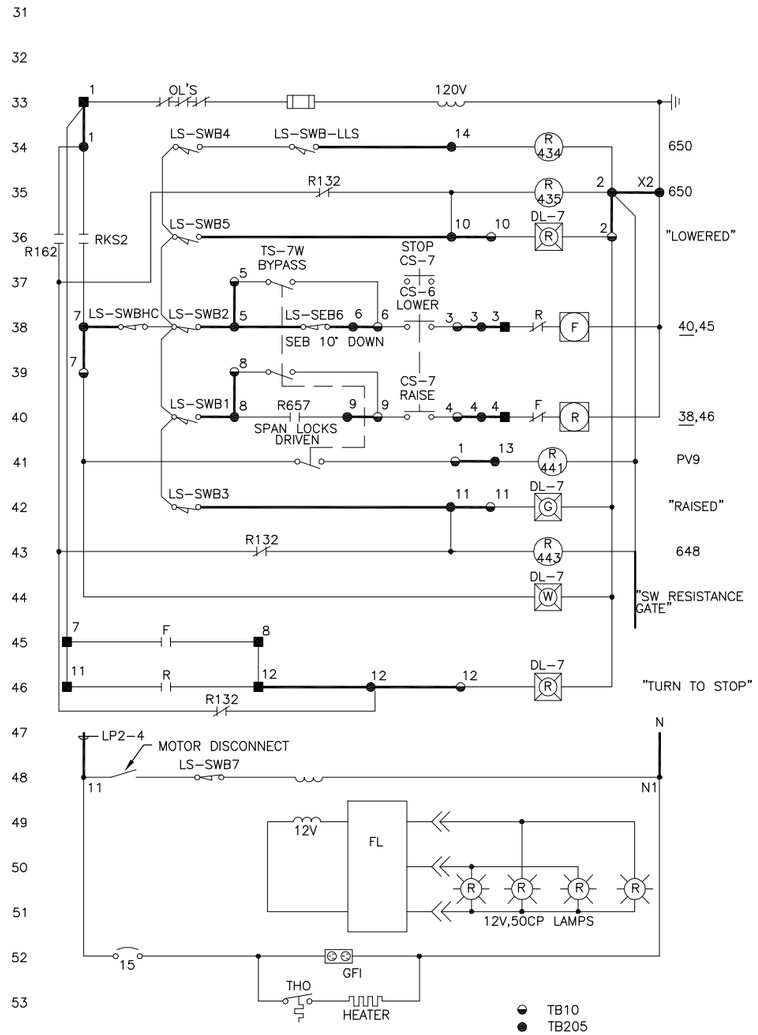

SOUTHWEST RESISTANCE GATE

LIMIT SWITCH CONTACT DEVELOPMENT

CONTACT	LOWERED	OPERATOR POSITION	RAISED	FUNCTION THIS DWG OR DWG WHERE CONTACT IS SHOWN
LS-SEB1				RAISE LIMIT
LS-SEB2				LOWER LIMIT
LS-SEB3				IND LIGHT
LS-SEB4				SPARE
LS-SEB5				IND LIGHT
LS-SEB6				LINE 8, THIS SHEET
LS-SEB7				LINE 48

0° 10° 80° 90°

LS-SEBHC IS HAND CRANK LIMIT SWITCH

LIMIT SWITCH CONTACT DEVELOPMENT

CONTACT	LOWERED	OPERATOR POSITION	RAISED	FUNCTION THIS DWG OR DWG WHERE CONTACT IS SHOWN
LS-SWB1				RAISE LIMIT
LS-SWB2				LOWER LIMIT
LS-SWB3				IND LIGHT
LS-SWB4				DOWN AND LATCH
LS-SWB5				IND LIGHT
LS-SWB6				LINE 40, THIS SHEET
LS-SWB7				LINE 18

0° 10° 80° 90°

LS-SWBHC IS HAND CRANK LIMIT SWITCH

FIELD BOOK:		
SURVEYED:		
SURVEY BASE MAP:		
DESIGN ENTERED:	F. HAYWOOD	4/2009
DESIGNED	G. PETERS	4/2009
CHECKED:	R. STEEL	11/2009
SUPERVISOR:	G. PETERS	01/2010

NUM.	REVISION	BY	DATE

JOHN G. SCHALLERT, STATE OF WASHINGTON, 46094, REGISTERED PROFESSIONAL ENGINEER

HNTB

FED. AID No.

PROJECT No. 300197

SURVEY No. 32-24-4-22

MAINTENANCE DIVISION No. 3

KING COUNTY DEPT. OF TRANSPORTATION

HAROLD TANIGUCHI, DIRECTOR

SOUTH PARK BRIDGE #3179 REPLACEMENT

SCHEMATIC-4

King County

BE35

SHEET 640 OF 667 SHEETS

316-63 (____)

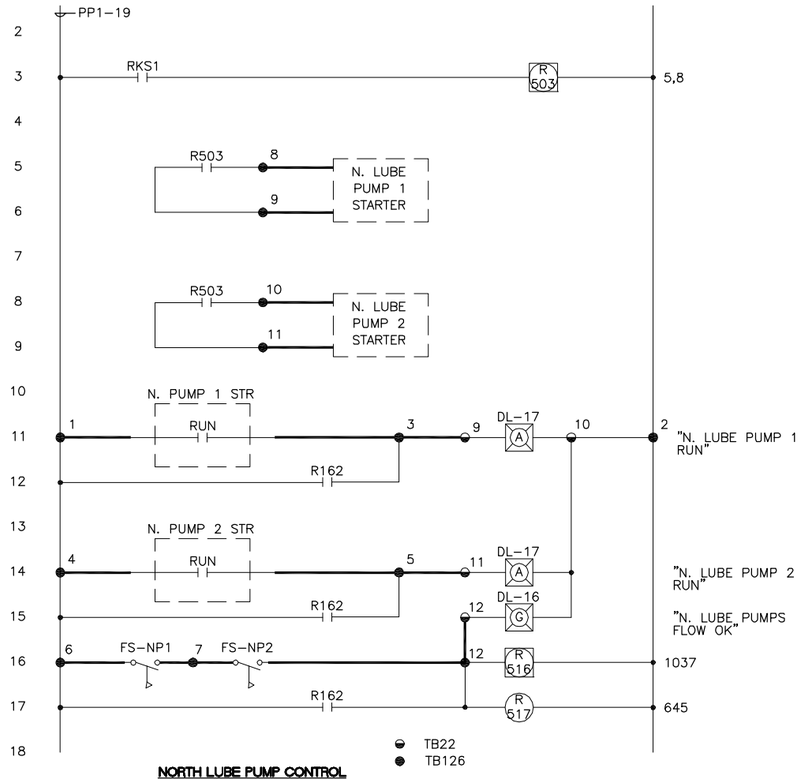

NORTH LUBE PUMP CONTROL

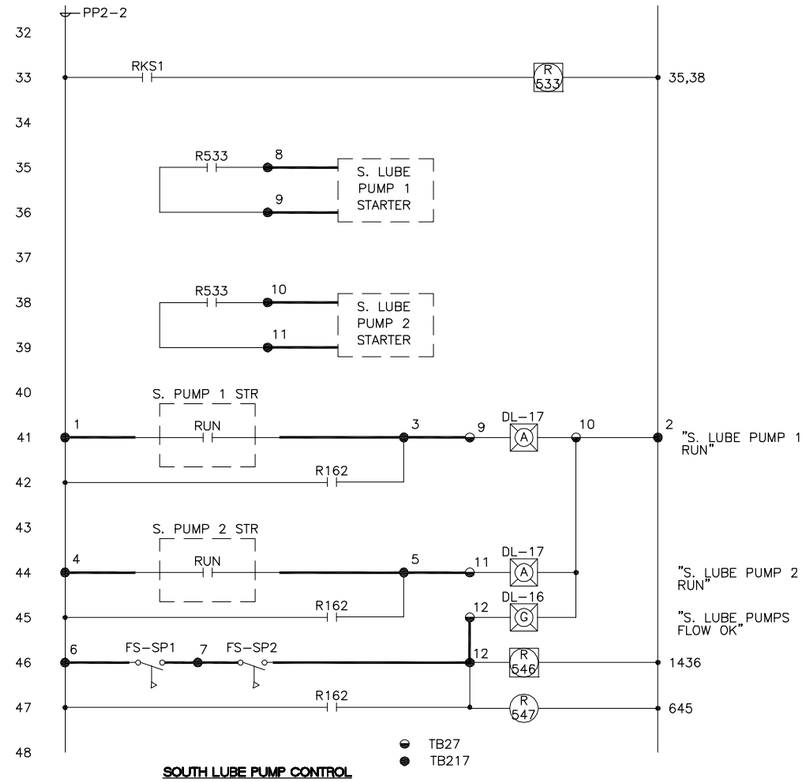

SOUTH LUBE PUMP CONTROL

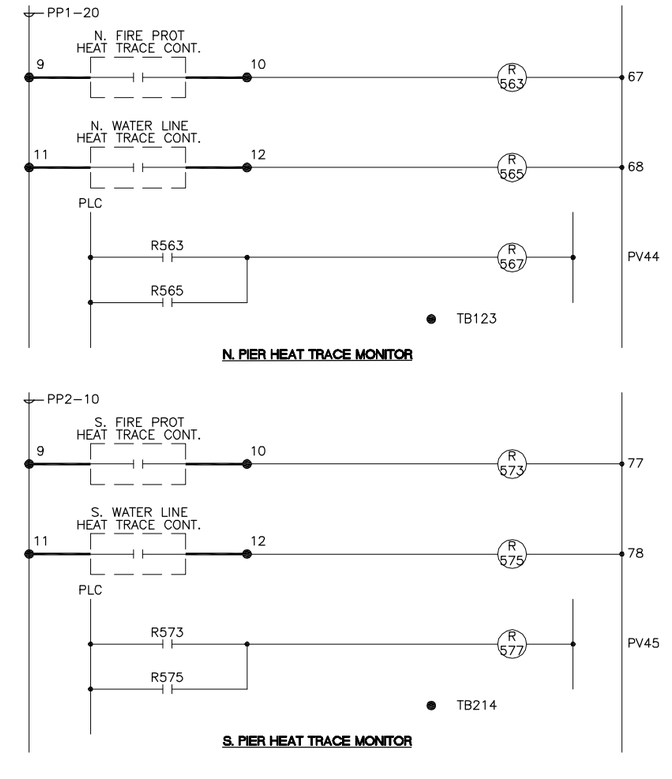

N. PIER HEAT TRACE MONITOR

S. PIER HEAT TRACE MONITOR

FIELD BOOK:					
SURVEYED:					
SURVEY BASE MAP:					
DESIGN ENTERED:	F. HAYWOOD	4/2009			
DESIGNED	G. PETERS	4/2009			
CHECKED:	R. STEEL	11/2009			
SUPERVISOR:	G. PETERS	01/2010	NUM.	REVISION	BY / DATE

JOHN G. SCHALLERT — STATE OF WASHINGTON — 19994 — REGISTERED PROFESSIONAL ENGINEER

HNTB

FED. AID No.

PROJECT No. 300197

SURVEY No. 32-24-4-22

MAINTENANCE DIVISION No. 3

KING COUNTY DEPT. OF TRANSPORTATION

HAROLD TANIGUCHI, DIRECTOR

SOUTH PARK BRIDGE #3179 REPLACEMENT

SCHEMATIC-5

King County

BE36

SHEET 641 OF 667 SHEETS

316-63 (____)

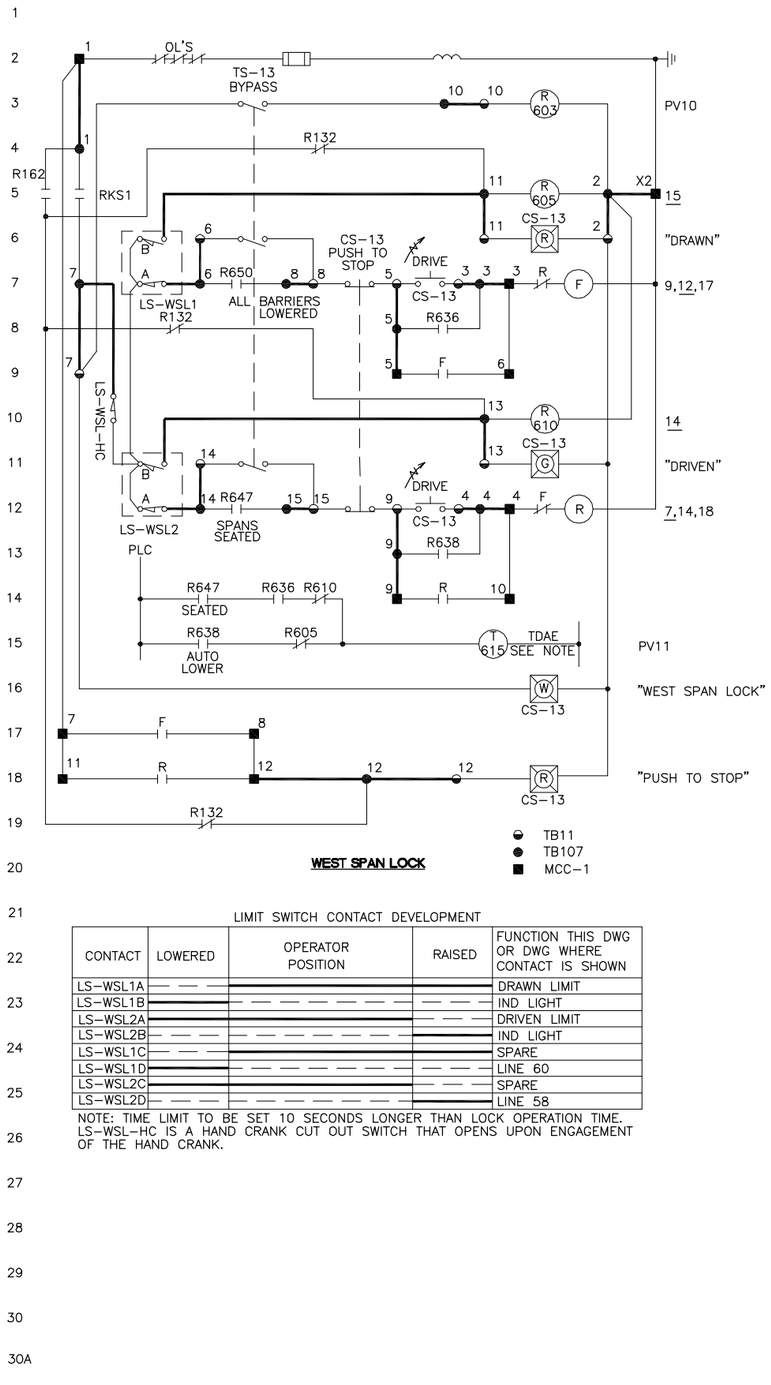

WEST SPAN LOCK

LIMIT SWITCH CONTACT DEVELOPMENT

CONTACT	LOWERED	OPERATOR POSITION	RAISED	FUNCTION THIS DWG OR DWG WHERE CONTACT IS SHOWN
LS-WSL1A	— —	———	———	DRAWN LIMIT
LS-WSL1B	———	— — —	———	IND LIGHT
LS-WSL2A	———	———	— — —	DRIVEN LIMIT
LS-WSL2B	— — —	— — —	———	IND LIGHT
LS-WSL1C	— — —	———	———	SPARE
LS-WSL1D	———	— — —	— — —	LINE 60
LS-WSL2C	———	———	— — —	SPARE
LS-WSL2D	— — —	— — —	———	LINE 58

NOTE: TIME LIMIT TO BE SET 10 SECONDS LONGER THAN LOCK OPERATION TIME. LS-WSL-HC IS A HAND CRANK CUT OUT SWITCH THAT OPENS UPON ENGAGEMENT OF THE HAND CRANK.

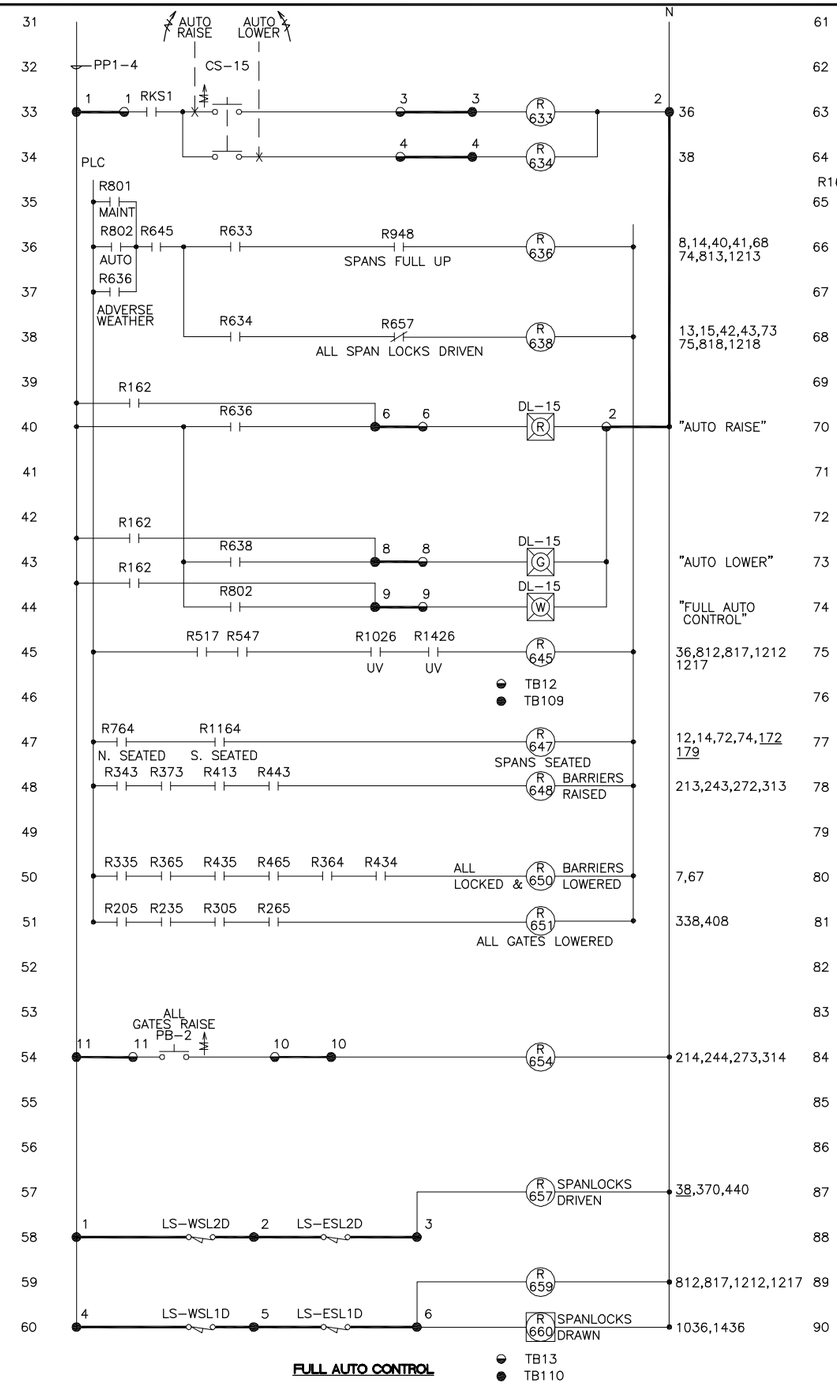

FULL AUTO CONTROL

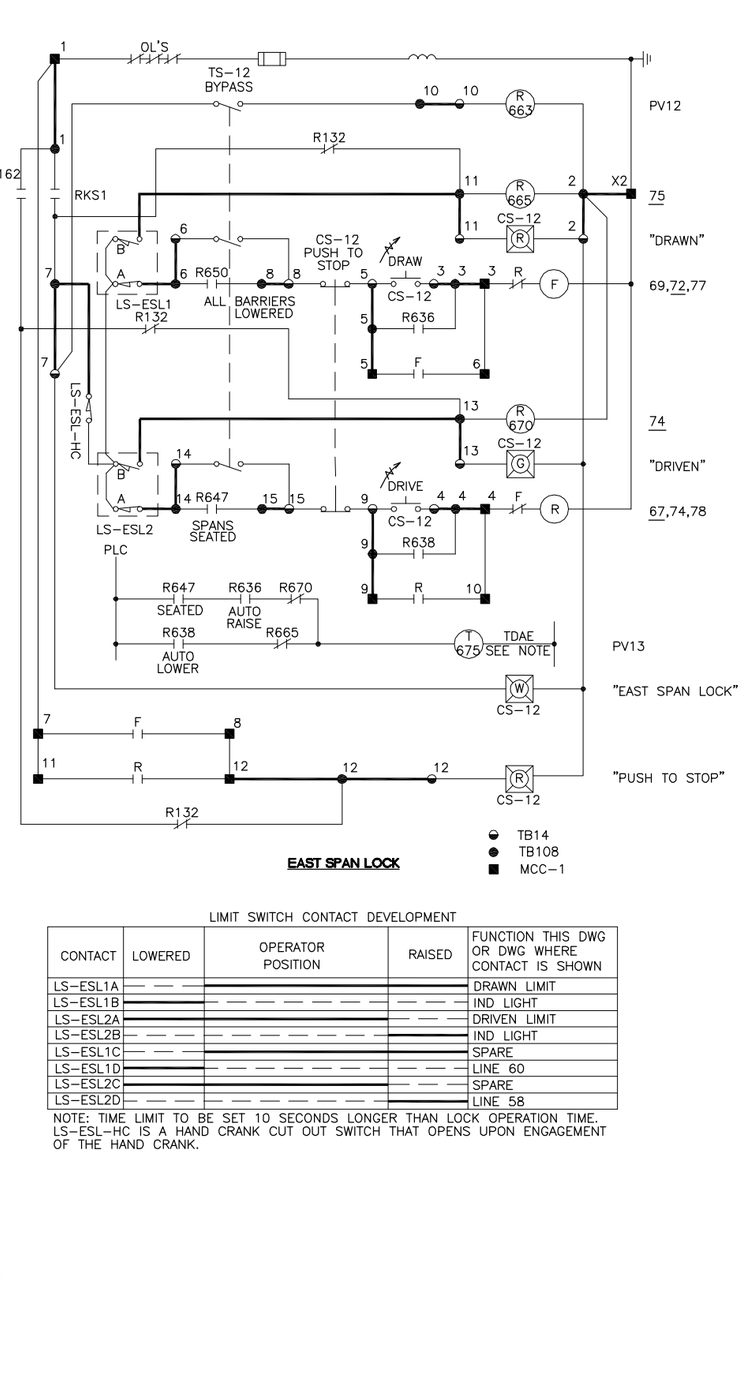

EAST SPAN LOCK

LIMIT SWITCH CONTACT DEVELOPMENT

CONTACT	LOWERED	OPERATOR POSITION	RAISED	FUNCTION THIS DWG OR DWG WHERE CONTACT IS SHOWN
LS-ESL1A	— —	———	———	DRAWN LIMIT
LS-ESL1B	———	— — —	———	IND LIGHT
LS-ESL2A	———	———	— — —	DRIVEN LIMIT
LS-ESL2B	— — —	— — —	———	IND LIGHT
LS-ESL1C	— — —	———	———	SPARE
LS-ESL1D	———	— — —	— — —	LINE 60
LS-ESL2C	———	———	— — —	SPARE
LS-ESL2D	— — —	— — —	———	LINE 58

NOTE: TIME LIMIT TO BE SET 10 SECONDS LONGER THAN LOCK OPERATION TIME. LS-ESL-HC IS A HAND CRANK CUT OUT SWITCH THAT OPENS UPON ENGAGEMENT OF THE HAND CRANK.

FIELD BOOK:				
SURVEYED:				
SURVEY BASE MAP:				
DESIGN ENTERED:	F. HAYWOOD	4/2009		
DESIGNED	G. PETERS	4/2009		
CHECKED:	R. STEEL	11/2009		
SUPERVISOR:	G. PETERS	01/2010		

NUM.	REVISION	BY	DATE

JOHN G. SCHAILERT — STATE OF WASHINGTON — 45094 — REGISTERED PROFESSIONAL ENGINEER

HNTB

FED. AID No.

PROJECT No. 300197

SURVEY No. 32-24-4-22

MAINTENANCE DIVISION No. 3

KING COUNTY DEPT. OF TRANSPORTATION

HAROLD TANIGUCHI, DIRECTOR

SOUTH PARK BRIDGE #3179 REPLACEMENT

SCHEMATIC-6

King County

BE37

SHEET 642 OF 667 SHEETS

316-63 (___)

NOTE:
MOTOR BRAKE SHALL BE MECHANICALLY ADJUSTED TO SET ABOUT 1 SECOND AFTER MACHINERY BRAKE UPON DE-ENERGIZATION.

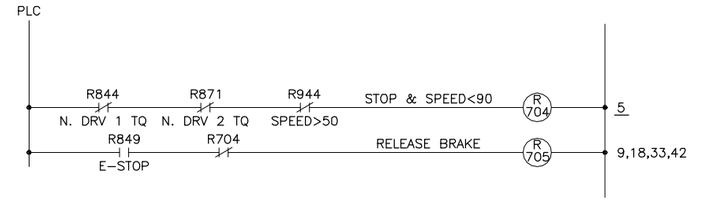

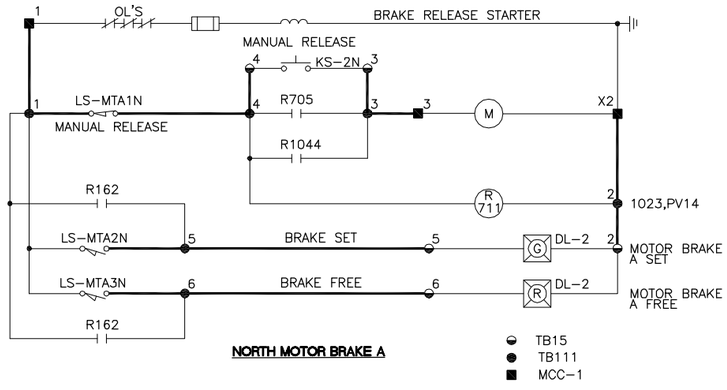

NORTH MOTOR BRAKE A

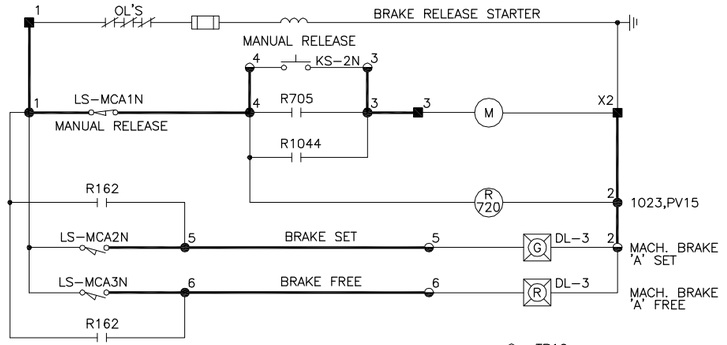

NORTH MACHINERY BRAKE A

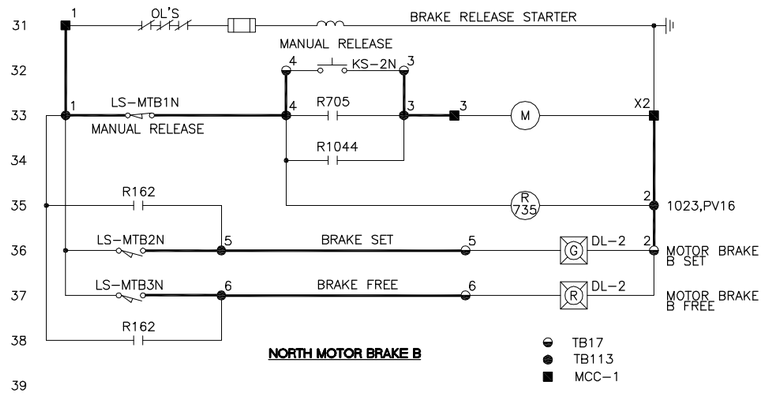

NORTH MOTOR BRAKE B

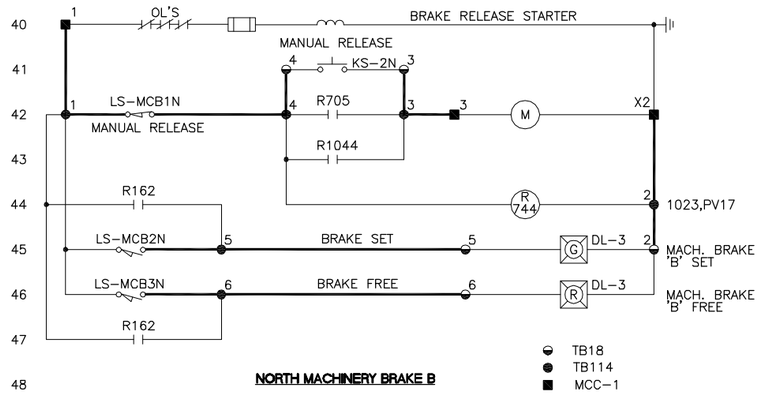

NORTH MACHINERY BRAKE B

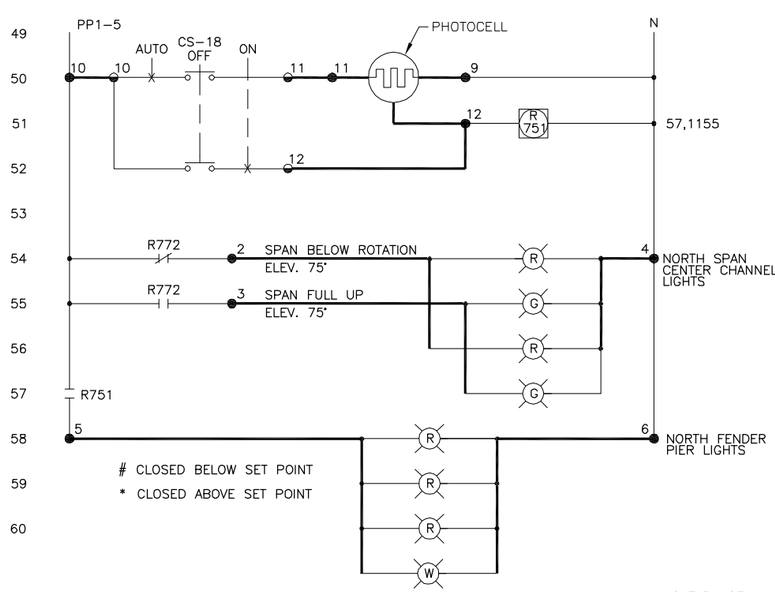

NORTH SIDE NAVIGATION LIGHTS

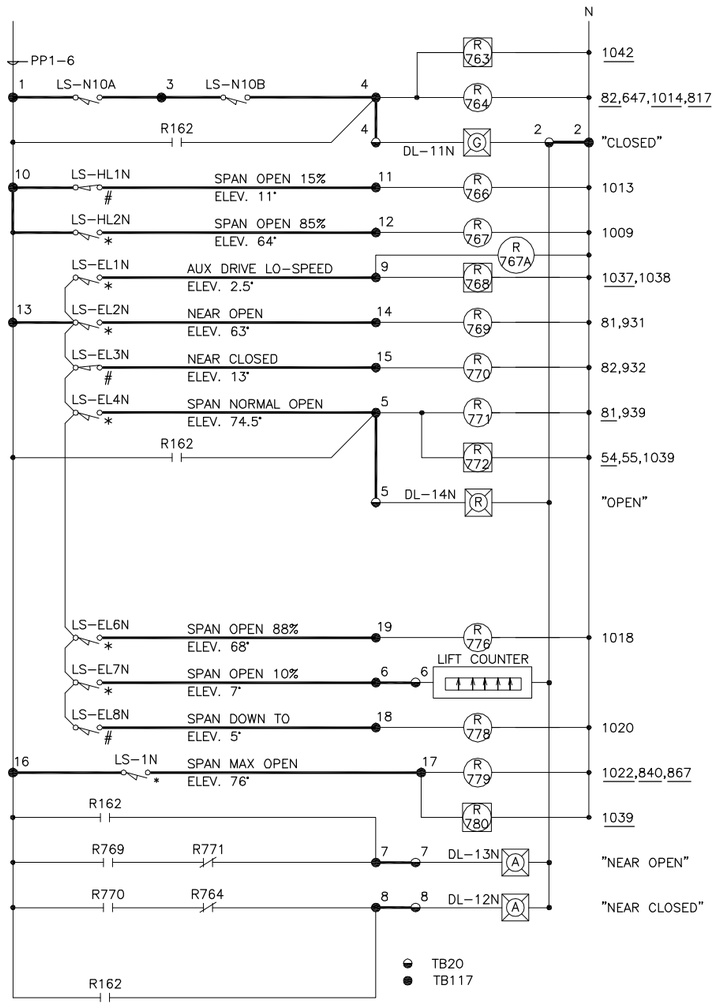

NORTH SPAN POSITION

CLOSED BELOW SET POINT
* CLOSED ABOVE SET POINT

FIELD BOOK:					
SURVEYED:					
SURVEY BASE MAP:					
DESIGN ENTERED:	F. HAYWOOD	4/2009			
DESIGNED	G. PETERS	4/2009			
CHECKED:	R. STEEL	11/2009			
SUPERVISOR:	G. PETERS	01/2010	NUM.	REVISION	BY / DATE

JOHN G. SCHALLERT STATE OF WASHINGTON 45694 REGISTERED PROFESSIONAL ENGINEER

HNTB

FED. AID No.

PROJECT No. 300197

SURVEY No. 32-24-4-22

MAINTENANCE DIVISION No. 3

KING COUNTY DEPT. OF TRANSPORTATION
HAROLD TANIGUCHI, DIRECTOR

SOUTH PARK BRIDGE #3179 REPLACEMENT

SCHEMATIC-7

King County

BE38

SHEET 643 OF 667 SHEETS

316-63 (___)

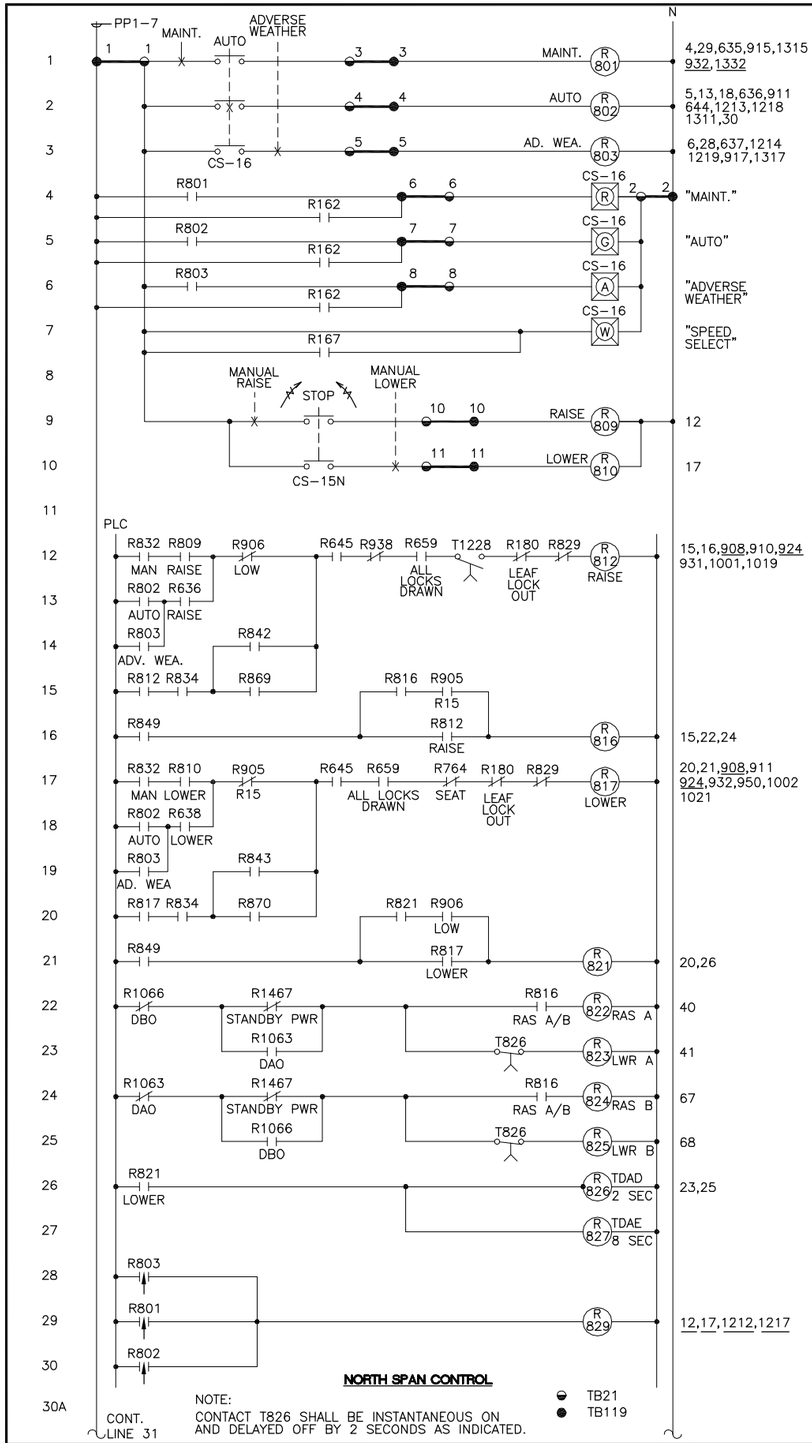

NOTE:

CB-AUX DENOTE AUXILIARY CONTACTS PROVIDED AS PART OF THE MAIN DRIVE CONTROLLER CIRCUIT BREAKER. CONTACT SHALL CLOSE WITH CIRCUIT BREAKER IN THE "OFF" POSITION.

FIELD BOOK:				
SURVEYED:				
SURVEY BASE MAP:				
DESIGN ENTERED:	F. HAYWOOD	4/2009		
DESIGNED	G. PETERS	4/2009		
CHECKED:	R. STEEL	11/2009		
SUPERVISOR:	G. PETERS	01/2010		

NUM.	REVISION	BY	DATE

JOHN G. SCHALEBIT — STATE OF WASHINGTON — 40094 — REGISTERED PROFESSIONAL ENGINEER

HNTB

FED. AID No.

PROJECT No. 300197

SURVEY No. 32-24-4-22

MAINTENANCE DIVISION No. 3

KING COUNTY DEPT. OF TRANSPORTATION
HAROLD TANIGUCHI, DIRECTOR

SOUTH PARK BRIDGE #3179 REPLACEMENT

SCHEMATIC-8

King County

BE39

SHEET 644 OF 667 SHEETS

316-63 (___)

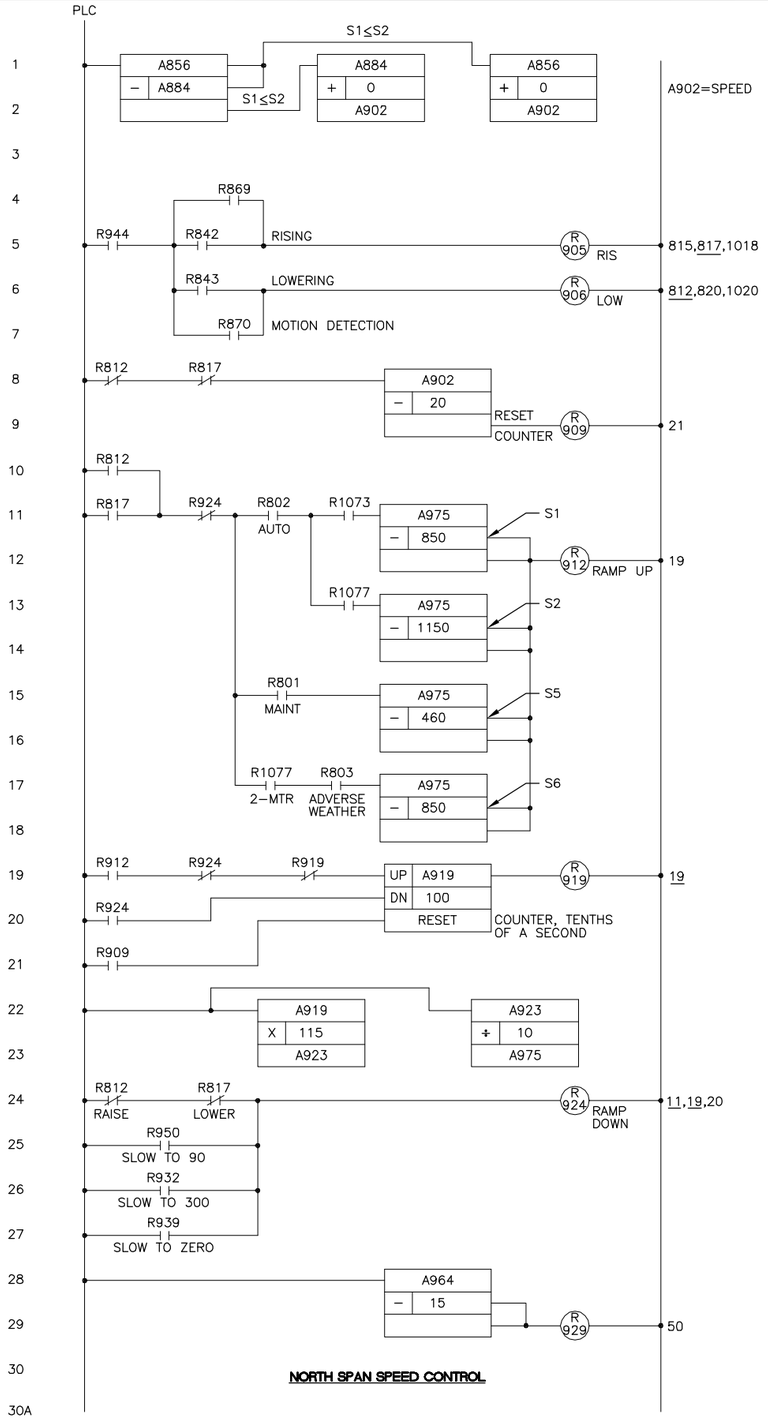

NORTH SPAN SPEED CONTROL

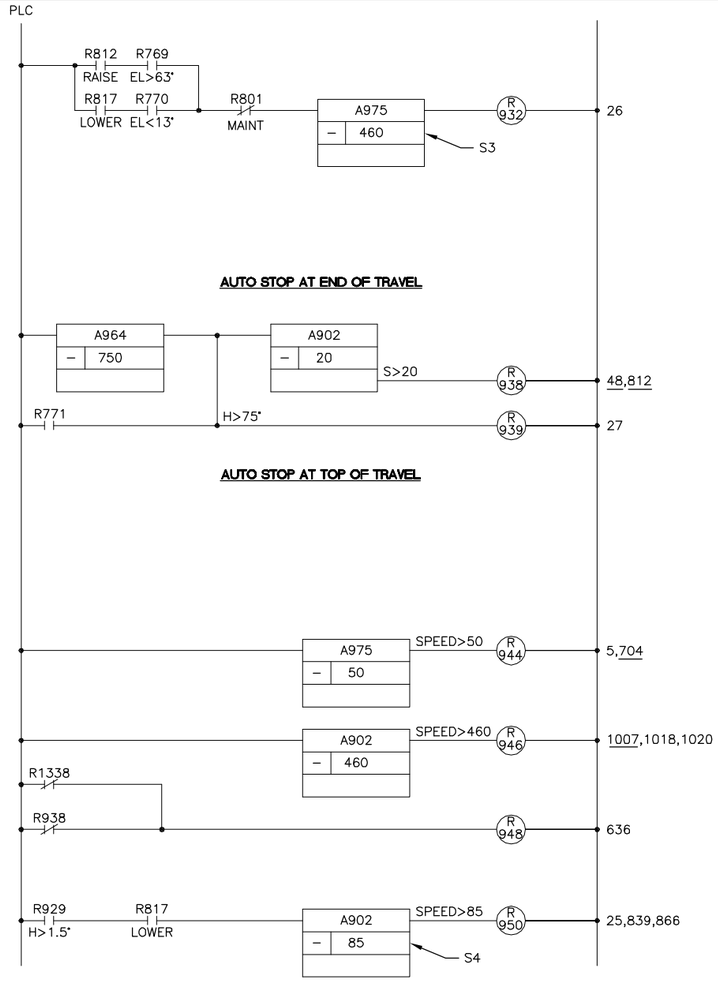

NORTH SPAN SPEED CONTROL

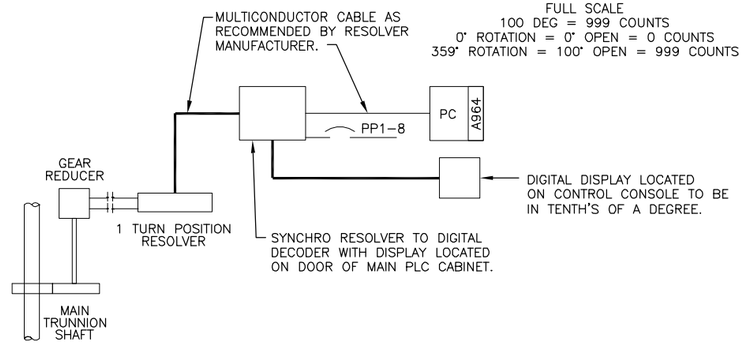

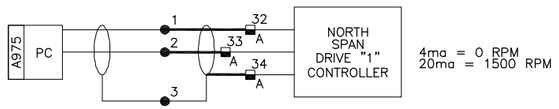

NORTH SPAN DRIVE 1 SPEED CONTROL OUTPUT

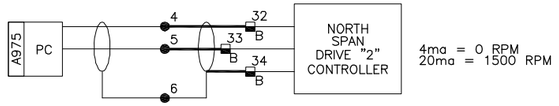

NORTH SPAN DRIVE 2 SPEED CONTROL OUTPUT

- ● TB124
- ⬓A NORTH SPAN DRIVE CONTROLLER 1
- ⬓B NORTH SPAN DRIVE CONTROLLER 2

NOTE:

A902 IS MEASURED SPAN SPEED
A925 IS DESIRED SPAN SPEED
A964 IS MEASURED SPAN POSITION
S1 IS SINGLE MOTOR SPEED (850 RPM)
S2 IS FULL AUTO 2 MOTOR SPEED (1150 RPM)
S3 IS APPROACH SPEED (460 RPM)
S4 IS SEATING SPEED (85 RPM)
S5 IS MAINTENENCE SPEED (460 RPM)
S6 IS TWO MOTOR ADVERSE WEATHER SPEED (850 RPM)

FIELD BOOK:					
SURVEYED:					
SURVEY BASE MAP:					
DESIGN ENTERED:	F. HAYWOOD	4/2009			
DESIGNED	G. PETERS	4/2009			
CHECKED:	R. STEEL	11/2009			
SUPERVISOR:	G. PETERS	01/2010	NUM.	REVISION	BY / DATE

JOHN G. SCHALEKAMP — STATE OF WASHINGTON — 45094 — REGISTERED PROFESSIONAL ENGINEER

HNTB

FED. AID No.

PROJECT No. 300197

SURVEY No. 32-24-4-22

MAINTENANCE DIVISION No. 3

KING COUNTY DEPT. OF TRANSPORTATION
HAROLD TANIGUCHI, DIRECTOR

SOUTH PARK BRIDGE #3179 REPLACEMENT

SCHEMATIC–9

King County

BE40

SHEET 645 OF 667 SHEETS

316-63 (___)

PLC

R812 RAISE
R817 LOWER
A902 – 80
SPEED < 5% 2 SEC
T 1002
24,PV20

A902 X 100 A1004
R 1003
5

R1003
A1004 % A675 A1006
R 1005
7

R1005 R946
A1006 – 120
ACTUAL SPEED / DESIRED SPEED > 120%
R 1007
24,PV21

R767
A964 – 633
CALIBRATION ERROR > 1% AT 64"
R 1010
PV22

A964 – 647

R766
A964 – 107
CALIBRATION ERROR > 1% AT 11"
R764
R 1014
17,22,PV23

A964 – 113

R1014

R905 RIS
R946 S>460
R776 ELEV 68"
20% OVERSPEED
R 1018
24,PV24

R812 RAISE
R906 LOW
R946 S>460
R778 ELEV 7"
R817 LOWER

R779 ELEV 76"
R160 øREV
R1014
R849
R 1022 NUV1
24

R711
R720
R735
R744
R 1023 NUV2
24

R845
R1066
T1002
R1007
R1018
R1022 NUV1
R1023 NUV2
R 1024 2 SEC
26

R872
R1063

T1024
NORTH SPAN RUN SAFETY
R 1026 NUV
645,PV25

OL'S
HIGH CAPACITY CPT
MAIN DRIVE BYPASS
RKS1 BRIDGE CONTROL
EMERG STOP PB-3
TS-14
DL-10 (A)
"NORTH AUXILIARY DRIVE READY"
R166
R 1033
X2
PV26
R 1034
MACHINE TOOL RELAY
47

R1081 N. SPAN
R1083 BOTH SPANS
16 25 B
BC
26 15 25 B A
AC
26 A

R660
R516
R768
L
38
R768
H
37

PUSH TO STOP
RAISE
R771 FULL OPEN
R780 MAX OPEN
CS-20
F
40,42,44,50

LOWER
R763 FULL OPEN
R780 MAX OPEN
CS-20
CS-20
R
39,43,45,50

17 7 F 8 10 R166
R 1044
710,719,734,743
11 R 12 10
R (A) DL-10
"NORTH AUXILIARY DRIVE RUN"
R166

R1034
AC / DC
+ 115V DC TO CLUTCH –

LP1-6
17 F 18 19 R 20 MTR HTR 21
N

TB25
TB125
MCC-1
A NORTH SPAN DRIVE CONTROLLER 1
B NORTH SPAN DRIVE CONTROLLER 2

NORTH AUXILIARY DRIVE

FROM SCHEM. 6 LINE 60
PP1-9
N

MOTOR 1
MOTOR 2
MOTORS 1&2
R162
R 1063 DAO
25,824,823,1425,1224,1223
CS-17 (A)
"MOTOR 1"
CS-17 (G)
"MTRS. 1&2"
R167
R 1066 DBO
24,822,825,1424,1222,1225
CS-17 R162
CS-17 (A)
"MOTOR 2"
R167
CS-17 (W)
"SPAN MOTOR SELECT"

SPAN MOTOR SELECTOR
TB26
TB115

NORTH SUMP PUMP
HIGH LEVEL
R 1070
PV27

PLC

R842
R843
R869
R870
R1077 2-MTR
1-MTR
R 1073
911

R842 R869
R843 R870
2-MTR
R 1077
73,913,917

NORTH SPAN
SOUTH SPAN
BOTH SPANS
CS-19 (A)
"NORTH SPAN"
R162
R 1081
34
CS-19 (G)
"BOTH SPANS"
R162
R 1083
35,1435
CS-19 (A)
"SOUTH SPAN"
CS-19
R162
R 1085
1434
CS-19 (W)
"SPAN SELECT"
R167

SPAN SELECT
TB26
TB115

CONT. ON SCH. 12 LINE 31

FIELD BOOK:					
SURVEYED:					
SURVEY BASE MAP:					
DESIGN ENTERED:	F. HAYWOOD	4/2009			
DESIGNED	G. PETERS	4/2009			
CHECKED:	R. STEEL	11/2009			
SUPERVISOR:	G. PETERS	01/2010	NUM.	REVISION	BY / DATE

JOHN G. SCHAILERT STATE OF WASHINGTON 45094 REGISTERED PROFESSIONAL ENGINEER

HNTB

FED. AID No.
PROJECT No. 300197
SURVEY No. 32-24-4-22
MAINTENANCE DIVISION No. 3

KING COUNTY DEPT. OF TRANSPORTATION
HAROLD TANIGUCHI, DIRECTOR
SOUTH PARK BRIDGE #3179 REPLACEMENT
SCHEMATIC-10

King County

BE41
SHEET 646 OF 667 SHEETS
316-63 (___)

NOTE:
MOTOR BRAKE SHALL BE MECHANICALLY ADJUSTED TO SET ABOUT 1 SECOND AFTER MACHINERY BRAKE UPON DE-ENERGIZATION.

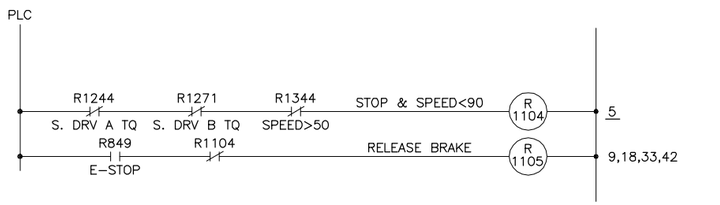

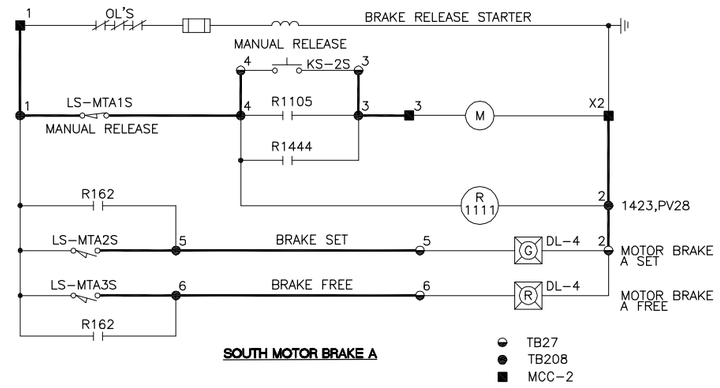

SOUTH MOTOR BRAKE A

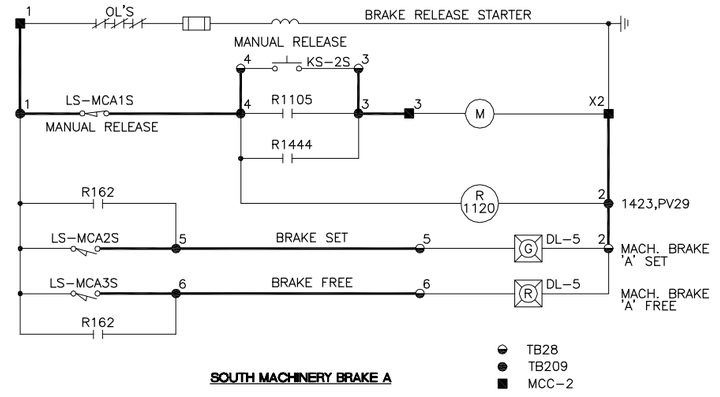

SOUTH MACHINERY BRAKE A

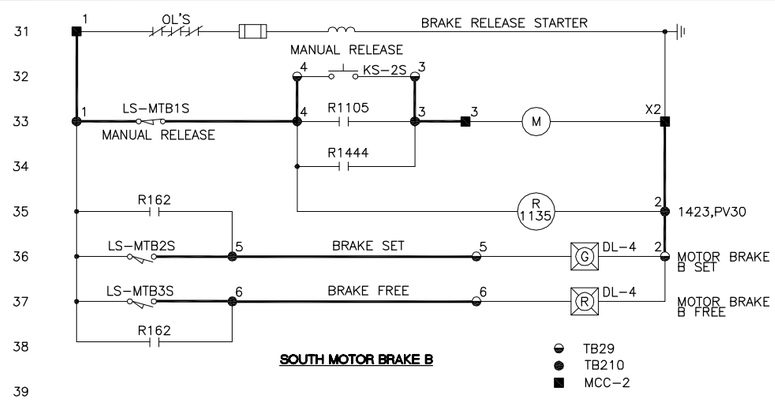

SOUTH MOTOR BRAKE B

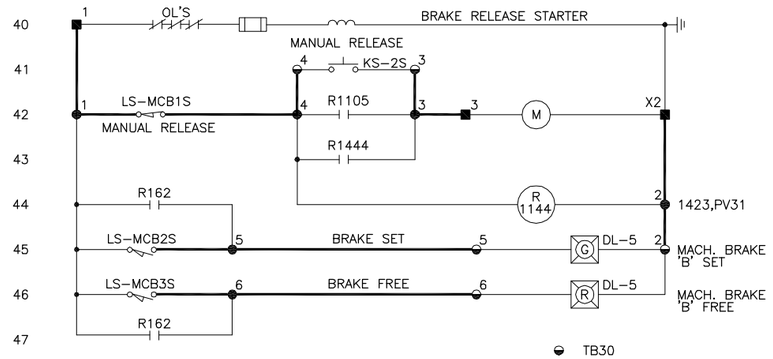

SOUTH MACHINERY BRAKE B

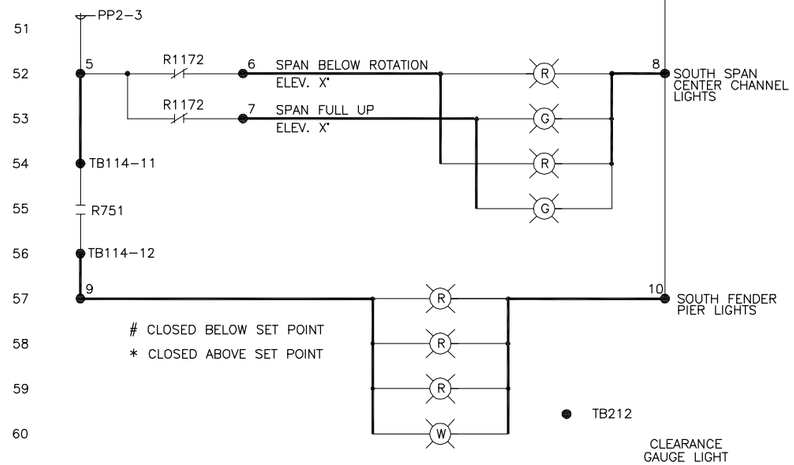

SOUTH SIDE NAVIGATION LIGHTS

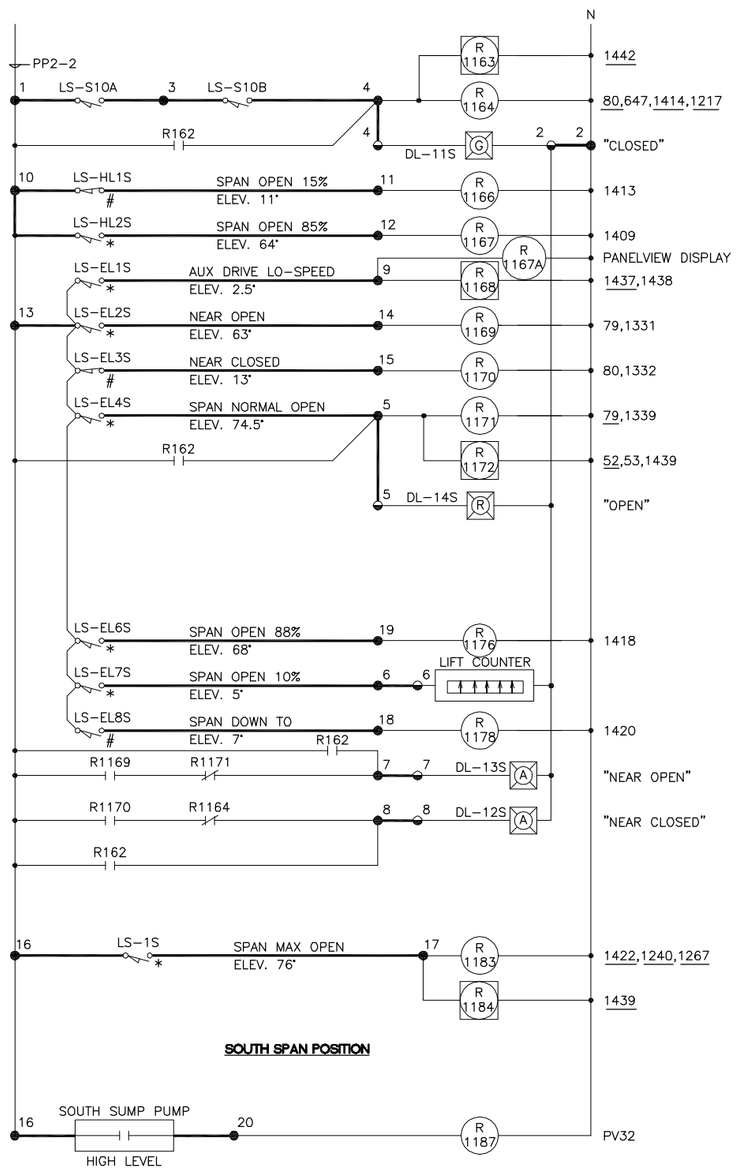

FIELD BOOK:					
SURVEYED:					
SURVEY BASE MAP:					
DESIGN ENTERED:	F. HAYWOOD	4/2009			
DESIGNED	G. PETERS	4/2009			
CHECKED:	R. STEEL	11/2009			
SUPERVISOR:	G. PETERS	01/2010	NUM.	REVISION	BY / DATE

JOHN G. SCHALLERT — STATE OF WASHINGTON — 45694 — REGISTERED PROFESSIONAL ENGINEER

HNTB

FED. AID No.

PROJECT No. 300197

SURVEY No. 32-24-4-22

MAINTENANCE DIVISION No. 3

KING COUNTY DEPT. OF TRANSPORTATION
HAROLD TANIGUCHI, DIRECTOR

SOUTH PARK BRIDGE #3179 REPLACEMENT

SCHEMATIC-11

King County

BE42

SHEET 647 OF 667 SHEETS

316-63 (___)

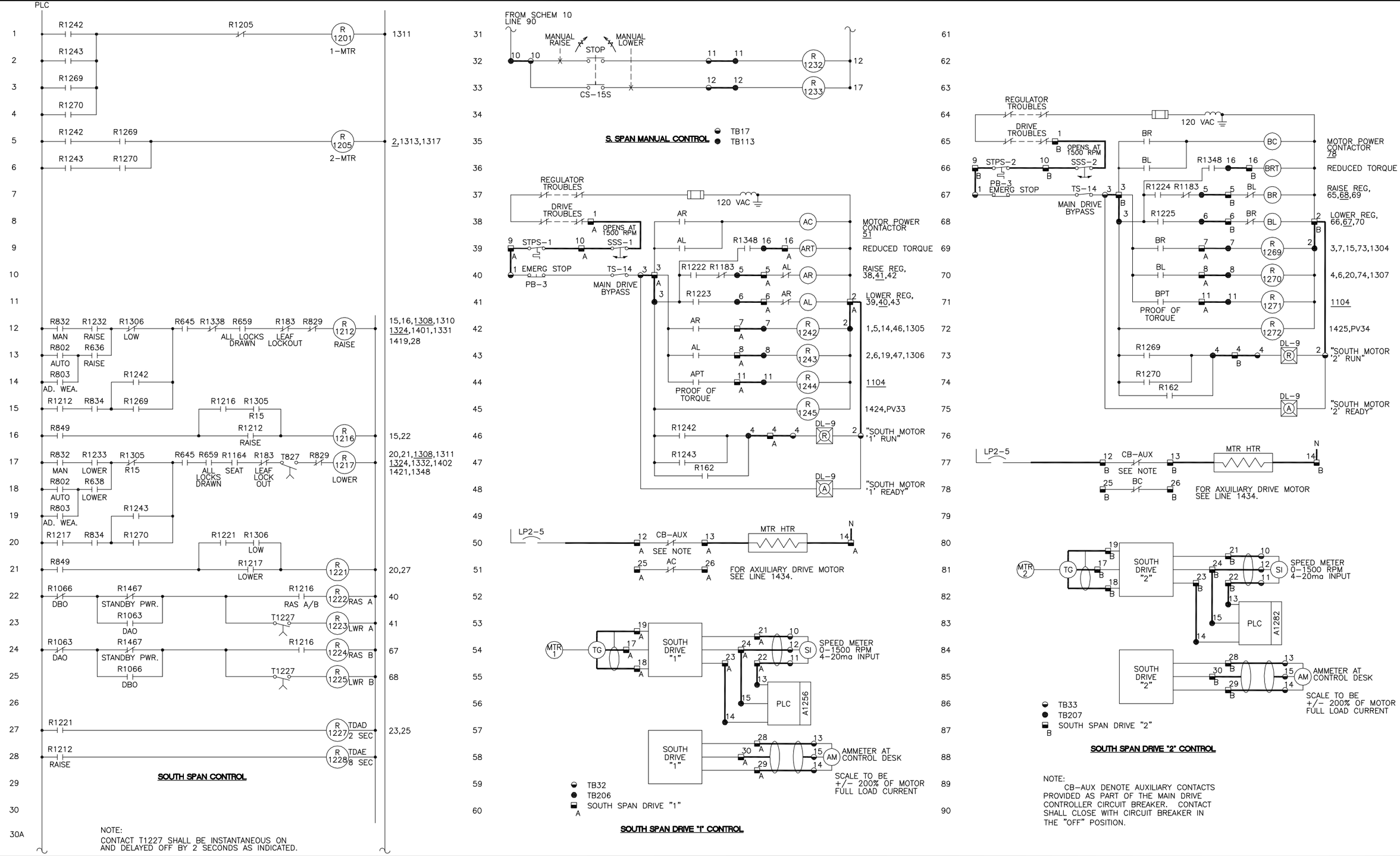

FIELD BOOK:					
SURVEYED:					
SURVEY BASE MAP:					
DESIGN ENTERED:	F. HAYWOOD	4/2009			
DESIGNED	G. PETERS	4/2009			
CHECKED:	R. STEEL	11/2009			
SUPERVISOR:	G. PETERS	01/2010	NUM.	REVISION	BY / DATE

JOHN G. SCHALLERT — STATE OF WASHINGTON — 45694 — REGISTERED PROFESSIONAL ENGINEER

HNTB

FED. AID No.

PROJECT No. 300197

SURVEY No. 32-24-4-22

MAINTENANCE DIVISION No. 3

KING COUNTY DEPT. OF TRANSPORTATION
HAROLD TANIGUCHI, DIRECTOR

SOUTH PARK BRIDGE #3179 REPLACEMENT

SCHEMATIC-12

King County

BE43

SHEET 648 OF 667 SHEETS

316-63 (___)

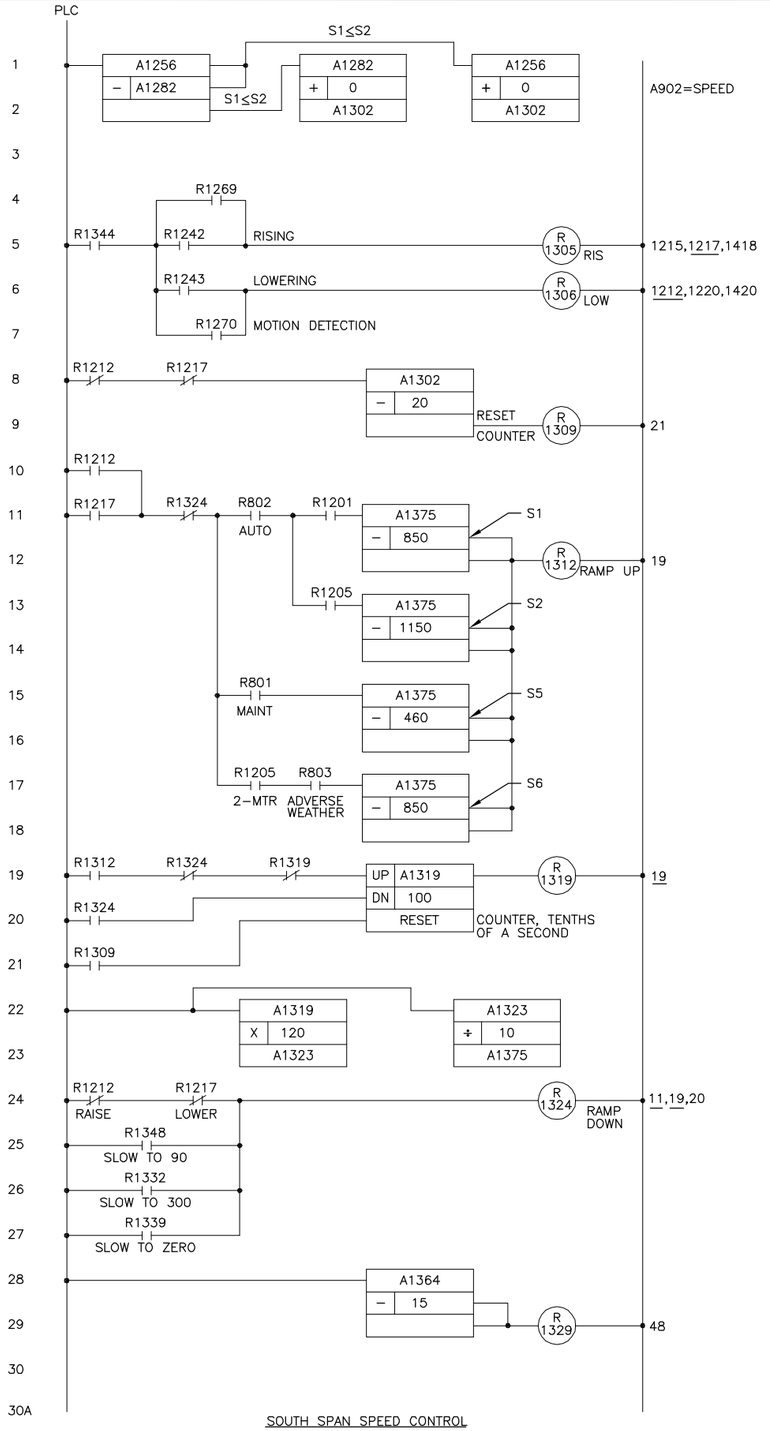

SOUTH SPAN SPEED CONTROL

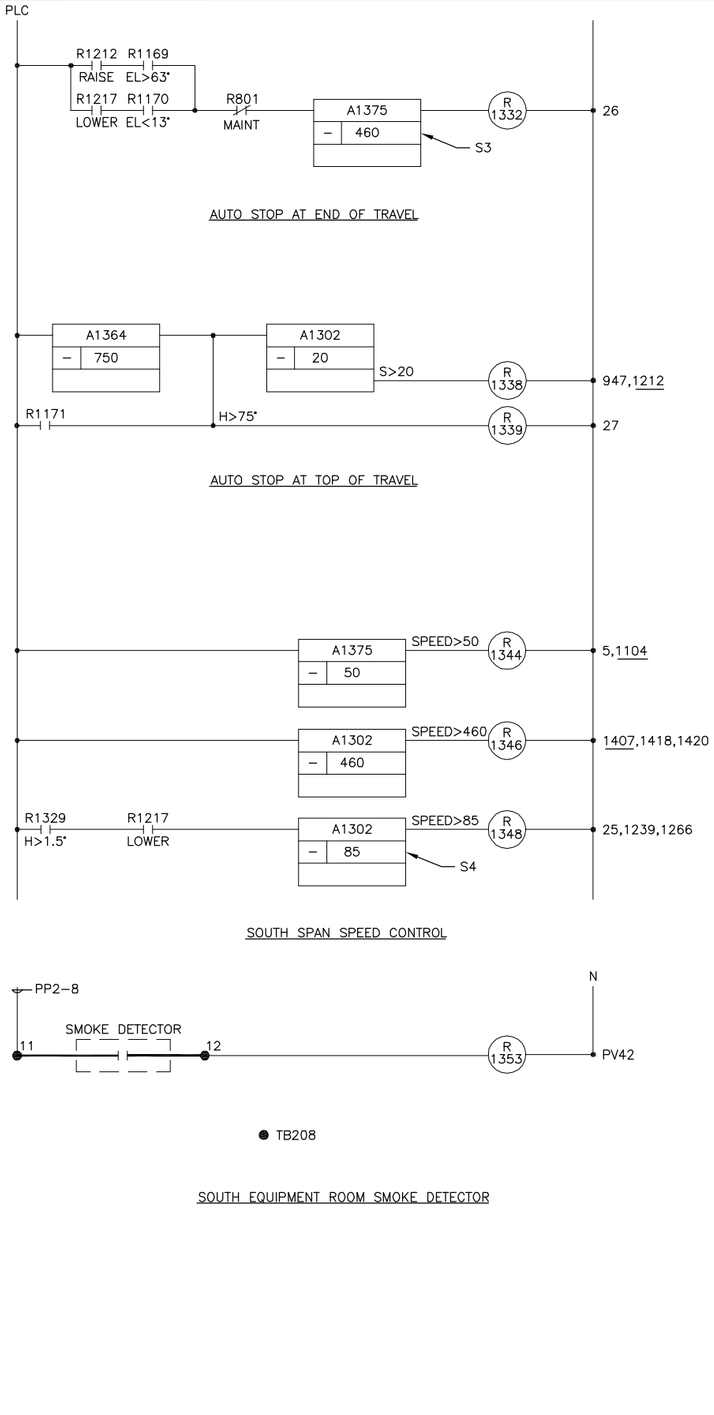

AUTO STOP AT END OF TRAVEL

AUTO STOP AT TOP OF TRAVEL

SOUTH SPAN SPEED CONTROL

SOUTH EQUIPMENT ROOM SMOKE DETECTOR

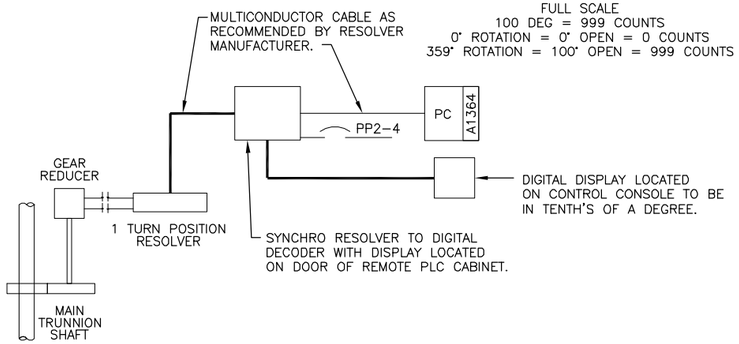

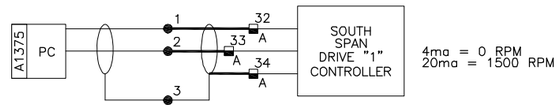

SOUTH SPAN DRIVE 1 SPEED CONTROL OUTPUT

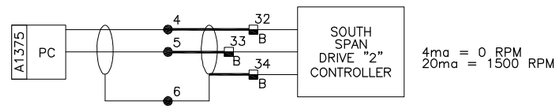

SOUTH SPAN DRIVE 2 SPEED CONTROL OUTPUT

● TB215
A SOUTH SPAN DRIVE CONTROLLER 1
B SOUTH SPAN DRIVE CONTROLLER 2

NOTE:

A1302 IS MEASURED SPAN SPEED
A1375 IS DESIRED SPAN SPEED
A1364 IS MEASURED SPAN POSITION
S1 IS SINGLE MOTOR SPEED (850 RPM)
S2 IS FULL AUTO 2 MOTOR SPEED (1150 RPM)
S3 IS APPROACH SPEED (460 RPM)
S4 IS SEATING SPEED (85 RPM)
S5 IS MAINTENENCE SPEED (460 RPM)
S6 IS TWO MOTOR ADVERSE WEATHER SPEED (850 RPM)

FIELD BOOK:					
SURVEYED:					
SURVEY BASE MAP:					
DESIGN ENTERED:	F. HAYWOOD	4/2009			
DESIGNED	G. PETERS	4/2009			
CHECKED:	R. STEEL	11/2009			
SUPERVISOR:	G. PETERS	01/2010	NUM.	REVISION	BY / DATE

JOHN G. SCHALLERT — STATE OF WASHINGTON — 40004 — REGISTERED PROFESSIONAL ENGINEER

HNTB

FED. AID No. _____

PROJECT No. 300197

SURVEY No. 32-24-4-22

MAINTENANCE DIVISION No. 3

KING COUNTY DEPT. OF TRANSPORTATION
HAROLD TANIGUCHI, DIRECTOR

SOUTH PARK BRIDGE #3179 REPLACEMENT

SCHEMATIC–13

King County

BE44

SHEET 649 OF 667 SHEETS

316-63 (___)

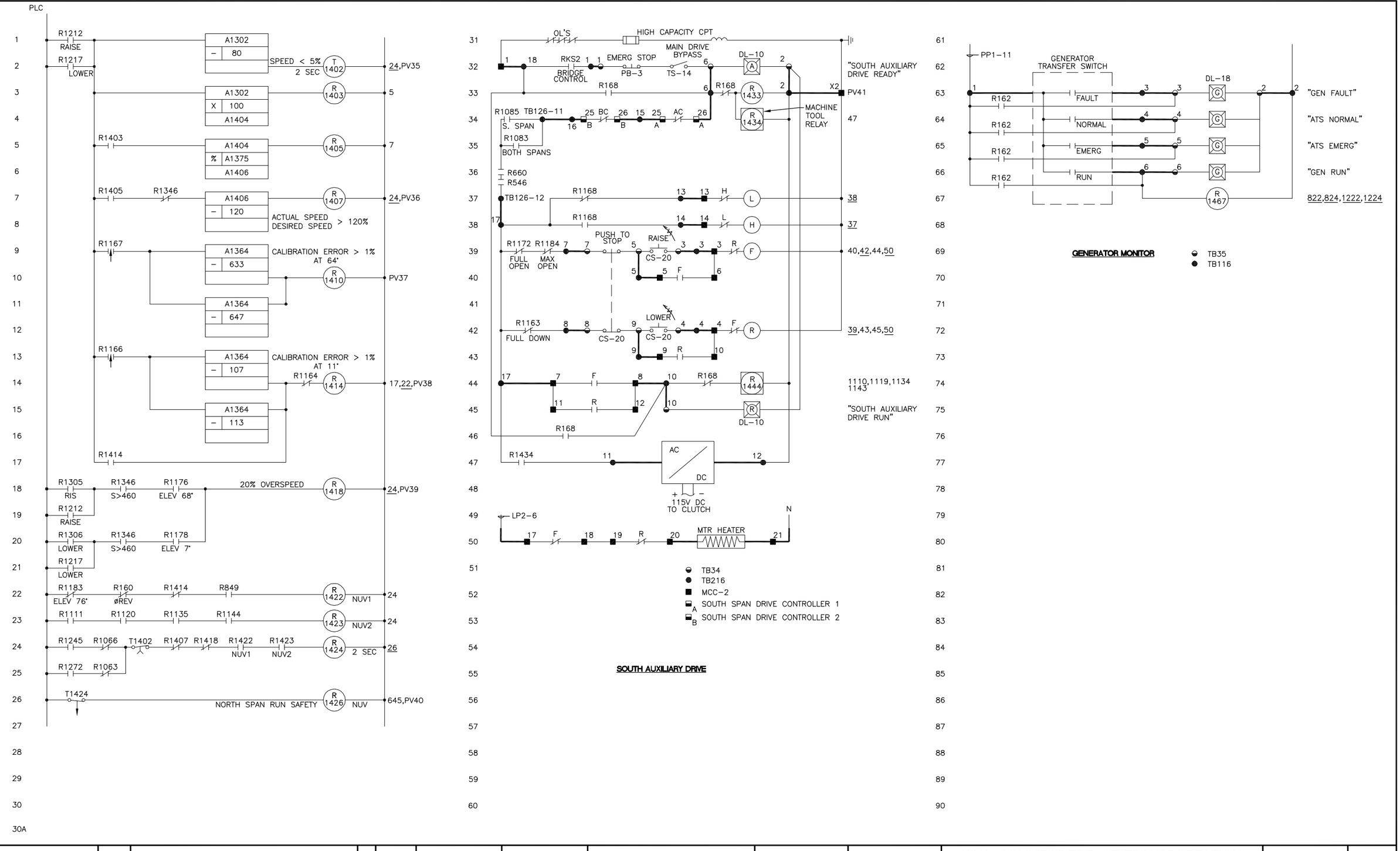

FIELD BOOK:					
SURVEYED:					
SURVEY BASE MAP:					
DESIGN ENTERED:	F. HAYWOOD	4/2009			
DESIGNED	G. PETERS	4/2009			
CHECKED:	R. STEEL	11/2009			
SUPERVISOR:	G. PETERS	01/2010	NUM.	REVISION	BY / DATE

JOHN G. SCHAILERET · STATE OF WASHINGTON · 45094 · REGISTERED PROFESSIONAL ENGINEER

HNTB

FED. AID No.

PROJECT No. 300197

SURVEY No. 32-24-4-22

MAINTENANCE DIVISION No. 3

KING COUNTY DEPT. OF TRANSPORTATION
HAROLD TANIGUCHI, DIRECTOR

SOUTH PARK BRIDGE #3179 REPLACEMENT

SCHEMATIC-14

King County

BE45

SHEET 650 OF 667 SHEETS

316-63 (___)

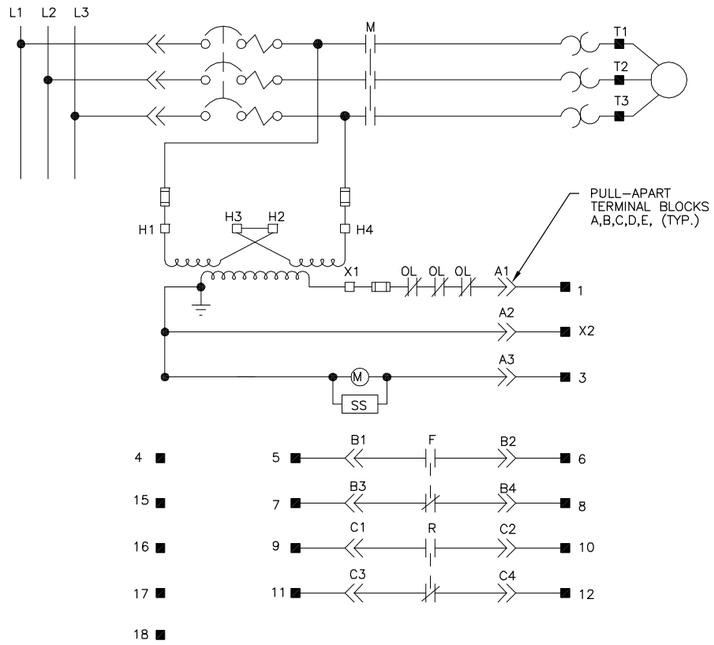

MOTOR STARTER
WIRING DIAGRAM
FULL VOLTAGE NON-REVERSING

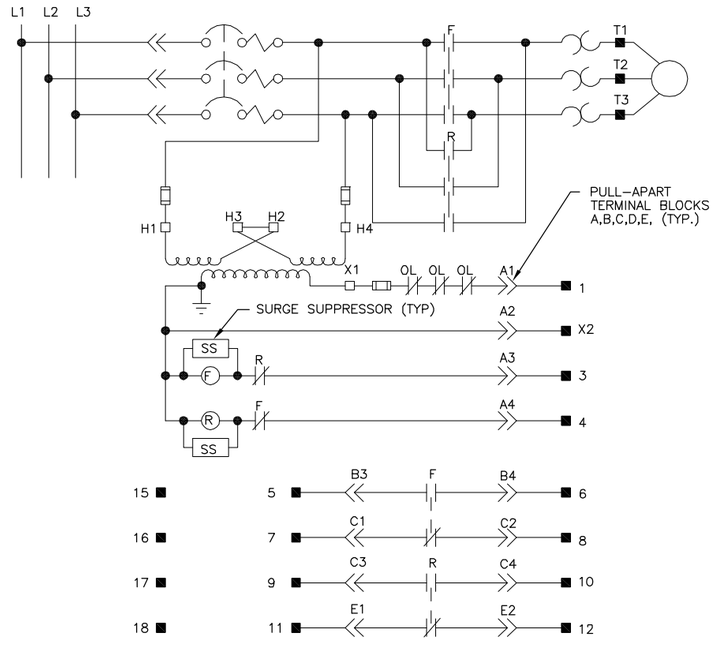

MOTOR STARTER
WIRING DIAGRAM
FULL VOLTAGE REVERSING

PANELVIEW ALARM LIST	
ALARM NO.	ALARM DISPLAY
PV1	TRAFFIC SIGNAL BYPASS SELECTED
PV2	PHASE LOSS/ PHASE REVERSAL DETECTED
PV3	N.W. TRAFFIC GATE BYPASS SELECTED
PV4	S.E. TRAFFIC GATE BYPASS SELECTED
PV5	S.W. TRAFFIC GATE BYPASS SELECTED
PV6	N.W. RESISTANCE GATE BYPASS SELECTED
PV7	N.E. RESISTANCE GATE BYPASS SELECTED
PV8	S.E. RESISTANCE GATE BYPASS SELECTED
PV9	S.W. RESISTANCE GATE BYPASS SELECTED
PV10	W. SPANLOCK BYPASS SELECTED
PV11	W. SPANLOCK NOT DRAWN OR DRIVEN
PV12	E. SPANLOCK BYPASS SELECTED
PV13	E. SPANLOCK NOT DRAWN OR DRIVEN
PV14	N. MOTOR BRAKE A HAND RELEASED
PV15	N. MACHINERY BRAKE A HAND RELEASED
PV16	N. MOTOR BRAKE B HAND RELEASED
PV17	N. MACHINERY BRAKE B HAND RELEASED
PV18	N. SPAN DRIVE A OUT OF SERVICE
PV19	N. SPAN DRIVE B OUT OF SERVICE
PV20	N. SPAN STALLED
PV21	N. SPAN CALCULATED OVERSPEED
PV22	N. SPAN CALIBRATION ERROR AT 64"
PV23	N. SPAN CALIBRATION ERROR AT 11"
PV24	N. SPAN HARD OVERSPEED
PV25	N. SPAN RUN SAFETY TRIP
PV26	N. SPAN MAIN DRIVE BYPASS SELECTED
PV27	N. SUMP PUMP HIGH LEVEL
PV28	S. MOTOR BRAKE A HAND RELEASED
PV29	S. MACHINERY BRAKE A HAND RELEASED
PV30	S. MOTOR BRAKE B HAND RELEASED
PV31	S. MACHINERY BRAKE B HAND RELEASED
PV32	S. SUMP PUMP HIGH LEVEL
PV33	S. SPAN DRIVE A OUT OF SERVICE
PV34	S. SPAN DRIVE B OUT OF SERVICE
PV35	S. SPAN STALLED
PV36	S. SPAN CALCULATED OVERSPEED
PV37	S. SPAN CALIBRATION AT 64"
PV38	S. SPAN CALIBRATION AT 11"
PV39	S. SPAN HARD OVERSPEED
PV40	S. SPAN RUN SAFETY TRIP
PV41	S. SPAN MAIN DRIVE BYPASS SELECTED
PV42	SMOKE/HEAT DETECTED S. PIER
PV43	N.E. TRAFFIC GATE BYPASS SELECTED
PV44	N. HEAT TRACING SYSTEM FAULT
PV45	S. HEAT TRACING SYSTEM FAULT

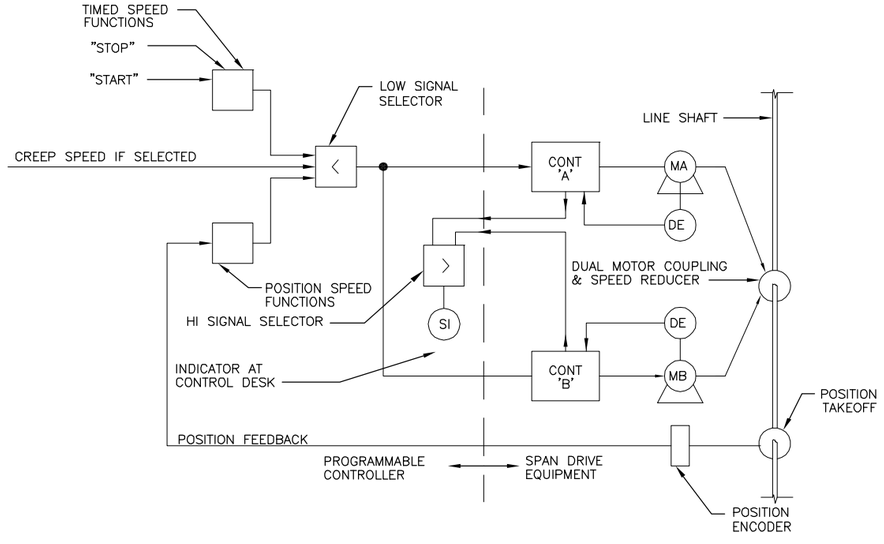

FIELD BOOK:						FED. AID No.		KING COUNTY DEPT. OF TRANSPORTATION HAROLD TANIGUCHI, DIRECTOR
SURVEYED:								SOUTH PARK BRIDGE #3179 REPLACEMENT
SURVEY BASE MAP:						PROJECT No. 300197		
DESIGN ENTERED: F. HAYWOOD	4/2009					SURVEY No. 32-24-4-22		MOTOR STARTER & SPEED CONTROL DIAGRAM
DESIGNED G. PETERS	4/2009							
CHECKED: R. STEEL	11/2009					MAINTENANCE DIVISION No. 3		
SUPERVISOR: G. PETERS	01/2010	NUM.	REVISION	BY	DATE			

JOHN G. SCHALLERT — STATE OF WASHINGTON — 45694 — REGISTERED PROFESSIONAL ENGINEER

HNTB

King County

BE46

SHEET 651 OF 667 SHEETS

316-63 (____)

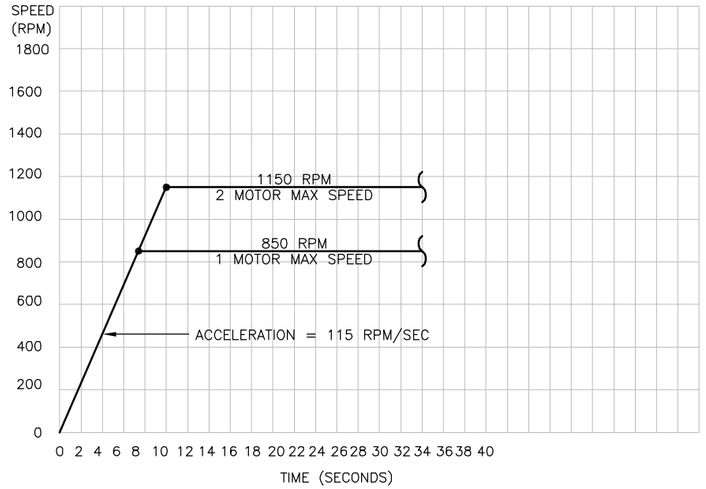

TIMED ACCELERATION

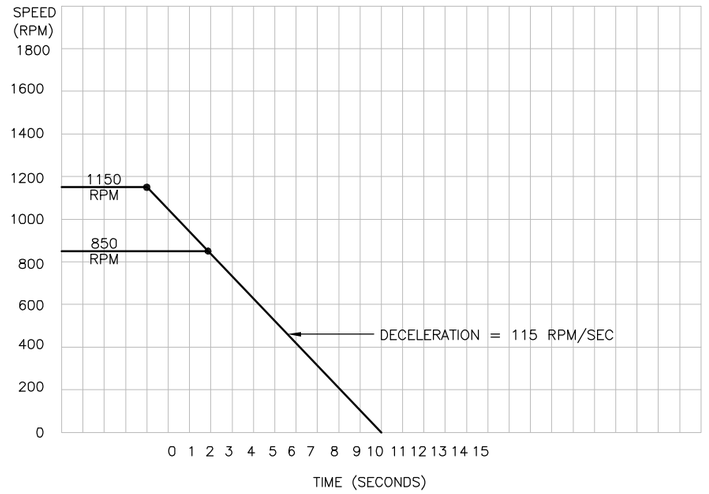

TIMED STOPPING SPEED
(STOP BEFORE END OF TRAVEL)

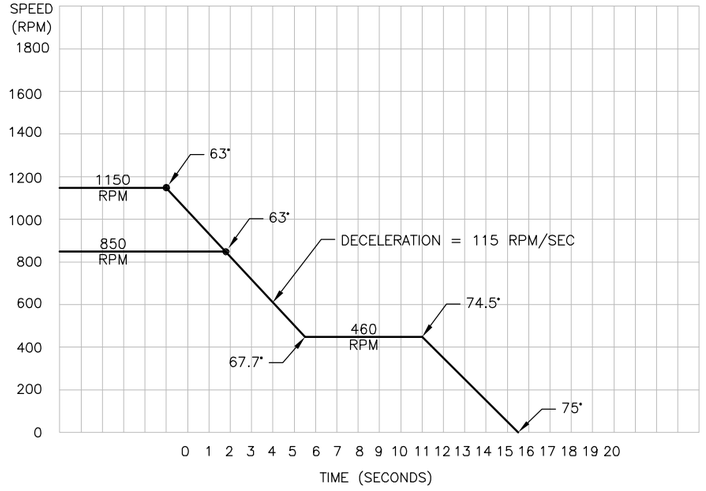

TIMED STOPPING SPEED-RAISE
(AT END OF TRAVEL)

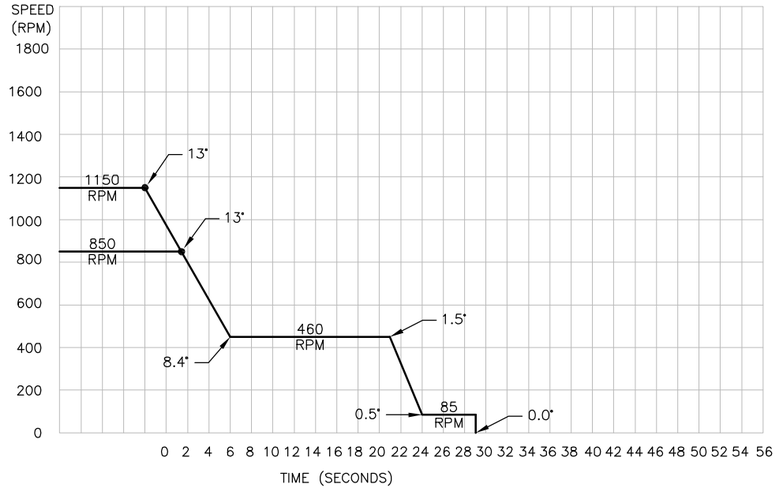

TIMED STOPPING SPEED-LOWER
(AT END OF TRAVEL)

FIELD BOOK:		
SURVEYED:		
SURVEY BASE MAP:		
DESIGN ENTERED:	F. HAYWOOD	4/2009
DESIGNED	G. PETERS	4/2009
CHECKED:	R. STEEL	11/2009
SUPERVISOR:	G. PETERS	01/2010

NUM.	REVISION	BY	DATE

JOHN G. SCHALLERT — STATE OF WASHINGTON — 45684 — REGISTERED PROFESSIONAL ENGINEER

HNTB

FED. AID No.

PROJECT No. 300197
SURVEY No. 32-24-4-22

MAINTENANCE DIVISION No. 3

KING COUNTY DEPT. OF TRANSPORTATION
HAROLD TANIGUCHI, DIRECTOR

SOUTH PARK BRIDGE #3179 REPLACEMENT

SPEED TIME CURVES

King County

BE47

SHEET 652 OF 667 SHEETS

316-63 (____)

CABLE NUMBER	COND COLOR	FROM	TO
POWER LINE METERING			
C1		MCC-1	CONT CONSOLE
	B	1	TB1-1
	R	2	TB1-2
C2		MCC-1	MAIN PLC CAB
	SEE		
	NOTE		
	7		
C3		MCC-1	MAIN PLC CAB
	B	8	TB101-1
	R	9	TB101-2
AIR HORN			
C4		MAIN PLC CAB	CONT CONSOLE
	B	TB111-10	TB1-10
	R	TB111-11	TB1-11
C5		AIR HORN	MAIN PLC CAB
	B	LOAD	TB111-11
	R	NEUTRAL	TB111-12
TRAFFIC SIGNALS			
C6		MAIN PLC CAB	CONT CONSOLE
	B	TB102-1	TB2-1
	R	TB102-2	TB2-2
	BL	TB102-3	TB2-3
	O	TB102-14	TB2-4
	Y	TB102-15	TB2-5
	BN	SPARE	SPARE
	RB	TB102-7	TB2-7
	BLB	TB102-8	TB2-8
	OB	TB102-9	TB2-9
	YB	TB102-10	TB2-10
	BNB	TB102-11	TB2-11
	BR	TB102-12	TB2-12
C7		NE TRAF GATE	MAIN PLC CAB
	B	LS-NE4 C	TB102-3
	R	LS-NE4 NO	TB102-4
C8		SW TRAF GATE	MAIN PLC CAB
	B	LS-SW4 NO	TB102-5
	R	LS-SW4 C	TB102-4
C9		NW TRAF GATE	MAIN PLC CAB
	B	LS-NW4 C	TB102-5
	R	LS-NW4 NO	TB102-6
C10		SE TRAF GATE	MAIN PLC CAB
	B	LS-SE4 NO	TB102-7
	R	LS-SE4 C	TB102-6
C11		NEAR TRAF SIG	MAIN PLC CAB
	B	GREEN	TB102-10
	R	NEUTRAL	TB102-13
	BL	YELLOW	TB102-11
	O	RED	TB102-12

CABLE NUMBER	COND COLOR	FROM	TO
C12		FAR TRAF SIG	MAIN PLC CAB
	B	GREEN	TB102-10
	R	NEUTRAL	TB102-13
	BL	YELLOW	TB102-11
	O	RED	TB102-12
LAMP TEST			
C13		MAIN PLC CAB	CONT CONSOLE
	B	TB101-6	TB1-6
	R	TB101-7	TB1-7
	BL	TB101-8	TB1-8
	O	SPARE	SPARE
C14		REMOTE PLC CAB	MAIN PLC CAB
	B	TB201-11	TB101-5
	R	TB201-12	TB101-8
WARNING BELLS			
C15		MAIN PLC CAB	CONT CONSOLE
	B	TB101-3	TB1-3
	R	TB101-4	TB1-4
C16		N. WARN BELL	MAIN PLC CAB
	B	LOAD	TB101-9
	R	NEUTRAL	TB101-10
C17		S. WARN BELL	MAIN PLC CAB
	B	LOAD	TB101-11
	R	NEUTRAL	TB101-12
LEAF LOCKOUT			
C18		MAIN PLC CAB	CONT CONSOLE
	B	TB124-9	TB18-9
	R	TB124-12	TB18-12
	BL	TB124-10	TB18-10
	O	TB124-11	TB18-11
NW TRAFFIC GATE			
C19		MAIN PLC CAB	CONT CONSOLE
	B	SPARE	SPARE
	R	TB103-2	TB3-2
	BL	TB103-3	TB3-3
	O	TB103-4	TB3-4
	Y	TB103-5	TB3-5
	BN	TB103-6	TB3-6
	RB	TB103-7	TB3-7
	BLB	TB103-8	TB3-8
	OB	TB103-9	TB3-9
	YB	TB103-10	TB3-10
	BNB	TB103-11	TB3-11
	BR	TB103-12	TB3-12
C20		MAIN PLC CAB	CONT CONSOLE
	B	TB103-13	TB3-13
	R	TB103-14	TB3-14
	BL	SPARE	SPARE
	O	SPARE	SPARE

CABLE NUMBER	COND COLOR	FROM	TO
C21		MCC-1	MAIN PLC CAB
	B	1	TB103-1
	R	X2	TB103-2
	BL	3	TB103-3
	O	4	TB103-4
	Y	12	TB103-14
	BN	SPARE	SPARE
	RB	SPARE	SPARE
C22		NW TRAF GATE	MAIN PLC CAB
	B	LS-NW1 COM	TB103-7
	R	LS-NW1 NC	TB103-6
	BL	LS-NW1 NO	TB103-8
	O	LS-NW2 NC	TB103-12
	Y	LS-NW2 NO	TB103-13
	BN	SPARE	SPARE
	RB	SPARE	SPARE
C23		NW TRAF GATE	PNLBD LP1
	B	13	LP1-1
	R	N1	NETURAL
P8		NW TRAF GATE	MCC-1
	B1	T1	T1
	B2	T2	T2
	B3	T3	T3
	B4	GND	GND
SE TRAFFIC GATE			
C24		REMOTE PLC CAB	CONT CONSOLE
	B	SPARE	SPARE
	R	TB202-2	TB4-2
	BL	TB202-3	TB4-3
	O	TB202-4	TB4-4
	Y	TB202-5	TB4-5
	BN	TB202-6	TB4-6
	RB	TB202-7	TB4-7
	BLB	TB202-8	TB4-8
	OB	TB202-9	TB4-9
	YB	TB202-10	TB4-10
	BNB	TB202-11	TB4-11
	BR	TB202-12	TB4-12
C25		REMOTE PLC CAB	CONT CONSOLE
	B	TB202-13	TB4-13
	R	TB202-14	TB4-14
	BL	SPARE	SPARE
	O	SPARE	SPARE
C26		MCC-2	REMOTE PLC CAB
	B	1	TB202-1
	R	X2	TB202-2
	BL	3	TB202-3
	O	4	TB202-4
	Y	12	TB202-14
	BN	SPARE	SPARE
	RB	SPARE	SPARE
C27		SE TRAF GATE	REMOTE PLC CAB
	B	LS-SE1 COM	TB202-7
	R	LS-SE1 NC	TB202-6
	BL	LS-SE1 NO	TB202-8
	O	LS-SE2 NC	TB202-12
	Y	LS-SE2 NO	TB202-13
	BN	SPARE	SPARE
	RB	SPARE	SPARE

CABLE NUMBER	COND COLOR	FROM	TO
C28		SE TRAF GATE	PNLBD LP2
	B	13	LP2-1
	R	N1	NETURAL
P34		SE TRAF GATE	MCC-2
	B1	T1	T1
	B2	T2	T2
	B3	T3	T3
	B4	GND	GND
NE TRAFFIC GATE			
C29		MCC-1	MAIN PLC CAB
	B	1	TB104-1
	R	X2	TB104-2
	BL	3	TB104-3
	O	4	TB104-4
	Y	12	TB104-14
	BN	SPARE	SPARE
	RB	SPARE	SPARE
C30		MAIN PLC CAB	CONT CONSOLE
	B	SPARE	SPARE
	R	TB104-2	TB5-2
	BL	TB104-3	TB5-3
	O	TB104-4	TB5-4
	Y	TB104-5	TB5-5
	BN	TB104-6	TB5-6
	RB	TB104-7	TB5-7
	BLB	TB104-8	TB5-8
	OB	TB104-9	TB5-9
	TB	TB104-10	TB5-10
	BNB	TB104-11	TB5-11
	BR	TB104-12	TB5-12
C31		MAIN PLC CAB	CONT CONSOLE
	B	TB104-13	TB5-13
	R	TB104-14	TB5-14
	BL	SPARE	SPARE
	O	SPARE	SPARE
C32		NE TRAF GATE	MAIN PLC CAB
	B	LS-NE1-C	TB104-7
	R	LS-NE1-NC	TB104-6
	BL	LS-NE1-NO	TB104-8
	O	LS-NE2-NC	TB104-12
	Y	LS-NE2-NO	TB104-13
	BN	SPARE	SPARE
	RB	SPARE	SPARE
C33		SE TRAF GATE	MAIN PLC CAB
	B	LS-SE3-C	TB104-6
	R	LS-SE3-NO	TB104-5
C34		NE TRAF GATE	PNL BD LP1
	B	13	LP1-3
	R	N1	NEUTRAL
P9		NE TRAF GATE	MCC-1
	B1	T1	T1
	B2	T2	T2
	B3	T3	T3
	B4	GND	GND

CABLE NUMBER	COND COLOR	FROM	TO
SW TRAFFIC GATE			
C35		MCC-2	REMOTE PLC CAB
	B	1	TB203-1
	R	X2	TB203-2
	BL	3	TB203-3
	O	4	TB203-4
	Y	12	TB203-14
	BN	SPARE	SPARE
	RB	SPARE	SPARE
C36		REMOTE PLC CAB	CONT CONSOLE
	B	SPARE	SPARE
	R	TB203-2	TB6-2
	BL	TB203-3	TB6-3
	O	TB203-4	TB6-4
	Y	TB203-5	TB6-5
	BN	TB203-6	TB6-6
	RB	TB203-7	TB6-7
	BLB	TB203-8	TB6-8
	OB	TB203-9	TB6-9
	TB	TB203-10	TB6-10
	BNB	TB203-11	TB6-11
	BR	TB203-12	TB6-12

1. PROVIDE INTERNAL JUMPER WIRES IN ACCORDANCE WITH SCHEMATIC DRAWINGS.

2. WIRING FOR INTERCOM SYSTEM IS NOT SCHEDULED. CONDUCTORS AND RACEWAYS SHALL BE PROVIDED AND INSTALLED IN ACCORDANCE WITH MANUFACTURER'S INSTRUCTIONS AND IN ACCORDANCE WITH THE PLANS AND SPECIFICATIONS.

3. LIGHTING AND RECEPTACLE CIRCUITS ARE NOT SCHEDULED. CONDUCTORS AND RACEWAYS SHALL BE PROVIDED AND INSTALLED IN ACCORDANCE WITH THE LIGHTING PLANS AND WITH THE SPECIFICATIONS.

4. PROVIDE BELDEN #9330 BETWEEN THE POSITION RESOLVER AND DECODER MODULE OR AS RECOMMENDED BY THE POSITION MONITOR EQUIPMENT MANUFACTURER.

5. PROVIDE BELDEN #YR29281 CABLE BETWEEN THE REMOTE PLC AND THE MAIN PLC FOR PLC REMOTE I/O COMMUNICATION OR AS RECOMMENDED BY THE PLC EQUIPMENT MANUFACTURER.

6. ALL MOTOR CONDUCTORS SHALL TERMINATE AT THE MOTOR CONTACTOR TERMINAL POINTS.

CONDUCTOR COLOR CODE

B	BLACK	RB	RED/BLACK
R	RED	BLB	BLUE/BLACK
BL	BLUE	OB	ORANGE/BLACK
O	ORANGE	YB	YELLOW/BLACK
Y	YELLOW	BNB	BROWN/BLACK
BN	BROWN	BR	BLACK/RED

7. ROUTE TSP DIRECT FROM POWER MONITOR TO I/O CARD. DO NOT TERMINATE.

FIELD BOOK:			
SURVEYED:			
SURVEY BASE MAP:			
DESIGN ENTERED:	F. HAYWOOD	10/2009	
DESIGNED	G. PETERS	10/2009	
CHECKED:	R. STEEL	11/2009	
SUPERVISOR:	G. PETERS	01/2010	

NUM.	REVISION	BY	DATE

JOHN G. SCHALEKAMP — STATE OF WASHINGTON — 45094 — REGISTERED PROFESSIONAL ENGINEER

HNTB

FED. AID No.

PROJECT No. 300197

SURVEY No. 32-24-4-22

MAINTENANCE DIVISION No. 3

KING COUNTY DEPT. OF TRANSPORTATION
HAROLD TANIGUCHI, DIRECTOR

SOUTH PARK BRIDGE #3179 REPLACEMENT

WIRING SCHEDULE-1

King County

BE48

SHEET 653 OF 667 SHEETS

316-63 (____)

CABLE NUMBER	COND COLOR	FROM	TO
C37		REMOTE PLC CAB	CONT CONSOLE
	B	TB203-13	TB4-13
	R	TB203-14	TB4-14
	BL	SPARE	SPARE
	O	SPARE	SPARE
C38		SW TRAF GATE	REMOTE PLC CAB
	B	LS-SW1-C	TB203-7
	R	LS-SW1-NC	TB203-6
	BL	LS-SW1-NO	TB203-8
	O	LS-SW2-NC	TB203-12
	Y	LS-SW2-NO	TB203-13
	BN	SPARE	SPARE
	RB	SPARE	SPARE
C39		SW TRAF GATE	PNL BD LP2
	B	13	LP2-3
	R	N1	NEUTRAL
C40		NW TRAF GATE	REMOTE PLC CAB
	B	LS-NW3-C	TB203-6
	R	LS-NW3-NO	TB203-5
P33		SE TRAF GATE	MCC-2
	B1	T1	T1
	B2	T2	T2
	B3	T3	T3
	B4	GND	GND

NW RESISTANCE GATE

C41		MCC-1	MAIN PLC CAB
	B	1	TB105-1
	R	X2	TB105-2
	BL	3	TB105-3
	O	4	TB105-4
	Y	12	TB105-12
	BN	SPARE	SPARE
	RB	SPARE	SPARE
C42		MAIN PLC CAB	CONT CONSOLE
	B	TB105-13	TB7-1
	R	TB105-2	TB7-2
	BL	TB105-3	TB7-3
	O	TB105-4	TB7-4
	Y	TB105-5	TB7-5
	BN	TB105-6	TB7-6
	RB	TB105-7	TB7-7
	BLB	TB105-8	TB7-8
	OB	TB105-9	TB7-9
	YB	TB105-10	TB7-10
	BNB	TB105-11	TB7-11
	BR	TB105-12	TB7-12
C43		NW RESIST GATE	MAIN PLC CAB
	B	LS-NWBHC-C	TB105-7
	R	LS-NWB1-NC	TB105-8
	BL	LS-NWB2-NO	TB105-5
	O	LS-NWB3-NC	TB105-11
	Y	LS-NWB5-NO	TB105-10
	BN	SPARE	SPARE
	RB	SPARE	SPARE
C44		NE RESIST GATE	MAIN PLC CAB
	B	LS-NEB6-C	TB105-8
	R	LS-NEB6-NO	TB105-9

CABLE NUMBER	COND COLOR	FROM	TO
C45		NW RESIST GATE	PNL BD LP1
	B	11	LP1-2
	R	N1	NEUTRAL
P10		NW RESIST GATE	MCC-1
	B1	T1	T1
	B2	T2	T2
	B3	T3	T3
	B4	GND	GND

NE RESISTANCE GATE

C46		MCC-1	MAIN PLC CAB
	B	1	TB106-1
	R	X2	TB106-2
	BL	3	TB106-3
	O	4	TB106-4
	Y	12	TB106-12
	BN	SPARE	SPARE
	RB	SPARE	SPARE
C47		MAIN PLC CAB	CONT CONSOLE
	B	TB106-13	TB8-1
	R	TB106-2	TB8-2
	BL	TB106-3	TB8-3
	O	TB106-4	TB8-4
	Y	TB106-5	TB8-5
	BN	TB106-6	TB8-6
	RB	TB106-7	TB8-7
	BLB	TB106-8	TB8-8
	OB	TB106-9	TB8-9
	YB	TB106-10	TB8-10
	BNB	TB106-11	TB8-11
	BR	TB106-12	TB8-12
C48		NE RESIST GATE	MAIN PLC CAB
	B	LS-NEBHC-C	TB106-7
	R	LS-NEB1-NC	TB106-8
	BL	LS-NEB2-NO	TB106-5
	O	LS-NEB3-NC	TB106-11
	Y	LS-NEB5-NO	TB106-10
	BN	LS-NEBLLS-NO	TB106-14
	RB	SPARE	SPARE
C49		NW RESIST GATE	MAIN PLC CAB
	B	LS-NWB6-C	TB106-5
	R	LS-NWB6-NO	TB106-6
C50		NE RESIST GATE	PNL BD LP1
	B	11	LP1-4
	R	N1	NEUTRAL
P11		NE RESIST GATE	MCC-1
	B1	T1	T1
	B2	T2	T2
	B3	T3	T3
	B4	GND	GND

CABLE NUMBER	COND COLOR	FROM	TO

SE RESISTANCE GATE

C51		MCC-2	REMOTE PLC CAB
	B	1	TB204-1
	R	X2	TB204-2
	BL	3	TB204-3
	O	4	TB204-4
	Y	12	TB204-12
	BN	SPARE	SPARE
	RB	SPARE	SPARE
C52		REMOTE PLC CAB	CONT CONSOLE
	B	SPARE	SPARE
	R	TB204-2	TB9-2
	BL	TB204-3	TB9-3
	O	TB204-4	TB9-4
	Y	TB204-5	TB9-5
	BN	TB204-6	TB9-6
	RB	TB204-7	TB9-7
	BLB	TB204-8	TB9-8
	OB	TB204-9	TB9-9
	YB	TB204-10	TB9-10
	BNB	TB204-11	TB9-11
	BR	TB204-12	TB9-12
C53		SE RESIST GATE	REMOTE PLC CAB
	B	LS-SEBHC-C	TB204-7
	R	LS-SEB1-NO	TB204-8
	BL	LS-SEB2-NC	TB204-5
	O	LS-SEB3-NC	TB204-11
	Y	LS-SEB5-NO	TB204-10
	BN	SPARE	SPARE
	RB	SPARE	SPARE
C54		SW RESIST GATE	REMOTE PLC CAB
	B	LS-SWB6-NO	TB204-8
	R	LS-SWB6-NC	TB204-9
C55		SE RESIST GATE	PNL BD LP2
	B	11	LP2-2
	R	N1	NEUTRAL
P36		SE RESIST GATE	MCC-2
	B1	T1	T1
	B2	T2	T2
	B3	T3	T3
	B4	GND	GND

SW RESISTANCE GATE

C56		MCC-2	REMOTE PLC CAB
	B	1	TB205-1
	R	X2	TB205-2
	BL	3	TB205-3
	O	4	TB205-4
	Y	12	TB205-12
	BN	SPARE	SPARE
	RB	SPARE	SPARE

CABLE NUMBER	COND COLOR	FROM	TO
C57		REMOTE PLC CAB	CONT CONSOLE
	B	SPARE	SPARE
	R	TB205-2	TB10-2
	BL	TB205-3	TB10-3
	O	TB205-4	TB10-4
	Y	TB205-5	TB10-5
	BN	TB205-6	TB10-6
	RB	TB205-7	TB10-7
	BLB	TB205-8	TB10-8
	OB	TB205-9	TB10-9
	YB	TB205-10	TB10-10
	BNB	TB205-11	TB10-11
	BR	TB205-12	TB10-12
C58		SW RESIST GATE	REMOTE PLC CAB
	B	LS-SWBHC-C	TB205-7
	R	LS-SWB1-NO	TB205-8
	BL	LS-SWB2-NC	TB205-5
	O	LS-SWB3-NC	TB205-11
	Y	LS-SWB5-NO	TB205-10
	BN	SPARE	SPARE
	RB	SPARE	SPARE
C59		SE RESIST GATE	REMOTE PLC CAB
	B	LS-SEB6-C	TB205-5
	R	LS-SEB6-NO	TB205-6
C60		SW RESIST GATE	PNL BD LP2
	B	11	LP2-4
	R	N1	NEUTRAL
P35		SE RESIST GATE	MCC-2
	B1	T1	T1
	B2	T2	T2
	B3	T3	T3
	B4	GND	GND

WEST SPAN LOCK

C61		MCC-1	MAIN PLC CAB
	B	1	TB107-1
	R	X2	TB107-2
	BL	3	TB107-3
	O	4	TB107-4
	Y	5	TB107-5
	BN	9	TB107-9
	RB	12	TB107-12
	BLB	SPARE	SPARE
	OB	SPARE	SPARE
C62		MAIN PLC CAB	CONT CONSOLE
	B	SPARE	SPARE
	R	TB107-2	TB11-2
	BL	TB107-3	TB11-3
	O	TB107-4	TB11-4
	Y	TB107-5	TB11-5
	BN	TB107-6	TB11-6
	RB	TB107-7	TB11-7
	BLB	TB107-8	TB11-8
	OB	TB107-9	TB11-9
	YB	TB107-10	TB11-10
	BN	TB107-11	TB11-11
	BR	TB107-12	TB11-12

CABLE NUMBER	COND COLOR	FROM	TO
C63		MAIN PLC CAB	CONT CONSOLE
	B	TB107-13	TB11-13
	R	TB107-14	TB11-14
	BL	TB107-15	TB11-15
	O	SPARE	SPARE
C64		W SPAN LOCK	MAIN PLC CAB
	B	LS-WLHC-C	TB107-7
	R	LS-WL1A-NC	TB107-6
	BL	LS-WL1B-NO	TB107-11
	O	LS-WL2A-NC	TB107-14
	Y	LS-WL2B-NO	TB107-13
	BN	SPARE	SPARE
	RB	SPARE	SPARE
P12		W SPAN LOCK	MCC-1
	B1	T1	T1
	B2	T2	T2
	B3	T3	T3
	B4	GND	GND

1. PROVIDE INTERNAL JUMPER WIRES IN ACCORDANCE WITH SCHEMATIC DRAWINGS.

2. WIRING FOR INTERCOM SYSTEM IS NOT SCHEDULED. CONDUCTORS AND RACEWAYS SHALL BE PROVIDED AND INSTALLED IN ACCORDANCE WITH MANUFACTURER'S INSTRUCTIONS AND IN ACCORDANCE WITH THE PLANS AND SPECIFICATIONS.

3. LIGHTING AND RECEPTACLE CIRCUITS ARE NOT SCHEDULED. CONDUCTORS AND RACEWAYS SHALL BE PROVIDED AND INSTALLED IN ACCORDANCE WITH THE LIGHTING PLANS AND WITH THE SPECIFICATIONS.

4. PROVIDE BELDEN #9330 BETWEEN THE POSITION RESOLVER AND DECODER MODULE OR AS RECOMMENDED BY THE POSITION MONITOR EQUIPMENT MANUFACTURER.

5. PROVIDE BELDEN #YR29281 CABLE BETWEEN THE REMOTE PLC AND THE MAIN PLC FOR PLC REMOTE I/O COMMUNICATION OR AS RECOMMENDED BY THE PLC EQUIPMENT MANUFACTURER.

6. ALL MOTOR CONDUCTORS SHALL TERMINATE AT THE MOTOR CONTACTOR TERMINAL POINTS.

CONDUCTOR COLOR CODE

B	BLACK	RB	RED/BLACK
R	RED	BLB	BLUE/BLACK
BL	BLUE	OB	ORANGE/BLACK
O	ORANGE	YB	YELLOW/BLACK
Y	YELLOW	BNB	BROWN/BLACK
BN	BROWN	BR	BLACK/RED

FIELD BOOK:			
SURVEYED:			
SURVEY BASE MAP:			
DESIGN ENTERED:	F. HAYWOOD	10/2009	
DESIGNED	G. PETERS	10/2009	
CHECKED:	R. STEEL	11/2009	
SUPERVISOR:	G. PETERS	01/2010	

NUM.	REVISION	BY	DATE

JOHN G. SCHALLERT — STATE OF WASHINGTON — 19994 — REGISTERED PROFESSIONAL ENGINEER

HNTB

FED. AID No. _____

PROJECT No. 300197

SURVEY No. 32-24-4-22

MAINTENANCE DIVISION No. 3

KING COUNTY DEPT. OF TRANSPORTATION
HAROLD TANIGUCHI, DIRECTOR

SOUTH PARK BRIDGE #3179 REPLACEMENT

WIRING SCHEDULE-2

King County

BE49

SHEET 654 OF 667 SHEETS

316-63 (____)

CABLE NUMBER	COND COLOR	FROM	TO
FULL AUTO CONTROL			
C65		MAIN PLC CAB	CONT CONSOLE
	B	TB109-1	TB12-1
	R	TB109-2	TB12-2
	BL	TB109-3	TB12-3
	O	TB109-4	TB12-4
	Y	SPARE	SPARE
	BN	TB109-6	TB12-6
	RB	SPARE	SPARE
	BLB	TB109-8	TB12-8
	OB	TB109-9	TB12-9
	YB	SPARE	SPARE
	BNB	SPARE	SPARE
	RB	SPARE	SPARE
C66		MAIN PLC CAB	CONT CONSOLE
	B	TB110-11	TB13-11
	R	TB110-10	TB13-10
C67		W SPAN LOCK	MAIN PLC CAB
	B	LS-WSL2D-C	TB110-1
	R	LS-WSL2D-NO	TB110-2
	BL	LS-WSL1D-C	TB110-4
	O	LS-WSL1D-NO	TB110-5
C68		E SPAN LOCK	MAIN PLC CAB
	B	LS-ESL2D-C	TB110-2
	R	LS-ESL2D-NO	TB110-3
	BL	LS-ESL1D-C	TB110-5
	O	LS-ESL1D-NO	TB110-6
EAST SPAN LOCK			
C69		MCC-1	MAIN PLC CAB
	B	1	TB108-1
	R	X2	TB108-2
	BL	3	TB108-3
	O	4	TB108-4
	Y	5	TB108-5
	BN	9	TB108-9
	RB	12	TB108-12
	BLB	SPARE	SPARE
	OB	SPARE	SPARE
C70		MAIN PLC CAB	CONT CONSOLE
	B	SPARE	SPARE
	R	TB108-2	TB14-2
	BL	TB108-3	TB14-3
	O	TB108-4	TB14-4
	Y	TB108-5	TB14-5
	BN	TB108-6	TB14-6
	RB	TB108-7	TB14-7
	BLB	TB108-8	TB14-8
	OB	TB108-9	TB14-9
	YB	TB108-10	TB14-10
	BN	TB108-11	TB14-11
	BR	TB108-12	TB14-12
C71		MAIN PLC CAB	CONT CONSOLE
	B	TB108-13	TB14-13
	R	TB108-14	TB14-14
	BL	TB108-15	TB14-15
	O	SPARE	SPARE

CABLE NUMBER	COND COLOR	FROM	TO
C72		E SPAN LOCK	MAIN PLC CAB
	B	LS-ESLHC-C	TB108-7
	R	LS-ESL1A-NC	TB108-6
	BL	LS-ESL1B-NO	TB108-11
	O	LS-ESL2A-NC	TB108-14
	Y	LS-ESL2B-NO	TB108-13
	BN	SPARE	SPARE
	RB	SPARE	SPARE
P13		E SPAN LOCK	MCC-1
	B1	T1	T1
	B2	T2	T2
	B3	T3	T3
	B4	GND	GND
NORTH MOTOR BRAKE A			
C73		MCC-1	MAIN PLC CAB
	B	1	TB111-1
	R	X2	TB111-2
	BL	3	TB111-3
	O	SPARE	SPARE
C74		MAIN PLC CAB	CONT CONSOLE
	B	SPARE	SPARE
	R	TB111-2	TB15-2
	BL	TB111-3	TB15-3
	O	TB111-4	TB15-4
	Y	TB111-5	TB15-5
	BN	TB111-6	TB15-6
	RB	SPARE	SPARE
C75		N MOTOR BRK A	MAIN PLC CAB
	B	LS-MTA1N-C	TB111-1
	R	LS-MTA1N-NC	TB111-4
	BL	LS-MTA2N-NO	TB111-5
	O	LS-MTA3N-NO	TB111-6
P14		N MOTOR BRK A	MCC-1
	B1	T1	T1
	B2	T2	T2
	B3	T3	T3
	B4	GND	GND
NORTH MACH BRAKE A			
C76		MCC-1	MAIN PLC CAB
	B	1	TB112-1
	R	X2	TB112-2
	BL	3	TB112-3
	O	SPARE	SPARE
C77		MAIN PLC CAB	CONT CONSOLE
	B	SPARE	SPARE
	R	TB112-2	TB16-2
	BL	TB112-3	TB16-3
	O	TB112-4	TB16-4
	T	TB112-5	TB16-5
	BN	TB112-6	TB16-6
	RB	SPARE	SPARE
C78		N MACH BRK A	MAIN PLC CAB
	B	LS-MCA1N-C	TB112-1
	R	LS-MCA1N-NC	TB112-4
	BL	LS-MCA2N-NO	TB112-5
	O	LS-MCA3N-NO	TB112-6

CABLE NUMBER	COND COLOR	FROM	TO
P16		N MACH BRK A	MCC-1
	B1	T1	T1
	B2	T2	T2
	B3	T3	T3
	B4	GND	GND
NORTH MOTOR BRAKE B			
C79		MCC-1	MAIN PLC CAB
	B	1	TB113-1
	R	X2	TB113-2
	BL	3	TB113-3
	O	SPARE	SPARE
C80		MAIN PLC CAB	CONT CONSOLE
	B	SPARE	SPARE
	R	TB113-2	TB17-2
	BL	TB113-3	TB17-3
	O	TB113-4	TB17-4
	Y	TB113-5	TB17-5
	BN	TB115-6	TB17-6
	RB	SPARE	SPARE
C81		N MOTOR BRK B	MAIN PLC CAB
	B	LS-MTB1N-C	TB113-1
	R	LS-MTB1N-NC	TB113-4
	BL	LS-MTB2N-NO	TB113-5
	O	LS-MTB3N-NO	TB113-6
P15		N MOTOR BRK B	MCC-1
	B1	T1	T1
	B2	T2	T2
	B3	T3	T3
	B4	GND	GND
NORTH MACH BRAKE B			
C82		MCC-1	MAIN PLC CAB
	B	1	TB114-1
	R	X2	TB114-2
	BL	3	TB114-3
	O	SPARE	SPARE
C83		MAIN PLC CAB	CONT CONSOLE
	B	SPARE	SPARE
	R	TB114-2	TB18-2
	BL	TB114-3	TB18-3
	O	TB114-4	TB18-4
	Y	TB114-5	TB18-5
	BN	TB114-6	TB18-6
	RB	SPARE	SPARE
C84		N MACH BRK B	MAIN PLC CAB
	B	LS-MCB1N-C	TB114-1
	R	LS-MCB1N-NC	TB114-4
	BL	LS-MCB2N-NO	TB114-5
	O	LS-MCB3N-NO	TB114-6
P17		N MACH BRK B	MCC-1
	B1	T1	T1
	B2	T2	T2
	B3	T3	T3
	B4	GND	GND

CABLE NUMBER	COND COLOR	FROM	TO
NORTH SPAN POSITION			
C85		LS-N10A	MAIN PLC CAB
	B	LS-N10A-C	TB117-1
	R	LS-N10A-NO	TB117-3
C86		LS-N10B	MAIN PLC CAB
	B	LS-N10B-C	TB117-3
	R	LS-N10B-NO	TB117-4
C87		LS-HL1N	MAIN PLC CAB
	B	LS-HL1N-C	TB117-10
	R	LS-HL1N-NO	TB117-11
C88		LS-HL2N	MAIN PLC CAB
	B	LS-HL2N-C	TB117-10
	R	LS-HL2N-NO	TB117-12
C89		N ROTARY LS	MAIN PLC CAB
	B	LS-EL2N-C	TB117-13
	RB	LS-EL1N-NO	TB117-9
	BL	LS-EL2N-NO	TB117-14
	O	LS-EL3N-NO	TB117-15
	Y	LS-EL4N-NO	TB117-5
	BN	SPARE	SPARE
	RB	LS-EL6N-NO	TB117-19
	BLB	LS-EL7N-NO	TB117-6
	OB	LS-EL8N-NO	TB117-18
	YB	SPARE	SPARE
	BNB	SPARE	SPARE
	BR	SPARE	SPARE
C90		MAIN PLC CAB	CONT CONSOLE
	B	SPARE	SPARE
	R	TB117-2	TB20-2
	BL	TB117-4	TB20-4
	O	TB117-5	TB20-5
	Y	TB117-6	TB20-6
	BN	TB117-7	TB20-7
	RB	TB117-8	TB20-8
	BLB	SPARE	SPARE
	OB	SPARE	SPARE
C91		LS-1N	MAIN PLC CAB
	B	LS-1N COM	TB117-16
	R	LS-1N NO	TB117-17
NORTH SPAN CONTROL			
C92		MAIN PLC CAB	CONT CONSOLE
	B	TB119-1	TB21-1
	R	TB119-2	TB21-2
	BL	TB119-3	TB21-3
	O	TB119-4	TB21-4
	Y	TB119-5	TB21-5
	BN	TB119-6	TB21-6
	RB	TB119-7	TB21-7
	BLB	TB119-8	TB21-8
	OB	TB119-10	TB21-10
	YB	TB119-11	TB21-11
	BNB	SPARE	SPARE
	BR	SPARE	SPARE

CABLE NUMBER	COND COLOR	FROM	TO
SPAN CONTROL SELECTOR			
C93		MAIN PLC CAB	CONT CONSOLE
	B	TB120-1	TB22-1
	R	TB120-2	TB22-2
	BL	TB120-3	TB22-3
	O	TB120-4	TB22-4
	Y	SPARE	SPARE
	BN	SPARE	SPARE
	RB	SPARE	SPARE
N MAIN DRIVE 1			
C94		N DRIVE CONT 1	CONT CONSOLE
	B	9	TB23-1
	R	2	TB23-2
	BL	3	TB23-3
	O	4	TB23-4
	Y	SPARE	SPARE
	BN	SPARE	SPARE
	RB	SPARE	SPARE

1. PROVIDE INTERNAL JUMPER WIRES IN ACCORDANCE WITH SCHEMATIC DRAWINGS.

2. WIRING FOR INTERCOM SYSTEM IS NOT SCHEDULED. CONDUCTORS AND RACEWAYS SHALL BE PROVIDED AND INSTALLED IN ACCORDANCE WITH MANUFACTURER'S INSTRUCTIONS AND IN ACCORDANCE WITH THE PLANS AND SPECIFICATIONS.

3. LIGHTING AND RECEPTACLE CIRCUITS ARE NOT SCHEDULED. CONDUCTORS AND RACEWAYS SHALL BE PROVIDED AND INSTALLED IN ACCORDANCE WITH THE LIGHTING PLANS AND WITH THE SPECIFICATIONS.

4. PROVIDE BELDEN #9330 BETWEEN THE POSITION RESOLVER AND DECODER MODULE OR AS RECOMMENDED BY THE POSITION MONITOR EQUIPMENT MANUFACTURER.

5. PROVIDE BELDEN #YR29281 CABLE BETWEEN THE REMOTE PLC AND THE MAIN PLC FOR PLC REMOTE I/O COMMUNICATION OR AS RECOMMENDED BY THE PLC EQUIPMENT MANUFACTURER.

6. ALL MOTOR CONDUCTORS SHALL TERMINATE AT THE MOTOR CONTACTOR TERMINAL POINTS.

CONDUCTOR COLOR CODE

B	BLACK	RB	RED/BLACK
R	RED	BLB	BLUE/BLACK
BL	BLUE	OB	ORANGE/BLACK
O	ORANGE	YB	YELLOW/BLACK
Y	YELLOW	BNB	BROWN/BLACK
BN	BROWN	BR	BLACK/RED

FIELD BOOK:		
SURVEYED:		
SURVEY BASE MAP:		
DESIGN ENTERED:	F. HAYWOOD	10/2009
DESIGNED	G. PETERS	10/2009
CHECKED:	R. STEEL	11/2009
SUPERVISOR:	G. PETERS	01/2010

NUM.	REVISION	BY	DATE

JOHN G. SCHALEKAMP — STATE OF WASHINGTON — 45094 — REGISTERED PROFESSIONAL ENGINEER

HNTB

FED. AID No.

PROJECT No. 300197

SURVEY No. 32-24-4-22

MAINTENANCE DIVISION No. 3

KING COUNTY DEPT. OF TRANSPORTATION
HAROLD TANIGUCHI, DIRECTOR

SOUTH PARK BRIDGE #3179 REPLACEMENT

WIRING SCHEDULE-3

King County

BE50

SHEET 655 OF 667 SHEETS

316-63 (____)

CABLE NUMBER	COND COLOR	FROM	TO
C95		N DRIVE CONT 1	MAIN PLC CAB
	B	SPARE	SPARE
	R	2	TB121-2
	BL	3	TB121-3
	O	4	TB121-4
	Y	5	TB121-5
	BN	6	TB121-6
	RB	7	TB121-7
	BLB	8	TB121-8
	OB	11	TB121-11
	YB	16	TB121-16
	BNB	SPARE	SPARE
	BR	SPARE	SPARE
C96		NSS-1	N DRIVE CONT 1
	B	NSS-1-C	10
	R	NSS-1-NC	1
C97		N DRV MOTOR 1	N DRIVE CONT 1
	B	NTPS-1-C	10
	R	NTPS-1-NC	9
C98		MAIN PLC CAB	CONT CONSOLE
	B	TB121-9	TB23-5
	R	TB121-10	TB23-6
C99		PNL BD LP1	N DRIVE CONT 1
	B	LP1-5	12
	R	NEUTRAL	14
C100		N DRV MTR 1 HTR	N DRIVE CONT 1
	B	H1	13
	R	H2	14
C101		N TACH GEN 1	N DRIVE CONT 1
	B	POSITIVE	17
	W	NEGATIVE	18
	SHLD	GROUND	19
C102		N DRIVE CONT 1	CONT CONSOLE
	B	21	TB23-10
	W	22	TB23-11
	SHLD	24	TB23-12
C103		N DRIVE CONT 1	MAIN PLC CAB
	B	22	TB121-13
	W	23	TB121-14
	SHLD	24	TB121-15
C104		N DRIVE CONT 1	CONT CONSOLE
	B	28	TB25-13
	W	29	TB25-14
	SHLD	30	TB25-15
P20		N DRV MTR 1 (ARM)	N DRIVE CONT 1
	B1	A1	A1
	B2	A2	A2
	B3	GND	GND
P21		N DRV MTR 1 (FLD)	N DRIVE CONT 1
	B1	F1	F1
	B2	F2	F2

CABLE NUMBER	COND COLOR	FROM	TO
N MAIN DRIVE 2			
C105		N DRIVE CONT 2	CONT CONSOLE
	B	9	TB24-1
	R	2	TB24-2
	BL	3	TB24-3
	O	4	TB24-4
	Y	SPARE	SPARE
	BN	SPARE	SPARE
	RB	SPARE	SPARE
C106		N DRIVE CONT 2	MAIN PLC CAB
	B	SPARE	SPARE
	R	2	TB122-2
	BL	3	TB122-3
	O	4	TB122-4
	Y	5	TB122-5
	BN	6	TB122-6
	RB	7	TB122-7
	BLB	8	TB122-8
	OB	11	TB122-11
	YB	16	TB122-16
	BNB	SPARE	SPARE
	BR	SPARE	SPARE
C107		NSS-2	N DRIVE CONT 2
	B	NSS-2-C	10
	R	NSS-2-NC	1
C108		N DRV MOTOR 2	N DRIVE CONT 2
	B	NTPS-2-C	10
	R	NTPS-2-NC	9
C109		PNL BD LP1	N DRIVE CONT 2
	B	LP1-5	12
	R	NEUTRAL	14
C110		N DRV MTR 2 HTR	N DRIVE CONT 2
	B	H1	13
	R	H2	14
C111		N TACH GEN 2	N DRIVE CONT 2
	B	POSITIVE	17
	W	NEGATIVE	18
	SHLD	GROUND	19
C112		N DRIVE CONT 2	CONT CONSOLE
	B	21	TB24-10
	W	22	TB24-11
	SHLD	24	TB24-12
C113		N DRIVE CONT 2	MAIN PLC CAB
	B	22	TB122-13
	W	23	TB122-14
	SHLD	24	TB122-15
C114		N DRIVE CONT 2	CONT CONSOLE
	B	28	TB24-13
	W	29	TB24-14
	SHLD	30	TB24-15
P24		N DRV MTR B (ARM)	N DRIVE CONT 2
	B1	A1	A1
	B2	A2	A2
	B3	GND	GND

CABLE NUMBER	COND COLOR	FROM	TO
P25		N DRV MTR B (FLD)	N DRIVE CONT 2
	B1	F1	F1
	B2	F2	F2
N SPAN POSITION MONITOR			
C115		N POS RESOLVER	MAIN PLC CAB
	SEE	S1	S1
	NOTE 3	S2	S2
		S3	S3
		S4	S4
		RH	RH
		RL	RL
		SPARE	SPARE
		SPARE	SPARE
C116		MAIN PLC CAB	CONTROL DESK
	B	7 (ANALOG POS)	LOOP POS
	W	8 (ANALOG NEG)	LOOP NEG
	SHLD	GND	GND
N DRV SPEED CONT OUTPUT			
C117		N DRV CONT 1 SPD	MAIN PLC CAB
	B	32	TB124-1
	W	33	TB124-2
	SHLD	34	TB124-3
C118		N DRV CONT 2 SPD	MAIN PLC CAB
	B	32	TB124-4
	W	33	TB124-5
	SHLD	34	TB124-6
N AUXILIARY DRIVE			
C119		MCC-1	MAIN PLC CAB
	B	1	TB125-18
	R	X2	TB125-2
	BL	3	TB125-3
	O	4	TB125-4
	Y	5	TB125-5
	BN	7	TB125-17
	RB	8	TB125-10
	BLB	9	TB125-9
	OB	13	TB125-13
	YB	14	TB125-14
	BNB	SPARE	SPARE
	BR	SPARE	SPARE
C120		MAIN PLC CAB	CONT CONSOLE
	B	TB125-1	TB25-1
	R	TB125-2	TB25-2
	BL	TB125-3	TB25-3
	O	TB125-4	TB25-4
	Y	TB125-5	TB25-5
	BN	TB125-6	TB25-6
	RB	TB125-7	TB25-7
	BLB	TB125-8	TB25-8
	OB	TB125-9	TB25-9
	YB	TB125-10	TB25-10
	BNB	SPARE	SPARE
	BR	SPARE	SPARE
C121		N DRIVE CONT 1	MAIN PLC CAB
	B	26	TB125-6
	R	25	TB125-15

CABLE NUMBER	COND COLOR	FROM	TO
C122		N DRIVE CONT 2	MAIN PLC CAB
	B	26	TB125-15
	R	25	TB125-16
C123		N AUX DRV CLUTCH	MAIN PLC CAB
	B	LINE	TB125-11
	R	NEUTRAL	TB125-12
C124		MCC-1	PNL BD LP1
	B	17	LP1-6
	R	21	NEUTRAL
C125		N AUX DRV MTR HTR	MCC-1
	B	LOAD	20
	R	COMMON	21
P26		N AUX DRIVE MTR	MCC-1
	B1	T1	T1
	B2	T2	T2
	B3	T3	T3
	B4	GND	GND
	B11	T11	T11
	B12	T12	T12
	B13	T13	T13
SPAN MOTOR SELECTOR			
C126		MAIN PLC CAB	CONT CONSOLE
	B	TB115-1	TB26-1
	R	TB115-2	TB26-2
	BL	TB115-3	TB26-3
	O	TB115-4	TB26-4
C127		N SUMP PUMP PNL	MAIN PLC CAB
	B	HI-LEVEL NO	TB115-5
	R	HI-LEVEL COM	TB115-6
SPAN SELECT			
C128		MAIN PLC CAB	CONT CONSOLE
	B	TB115-7	TB26-7
	R	TB115-8	TB26-8
	BL	TB115-9	TB26-9
	O	TB115-10	TB26-10
SOUTH MOTOR BRAKE A			
C129		MCC-2	REMOTE PLC CAB
	B	1	TB208-1
	R	X2	TB208-2
	BL	3	TB208-3
	O	SPARE	SPARE
C130		REMOTE PLC CAB	CONT CONSOLE
	B	SPARE	SPARE
	R	TB208-2	TB27-2
	BL	TB208-3	TB27-3
	O	TB208-4	TB27-4
	Y	TB208-5	TB27-5
	BN	TB208-6	TB27-6
	RB	SPARE	SPARE

CABLE NUMBER	COND COLOR	FROM	TO
C131		S MOTOR BRK A	REMOTE PLC CAB
	B	LS-MTA1S-C	TB208-1
	R	LS-MTA1S-NC	TB208-4
	BL	LS-MTA2S-NO	TB208-5
	O	LS-MTA3S-NO	TB208-6
P35		S MOTOR BRK A	MCC-2
	B1	T1	T1
	B2	T2	T2
	B3	T3	T3
	B4	GND	GND
SOUTH MACH BRAKE A			
C132		MCC-2	REMOTE PLC CAB
	B	1	TB209-1
	R	X2	TB209-2
	BL	3	TB209-3
	O	SPARE	SPARE
C133		REMOTE PLC CAB	CONT CONSOLE
	B	SPARE	SPARE
	R	TB209-2	TB28-2
	BL	TB209-3	TB28-3
	O	TB209-4	TB28-4
	Y	TB209-5	TB28-5
	BN	TB209-6	TB28-6
	RB	SPARE	SPARE

1. PROVIDE INTERNAL JUMPER WIRES IN ACCORDANCE WITH SCHEMATIC DRAWINGS.

2. WIRING FOR INTERCOM SYSTEM IS NOT SCHEDULED. CONDUCTORS AND RACEWAYS SHALL BE PROVIDED AND INSTALLED IN ACCORDANCE WITH MANUFACTURER'S INSTRUCTIONS AND IN ACCORDANCE WITH THE PLANS AND SPECIFICATIONS.

3. LIGHTING AND RECEPTACLE CIRCUITS ARE NOT SCHEDULED. CONDUCTORS AND RACEWAYS SHALL BE PROVIDED AND INSTALLED IN ACCORDANCE WITH THE LIGHTING PLANS AND WITH THE SPECIFICATIONS.

4. PROVIDE BELDEN #9330 BETWEEN THE POSITION RESOLVER AND DECODER MODULE OR AS RECOMMENDED BY THE POSITION MONITOR EQUIPMENT MANUFACTURER.

5. PROVIDE BELDEN #YR29281 CABLE BETWEEN THE REMOTE PLC AND THE MAIN PLC FOR PLC REMOTE I/O COMMUNICATION OR AS RECOMMENDED BY THE PLC EQUIPMENT MANUFACTURER.

6. ALL MOTOR CONDUCTORS SHALL TERMINATE AT THE MOTOR CONTACTOR TERMINAL POINTS.

CONDUCTOR COLOR CODE

B	BLACK	RB	RED/BLACK
R	RED	BLB	BLUE/BLACK
BL	BLUE	OB	ORANGE/BLACK
O	ORANGE	YB	YELLOW/BLACK
Y	YELLOW	BNB	BROWN/BLACK
BN	BROWN	BR	BLACK/RED

FIELD BOOK:			
SURVEYED:			
SURVEY BASE MAP:			
DESIGN ENTERED:	F. HAYWOOD	10/2009	
DESIGNED	G. PETERS	10/2009	
CHECKED:	R. STEEL	11/2009	
SUPERVISOR:	G. PETERS	01/2010	

NUM.	REVISION	BY	DATE

JOHN G. SCHALLERT — STATE OF WASHINGTON — 45094 — REGISTERED PROFESSIONAL ENGINEER

HNTB

FED. AID No.

PROJECT No. 300197

SURVEY No. 32-24-4-22

MAINTENANCE DIVISION No. 3

KING COUNTY DEPT. OF TRANSPORTATION
HAROLD TANIGUCHI, DIRECTOR

SOUTH PARK BRIDGE #3179 REPLACEMENT

WIRING SCHEDULE-4

King County

BE51

SHEET 656 OF 667 SHEETS

316-63 (____)

CABLE NUMBER	COND COLOR	FROM	TO
C134		S MACH BRK A	REMOTE PLC CAB
	B	LS-MCA1S-C	TB209-1
	R	LS-MCA1S-NC	TB209-4
	BL	LS-MCA2S-NO	TB209-5
	O	LS-MCA3S-NO	TB209-6
P37		S MACH BRK A	MCC-2
	B1	T1	T1
	B2	T2	T2
	B3	T3	T3
	B4	GND	GND
SOUTH MOTOR BRAKE B			
C135		MCC-2	REMOTE PLC CAB
	B	1	TB210-1
	R	X2	TB210-2
	BL	3	TB210-3
	O	SPARE	SPARE
C136		REMOTE PLC CAB	CONT CONSOLE
	B	SPARE	SPARE
	R	TB210-2	TB29-2
	BL	TB210-3	TB29-3
	O	TB210-4	TB29-4
	T	TB210-5	TB29-5
	BN	TB210-6	TB29-6
	RB	SPARE	SPARE
C137		S MTR BRK A	REMOTE PLC CAB
	B	LS-MTB1S-C	TB210-1
	R	LS-MTB1S-NC	TB210-4
	BL	LS-MTB2S-NO	TB210-5
	O	LS-MTB3S-NO	TB210-6
P36		S MOTOR BRK B	MCC-2
	B1	T1	T1
	B2	T2	T2
	B3	T3	T3
	B4	GND	GND
SOUTH MACH BRAKE B			
C138		MCC-2	REMOTE PLC CAB
	B	1	TB211-1
	R	X2	TB211-2
	BL	3	TB211-3
	O	SPARE	SPARE
C139		REMOTE PLC CAB	CONT CONSOLE
	B	SPARE	SPARE
	R	TB211-2	TB30-2
	BL	TB211-3	TB30-3
	O	TB211-4	TB30-4
	Y	TB211-5	TB30-5
	BN	TB211-6	TB30-6
	RB	SPARE	SPARE
C140		S MACH BRK B	REMOTE PLC CAB
	B	LS-MCB1S-C	TB211-1
	R	LS-MCB1S-NC	TB211-4
	BL	LS-MCB2S-NO	TB211-5
	O	LS-MCB3S-NO	TB211-6

CABLE NUMBER	COND COLOR	FROM	TO
P38		S MACH BRK B	MCC-2
	B1	T1	T1
	B2	T2	T2
	B3	T3	T3
	B4	GND	GND
SOUTH SPAN POSITION			
C141		LS-S10A	REMOTE PLC CAB
	B	LS-S10A-C	TB213-1
	R	LS-S10A-NO	TB213-3
C142		LS-S10B	REMOTE PLC CAB
	B	LS-S10B-C	TB213-3
	R	LS-S10B-NO	TB213-4
C143		LS-HL1S	REMOTE PLC CAB
	B	LS-HL1S-C	TB213-10
	R	LS-HL1S-NO	TB213-11
C144		LS-HL2S	REMOTE PLC CAB
	B	LS-HL2S-C	TB213-10
	R	LS-HL2S-NO	TB213-12
C145		S ROTARY LS	REMOTE PLC CAB
	B	LS-EL2S-C	TB213-13
	RB	LS-EL1S-NO	TB213-9
	BL	LS-EL2S-NO	TB213-14
	O	LS-EL3S-NO	TB213-15
	Y	LS-EL4S-NO	TB213-5
	BN	SPARE	SPARE
	RB	LS-EL6S-NO	TB213-19
	BLB	LS-EL7S-NO	TB1213-6
	OB	LS-EL8S-NO	TB213-18
	YB	SPARE	SPARE
	BNB	SPARE	SPARE
	BR	SPARE	SPARE
C146		REMOTE PLC CAB	CONT CONSOLE
	B	SPARE	SPARE
	R	TB213-2	TB31-2
	BL	TB213-4	TB31-4
	O	TB213-5	TB31-5
	Y	TB213-6	TB31-6
	BN	TB213-7	TB31-7
	RB	TB213-8	TB31-8
	BLB	SPARE	SPARE
	OB	SPARE	SPARE
C147		LS-1S	REMOTE PLC CAB
	B	LS-1S NO	TB213-16
	R	LS-1S COM	TB213-17
C148		S SUMP PUMP PNL	REMOTE PLC CAB
	B	HIGH LEVEL NO	TB213-16
	R	HIGH LEVEL COM	TB213-20
NAVIGATION LIGHTS			
C149		MAIN PLC CAB	CONT CONSOLE
	B	TB118-10	TB19-10
	R	TB118-11	TB19-11
	BL	TB118-12	TB19-12
	O	SPARE	SPARE

CABLE NUMBER	COND COLOR	FROM	TO
C150		PHOTOCELL	MAIN PLC CAB
	B	LINE	TB118-11
	R	COMMON	TB118-9
	BL	LOAD	TB118-12
	O	SPARE	SPARE
C151		NW SPAN CHNL LT	MAIN PLC CAB
	B	RED	TB118-2
	R	COMMON	TB118-4
	BL	GREEN	TB118-3
	O	SPARE	SPARE
C152		NW SPAN CHNL LT	NE SPAN CHNL LT
	B	RED	RED
	R	COMMON	COMMON
	BL	GREEN	GREEN
	O	SPARE	SPARE
C153		NW FENDER NAV LT	MAIN PLC CAB
	B	LINE	TB118-5
	R	COMMON	TB118-6
C154		NW FENDER NAV LT	N MID FENDER LT
	B	LINE	LINE
	R	COMMON	COMMON
C155		N MID FENDER LT	NE FENDER NAV LT
	B	LINE	LINE
	R	COMMON	COMMON
C156		NE FENDER NAV LT	N CLEAR GUAGE LT
	B	LINE	LINE
	R	COMMON	COMMON
C157		REMOTE PLC CAB	MAIN PLC CAB
	B	TB212-5	TB114-11
	R	TB212-9	TB114-12
C158		SE SPAN CHNL LT	REMOTE PLC CAB
	B	RED	TB212-6
	R	COMMON	TB212-8
	BL	GREEN	TB212-7
	O	SPARE	SPARE
C159		SE SPAN CHNL LT	SW SPAN CHNL LT
	B	RED	RED
	R	COMMON	COMMON
	BL	GREEN	GREEN
	O	SPARE	SPARE
C160		S MID FENDER LT	REMOTE PLC CAB
	B	LINE	TB212-9
	R	COMMON	TB212-10
C161		SW FENDER NAV LT	S MID FENDER LT
	B	LINE	LINE
	R	COMMON	COMMON
C162		S MID FENDER LT	SE FENDER NAV LT
	B	LINE	LINE
	R	COMMON	COMMON

CABLE NUMBER	COND COLOR	FROM	TO
C163		SW FENDER NAV LT	S CLEAR GUAGE LT
	B	LINE	LINE
	R	COMMON	COMMON
S SPAN MANUAL CONTROL			
		MAIN PLC CAB	CONT CONSOLE
	B	TB113-10	TB17-10
	R	TB113-11	TB17-11
	BL	TB113-12	TB17-12
	O	SPARE	SPARE
S MAIN DRIVE 1			
C165		S DRIVE CONT 1	CONT CONSOLE
	B	9	TB32-1
	R	2	TB32-2
	BL	3	TB32-3
	O	4	TB32-4
	Y	SPARE	SPARE
	BN	SPARE	SPARE
	RB	SPARE	SPARE
C166		S DRIVE CONT 1	REMOTE PLC CAB
	B	SPARE	SPARE
	R	2	TB206-2
	BL	3	TB206-3
	O	4	TB206-4
	Y	5	TB206-5
	BN	6	TB206-6
	RB	7	TB206-7
	BLB	8	TB206-8
	OB	11	TB206-11
	YB	16	TB206-16
	BNB	SPARE	SPARE
	BR	SPARE	SPARE
C167		SSS-1	S DRIVE CONT 1
	B	SSS-1-C	10
	R	SSS-1-NC	1
C168		S DRV MOTOR 1	S DRIVE CONT 1
	B	STPS-1-C	10
	R	STPS-1-NC	9
C169		PNL BD LP2	S DRIVE CONT 1
	B	LP2-5	12
	R	NEUTRAL	14
C170		S DRV MTR 1 HTR	S DRIVE CONT 1
	B	H1	13
	R	H2	14
C171		S TACH GEN 1	S DRIVE CONT 1
	B	POSITIVE	17
	W	NEGATIVE	18
	SHD	GROUND	19
C172		S DRIVE CONT 1	CONT CONSOLE
	B	21	TB32-10
	W	22	TB32-11
	SHD	24	TB32-12

CABLE NUMBER	COND COLOR	FROM	TO
C173		S DRIVE CONT 1	REMOTE PLC CAB
	B	22	TB206-13
	W	23	TB206-14
	SHD	24	TB206-15
C174		S DRIVE CONT 1	CONT CONSOLE
	B	28	TB32-13
	W	29	TB32-14
	SHD	30	TB32-15
P41		S DRV MTR 1 (ARM)	S DRIVE CONT 1
	B1	A1	A1
	B2	A2	A2
	B3	GND	GND
P42		S DRV MTR 1 (FLD)	S DRIVE CONT 1
	B1	F1	F1
	B2	F2	F2

1. PROVIDE INTERNAL JUMPER WIRES IN ACCORDANCE WITH SCHEMATIC DRAWINGS.

2. WIRING FOR INTERCOM SYSTEM IS NOT SCHEDULED. CONDUCTORS AND RACEWAYS SHALL BE PROVIDED AND INSTALLED IN ACCORDANCE WITH MANUFACTURER'S INSTRUCTIONS AND IN ACCORDANCE WITH THE PLANS AND SPECIFICATIONS.

3. LIGHTING AND RECEPTACLE CIRCUITS ARE NOT SCHEDULED. CONDUCTORS AND RACEWAYS SHALL BE PROVIDED AND INSTALLED IN ACCORDANCE WITH THE LIGHTING PLANS AND WITH THE SPECIFICATIONS.

4. PROVIDE BELDEN #9330 BETWEEN THE POSITION RESOLVER AND DECODER MODULE OR AS RECOMMENDED BY THE POSITION MONITOR EQUIPMENT MANUFACTURER.

5. PROVIDE BELDEN #YR29281 CABLE BETWEEN THE REMOTE PLC AND THE MAIN PLC FOR PLC REMOTE I/O COMMUNICATION OR AS RECOMMENDED BY THE PLC EQUIPMENT MANUFACTURER.

6. ALL MOTOR CONDUCTORS SHALL TERMINATE AT THE MOTOR CONTACTOR TERMINAL POINTS.

CONDUCTOR COLOR CODE

B	BLACK	RB	RED/BLACK
R	RED	BLB	BLUE/BLACK
BL	BLUE	OB	ORANGE/BLACK
O	ORANGE	YB	YELLOW/BLACK
Y	YELLOW	BNB	BROWN/BLACK
BN	BROWN	BR	BLACK/RED

FIELD BOOK:				
SURVEYED:				
SURVEY BASE MAP:				
DESIGN ENTERED:	F. HAYWOOD	10/2009		
DESIGNED	G. PETERS	10/2009		
CHECKED:	R. STEEL	11/2009		
SUPERVISOR:	G. PETERS	01/2010		
NUM.	REVISION		BY	DATE

JOHN G. SCHAILERT · STATE OF WASHINGTON · 45094 · REGISTERED PROFESSIONAL ENGINEER

HNTB

FED. AID No.

PROJECT No. 300197

SURVEY No. 32-24-4-22

MAINTENANCE DIVISION No. 3

KING COUNTY DEPT. OF TRANSPORTATION
HAROLD TANIGUCHI, DIRECTOR

SOUTH PARK BRIDGE #3179 REPLACEMENT

WIRING SCHEDULE-5

King County

BE52

SHEET 657 OF 667 SHEETS

316-63 (___)

CABLE NUMBER	COND COLOR	FROM	TO
S MAIN DRIVE 2			
C175		S DRIVE CONT 2	CONT CONSOLE
	B	9	TB33-1
	R	2	TB33-2
	BL	3	TB33-3
	O	4	TB33-4
	Y	SPARE	SPARE
	BN	SPARE	SPARE
	RB	SPARE	SPARE
C176		S DRIVE CONT 2	REMOTE PLC CAB
	B	SPARE	SPARE
	R	2	TB207-2
	BL	3	TB207-3
	O	4	TB207-4
	Y	5	TB207-5
	BN	6	TB207-6
	RB	7	TB207-7
	BLB	8	TB207-8
	OB	11	TB207-11
	YB	16	TB207-16
	BNB	SPARE	SPARE
	BR	SPARE	SPARE
C177		SSS-2	S DRIVE CONT 2
	B	SSS-2-C	10
	R	SSS-2-NC	1
C178		S DRV MOTOR 2	S DRIVE CONT 2
	B	STPS-2-C	10
	R	STPS-2-NC	9
C179		PNL BD LP2	S DRIVE CONT 2
	B	LP2-5	12
	R	NEUTRAL	14
C180		S DRV MTR 2 HTR	S DRIVE CONT 2
	B	H1	13
	R	H2	14
C181		S TACH GEN 2	S DRIVE CONT 2
	B	POSITIVE	17
	W	NEGATIVE	18
	SHLD	GROUND	19
C182		S DRIVE CONT 2	CONT CONSOLE
	B	21	TB33-10
	W	22	TB33-11
	SHLD	24	TB33-12
C183		S DRIVE CONT 2	REMOTE PLC CAB
	B	22	TB207-13
	W	23	TB207-14
	SHLD	24	TB207-15
C184		S DRIVE CONT 2	CONT CONSOLE
	B	28	TB33-13
	W	29	TB33-14
	SHLD	30	TB33-15
P45		S DRV MTR 2 (ARM)	S DRIVE CONT B
	B1	A1	A1
	B2	A2	A2
	B3	GNG	GND

CABLE NUMBER	COND COLOR	FROM	TO
P46		S DRV MTR 2 (FLD)	S DRIVE CONT B
	B1	F1	F1
	B2	F2	F2
S SPAN POSITION MONITOR			
C185		S POS RESOLVER	REMOTE PLC CAB
	SEE	S1	S1
	NOTE 3	S2	S2
		S3	S3
		S4	S4
		RH	RH
		RL	RL
		SPARE	SPARE
		SPARE	SPARE
C186		REMOTE PLC CAB	CONT CONSOLE
	B	7 (ANALOG POS)	LOOP POS
	W	8 (ANALOG NEG)	LOOP NEG
	SHLD	GND	GND
S DRV SPEED CONT OUTPUT			
C187		S DRV CONT 1 SPD	REMOTE PLC CAB
	B	32	TB215-1
	W	33	TB215-2
	SHLD	34	TB215-3
C188		S DRV CONT 2 SPD	REMOTE PLC CAB
	B	32	TB215-4
	W	33	TB215-5
	SHLD	34	TB215-6
S TWR EQUIP HEAT DET			
C189		S EQUIP HEAT DET	REMOTE PLC CAB
	B	NO	TB208-11
	R	C	TB208-12
S AUXILIARY DRIVE			
C190		MCC-2	REMOTE PLC CAB
	B	1	TB216-18
	R	X2	TB216-2
	BL	3	TB216-3
	O	4	TB216-4
	Y	5	TB216-5
	BN	7	TB216-17
	RB	8	TB216-10
	BLB	9	TB216-9
	OB	13	TB216-13
	YB	14	TB216-14
	BNB	SPARE	SPARE
	BR	SPARE	SPARE
C191		REMOTE PLC CAB	CONT CONSOLE
	B	TB216-1	TB34-1
	R	TB216-2	TB34-2
	BL	TB216-3	TB34-3
	O	TB216-4	TB34-4
	Y	TB216-5	TB34-5
	BN	TB216-6	TB34-6
	RB	TB216-7	TB34-7
	BLB	TB216-8	TB34-8
	OB	TB216-9	TB34-9
	YB	TB216-10	TB34-10
	BNB	SPARE	SPARE
	BR	SPARE	SPARE

CABLE NUMBER	COND COLOR	FROM	TO
C192		S DRIVE CONT 1	REMOTE PLC CAB
	B	26	TB216-6
	R	25	TB216-15
C193		S DRIVE CONT 2	REMOTE PLC CAB
	B	26	TB216-15
	R	25	TB216-16
C194		REMOTE PLC CAB	MAIN PLC CAB
	B	TB216-16	TB126-11
	R	TB216-17	TB126-12
C195		S AUX DRV CLUTCH	REMOTE PLC CAB
	B	LINE	TB216-11
	R	NEUTRAL	TB216-12
C196		MCC-2	PNL BD LP2
	B	17	LP2-6
	R	21	NEUTRAL
C197		S AUX DRV MTR HTR	MCC-2
	B	LOAD	20
	R	COMMON	21
P47		S AUX DRIVE MTR	MCC-2
	B1	T1	T1
	B2	T2	T2
	B3	T3	T3
	B4	GND	GND
	B11	T11	T11
	B12	T12	T12
	B13	T13	T13
PLC COMMUNICATIONS			
C212		REMOTE PLC CAB	MAIN PLC CAB
SEE NOTE 5	B	TB214-1	TB123-1
	W	TB214-2	TB123-2
	SHD	TB214-3	TB123-3
N. LUBE PUMP CONTROL			
C218		MAIN PLC CAB	CONT CONSOLE
	B	TB126-3	TB22-9
	R	TB126-2	TB22-10
	BL	TB126-5	TB22-11
	O	TB126-12	TB22-12
C219		N. PUMP 1 CONT	MAIN PLC CAB
	B	RUN-NO	TB126-1
	R	RUN-COM	TB126-3
	BL	FS-NP1 COM	TB126-6
	O	FS-NP1 NO	TB126-7
	Y	START-LOAD	TB126-8
	BN	START-COM	TB126-9
	RB	SPARE	SPARE
P58		N. PUMP 1 CONT	MCC-1
	B1	T1	T1
	B2	T2	T2
	B3	T3	T3
	B4	GND	GND

CABLE NUMBER	COND COLOR	FROM	TO
C220		N. PUMP 2 CONT	MAIN PLC CAB
	B	RUN-NO	TB126-4
	R	RUN-COM	TB126-5
	BL	FS-NP1 COM	TB126-7
	O	FS-NP1 NO	TB126-12
	Y	START-LOAD	TB126-10
	BN	START-COM	TB126-11
	RB	SPARE	SPARE
P59		N. PUMP 2 CONT	MCC-1
	B1	T1	T1
	B2	T2	T2
	B3	T3	T3
	B4	GND	GND
S. LUBE PUMP CONTROL			
C221		REMOTE PLC CAB	CONT CONSOLE
	B	TB217-3	TB27-9
	R	TB217-2	TB27-10
	BL	TB217-5	TB27-11
	O	TB217-12	TB27-12
C222		S. PUMP 1 CONT	REMOTE PLC CAB
	B	RUN-NO	TB217-1
	R	RUN-COM	TB217-3
	BL	FS-SP1 COM	TB217-6
	O	FS-SP1 NO	TB217-7
	Y	START-LOAD	TB217-8
	BN	START-COM	TB217-9
	RB	SPARE	SPARE
P60		S. PUMP 1 CONT	MCC-2
	B1	T1	T1
	B2	T2	T2
	B3	T3	T3
	B4	GND	GND
C223		S. PUMP 2 CONT	REMOTE PLC CAB
	B	RUN-NO	TB217-4
	R	RUN-COM	TB217-5
	BL	FS-SP1 COM	TB217-7
	O	FS-SP1 NO	TB217-12
	Y	START-LOAD	TB217-10
	BN	START-COM	TB217-11
	RB	SPARE	SPARE
P61		S. PUMP 2 CONT	MCC-2
	B1	T1	T1
	B2	T2	T2
	B3	T3	T3
	B4	GND	GND
N. PIER HEAT TRACE MONITOR			
C224		N. FIRE PROT CONT	MAIN PLC CAB
	B	NO	TB123-9
	R	COM	TB123-10
C225		N. WATER CONT	MAIN PLC CAB
	B	NO	TB123-11
	R	COM	TB123-12

CABLE NUMBER	COND COLOR	FROM	TO
S. PIER HEAT TRACE MONITOR			
C226		S. FIRE PROT CONT	REMOTE PLC CAB
	B	NO	TB214-9
	R	COM	TB214-10
C227		S. WATER CONT	REMOTE PLC CAB
	B	NO	TB214-11
	R	COM	TB214-12
GENERATOR MONITOR			
C228		MAIN PLC CAB	CONT CONSOLE
	B	SPARE	SPARE
	R	TB116-2	TB35-2
	BL	TB116-3	TB35-3
	O	TB116-4	TB35-4
	Y	TB116-5	TB35-5
	BN	TB116-6	TB35-6
	RB	SPARE	SPARE
C228		N. PUMP 2 CONT	MAIN PLC CAB
	B	COMMON	TB116-1
	R	FAULT-NO	TB116-3
	BL	NORM-COM	TB116-4
	O	EMERG-NO	TB116-5
	Y	RUN-NO	TB116-6
	BN	SPARE	SPARE
	RB	SPARE	SPARE

1. PROVIDE INTERNAL JUMPER WIRES IN ACCORDANCE WITH SCHEMATIC DRAWINGS.
2. WIRING FOR INTERCOM SYSTEM IS NOT SCHEDULED. CONDUCTORS AND RACEWAYS SHALL BE PROVIDED AND INSTALLED IN ACCORDANCE WITH MANUFACTURER'S INSTRUCTIONS AND IN ACCORDANCE WITH THE PLANS AND SPECIFICATIONS.
3. LIGHTING AND RECEPTACLE CIRCUITS ARE NOT SCHEDULED. CONDUCTORS AND RACEWAYS SHALL BE PROVIDED AND INSTALLED IN ACCORDANCE WITH THE LIGHTING PLANS AND WITH THE SPECIFICATIONS.
4. PROVIDE BELDEN #9330 BETWEEN THE POSITION RESOLVER AND DECODER MODULE OR AS RECOMMENDED BY THE POSITION MONITOR EQUIPMENT MANUFACTURER.
5. PROVIDE BELDEN #YR29281 CABLE BETWEEN THE REMOTE PLC AND THE MAIN PLC FOR PLC REMOTE I/O COMMUNICATION OR AS RECOMMENDED BY THE PLC EQUIPMENT MANUFACTURER.
6. ALL MOTOR CONDUCTORS SHALL TERMINATE AT THE MOTOR CONTACTOR TERMINAL POINTS.

CONDUCTOR COLOR CODE

B	BLACK	RB	RED/BLACK
R	RED	BLB	BLUE/BLACK
BL	BLUE	OB	ORANGE/BLACK
O	ORANGE	YB	YELLOW/BLACK
Y	YELLOW	BNB	BROWN/BLACK
BN	BROWN	BR	BLACK/RED

FIELD BOOK:			
SURVEYED:			
SURVEY BASE MAP:			
DESIGN ENTERED:	F. HAYWOOD	10/2009	
DESIGNED	G. PETERS	10/2009	
CHECKED:	R. STEEL	11/2009	
SUPERVISOR:	G. PETERS	01/2010	

NUM.	REVISION	BY	DATE

JOHN G. SCHALEBAT — STATE OF WASHINGTON — 45094 — REGISTERED PROFESSIONAL ENGINEER

HNTB

FED. AID No.

PROJECT No. 300197

SURVEY No. 32-24-4-22

MAINTENANCE DIVISION No. 3

KING COUNTY DEPT. OF TRANSPORTATION
HAROLD TANIGUCHI, DIRECTOR

SOUTH PARK BRIDGE #3179 REPLACEMENT

WIRING SCHEDULE-6

King County

BE53

SHEET 658 OF 667 SHEETS

316-63 (____)

CKT #	FROM	TO	CABLE NO.	CABLE SIZE/TYPE	AREA (SQ IN)	ROUTING				
C1	MCC-1	CONTROL CONSOLE	1	12D2	0.142	R1	T2	T1		
C2	MCC-1	MAIN PLC CABINET	1	16E2	0.08	R1	T2	R2		
C3	MCC-1	MAIN PLC CABINET	1	12D2	0.142	R1	T2	R2		
C4	MAIN PLC CABINET	CONTROL CONSOLE	1	12D2	0.142	R2	T2	T1		
C5	AIR HORN	MAIN PLC CABINET	1	12D2	0.142	R4	R3	T4	T3	T2
						R2				
C6	MAIN PLC CABINET	CONTROL CONSOLE	1	12D12	0.497	R2	T2	T1		
C7	NE TRAFFIC GATE	MAIN PLC CABINET	1	12D2	0.142	R10	R8	T3	T2	R2
C8	SW TRAFFIC GATE	MAIN PLC CABINET	1	12D2	0.142	R13	R11	T7	R14	R207
						DUC1	R202	R15	T3	T2
						R2				
C9	NW TRAFFIC GATE	MAIN PLC CABINET	1	12D2	0.142	R9	R8	T3	T2	R2
C10	SE TRAFFIC GATE	MAIN PLC CABINET	1	12D2	0.142	R12	R11	T7	R14	R207
						DUC1	R202	R15	T3	T2
						R2				
C11	NEAR SIDE TRAFFIC SIGNALS	MAIN PLC CABINET	1	12D4	0.193	R16	R8	T3	T2	R2
C12	FAR SIDE TRAFFIC SIGNALS	MAIN PLC CABINET	1	12D4	0.193	R17	R11	T7	R14	R207
						DUC1	R202	R15	T3	T2
						R2				
C13	MAIN PLC CABINET	CONTROL CONSOLE	1	12D4	0.193	R2	T2	T1		
C14	REMOTE PLC CABINET	MAIN PLC CABINET	1	12D4	0.193	R18	T6	T7	R14	R207
						DUC1	R202	R15	T3	T2
						R2				
C15	MAIN PLC CABINET	CONTROL CONSOLE	1	12D2	0.142	R2	T2	T1		
C16	NORTH WARNING BELL	MAIN PLC CABINET	1	12D2	0.142	R9	R8	T3	T2	R2
C17	SOUTH WARNING BELL	MAIN PLC CABINET	1	12D2	0.142	R12	R11	T7	R14	R207
						DUC1	R202	R15	T3	T2
						R2				
C18	MAIN PLC CABINET	CONTROL CONSOLE	1	12D4	0.193	R2	T2	T1		
C19	MAIN PLC CABINET	CONTROL CONSOLE	1	12D12	0.497	R2	T2	T1		
C20	MAIN PLC CABINET	CONTROL CONSOLE	1	12D4	0.193	R2	T2	T1		
C21	MCC-1	MAIN PLC CABINET	1	12D7	0.294	R1	T2	R2		
C22	NW TRAFFIC GATE	MAIN PLC CABINET	1	12D7	0.294	R9	R8	T3	T2	R2
C23	NW TRAFFIC GATE	PANELBOARD LP1	1	12D2	0.142	R9	R8	T2	T3	R19
C24	REMOTE PLC CABINET	CONTROL CONSOLE	1	12D12	0.497	R18	T6	T7	R14	R207
						DUC1	R202	R15	T3	T2
						T1				
C25	REMOTE PLC CABINET	CONTROL CONSOLE	1	12D4	0.193	R18	T6	T7	R14	R207
						DUC1	R202	R15	T3	T2
						T1				
C26	MCC-2	REMOTE PLC CABINET	1	12D7	0.294	R20	T6	R18		
C27	SE TRAFFIC GATE	REMOTE PLC CABINET	1	12D7	0.294	R12	R11	T7	T6	R18
C28	SE TRAFFIC GATE	PANELBOARD LP2	1	12D2	0.142	R12	R11	T7	T6	R21
C29	MCC-1	MAIN PLC CABINET	1	12D7	0.294	R1	T2	R22		
C30	MAIN PLC CABINET	CONTROL CONSOLE	1	12D12	0.497	R22	T2	T1		
C31	MAIN PLC CABINET	CONTROL CONSOLE	1	12D4	0.193	R22	T2	T1		
C32	NE TRAFFIC GATE	MAIN PLC CABINET	1	12D7	0.294	R10	R8	T3	T2	R22
C33	SE TRAFFIC GATE	MAIN PLC CABINET	1	12D2	0.142	R12	R11	T7	R29	R207
						DUC1	R202	R28	T3	T2
						R22				
C34	NE TRAFFIC GATE	PANELBOARD LP1	1	12D2	0.142	R10	R8	T3	T2	R19
C35	MCC-2	REMOTE PLC CABINET	1	12D7	0.294	R20	T6	R18		
C36	REMOTE PLC CABINET	CONTROL CONSOLE	1	12D12	0.497	R18	T6	T7	R14	R207
						DUC1	R202	R15	T3	T2
						T1				
C37	REMOTE PLC CABINET	CONTROL CONSOLE	1	12D4	0.193	R18	T6	T7	R14	R207
						DUC1	R202	R15	T3	T2
						T1				
C38	SW TRAFFIC GATE	REMOTE PLC CABINET	1	12D7	0.294	R13	R11	T7	T6	R18
C39	SW TRAFFIC GATE	PANELBOARD LP2	1	12D2	0.142	R13	R11	T7	T6	R21
C40	NW TRAFFIC GATE	REMOTE PLC CABINET	1	12D2	0.142	R9	R8	T3	R28	R202
						DUC1	R207	R29	T7	T6
						R18				
C41	MCC-1	MAIN PLC CABINET	1	12D7	0.294	R1	T2	R22		
C42	MAIN PLC CABINET	CONTROL CONSOLE	1	12D12	0.497	R22	T2	T1		
C43	NW RESISTANCE GATE	MAIN PLC CABINET	1	12D7	0.294	R23	T3	T2	R22	
C44	NE RESISTANCE GATE	MAIN PLC CABINET	1	12D2	0.142	R24	T4	T3	T2	R22
C45	NW RESISTANCE GATE	PANELBOARD LP1	1	12D2	0.142	R23	T3	T2	R19	
C46	MCC-1	MAIN PLC CABINET	1	12D7	0.294	R1	T2	R22		
C47	MAIN PLC CABINET	CONTROL CONSOLE	1	12D12	0.497	R22	T2	T1		
C48	NE RESISTANCE GATE	MAIN PLC CABINET	1	12D7	0.294	R24	T4	T3	T2	R22
C49	NW RESISTANCE GATE	MAIN PLC CABINET	1	12D2	0.142	R23	T3	R22		
C50	NE RESISTANCE GATE	PANELBOARD LP1	1	12D2	0.142	R24	T4	T3	T2	R19
C51	MCC-2	REMOTE PLC CABINET	1	12D7	0.294	R20	T6	R18		
C52	REMOTE PLC CABINET	CONTROL CONSOLE	1	12D12	0.497	R18	T6	T7	R14	R208
						DUC2	R203	R15	T3	T2
						T1				
C53	SE RESISTANCE GATE	REMOTE PLC CABINET	1	12D7	0.294	R25	T7	T6	R128	
C54	SW RESISTANCE GATE	REMOTE PLC CABINET	1	12D2	0.142	R26	T8	T7	T6	R128
C55	SE RESISTANCE GATE	PANELBOARD LP2	1	12D2	0.142	R25	T7	T6	R21	
C56	MCC-2	REMOTE PLC CABINET	1	12D7	0.294	R20	T6	R128		
C57	REMOTE PLC CABINET	CONTROL CONSOLE	1	12D12	0.497	R128	T6	T7	R29	R208
						DUC2	R203	R28	T3	T2
						T1				
C58	SW RESISTANCE GATE	REMOTE PLC CABINET	1	12D7	0.294	R26	T8	T7	T6	R128
C59	SE RESISTANCE GATE	REMOTE PLC CABINET	1	12D2	0.142	R25	T7	T6	R128	
C60	SW RESISTANCE GATE	PANELBOARD LP2	1	12D2	0.142	R26	T8	T7	T6	R21
C61	MCC-1	MAIN PLC CABINET	1	12D9	0.391	R27	T6	R139		
C62	MAIN PLC CABINET	CONTROL CONSOLE	1	12D12	0.497	R30	T2	T1		
C63	MAIN PLC CABINET	CONTROL CONSOLE	1	12D4	0.193	R30	T2	T1		
C64	WEST SPAN LOCK	MAIN PLC CABINET	1	12D7	0.294	R87	R88	R89	NFLX	R93
						T4	T3	T2	R48	
C65	MAIN PLC CABINET	CONTROL CONSOLE	1	12D12	0.497	R30	T2	T1		
C66	MAIN PLC CABINET	CONTROL CONSOLE	1	12D2	0.142	R30	T2	T1		
C67	WEST SPAN LOCK	MAIN PLC CABINET	1	12D4	0.193	R87	R88	R89	NFLX	R93
						T4	T3	T2	R48	
C68	EAST SPAN LOCK	MAIN PLC CABINET	1	12D4	0.193	R91	R90	R89	NFLX	R93
						T4	T3	T2	R48	
C69	MCC-1	MAIN PLC CABINET	1	12D9	0.391	R27	T2	R30		
C70	MAIN PLC CABINET	CONTROL CONSOLE	1	12D12	0.497	R30	T2	T1		
C71	MAIN PLC CABINET	CONTROL CONSOLE	1	12D4	0.193	R30	T2	T1		
C72	EAST SPAN LOCK	MAIN PLC CABINET	1	12D7	0.294	R91	R88	R89	NFLX	R93
						T4	T3	T2	R48	
C73	MCC-1	MAIN PLC CABINET	1	12D4	0.193	R27	T2	R30		
C74	MAIN PLC CABINET	CONTROL CONSOLE	1	12D7	0.294	R30	T2	T1		
C75	N MOTOR BRAKE A	MAIN PLC CABINET	1	12D4	0.193	R33	T4	T3	T2A	R30
C76	MCC-1	MAIN PLC CABINET	1	12D4	0.193	R27	T2	R30		
C77	MAIN PLC CABINET	CONTROL CONSOLE	1	12D7	0.294	R30	T2	T1		
C78	N MACH BRAKE A	MAIN PLC CABINET	1	12D4	0.193	R34	T4	T3	T2	R30
C79	MCC-1	MAIN PLC CABINET	1	12D4	0.193	R27	T2	R30		
C80	MAIN PLC CABINET	CONTROL CONSOLE	1	12D7	0.294	R123	T2	T1		
C81	N MOTOR BRAKE B	MAIN PLC CABINET	1	12D4	0.193	R35	T4	T3	T2	R123
C82	MCC-1	MAIN PLC CABINET	1	12D4	0.193	R27	T2	R123		
C83	MAIN PLC CABINET	CONTROL CONSOLE	1	12D7	0.294	R30	T2	T1		
C84	N MACH BRAKE B	MAIN PLC CABINET	1	12D4	0.193	R36	T4	T3	T2	R30
C85	LS-N10A	MAIN PLC CABINET	1	12D2	0.142	R40	T4	T3	T2	R30
C86	LS-N10B	MAIN PLC CABINET	1	12D2	0.142	R41	T4	T3	T2	R30
C87	LS-HL1N	MAIN PLC CABINET	1	12D2	0.142	R44	R42	T4	T3	T2
						R123				
C88	LS-HL2N	MAIN PLC CABINET	1	12D2	0.142	R47	R45	R42	T4	T3
						T2	R123			
C89	N ROTARY LIMIT SW	MAIN PLC CABINET	1	12D12	0.497	R43	R42	T4	T3	T2
						R48				
C90	MAIN PLC CABINET	CONTROL CONSOLE	1	12D9	0.391	R48	T2	T1		
C91	LS-1N	MAIN PLC CABINET	1	12D2	0.142	R46	R45	R42	T4	T3
						T2	R48			
C92	MAIN PLC CABINET	CONTROL CONSOLE	1	12D12	0.497	R48	T2	T1		
C93	MAIN PLC CABINET	CONTROL CONSOLE	1	12D7	0.294	R48	T2	T1		
C94	N DRIVE CONTROLLER 1	CONTROL CONSOLE	1	12D7	0.294	R51	T2	T1		
C95	N DRIVE CONTROLLER 1	MAIN PLC CABINET	1	12D12	0.497	R51	T2	R48		
C96	N OVERSPEED SW 1	N DRIVE CONTROLLER 1	1	12D2	0.142	R49	T4	T3	T2	R51
C97	N DRIVE MOTOR 1	N DRIVE CONTROLLER 1	1	12D2	0.142	R53	T4	T3	T2	R51
C98	MAIN PLC CABINET	CONTROL CONSOLE	1	12D2	0.142	R48	T2	T1		
C99	PANELBOARD LP1	N DRIVE CONTROLLER 1	1	12D2	0.142	R54	T2	R51		
C100	N DRIVE MOTOR 1 HEATER	N DRIVE CONTROLLER 1	1	12D2	0.142	R53	T4	T3	T2	R51
C101	N TACHOMETER 1	N DRIVE CONTROLLER 1	1	16E2	0.080	R49	T4	T3	T2	R51
C102	N DRIVE CONTROLLER 1	CONTROL CONSOLE	1	16E2	0.080	R51	T2	T1		
C103	N DRIVE CONTROLLER 1	MAIN PLC CABINET	1	16E2	0.080	R51	T2	R48		
C104	N DRIVE CONTROLLER 1	CONTROL CONSOLE	1	16E2	0.080	R51	T2	T1		
C105	N DRIVE CONTROLLER 2	CONTROL CONSOLE	1	12D7	0.294	R52	T2	T1		
C106	N DRIVE CONTROLLER 2	MAIN PLC CABINET	1	12D12	0.497	R52	T2	R48		
C107	N OVERSPEED SW 2	N DRIVE CONTROLLER 2	1	12D2	0.142	R50	T4	T3	T2	R52
C108	N DRIVE MOTOR 2	N DRIVE CONTROLLER 2	1	12D2	0.142	R39	T4	T3	T2	R52
C109	PANELBOARD LP1	N DRIVE CONTROLLER 2	1	12D2	0.142	R54	T2	R52		
C110	N DRIVE MOTOR 2 HEATER	N DRIVE CONTROLLER 2	1	12D2	0.142	R39	T4	T3	T2	R52
C111	N TACHOMETER 2	N DRIVE CONTROLLER 2	1	16E2	0.080	R50	T4	T3	T2	R52
C112	N DRIVE CONTROLLER 2	CONTROL CONSOLE	1	16E2	0.080	R52	T2	T1		
C113	N DRIVE CONTROLLER 2	MAIN PLC CABINET	1	16E2	0.080	R52	T2	R48		
C114	N DRIVE CONTROLLER 2	CONTROL CONSOLE	1	16E2	0.080	R52	T2	T1		
C115	N POSITION RESOLVER	MAIN PLC CABINET	1	22S7	0.101	R43	T4	T3	T2	R48
C116	MAIN PLC CABINET	CONTROL CONSOLE	1	16E2	0.080	R139	T2	T1		
C117	N DRIVE CONTROLLER 1	MAIN PLC CABINET	1	16E2	0.080	R51	T2	R139		
C118	N DRIVE CONTROLLER 2	MAIN PLC CABINET	1	16E2	0.080	R52	T2	R139		
C119	MCC-1	MAIN PLC CABINET	1	12D12	0.497	R27	T2	R139		
C120	MAIN PLC CABINET	CONTROL CONSOLE	1	12D12	0.497	R139	T2	T1		
C121	N DRIVE CONTROLLER 1	MAIN PLC CABINET	1	12D2	0.142	R51	T2	R123		
C122	N DRIVE CONTROLLER 2	MAIN PLC CABINET	1	12D2	0.142	R52	T2	R123		
C123	N AUX DRIVE CLUTCH RECT	MAIN PLC CABINET	1	12D2	0.142	R37	T4	T3	T2	R123
C124	MCC-1	PANELBOARD LP1	1	12D2	0.142	R27	T2	R19		
C125	N AUX DRIVE MOTOR HTR	MCC-1	1	12D2	0.142	R38	T4	T3	T2	R27
C126	MAIN PLC CABINET	CONTROL CONSOLE	1	12D4	0.193	R123	T2	T1		
C127	N SUMP PUMP PANEL	MAIN PLC CABINET	1	12D2	0.142	R94	T4	T3	T2	R123

NUMBER OF CABLES
CONDUCTORS AWG
NUMBER OF CONDUCTORS
CABLE TYPE (SEE SPECIAL PROVISIONS)

FIELD BOOK:
SURVEYED:
SURVEY BASE MAP:
DESIGN ENTERED: F. HAYWOOD 10/2009
DESIGNED G. PETERS 10/2009
CHECKED: R. STEEL 11/2009
SUPERVISOR: G. PETERS 01/2010

NUM.	REVISION	BY	DATE

JOHN G. SCHALLERT — STATE OF WASHINGTON — 45604 — REGISTERED PROFESSIONAL ENGINEER

HNTB

FED. AID No.
PROJECT No. 300197
SURVEY No. 32-24-4-22
MAINTENANCE DIVISION No. 3

KING COUNTY DEPT. OF TRANSPORTATION
HAROLD TANIGUCHI, DIRECTOR

SOUTH PARK BRIDGE #3179 REPLACEMENT

CIRCUIT SCHEDULE-1

King County

BE54

SHEET 659 OF 667 SHEETS

316-63 (___)

CKT #	FROM	TO	CABLE NO.	CABLE SIZE/ TYPE	AREA (SQ IN)	ROUTING				
C128	MAIN PLC CABINET	CONTROL CONSOLE	1	12D4	0.193	R123	T2	T1		
C129	MCC-2	REMOTE PLC CABINET	1	12D4	0.193	R32	T6	R31		
C130	REMOTE PLC CABINET	CONTROL CONSOLE	1	12D7	0.294	R31	T6	T7	R29	R208
						DUC2	R203	R28	T3	T2
						T1				
C131	S MOTOR BRAKE A	REMOTE PLC CABINET	1	12D4	0.193	R55	T8	T7	T6	R31
C132	MCC-2	REMOTE PLC CABINET	1	12D4	0.193	R32	T6	R31		
C133	REMOTE PLC CABINET	CONTROL CONSOLE	1	12D7	0.294	R31	T6	T7	R29	R208
						DUC2	R203	R28	T3	T2
						T1				
C134	S MACH BRAKE A	REMOTE PLC CABINET	1	12D4	0.193	R58	T8	T7	T6	R31
C135	MCC-2	REMOTE PLC CABINET	1	12D4	0.193	R32	T6	R31		
C136	REMOTE PLC CABINET	CONTROL CONSOLE	1	12D7	0.294	R31	T6	T7	R29	R208
						DUC2	R203	R28	T3	T2
						T1				
C137	S MOTOR BRAKE B	REMOTE PLC CABINET	1	12D4	0.193	R60	T8	T7	T6	R31
C138	MCC-2	REMOTE PLC CABINET	1	12D4	0.193	R32	T6	R31		
C139	REMOTE PLC CABINET	CONTROL CONSOLE	1	12D7	0.294	R31	T6	T7	R29	R208
						DUC2	R203	R28	T3	T2
						T1				
C140	S MACH BRAKE B	REMOTE PLC CABINET	1	12D4	0.193	R63	T8	T7	T6	R31
C141	LS-S10A	REMOTE PLC CABINET	1	12D2	0.142	R70	T8	T7	T6	R31
C142	LS-S10B	REMOTE PLC CABINET	1	12D2	0.142	R71	T8	T7	T6	R31
C143	LS-HL1S	REMOTE PLC CABINET	1	12D2	0.142	R66	R64	T8	T7	T6
						R31				
C144	LS-HL2S	REMOTE PLC CABINET	1	12D2	0.142	R68	R67	R64	T8	T7
						T6	R31			
C145	S ROTARY LS	REMOTE PLC CABINET	1	12D12	0.497	R65	R64	T8	T7	T6
						R31				
C146	REMOTE PLC CABINET	CONTROL CONSOLE	1	12D9	0.391	R128	T6	T7	T8	R29
						R208	DUC2	R203	R28	T3
						T2	T1			
C147	LS-1S	REMOTE PLC CABINET	1	12D2	0.142	R69	R67	R64	T8	T7
						T6	R31			
C148	S SUMP PUMP PANEL	REMOTE PLC CABINET	1	12D2	0.142	R99	T8	T7	T6	R81
C149	MAIN PLC CABINET	CONTROL CONSOLE	1	12D4	0.193	R139	T2	T1		
C150	NAV LIGHT PHOTOCELL	MAIN PLC CABINET	1	12D4	0.193	R76	T2	R123		
C151	NW SPAN CHANNEL NAV LT	MAIN PLC CABINET	1	12D4	0.193	R86	R88	R89	NFLX	R93
						T4	T3	T2	R123	
C152	NW SPAN CHANNEL NAV LT	NE SPAN CHANNEL NAV LT	1	12D4	0.193	R86	R88	R90	R92	
C153	NW FENDER NAV LT	MAIN PLC CABINET	1	12D2	0.142	R6	R3	T4	T3	T2
						R123				
C154	NW FENDER NAV LT	N MID FENDER NAV LT	1	12D2	0.142	R6	R5			
C155	N MID FENDER NAV LT	NE FENDER NAV LT	1	12D2	0.142	R5	R7			
C156	NE FENDER NAV LT	N CLEARANCE GUAGE LT	1	12D2	0.142	R77				
C157	REMOTE PLC CABINET	MAIN PLC CABINET	1	12D2	0.142	R31	T6	T7	R29	R209
						DUC3	R204	R28	T3	T2
						R123				
C158	SE SPAN CHANNEL NAV LT	REMOTE PLC CABINET	1	12D4	0.193	R97	R96	SFLX	R98	T8
						T7	T6	R81		
C159	SE SPAN CHANNEL NAV LT	SW SPAN CHANNEL NAV LT	1	12D4	0.193	R97	R95			
C160	S MID FENDER NAV LT	REMOTE PLC CABINET	1	12D2	0.142	R74	R72	T8	T7	T6
						R31				
C161	SW FENDER NAV LT	S MID FENDER NAV LT	1	12D2	0.142	R73	R74			
C162	S MID FENDER NAV LT	SE FENDER NAV LT	1	12D2	0.142	R74	R75			
C163	SW FENDER NAV LT	S CLEARANCE GUAGE LT	1	12D2	0.142	R78				
C164	MAIN PLC CABINET	CONTROL CONSOLE	1	12D4	0.193	R123	T2	T1		
C165	S DRIVE CONTROLLER 1	CONTROL CONSOLE	1	12D7	0.294	R79	T6	T7	R29	R209
						DUC3	R204	R28	T3	T2
						T1				
C166	S DRIVE CONTROLLER 1	REMOTE PLC CABINET	1	12D12	0.497	R80	T6	R81		
C167	S OVERSPEED SWITCH 1	S DRIVE CONTROLLER 1	1	12D2	0.142	R57	T8	T7	T6	R80
C168	S DRIVE MOTOR 1	S DRIVE CONTROLLER 1	1	12D2	0.142	R56	T8	T7	T6	R80
C169	PANELBOARD LP2	S DRIVE CONTROLLER 1	1	12D2	0.142	R82	T6	R80		
C170	S DRIVE MOTOR 1 HEATER	S DRIVE CONTROLLER 1	1	12D2	0.142	R56	T8	T7	T6	R80
C171	S TACHOMETER 1	S DRIVE CONTROLLER 1	1	16E2	0.08	R57	T8	T7	T6	R80
C172	S DRIVE CONTROLLER 1	CONTROL CONSOLE	1	16E2	0.08	R80	T6	T7	R84	R207
						DUC1	R202	R85	T3	T2
						T1				
C173	S DRIVE CONTROLLER 1	REMOTE PLC CABINET	1	16E2	0.08	R80	T6	R81		
C174	S DRIVE CONTROLLER 1	CONTROL CONSOLE	1	16E2	0.08	R80	T6	T7	R84	R207
						DUC1	R202	R85	T3	T2
						T1				
C175	S DRIVE CONTROLLER 2	CONTROL CONSOLE	1	12D7	0.294	R79	T6	T7	R29	R209
						DUC3	R204	R28	T3	T2
						T1				
C176	S DRIVE CONTROLLER 2	REMOTE PLC CABINET	1	12D12	0.497	R79	T6	R81		
C177	S OVERSPEED SWITCH 2	S DRIVE CONTROLLER 2	1	12D2	0.142	R83	T8	T7	T6	
C178	S DRIVE MOTOR 2	S DRIVE CONTROLLER 2	1	12D2	0.142	R62	T8	T7	T6	
C179	PANELBOARD LP2	S DRIVE CONTROLLER 2	1	12D2	0.142	R82	T6	R79		
C180	S DRIVE MOTOR 2 HEATER	S DRIVE CONTROLLER 2	1	12D2	0.142	R62	T8	T7	T6	

NUMBER OF CABLES
CONDUCTORS AWG
NUMBER OF CONDUCTORS
CABLE TYPE (SEE SPECIAL PROVISIONS)

CKT #	FROM	TO	CABLE NO.	CABLE SIZE/ TYPE	AREA (SQ IN)	ROUTING				
C181	S TACHOMETER 2	S DRIVE CONTROLLER 2	1	16E2	0.08	R83	T8	T7	T6	R79
C182	S DRIVE CONTROLLER 2	REMOTE PLC CABINET	1	16E2	0.08	R79	T6	R81		
C183	S DRIVE CONTROLLER 2	REMOTE PLC CABINET	1	16E2	0.08	R79	T6	R81		
C184	S DRIVE CONTROLLER 2	CONTROL CONSOLE	1	16E2	0.08	R79	T6	T7	R84	R208
							DUC2	R203	R85	T3	T2
						T1				
C185	S POSITION RESOLVER	REMOTE PLC CABINET	1	22S7	0.101	R65	R64	T8	T7	T6
						R81				
C186	REMOTE PLC CABINET	CONTROL CONSOLE	1	16E2	0.08	R81	T6	T7	R84	R208
							DUC2	R203	R85	T3	T2
						T1				
C187	S DRIVE CONTROLLER 1	REMOTE PLC CABINET	1	16E2	0.08	R80	T6	R81		
C188	S DRIVE CONTROLLER 2	REMOTE PLC CABINET	1	16E2	0.08	R79	T6	R81		
C189	S TWR EQUIP LVL SMOKE DET	REMOTE PLC CABINET	1	12D2	0.142	R84	T6	R81		
C190	MCC-2	REMOTE PLC CABINET	1	12D12	0.497	R32	T6	R81		
C191	REMOTE PLC CABINET	CONTROL CONSOLE	1	12D12	0.497	R81	T6	T7	R29	R209
							DUC3	R204	R28	T1	
C192	S DRIVE CONTROLLER 1	REMOTE PLC CABINET	1	12D2	0.142	R80	T6	R81		
C193	S DRIVE CONTROLLER 2	REMOTE PLC CABINET	1	12D2	0.142	R79	T6	R81		
C194	REMOTE PLC CABINET	MAIN PLC CABINET	1	12D2	0.142	R81	T6	T7	R29	R209
							DUC3	R204	R28	T3	T2
						R123				
C195	S AUX DRIVE CLUTCH RECT	REMOTE PLC CABINET	1	12D2	0.142	R59	T8	T7	T6A	R81
C196	MCC-2	PANELBOARD LP2	1	12D2	0.142	R32	T6	R82		
C197	S AUX DRIVE MOTOR HTR	MCC-2	1	12D2	0.142	R61	T8	T7	T6	R32
C198	S CROSS CHNL CABLE TER CAB	CCTV EQUIPMENT CABINET	1	26F6	0.064	R209	DUC3	R204	R100	T3
							T2	R101		
C199	S CROSS CHNL TERM CAB	CCTV CAMERA ON POLE #11	1	CAT5	0.032	R103	T7	T8	R199	
C200	S CROSS CHNL TERM CAB	S TOWER PIER CCTV CAMERA	1	CAT5	0.032	R103	T7	T8	R104	R106
C201	S CROSS CHNL TERM CAB	S TOWER WIRELESS RADIO	1	CAT5	0.032	R103	T7	T6	R107	
C202	PANELBOARD LP2	S TOWER WIRELESS RADIO	1	12D2	0.142	R108	T6	R109		
C203	PANELBOARD LP2	S TOWER PIER CCTV CAMERA	1	12D2	0.142	R108	T6	T7	T8	R105
						R106				
C204	PANELBOARD LP2	CCTV CAMERA ON POLE #11	1	12D2	0.142	R108	T6	T7	T8	R110
C205	CCTV EQUIPMENT CABINET	CCTV CAMERA ON POLE #14	1	CAT5	0.032	R101	T2	T3	T4	R117
C206	CCTV EQUIPMENT CABINET	N TOWER WIRELESS RADIO	1	CAT5	0.032	R101	T2	R114		
C207	CCTV EQUIPMENT CABINET	N TOWER PIER CCTV CAMERA	1	CAT5	0.032	R101	T2	T3	T4	R111
						R113				
C208	PANELBOARD LP1	CCTV CAMERA ON POLE #14	1	12D2	0.142	R116	T2	T3	T4	R118
C209	PANELBOARD LP1	N TOWER WIRELESS RADIO	1	12D2	0.142	R116	T2	R115		
C210	PANELBOARD LP1	N TOWER PIER CCTV CAMERA	1	12D2	0.142	R116	T2	T3	T4	R112
						R113				
C211	PANELBOARD LP1	QUADPLEX OUTLET	1	12D2	0.142	R116	T2	R102		
C212	REMOTE PLC CABINET	MAIN PLC CABINET	1	18S2	0.3	R81	T6	T7	R29	R209
						DUC3	R204	R28	T3	T2
						R123				
C213	N TOWER CLOCK CONTROLLER	PANELBOARD LP1	1	12D4	0.193	R140	T2	R54		
C214	N TOWER CLOCK CONTROLLER	N TOWER CLOCK	1	12D4	0.193	R210				
C215	S TOWER CLOCK CONTROLLER	PANELBOARD LP2	1	12D4	0.193	R211	T6	R82		
C216	S TOWER CLOCK CONTROLLER	S TOWER CLOCK	1	12D4	0.193	R212				
C217	REMOTE PLC CABINET	MAIN PLC CABINET	1	12D2	0.142	R81	T6	T7	R29	R209
						DUC3	R204	R28	T3	T2
						R123				
C218	MAIN PLC CABINET	CONTROL CONSOLE	1	12D4	0.193	R123	T2	T1		
C219	N LUBE PUMP 1 CONTROLLER	MAIN PLC CABINET	1	12D7	0.294	R213	T4	T3	T2	R123
C220	N LUBE PUMP 2 CONTROLLER	MAIN PLC CABINET	1	12D7	0.294	R215	T4	T3	T2	R123
C221	REMOTE PLC CABINET	CONTROL CONSOLE	1	12D4	0.193	R128	T6	T7	R84	R209
							DUC3	R204	R85	T3	T2
						T1				
C222	S LUBE PUMP 1 CONTROLLER	REMOTE PLC CABINET	1	12D7	0.294	R219	T8	T7	T6	R84
						R208	DUC3	R204	R85	T3
						T2	R128			
C223	S LUBE PUMP 2 CONTROLLER	REMOTE PLC CABINET	1	12D7	0.294	R217	T8	T7	T6	R84
						R208	DUC3	R204	R85	T3
						T2	R128			
C224	N FIRE PROTECT HEAT TRACE	MAIN PLC CABINET	1	12D2	0.142	R193	T3	T2	R123	
C225	N WATER LINE HEAT TRACE	MAIN PLC CABINET	1	12D2	0.142	R200	T3	T2	R123	
C226	S FIRE PROTECT HEAT TRACE	REMOTE PLC CABINET	1	12D2	0.142	R196	T7	T6	R128	
C227	S WATER LINE HEAT TRACE	REMOTE PLC CABINET	1	12D2	0.142	R201	T7	T6	R128	
C228	MAIN PLC CABINET	CONTROL CONSOLE	1	12D7	0.294	R224	T3	T2	T1	
C229	GEN. TRANS. SW.	MAIN PLC CABINET	1	12D7	0.294	R224	T3	T2	R22	

FIELD BOOK:			
SURVEYED:			
SURVEY BASE MAP:			
DESIGN ENTERED:	F. HAYWOOD	10/2009	
DESIGNED	G. PETERS	10/2009	
CHECKED:	R. STEEL	11/2009	
SUPERVISOR:	G. PETERS	01/2010	

NUM.	REVISION	BY	DATE

JOHN G. SCHALLERT — STATE OF WASHINGTON — 45604 — REGISTERED PROFESSIONAL ENGINEER

HNTB

FED. AID No.

PROJECT No. 300197

SURVEY No. 32-24-4-22

MAINTENANCE DIVISION No. 3

KING COUNTY DEPT. OF TRANSPORTATION
HAROLD TANIGUCHI, DIRECTOR

SOUTH PARK BRIDGE #3179 REPLACEMENT

CIRCUIT SCHEDULE-2

King County

BE55

SHEET 660 OF 667 SHEETS

316-63 (___)

CKT #	FROM	TO	CABLE NO.	CABLE SIZE/TYPE	AREA (SQ IN)	ROUTING				
P1A	UTILITY SERVICE DISC SWIT	AUTO TRANS SWITCH	5	350B1	2.65	R191A				
P1B	UTILITY SERVICE DISC SWIT	AUTO TRANS SWITCH	5	350B1	2.65	R191B				
P2A	AUTO TRANS SWITCH	CONT HOUSE DISC SWITCH	5	350B1	2.65	R121A	T3	R120A		
P2B	AUTO TRANS SWITCH	CONT HOUSE DISC SWITCH	5	350B1	2.65	R121B	T3	R120B		
P3A	EMERGENCY GENERATOR	AUTO TRANS SWITCH	5	4/0B1	1.635	R192A				
P3B	EMERGENCY GENERATOR	AUTO TRANS SWITCH	5	4/0B1	1.635	R192B				
P4A	CONT HOUSE DISC SWITCH	MCC-1	5	350B1	2.65	R119A	T3	T2	R122A	
P4B	CONT HOUSE DISC SWITCH	MCC-1	5	350B1	2.65	R119B	T3	T2	R122B	
P5	MCC-2	MCC-1	5	350B1	2.65	R126	T6	T7	R125	R206
						DUC4	R205	R124	T3	T2
						R138				
P6	TRANSFORMER TX-1	MCC-1	1	6H3	0.529	R127	T3	T2	R135	
P7	TRANSFORMER TX-1	PANELBOARD LP-1	3	250B1	1.026	R135	T2	R137		
P8	NW TRAFFIC GATE	MCC-1	1	12H3	0.212	R180	R179	T3	T2	R135
P9	NE TRAFFIC GATE	MCC-1	1	12H3	0.212	R181	R179	T3	T2	R135
P10	NW RESISTANCE GATE	MCC-1	1	12H3	0.212	R155	T3	T2	R135	
P11	NE RESISTANCE GATE	MCC-1	1	12H3	0.212	R154	T4	T3	T2C	R135
P12	WEST SPAN LOCK	MCC-1	1	12H3	0.212	R152	R151	NFLX	R150	T4
						T3	T2	R136		
P13	EAST SPAN LOCK	MCC-1	1	12H3	0.212	R153	R151	NFLX	R150	T4
						T3	T2	R136		
P14	N MOTOR BRAKE A	MCC-1	1	12H3	0.212	R141	T4	T3	T2	R136
P15	N MOTOR BRAKE B	MCC-1	1	12H3	0.212	R145	T4	T3	T2	R136
P16	N MACH BRAKE A	MCC-1	1	12H3	0.212	R143	T4	T3	T2	R136
P17	N MACH BRAKE B	MCC-1	1	12H3	0.212	R147	T4	T3	T2	R136
P18	N DRIVE 1 TRANS TX-3	MCC-1	1	2/0H3	1.48	R129	T3	T2	R185	
P19	N DRIVE 1 TRANS TX-3	N DRIVE CONTROLLER 1	1	2/0H3	1.48	R130	T3	T2	R133	
P20	N DRIVE MOTOR 1 (ARM)	N DRIVE CONTROLLER 1	3	1/0B1	0.567	R142	T4	T3	T2	R133
P21	N DRIVE MOTOR 1 (FLD)	N DRIVE CONTROLLER 1	1	10H3	0.268	R142	T3	T2	R133	
P22	N DRIVE 2 TRANS TX-4	MCC-1	1	2/0H3	1.48	R131	T3	T2	R185	
P23	N DRIVE 2 TRANS TX-4	N DRIVE CONTROLLER 2	1	2/0H3	1.48	R132	T3	T2	R134	
P24	N DRIVE MOTOR 2 (ARM)	N DRIVE CONTROLLER 2	3	1/0B1	0.567	R144	T4	T3	T2	R134
P25	N DRIVE MOTOR 2 (FLD)	N DRIVE CONTROLLER 2	1	10H3	0.268	R144	T4	T3	T2	R134
P26	N AUXILIARY DRIVE MOTOR	MCC-1	2	4H3	1.24	R146	T4	T3	T2	R186
P27	N SUMP PUMP CONTROLLER	MCC-1	1	12H3	0.212	R148	T3	T2	R186	
P28	N. HEAT PUMP	MCC-1	1	10H3	0.268	R149	T3	T2	R186	
P29	TRANSFORMER TX-2	MCC-2	1	6H3	0.529	R166	T7	T6	R156	
P30	TRANSFORMER TX-2	PANELBOARD LP-2	3	4/0B1	0.981	R167	T7	T6	R160	
P31	SW TRAFFIC GATE	MCC-2	1	12H3	0.212	R184	R182	T7	T6	R156
P32	SE TRAFFIC GATE	MCC-2	1	12H3	0.212	R183	R182	T7	T6	R156
P33	SW RESISTANCE GATE	MCC-2	1	12H3	0.212	R178	T8	T7	T6	R156
P34	SE RESISTANCE GATE	MCC-2	1	12H3	0.212	R168	T7	T6	R156	
P35	S MOTOR BRAKE A	MCC-2	1	12H3	0.212	R169	T8	T7	T6	R157
P36	S MOTOR BRAKE B	MCC-2	1	12H3	0.212	R173	T8	T7	T6	R157
P37	S MACHINERY BRAKE A	MCC-2	1	12H3	0.212	R171	T8	T7	T6	R157
P38	S MACHINERY BRAKE B	MCC-2	1	12H3	0.212	R175	T8	T7	T6	R157
P39	S DRIVE TRANS TX-5	MCC-2	1	2/0H3	1.48	R164	T7	T6	R188	
P40	S DRIVE TRANS TX-5	S DRIVE CONTROLLER 1	1	2/0H3	1.48	R165	T7	T6	R158	
P41	S DRIVE MOTOR 1 (ARM)	S DRIVE CONTROLLER 1	3	1/0B1	0.567	R170	T8	T7	T6	R158
P42	S DRIVE MOTOR 1 (FLD)	S DRIVE CONTROLLER 1	1	10H3	0.268	R170	T8	T7	T6	R158
P43	S DRIVE TRANS TX-6	MCC-2	1	2/0H3	1.48	R162	T7	T6	R188	
P44	S DRIVE TRANS TX-6	S DRIVE CONTROLLER 2	1	2/0H3	1.48	R163	T7	T6	R159	
P45	S DRIVE MOTOR 2 (ARM)	S DRIVE CONTROLLER 2	3	1/0B1	0.567	R174	T8	T7	T6	R159
P46	S DRIVE MOTOR 2 (FLD)	S DRIVE CONTROLLER 2	1	10H3	0.268	R174	T8	T7	T6	R159
P47	S AUX DRIVE MOTOR	MCC-2	2	4H3	1.24	R172	T8	T7	T6	R189
P48	S SUMP PUMP CONTROLLER	MCC-2	1	12H3	0.212	R177	T7	T6	R189	
P49	S HEAT PUMP	MCC-2	1	10H3	0.268	R176	T7	T6	R189	
P50	N TOWER AIR HANDLER AH-1	PANELBOARD LP1	1	10H3	0.268	R187	T3	T2	R137	
P51	S TOWER AIR HANDLER AH-1	PANELBOARD LP2	1	10H3	0.268	R190	T7	T6	R161	
P52	N FIRE PROTECT HEAT TRACE	PANELBOARD LP1	1	10H3	0.268	R193	T3	T2	R137	
P53	N FIRE PROTECT HEAT TRACE	N HEAT TRACE PWR CONNECT	1	10H3	0.268	R194				
P54	S FIRE PROTECT HEAT TRACE	PANELBOARD LP2	1	10H3	0.268	R196	T7	T6	R161	
P55	S FIRE PROTECT HEAT TRACE	S HEAT TRACE PWR CONNECT	1	10H3	0.268	R197				
P56	N WATER LINE HEAT TRACE	PANELBOARD LP1	1	10H3	0.268	R200	T3	T2	R137	
P57	S WATER LINE HEAT TRACE	PANELBOARD LP2	1	10H3	0.268	R201	T7	T6	R161	
P58	N LUBE PUMP 1 CONTROLLER	MCC-1	1	12H3	0.212	R214	T4	T3	T2	R135
P59	N LUBE PUMP 2 CONTROLLER	MCC-1	1	12H3	0.212	R216	T4	T3	T2	R135
P60	S LUBE PUMP 1 CONTROLLER	MCC-2	1	12H3	0.212	R220	T8	T7	T6	R157
P61	S LUBE PUMP 2 CONTROLLER	MCC-2	1	12H3	0.212	R218	T8	T7	T6	R157
P62	PANEL BOARD LP1	N. LUBE SYSTEM CONTROLLER	1	12H3	0.212	R137	T2	T3	T4	R221
P63	PANEL BOARD LP2	N. LUBE SYSTEM CONTROLLER	1	12H3	0.212	R161	T6	T7	T8	R222
P64	MINI POWERZONE	MCC-1	1	8H3	0.349	R223	T3	T2	R186	
P65	MAIN PLC CABINET (PP1)	PANELBOARD LP1	1	6H3	0.529	R136	T2	R137		
P66	REMOTE PLC CABINET (PP2)	PANELBOARD LP2	1	6H3	0.529	R157	T6	R161		

CKT #	FROM	TO	CABLE NO.	CABLE SIZE/TYPE	AREA (SQ IN)	ROUTING

NUMBER OF CABLES
CONDUCTORS AWG
NUMBER OF CONDUCTORS
CABLE TYPE (SEE SPECIAL PROVISIONS)

FIELD BOOK:			
SURVEYED:			
SURVEY BASE MAP:			
DESIGN ENTERED:	F. HAYWOOD	10/2009	
DESIGNED	G. PETERS	10/2009	
CHECKED:	R. STEEL	11/2009	
SUPERVISOR:	G. PETERS	01/2010	

NUM.	REVISION	BY	DATE

JOHN G. SCHALLERT — STATE OF WASHINGTON — 45604 — REGISTERED PROFESSIONAL ENGINEER

HNTB

FED. AID No.

PROJECT No. 300197

SURVEY No. 32-24-4-22

MAINTENANCE DIVISION No. 3

KING COUNTY DEPT. OF TRANSPORTATION
HAROLD TANIGUCHI, DIRECTOR

SOUTH PARK BRIDGE #3179 REPLACEMENT

CIRCUIT SCHEDULE-3

King County

BE56

SHEET 661 OF 667 SHEETS

316-63 (___)

RCWY NUMBER	TYPE	SIZE	AREA (SQ IN)	CIRCUIT ASSIGNMENTS				
				1	2	3	4	5
R1	GRS	2.5	1.540	C1	C2	C3	C21	C29
				C41	C46			
R2	GRS	4	4.189	C2	C3	C4	C5	C6
				C7	C8	C9	C10	C11
				C12	C13	C14	C15	C16
				C17	C18	C19	C20	C21
				C22				
R3	PVGR	1.25	0.284	C5	C153			
R4	PVGR	0.75	0.142	C5				
R5	PVGR	1.25	0.284	C154	C155			
R6	PVGR	1.25	0.284	C153	C154			
R7	PVGR	0.75	0.142	C155				
R8	PVGR	3	2.211	C7	C9	C11	C16	C22
				C23	C32	C34	C40	C43
				C44	C45			
R9	PVGR	2	1.014	C9	C16	C22	C23	C40
R10	PVGR	1.5	0.578	C7	C32	C34		
R11	PVGR	2.5	1.633	C8	C10	C12	C17	C27
				C28	C33	C38	C39	
R12	PVGR	2	0.862	C10	C17	C27	C28	C33
R13	PVGR	1.25	0.578	C8	C38	C39		
R14	GRS	3	2.638	C8	C10	C12	C14	C17
				C24	C25	C36	C37	C52
R15	GRS	3	2.638	C8	C10	C12	C14	C17
				C24	C25	C36	C37	C52
R16	PVGR	0.75	0.193	C11				
R17	PVGR	0.75	0.193	C12				
R18	GRS	4	3.631	C14	C24	C25	C26	C27
				C35	C36	C37	C38	C40
				C51	C52			
R19	GRS	1.5	0.710	C23	C34	C45	C50	C124
R20	GRS	2	1.176	C26	C35	C51	C56	
R21	GRS	1.25	0.568	C28	C39	C55	C60	
R22	GRS	4	4.168	C29	C30	C31	C32	C33
				C41	C42	C43	C44	C46
				C47	C48	C49	C229	
R23	GRS	1.5	0.578	C43	C45	C49		
R24	PVGR	1.25	0.436	C48	C50			
R25	GRS	1.25	0.578	C53	C55	C59		
R26	PVGR	1.25	0.578	C54	C58	C60		
R27	GRS	3	2.335	C61	C69	C73	C76	C79
				C82	C119	C124	C125	
R28	GRS	4	3.797	C33	C40	C57	C130	C133
				C136	C139	C146	C157	C165
				C175	C191	C194	C212	C217
R29	GRS	4	3.797	C33	C40	C57	C130	C133
				C136	C139	C146	C157	C165
				C175	C191	C194	C212	C217
R30	GRS	4	4.734	C62	C63	C65	C66	C69
				C70	C71	C73	C74	C75
				C76	C77	C78	C79	C83
				C84	C85	C86		
R31	GRS	4	4.211	C129	C130	C131	C132	C133
				C134	C135	C136	C137	C138
				C139	C140	C141	C142	C143
				C144	C145	C147	C157	C160
R32	GRS	2.5	1.553	C129	C132	C135	C138	C190
				C196	C197			
R33	PVGR	0.75	0.193	C75				
R34	PVGR	0.75	0.193	C78				
R35	PVGR	0.75	0.193	C81				
R36	PVGR	0.75	0.193	C84				
R37	PVGR	0.75	0.142	C123				
R38	PVGR	0.75	0.142	C125				
R39	PVGR	1.25	0.284	C108	C110			
R40	PVGR	0.75	0.142	C85				
R41	PVGR	0.75	0.142	C86				
R42	PVGR	2	0.923	C87	C88	C89	C91	
R43	PVGR	1.5	0.598	C89	C115			
R44	PVGR	0.75	0.142	C87				
R45	PVGR	1.25	0.284	C88	C91			
R46	PVGR	0.75	0.142	C91				
R47	PVGR	0.75	0.142	C88				
R48	GRS	4	4.192	C64	C67	C68	C72	C89
				C90	C91	C92	C93	C95
				C98	C103	C106	C113	C115
R49	PVGR	1	0.222	C96	C101			
R50	PVGR	1	0.222	C107	C111			

RCWY NUMBER	TYPE	SIZE	AREA (SQ IN)	CIRCUIT ASSIGNMENTS				
				1	2	3	4	5
R51	GRS	2.5	1.901	C94	C95	C96	C97	C99
				C100	C101	C102	C103	C104
				C117	C121			
R52	GRS	2.5	1.901	C105	C106	C107	C108	C109
				C110	C111	C112	C113	C114
				C118	C122			
R53	PVGR	1.25	0.284	C97	C100			
R54	GRS	1.25	0.477	C99	C109	C213		
R55	PVGR	0.75	0.193	C131				
R56	PVGR	1.25	0.284	C168	C170			
R57	PVGR	1	0.222	C167	C171			
R58	PVGR	0.75	0.193	C134				
R59	PVGR	0.75	0.142	C195				
R60	PVGR	0.75	0.193	C137				
R61	PVGR	0.75	0.142	C197				
R62	PVGR	1.25	0.284	C178	C180			
R63	PVGR	0.75	0.193	C140				
R64	PVGR	2	1.024	C143	C144	C145	C147	C185
R65	PVGR	1.5	0.598	C145	C185			
R66	PVGR	0.75	0.142	C143				
R67	PVGR	1.25	0.284	C144	C147			
R68	PVGR	0.75	0.142	C144				
R69	PVGR	0.75	0.142	C147				
R70	PVGR	0.75	0.142	C141				
R71	PVGR	0.75	0.142	C142				
R72	PVGR	0.75	0.142	C160				
R73	PVGR	0.75	0.142	C161				
R74	PVGR	1.25	0.426	C160	C161	C162		
R75	PVGR	0.75	0.142	C162				
R76	PVGR	0.75	0.193	C150				
R77	PVGR	0.75	0.142	C156				
R78	PVGR	0.75	0.142	C163				
R79	GRS	3	2.195	C165	C175	C176	C177	C178
				C179	C180	C181	C182	C183
				C184	C188	C193		
R80	GRS	2.5	1.607	C166	C167	C168	C169	C170
				C171	C172	C173	C174	C187
				C192				
R81	GRS	4	3.684	C148	C158	C166	C173	C176
				C182	C183	C185	C186	C187
				C188	C189	C190	C191	C192
				C193	C194	C195	C212	C217
R82	GRS	1.5	0.619	C169	C179	C196		
R83	PVGR	1	0.222	C177	C181			
R84	GRS	1.25	0.462	C172	C174	C184	C186	C189
				C221	C222	C223		
R85	GRS	1	0.320	C172	C174	C184	C186	C221
				C222	C223			
R86	PVGR	1.25	0.386	C151	C152			
R87	PVGR	1.5	0.487	C64	C67			
R88	PVGR	2	1.167	C64	C67	C72	C151	C152
R89	PVGR	2	1.167	C64	C67	C68	C72	C151
R90	PVGR	1.25	0.386	C68	C152			
R91	PVGR	1.5	0.487	C68	C72			
R92	PVGR	0.75	0.193	C152				
R93	PVGR	2	1.167	C64	C67	C68	C72	C151
R94	PVGR	0.75	0.142	C127				
R95	PVGR	0.75	0.193	C159				
R96	PVGR	0.75	0.193	C158				
R97	PVGR	1.25	0.386	C158	C159			
R98	PVGR	0.75	0.193	C158				
R99	PVGR	0.75	0.142	C148				
R100	GRS	0.75	0.064	C198				
R101	GRS	0.75	0.160	C198	C205	C206	C207	
R102	GRS	0.75	0.142	C211				
R103	GRS	0.75	0.096	C199	C200	C201		
R104	GRS	0.75	0.032	C200				
R105	GRS	0.75	0.142	C203				
R106	GRS	1	0.174	C200	C203			
R107	GRS	0.75	0.032	C201				
R108	GRS	1.25	0.426	C202	C203	C204		
R109	GRS	0.75	0.142	C202				
R110	GRS	0.75	0.142	C204				
R111	GRS	0.75	0.032	C207				
R112	GRS	0.75	0.142	C210				
R113	GRS	1	0.174	C207	C210			
R114	GRS	0.75	0.032	C206				
R115	GRS	0.75	0.142	C209				
R116	GRS	1.25	0.568	C208	C209	C210	C211	
R117	GRS	0.75	0.032	C205				
R118	GRS	0.75	0.142	C208				

RCWY NUMBER	TYPE	SIZE	AREA (SQ IN)	CIRCUIT ASSIGNMENTS				
				1	2	3	4	5
R119A	GRS	3	2.650	P4A				
R119B	GRS	3	2.650	P4B				
R120A	GRS	3	2.650	P2A				
R120B	GRS	3	2.650	P2B				
R121A	PVGR	4	2.650	P2A				
R121B	PVGR	4	2.650	P2B				
R122A	GRS	3	2.650	P4A				
R122B	GRS	3	2.650	P4B				
R123	GRS	4	3.003	C80	C81	C82	C87	C88
				C121	C122	C123	C126	C127
				C128	C150	C151	C153	C157
				C164	C194	C212	C217	C218
				C219	C220	C224	C225	
R124	GRS	3	2.650	P5				
R125	GRS	3	2.650	P5				
R126	GRS	3	2.650	P5				
R127	GRS	1.25	0.529	P6				
R128	GRS	3	2.054	C53	C54	C56	C57	C58
				C59	C146	C221	C222	C223
				C226	C227			
R129	GRS	2	1.480	P18				
R130	GRS	2	1.480	P19				
R131	GRS	2	1.480	P22				
R132	GRS	2	1.480	P23				
R133	GRS	3	2.315	P19	P20	P21		
R134	GRS	3	2.315	P23	P24	P25		
R135	GRS	3	2.583	P6	P7	P8	P9	P10
				P11	P58	P59		
R136	GRS	2.5	1.801	P12	P13	P14	P15	P16
				P17	P65			
R137	GRS	3	2.539	P7	P50	P52	P56	P62
				P65				
R138	GRS	3	2.650	P5				
R139	GRS	2.5	1.818	C61	C116	C117	C118	C119
				C120	C149			
R140	GRS	0.75	0.193	C213				
R141	PVGR	0.75	0.212	P14				
R142	PVGR	2	0.835	P20	P21			
R143	PVGR	0.75	0.212	P16				
R144	PVGR	2	0.835	P24	P25			
R145	PVGR	0.75	0.212	P15				
R146	PVGR	2.5	1.240	P26				
R147	PVGR	0.75	0.212	P17				
R148	PVGR	0.75	0.212	P27				
R149	PVGR	0.75	0.268	P28				
R150	PVGR	1.25	0.424	P12	P13			
R151	PVGR	1.25	0.424	P12	P13			
R152	PVGR	0.75	0.212	P12				
R153	PVGR	0.75	0.212	P13				
R154	PVGR	0.75	0.212	P11				
R155	PVGR	0.75	0.212	P10				
R156	GRS	2.5	1.377	P29	P31	P32	P33	P34
R157	GRS	2.5	1.377	P35	P36	P37	P38	P60
				P61	P66			
R158	GRS	3	2.315	P40	P41	P42		
R159	GRS	3	2.315	P44	P45	P46		
R160	GRS	2	0.981	P30				
R161	GRS	2.5	1.333	P51	P54	P57	P63	P66
R162	GRS	2	1.480	P43				
R163	GRS	2	1.480	P44				
R164	GRS	2	1.480	P39				
R165	GRS	2	1.480	P40				
R166	GRS	1.25	0.529	P29				
R167	GRS	2	0.981	P30				
R168	GRS	0.75	0.212	P34				
R169	PVGR	0.75	0.212	P35				
R170	PVGR	2	0.835	P41	P42			
R171	PVGR	0.75	0.212	P37				
R172	PVGR	2.5	1.240	P47				
R173	PVGR	0.75	0.212	P36				
R174	PVGR	2	0.835	P45	P46			
R175	PVGR	0.75	0.212	P38				
R176	PVGR	0.75	0.268	P49				
R177	PVGR	0.75	0.212	P48				
R178	PVGR	0.75	0.212	P33				
R179	PVGR	1.25	0.424	P8	P9			
R180	PVGR	0.75	0.212	P8				
R181	PVGR	0.75	0.212	P9				
R182	PVGR	1.25	0.424	P31	P32			
R183	PVGR	0.75	0.212	P32				
R184	PVGR	0.75	0.212	P31				
R185	GRS	4	2.960	P18	P22			

LEGEND

GRS –DENOTES GALVANIZED RIGID STEEL

PVGR –DENOTES PVC COATED RIGID STEEL

SL –DENOTES STEEL LADDER CABLE TRAY

SB –DENOTES STEEL SOLID BOTTOM CABLE TRAY WITH FLAT COVER.

FRE –DENOTES FIBERGLASS REINFORCED EPOXY CONDUIT WITHIN SUB–MARINE DUCT SYSTEM

CBL –DENOTES FLEXIBLE CABLE LOOP BETWEEN BASCULE PIER AND BASCULE SPAN

FIELD BOOK: _____
SURVEYED: _____
SURVEY BASE MAP: _____
DESIGN ENTERED: F. HAYWOOD 10/2009
DESIGNED G. PETERS 10/2009
CHECKED: R. STEEL 11/2009
SUPERVISOR: G. PETERS 01/2010

NUM.	REVISION	BY	DATE

JOHN G. SCHAILERT — STATE OF WASHINGTON — 46094 — REGISTERED PROFESSIONAL ENGINEER

HNTB

FED. AID No. _____
PROJECT No. 300197
SURVEY No. 32-24-4-22
MAINTENANCE DIVISION No. 3

KING COUNTY DEPT. OF TRANSPORTATION
HAROLD TANIGUCHI, DIRECTOR

SOUTH PARK BRIDGE #3179 REPLACEMENT

RACEWAY SCHEDULE–1

King County

BE57

SHEET 662 OF 667 SHEETS

316-63 (___)

RCWY NUMBER	TYPE	SIZE	AREA (SQ IN)	CIRCUIT ASSIGNMENTS				
				1	2	3	4	5
R186	GRS	3	2.069	P26	P27	P28	P64	
R187	GRS	0.75	0.268	P50				
R188	GRS	4	2.960	P39	P43			
R189	GRS	2.5	1.720	P47	P48	P49		
R190	GRS	0.75	0.268	P51				
R191A	PVGR	3	2.650	P1A				
R191B	PVGR	3	2.650	P1B				
R192A	PVGR	2.5	1.635	P3A				
R192B	PVGR	2.5	1.635	P3B				
R193	PVGR	0.75	0.268	P52	C224			
R194	PVGR	0.75	0.268	P53				
R195	PVGR	0.75		FOR	HEAT	TRACE	USE	
R196	PVGR	0.75	0.268	P54	C226			
R197	PVGR	0.75	0.268	P55				
R198	PVGR	0.75		FOR	HEAT	TRACE	USE	
R199	GRS	0.75	0.032	C199				
R200	GRS	0.75	0.268	P56	C225			
R201	GRS	0.75	0.268	P57	C227			
R202	PVGR	3	2.585	C8	C10	C12	C14	C17
				C24	C25	C33	C36	C37
				C40	C172	C174		
R203	PVGR	3	2.721	C52	C57	C130	C133	C136
				C139	C146	C184	C186	
R204	PVGR	3	1.513	C157	C165	C175	C191	C194
				C198	C212	C217	C221	C222
				C223				
R205	PVGR	3	2.650	P5				
R206	PVGR	3	2.650	P5				
R207	PVGR	3	2.585	C8	C10	C12	C14	C17
				C24	C25	C33	C36	C37
				C40	C172	C174		
R208	PVGR	3	2.721	C52	C57	C130	C133	C136
				C139	C146	C184	C186	
R209	PVGR	3	1.513	C157	C165	C175	C191	C194
				C198	C212	C217	C221	C222
				C223				
R210	GRS	0.75	0.193	C214				
R211	GRS	0.75	0.193	C215				
R212	GRS	0.75	0.193	C216				
R213	PVGR	1	0.294	C219				
R214	PVGR	0.75	0.212	P58				
R215	PVGR	1	0.294	C220				
R216	PVGR	0.75	0.212	P59				
R217	PVGR	1	0.294	C223				
R218	PVGR	0.75	0.212	P61				
R219	PVGR	1	0.294	C220				
R220	PVGR	0.75	0.212	P60				
R221	PVGR	0.75	0.212	P62				
R222	PVGR	0.75	0.212	P63				
R223	PVGR	1	0.349	P64				
R224	PVGR	1.5	0.588	C228	C229			

RCWY NUMBER	TYPE	SIZE	AREA (SQ IN)	CIRCUIT ASSIGNMENTS				
				1	2	3	4	5
T1	SL	6x9	15.800	C1	C4	C6	C13	C15
				C18	C19	C20	C24	C25
				C30	C31	C36	C37	C42
				C47	C52	C57	C62	C63
				C65	C66	C70	C71	C74
				C77	C80	C83	C90	C92
				C93	C94	C98	C102	C104
				C105	C112	C114	C116	C120
				C126	C128	C130	C133	C136
				C139	C146	C149	C164	C165
				C172	C174	C175	C184	C186
				C191	C218	C221	C228	
T2	SL	7x18	51.501	C1	C2	C3	C4	C5
				C6	C7	C8	C9	C10
				C11	C12	C13	C14	C15
				C16	C17	C18	C19	C20
				C21	C22	C23	C24	C25
				C29	C30	C31	C32	C33
				C34	C36	C37	C41	C42
				C43	C44	C45	C46	C47
				C48	C50	C52	C57	C62
				C63	C64	C65	C66	C67
				C68	C69	C70	C71	C72
				C73	C74	C75	C76	C77
				C78	C79	C80	C81	C82
				C83	C84	C85	C86	C87
				C88	C89	C90	C91	C92
				C93	C94	C95	C96	C97
				C98	C99	C100	C101	C102
				C103	C104	C105	C106	C107
				C108	C109	C110	C111	C112
				C113	C114	C115	C116	C117
				C118	C119	C120	C121	C122
				C123	C124	C125	C126	C127
				C128	C130	C133	C136	C139
				C146	C149	C150	C151	C153
				C157	C164	C165	C172	C174
				C175	C184	C186	C194	C198
				C205	C206	C207	C212	C213
				P16	P17	P18	P19	P20
				P21	P22	P23	P24	P25
				P26	P27	P28	P50	P52
				P56	P58	P59	C217	C218
				C220	C221	C222	C223	C224
				C225	P62	P64	C228	C229
T3	SL	6x18	40.210	C5	C7	C8	C9	C10
				C11	C12	C14	C16	C17
				C22	C23	C24	C25	C32
				C33	C34	C36	C37	C40
				C43	C44	C45	C48	C49
				C50	C52	C57	C64	C67
				C68	C72	C75	C78	C81
				C84	C85	C86	C87	C88
				C89	C91	C96	C97	C100
				C101	C107	C108	C110	C111
				C115	C207	C208	C210	C212
				C123	C125	C127	C130	C133
				C136	C139	C146	C151	C153
				C157	C165	C172	C174	C175
				C184	C186	C194	C198	C205
				P2A	P2B	P4A	P4B	P5
				P6	P8	P9	P10	P11
				P12	P13	P14	P15	P16
				P17	P18	P19	P20	P21
				P22	P23	P24	P25	P26
				P27	P28	P50	P52	P56
				P58	P59	C217	C219	C220
				C221	C222	C223	C224	C225
				P62	P64	C228	C229	
T4	SB	4x12	9.879	C5	C48	C50	C64	C67
				C68	C72	C75	C78	C81
				C84	C85	C86	C87	C88
				C89	C91	C96	C97	C100
				C101	C107	C108	C110	C111
				C115	C123	C125	C127	C151
				C153	C205	C207	C208	C210
				P11	P12	P13	P14	P15
				P16	P17	P20	P24	P25
				P26	P58	P59	C219	C220
				P62				
T5	SB	6x12		SEE	NOTE	1		

RCWY NUMBER	TYPE	SIZE	AREA (SQ IN)	CIRCUIT ASSIGNMENTS				
				1	2	3	4	5
T6	SL	7x18	33.140	C14	C24	C25	C26	C27
				C28	C35	C36	C37	C38
				C39	C40	C51	C52	C53
				C54	C55	C56	C57	C58
				C59	C60	C61	C129	C130
				C131	C132	C133	C134	C135
				C136	C137	C138	C139	C140
				C141	C142	C143	C144	C145
				C146	C147	C148	C157	C158
				C160	C165	C166	C167	C168
				C169	C170	C171	C172	C173
				C174	C175	C197	C201	C202
				C203	C204	C176	C177	C178
				C179	C180	C181	C182	C183
				C184	C185	C186	C187	C188
				C189	C190	C191	C192	C193
				C194	C195	C196	C197	C201
				C202	C203	C204	C212	C215
				P5	P29	P30	P31	P32
				P33	P34	P35	P36	P37
				P38	P39	P40	P41	P42
				P43	P44	P45	P46	P47
				P48	P49	P51	P54	P57
				P60	P61	C217	C221	C222
				C223	C226	C227	P63	
T7	SL	6x18	28.780	C8	C10	C12	C14	C17
				C24	C25	C27	C28	C33
				C36	C37	C38	C39	C40
				C52	C53	C54	C55	C57
				C58	C59	C60	C130	C131
				C133	C134	C136	C137	C139
				C140	C141	C142	C143	C144
				C145	C146	C147	C148	C157
				C158	C160	C165	C167	C168
				C170	C171	C172	C174	C175
				C212	C177	C178	C180	C181
				C184	C185	C186	C191	C194
				C195	C197	C199	C200	C201
				C203	C204	P5	P29	P30
				P31	P32	P33	P34	P35
				P36	P37	P38	P39	P40
				P41	P42	P43	P44	P45
				P46	P47	P48	P49	P51
				P54	P57	P60	P61	C217
				C221	C222	C223	C226	C227
				P63				
T8	SB	4x12	9.140	C54	C58	C60	C131	C134
				C137	C140	C141	C142	C143
				C144	C145	C146	C147	C148
				C158	C160	C167	C168	C170
				C171	C177	C178	C180	C181
				C185	C195	C197	C199	C200
				C203	C204	P33	P35	P36
				P37	P38	P41	P42	P45
				P46	P47	P60	P61	C222
				P63				
T9	SB	6x12		SEE	NOTE	1		
NFLX	CBL			C64	C67	C68	C72	C151
				P12	P13			
SFLX	CBL			C158				
DUC1	FRE	4	2.585	C8	C10	C12	C14	C17
				C24	C25	C33	C36	C37
				C40	C172	C174		
DUC2	FRE	4	2.721	C52	C57	C130	C133	C136
				C139	C146	C184	C186	
DUC3	FRE	4	1.433	C157	C165	C175	C191	C194
				C198	C212	C217	C221	C222
				C223				
DUC4	FRE	4	2.650	P5				

LEGEND

GRS –DENOTES GALVANIZED RIGID STEEL

PVGR –DENOTES PVC COATED RIGID STEEL

SL –DENOTES STEEL LADDER CABLE TRAY

SB –DENOTES STEEL SOLID BOTTOM CABLE TRAY WITH FLAT COVER.

FRE –DENOTES FIBERGLASS REINFORCED EPOXY CONDUIT WITHIN SUB–MARINE DUCT SYSTEM

CBL –DENOTES FLEXIBLE CABLE LOOP BETWEEN BASCULE PIER AND BASCULE SPAN

NOTES:

1. CABLE TRAYS T5 AND T9 ARE RACEWAYS DEDICATED TO USE FOR CROSS CHANNEL CABLES BETWEEN THE NORTH AND SOUTH PIER. SEE SHTS BE59 AND BE60 FOR FURTHER DETAILS.

FIELD BOOK:			
SURVEYED:			
SURVEY BASE MAP:			
DESIGN ENTERED:	F. HAYWOOD	10/2009	
DESIGNED	G. PETERS	10/2009	
CHECKED:	R. STEEL	11/2009	
SUPERVISOR:	G. PETERS	01/2010	

NUM.	REVISION	BY	DATE

JOHN G. SCHAILERT · STATE OF WASHINGTON · 45694 · REGISTERED PROFESSIONAL ENGINEER

HNTB

FED. AID No.

PROJECT No. 300197

SURVEY No. 32-24-4-22

MAINTENANCE DIVISION No. 3

KING COUNTY DEPT. OF TRANSPORTATION

HAROLD TANIGUCHI, DIRECTOR

SOUTH PARK BRIDGE #3179 REPLACEMENT

RACEWAY SCHEDULE–2

King County

BE58

SHEET 663 OF 667 SHEETS

316-63 (___)

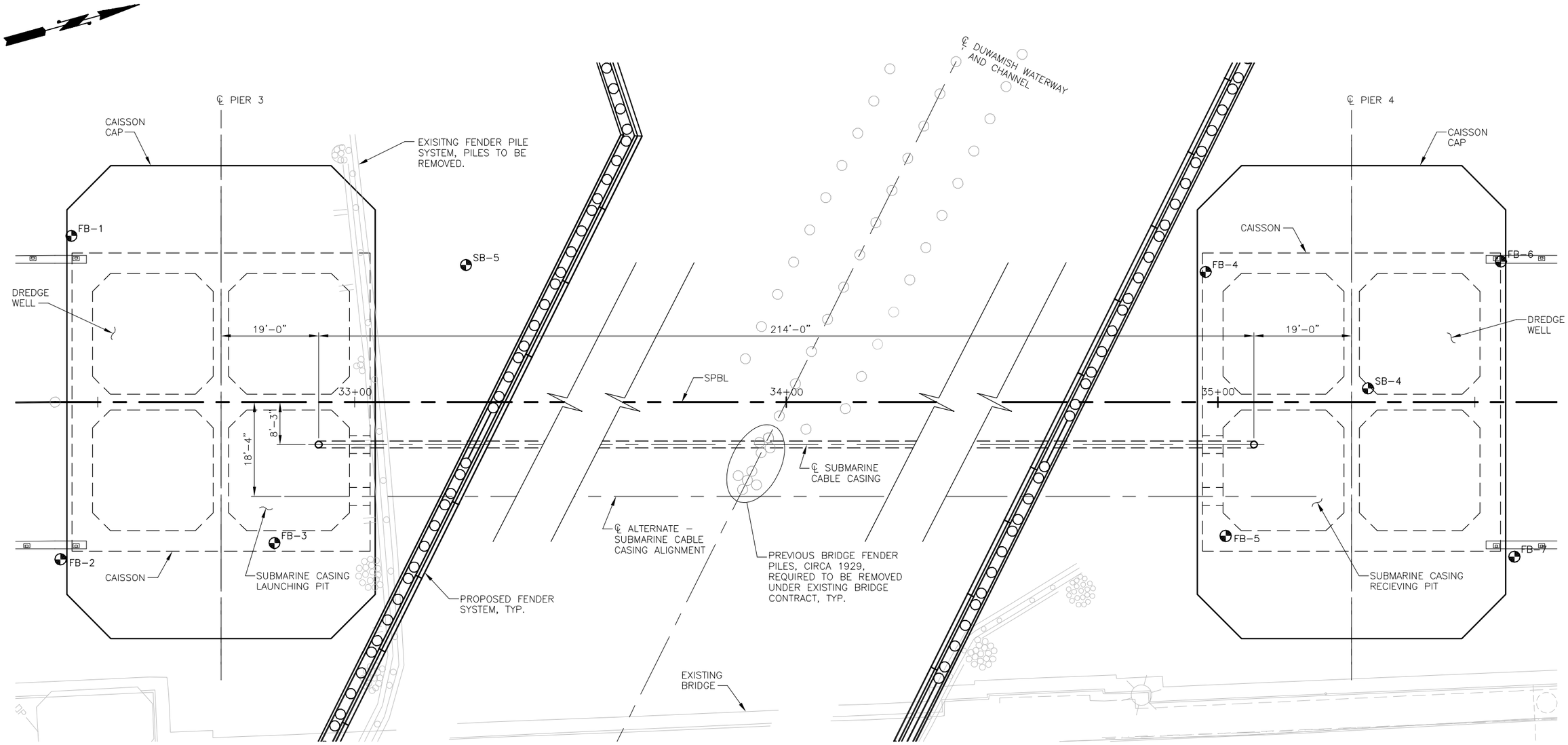

SUBMARINE CONDUIT PLAN

10 5 0 10 20
SCALE IN FEET

NOTES:

1. SEE SHEET BE60 FOR ADDITIONAL INFORMATION.
2. PROJECT RECORDS RELATED TO THE PREVIOUS FENDER SYSTEM PILES INDICATE THE FENDER SYSTEM PILES WERE DRIVEN TO AN ELEVATION OF –31.0 FEET.
3. CONTRACT REQUIREMENTS FOR REMOVAL OF THE PREVIOUS FENDER SYSTEM PILES REQUIRED THE PILES TO BE REMOVED RATHER THAN BROKEN OFF AT THE MUD LINE.
4. CHANNEL DREDGING RECORDS SUBSEQUENT TO REMOVAL OF THE PREVIOUS FENDER SYSTEM PILES INDICATE THE PREVIOUS FENDER PILES WERE REMOVED.

CALL 2 WORKING DAYS BEFORE YOU DIG
1–800–424–5555
(UNDERGROUND UTILITY LOCATIONS ARE APPROX.)

FIELD BOOK:			
SURVEYED:			
SURVEY BASE MAP:			
DESIGN ENTERED:	T. TUTTLE	12/2009	
DESIGNED	T. TUTTLE	12/2009	
CHECKED:	F. VESCI	12/2009	
SUPERVISOR:	R. JOHNSON	01/2010	

NUM.	REVISION	BY	DATE

RICHARD M. JOHNSON — STATE OF WASHINGTON — 43017 — REGISTERED PROFESSIONAL ENGINEER

HNTB

FED. AID No.

PROJECT No. 300197

SURVEY No. 32–24–4–22

MAINTENANCE DIVISION No. 3

KING COUNTY DEPT. OF TRANSPORTATION
HAROLD TANIGUCHI, DIRECTOR

SOUTH PARK BRIDGE #3179 REPLACEMENT

SUBMARINE CONDUIT LAYOUT – 1

King County

BE59

SHEET 664 OF 667 SHEETS

316-63 (___)

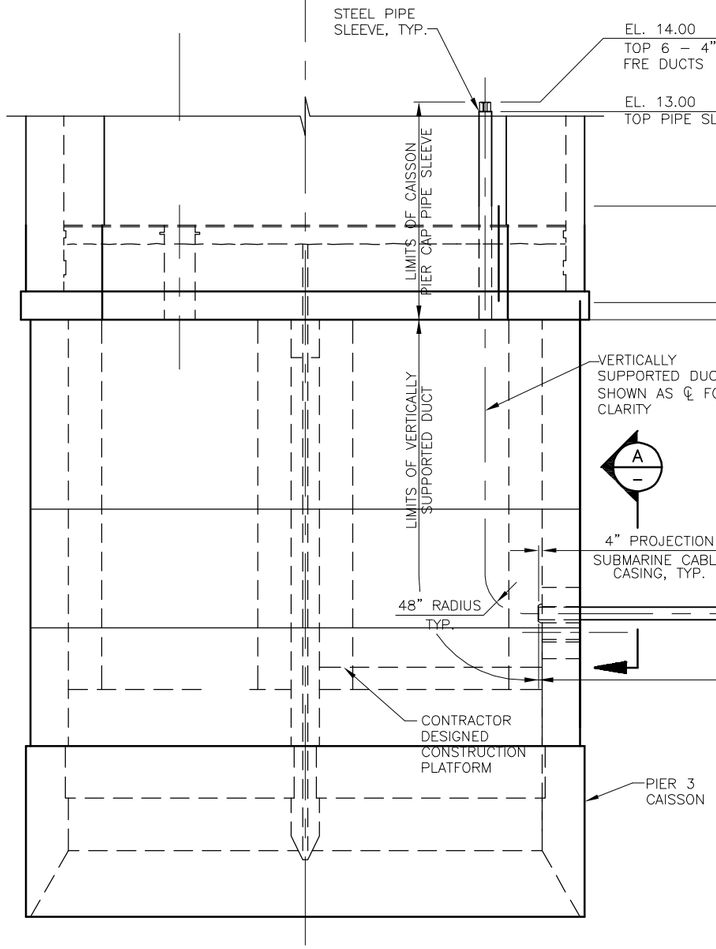

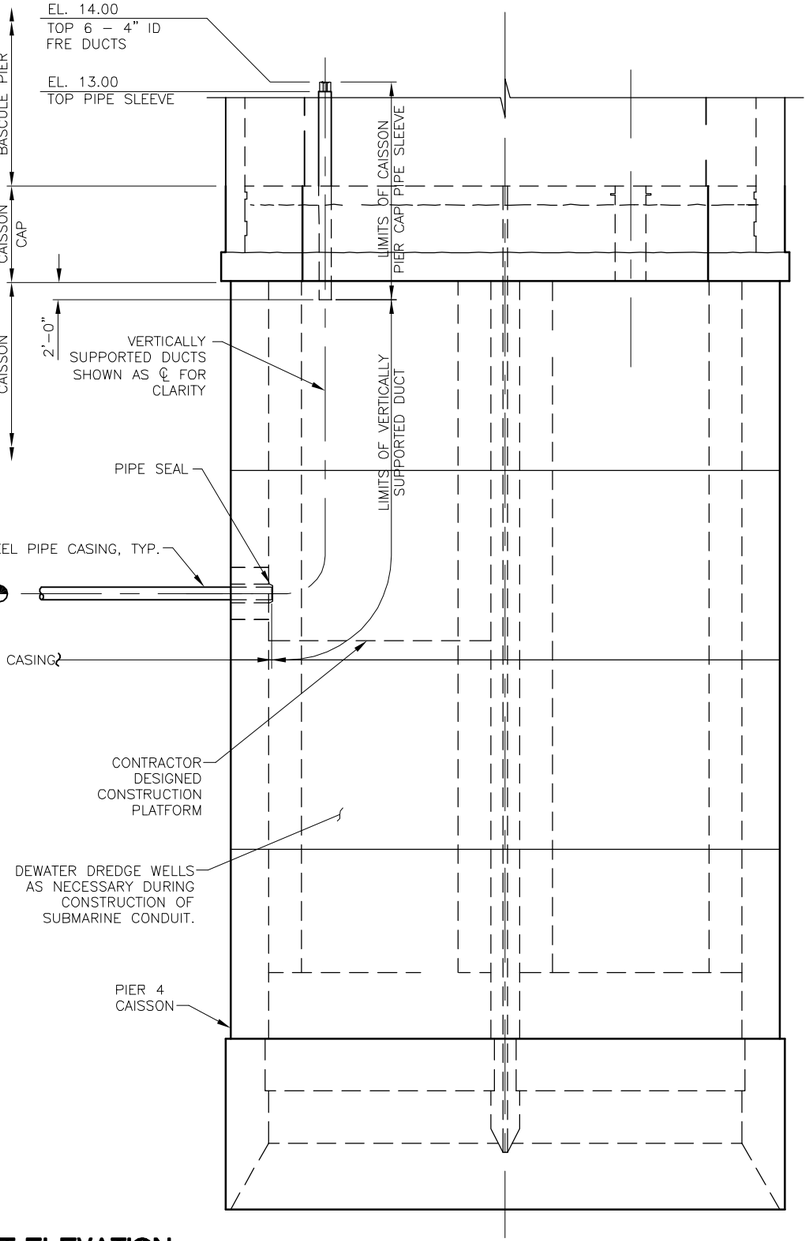

SUBMARINE CONDUIT ELEVATION

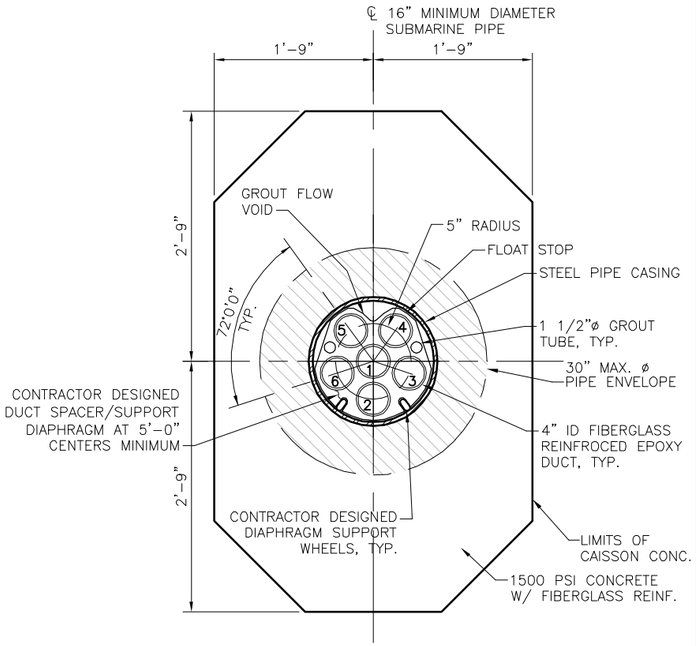

SUBMARINE CASING SECTION A

DUCT	USAGE
1	1 – 60 C, #12, 2 – 2C #16 INST.
2	1 – 60 C, #12, 2 – 2C #16 INST.
3	1–60C, #12,1 – BELDEN #B9B202 FIBER OPTIC CABLE, 1 GAL–TRONICS 6C INTERCOM CABLE, BELDEN #YR29281
4	5 – 350 MCM
5	VACANT FOR CITY OF SEATTLE USE
6	VACANT FOR KING COUNTY USE

NOTES:

1. SEE SHEETS SB01 THROUGH SB05 FOR SOIL BORINGS.
2. SEE SHEET BE59 FOR ADDITIONAL INFORMATION.

8 4 0 4 8 16
SCALE IN FEET

CALL 2 WORKING DAYS BEFORE YOU DIG
1–800–424–5555
(UNDERGROUND UTILITY LOCATIONS ARE APPROX.)

FIELD BOOK:					
SURVEYED:					
SURVEY BASE MAP:					
DESIGN ENTERED:	T. TUTTLE	12/2009			
DESIGNED	T. TUTTLE	12/2009			
CHECKED:	F. VESCI	12/2009			
SUPERVISOR:	R. JOHNSON	01/2010	NUM.	REVISION	BY / DATE

RICHARD M. JOHNSON — STATE OF WASHINGTON — 43017 — REGISTERED PROFESSIONAL ENGINEER

HNTB

FED. AID No.
PROJECT No. 300197
SURVEY No. 32–24–4–22
MAINTENANCE DIVISION No. 3

KING COUNTY DEPT. OF TRANSPORTATION
HAROLD TANIGUCHI, DIRECTOR
SOUTH PARK BRIDGE #3179 REPLACEMENT
SUBMARINE CONDUIT LAYOUT – 2

King County

BE60
SHEET 665 OF 667 SHEETS
316-63 (___)

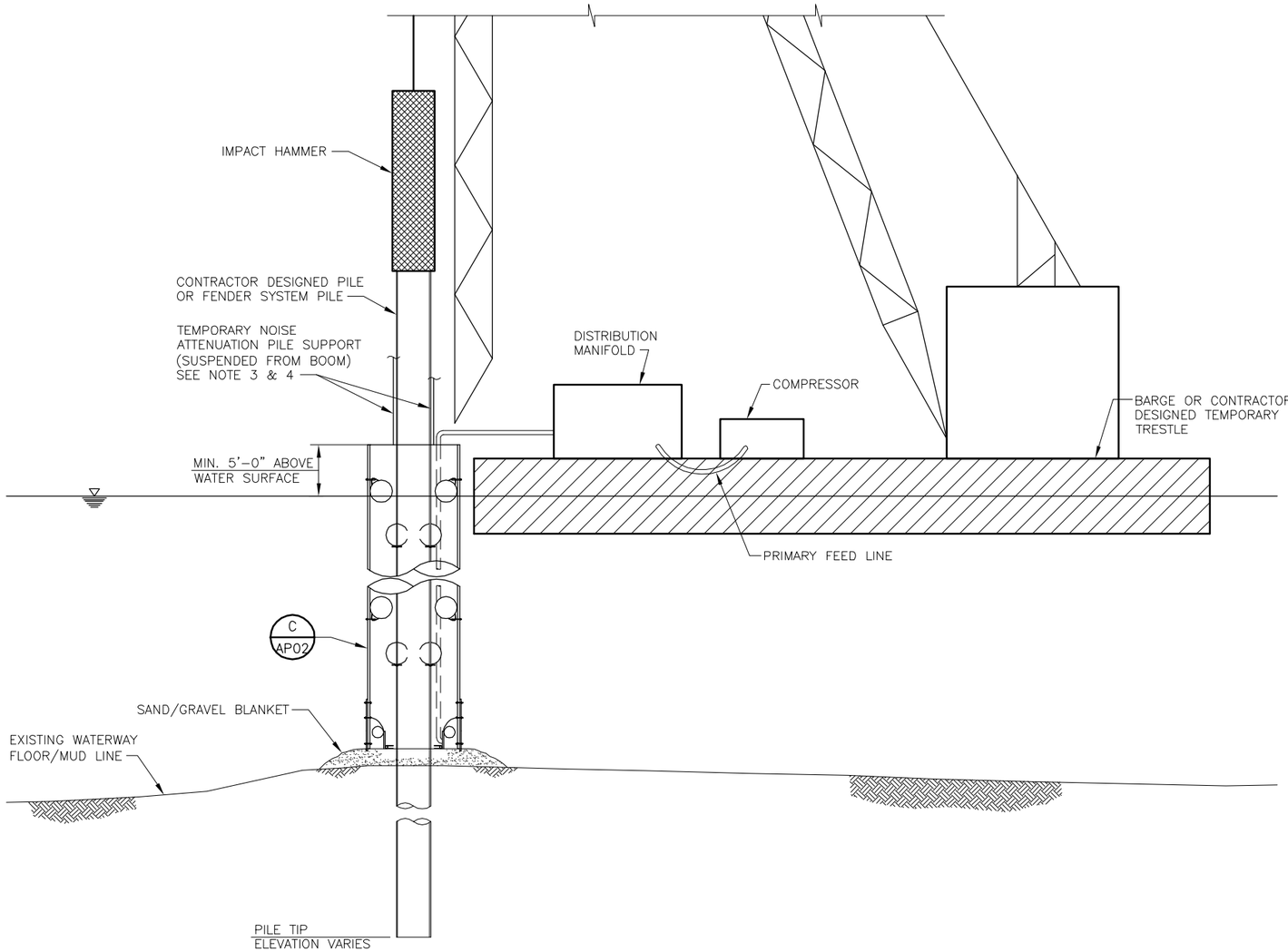

ELEVATION

TEMPORARY NOISE ATTENUATION PILE ARRANGEMENT (A / AP01)

NTS

NOTES:

1. THE CONTRACTOR SHALL PROVIDE TEMPORARY NOISE ATTENUATION PILES (TNAP) IN THE FORM OF A CONFINED BUBBLE CURTAIN AS REPRESENTED ON THE "AP" SHEETS.
2. THE GRAPHIC REPRESENTATIONS OF THE TNAP WITHIN THE "AP" SHEETS ARE CONCEPTUAL IN NATURE. THE CONTRACTOR SHALL DESIGN AND PROVIDE THE TNAP AND ASSOCIATED EQUIPMENT AND HARDWARE. THE CONTRACTOR SHALL NOT FABRICATE THE TNAP UNTIL THE DESIGN HAS BEEN APPROVED BY THE ENGINEER.
3. THE CONTRACTOR SHALL DEVELOP MEANS AND METHODS OF TNAP PLACEMENT, SUPPORT AND REMOVAL.
4. THE CONTRACTOR SHALL DESIGN AND PROVIDE BALLAST OR OTHER MEANS TO COUNTER THE BUOYANCY EFFECTS OF THE BUBBLES.
5. PLACE SAND TURBIDITY CONTROL BLANKET PRIOR TO PLACEMENT OF THE TNAP ON THE WATERWAY FLOOR.
6. THE CONTRACTOR SHALL UTILIZE A TNAP AT ALL TIMES WHILE DRIVING STEEL PIPE PILE OR TIMBER PILES BY IMPACT.
7. USE OF A TNAP WILL NOT BE REQUIRED WHILE DRIVING OR EXTRACTING PILES WITH A VIBRATORY HAMMER.
8. EXISTING/PROPOSED STRUCTURES ARE NOT SHOWN FOR CLARITY.
9. A BUBBLE RING MANIFOLD SHALL BE PROVIDED AS SHOWN.
10. THE BUBBLE RING MANIFOLD SHALL BE OPERATED AT A MINIMUM OF 32.91 SCFM AT 90 PSI FOR EACH FOOT IN LENGTH OF THE MANIFOLD. THIS EQUATES TO A MINIMUM OF 326 SCFM AT 90 PSI FOR THE BUBBLE MANIFOLD WITH AN OUTSIDE DIAMETER OF 38".
11. THE CONTRACTOR SHALL PROVIDE A PRESSURE REGULATOR AND PRESSURE METER ON THE AIR SUPPLY LINE TO THE MANIFOLD.
12. THE CONTRACTOR SHALL PROVIDE A FLOW METER IN THE MAIN LINE AT THE COMPRESSOR AND AT THE AERATION PIPELINE AT THE INLET. IN APPLICATIONS WHERE THE FEED LINE FROM THE COMPRESSOR IS CONTINUOUS FROM THE COMPRESSOR TO THE AERATION PIPE INLET THE FLOW METER AT THE COMPRESSOR MAY BE ELIMINATED.
13. FLOW METERS SHALL BE INSTALLED ACCORDING TO THE MANUFACTURER'S RECOMMENDATIONS BASED ON EITHER LAMINAR FLOW OR NON-LAMINAR FLOW.
14. WELDS UNDER PRESSURE SHALL BE IN ACCORDANCE WITH ASTM SECTION 8 BOILER AND PRESSURE VESSEL CODE, LATEST EDITION.
15. THE BUBBLE RING MANIFOLD SHALL CONSIST OF A 2 1/2 INCH DIA. SCH. 80 6061-T6 ALUMINUM PIPE (2 7/8 INCH OD) WITH 4 ROWS OF 1/16 INCH DIA. HOLES STAGGERED AT 3/4 INCH CENTERS.
16. ALL WORK ASSOCIATED WITH THE TNAP SHALL BE INCLUDED IN THE PRICE BID FOR "WORK ACCESS – TEMPORARY TRESTLE"
17. SEE SHEET AP02, "EC" SHEETS AND "BG" SHEETS FOR ADDITIONAL INFORMATION.
18. THE SAND BLANKET SHALL BE A MINIMUM OF 6 INCHES IN DEPTH AND EXTEND 3 FEET BEYOND THE FOOT PRINT OF THE TNAP.

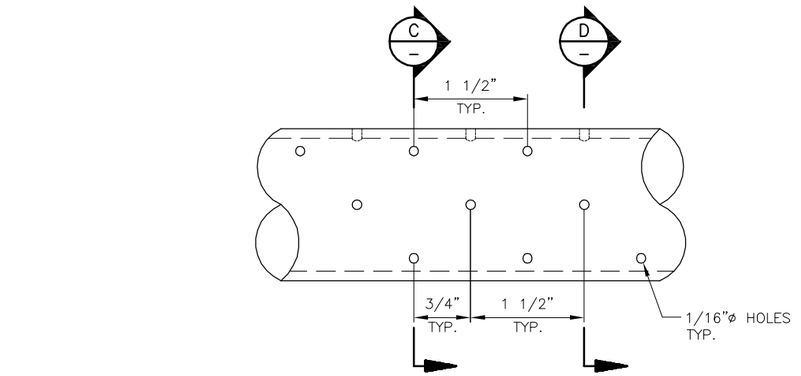

BUBBLE MANIFOLD

DETAIL (B / AP02)

NTS

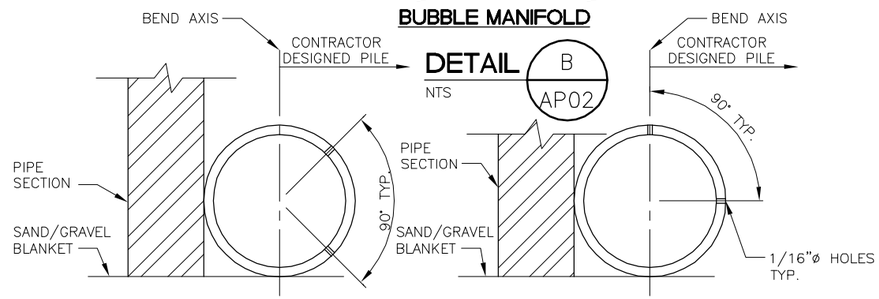

BUBBLE MANIFOLD

SECTION (C / –)

NTS

BUBBLE MANIFOLD

SECTION (D / –)

NTS

FIELD BOOK:						FED. AID No.	
SURVEYED:							
SURVEY BASE MAP:						PROJECT No. 300197	
DESIGN ENTERED: D. NORMAN	10/2009					SURVEY No. 32-24-4-22	
DESIGNED J. HAGENSEN	10/2009						
CHECKED: R.M. JOHNSON	10/2009					MAINTENANCE DIVISION No. 3	
SUPERVISOR: R.M. JOHNSON	01/2010	NUM.	REVISION	BY	DATE		

RICHARD M. JOHNSON — STATE OF WASHINGTON — 43007 — REGISTERED PROFESSIONAL ENGINEER

HNTB

KING COUNTY DEPT. OF TRANSPORTATION
HAROLD TANIGUCHI, DIRECTOR

SOUTH PARK BRIDGE #3179 REPLACEMENT

TEMPORARY NOISE ATTENUATION PILE (TNAP)

King County

AP01

SHEET 666 OF 667 SHEETS

316-63 (___)

NOTE:

1. BOAT FENDER RADIUS TO CREATE A PILE CLEARANCE OF 3" ±.
2. NUMBER OF SETS OF BOAT FENDERS VARIES AS WATER DEPTH CHANGES.
3. PIPE LENGTH VARIES AS WATER DEPTH CHANGES.
4. AS PIPE LENGTH INCREASES, NUMBER OF BOAT FENDERS INCREASE.

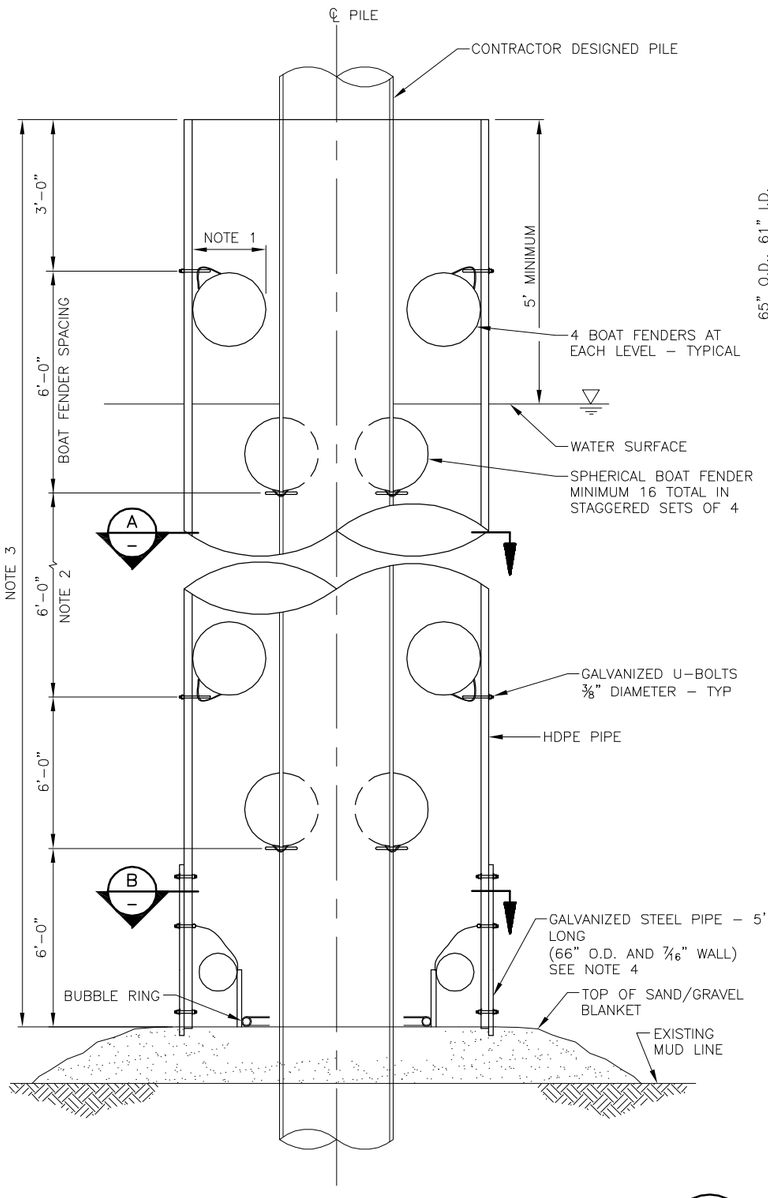

SECTION - TEMPORARY NOISE ATTENUATION PILE

(SECTION TAKEN AT CENTERLINE OF ATTENUATION PILE)
NTS

C / AP01

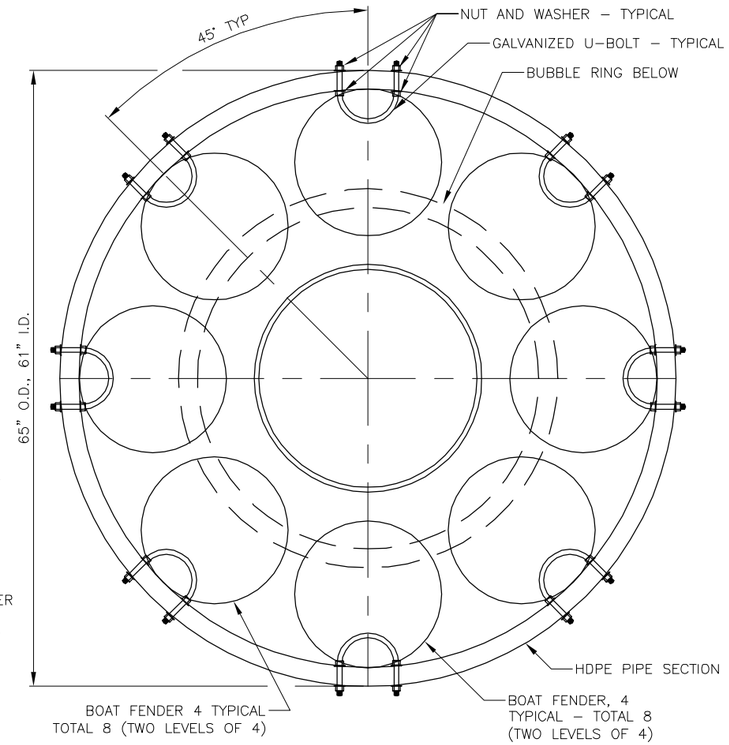

SECTION A

NTS

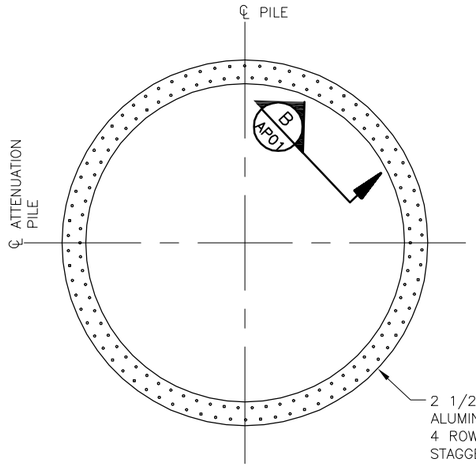

PLAN - BUBBLE RING MANIFOLD

NTS

D / AP01

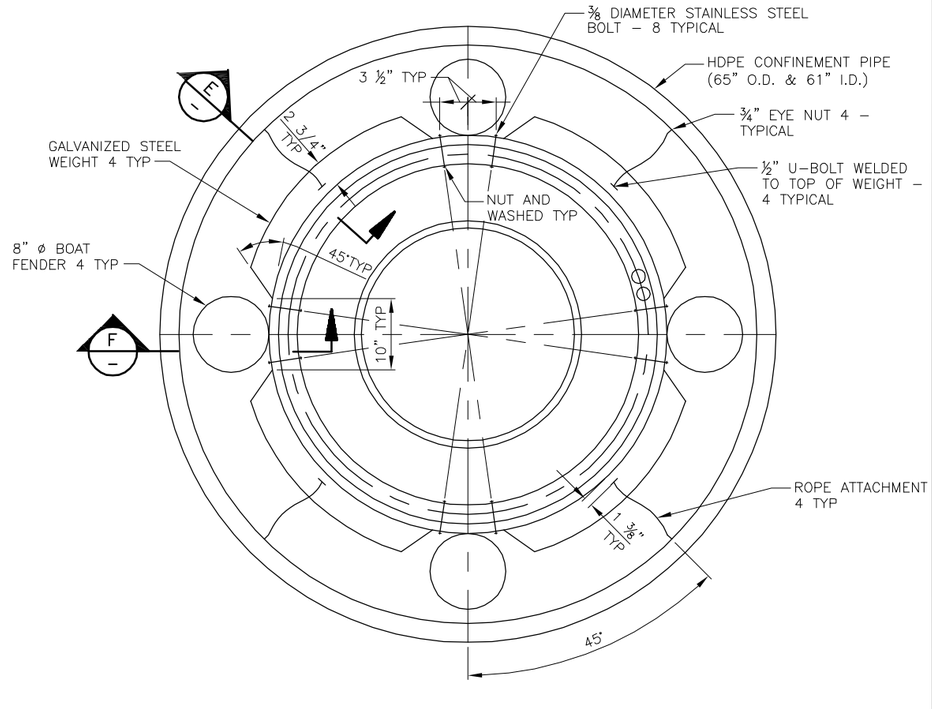

SECTION B

NTS

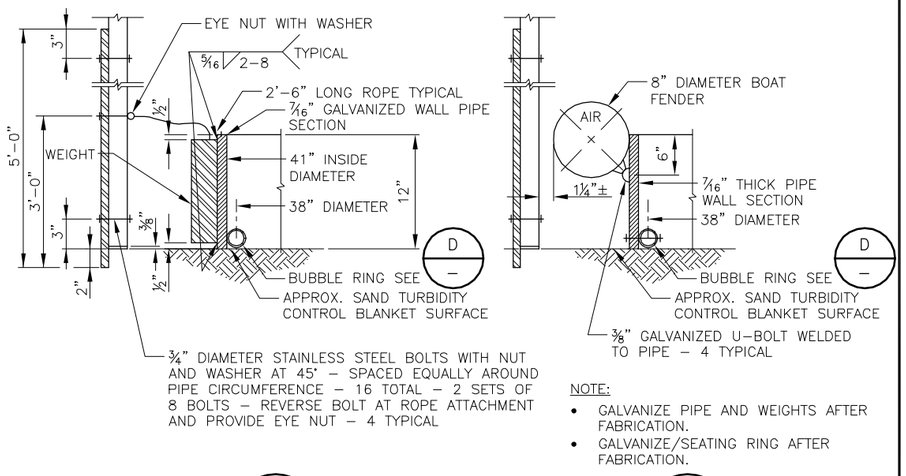

NOTE:

- GALVANIZE PIPE AND WEIGHTS AFTER FABRICATION.
- GALVANIZE/SEATING RING AFTER FABRICATION.

SECTION E

NTS

SECTION F

NTS

FIELD BOOK:					
SURVEYED:					
SURVEY BASE MAP:					
DESIGN ENTERED:	D. NORMAN	10/2009			
DESIGNED	J. HAGENSEN	10/2009			
CHECKED:	R.M. JOHNSON	10/2009			
SUPERVISOR:	R.M. JOHNSON	01/2010	NUM.	REVISION	BY / DATE

RICHARD M. JOHNSON – STATE OF WASHINGTON – 43017 – REGISTERED PROFESSIONAL ENGINEER

HNTB

FED. AID No. ____

PROJECT No. 300197

SURVEY No. 32-24-4-22

MAINTENANCE DIVISION No. 3

KING COUNTY DEPT. OF TRANSPORTATION
HAROLD TANIGUCHI, DIRECTOR

SOUTH PARK BRIDGE #3179 REPLACEMENT

TEMPORARY NOISE ATTENUATION PILE (TNAP) DETAILS

King County

AP02

SHEET 667 OF 667 SHEETS

316-63 (___)