SEC. 32, T.24 N, R.4 E, W.M.

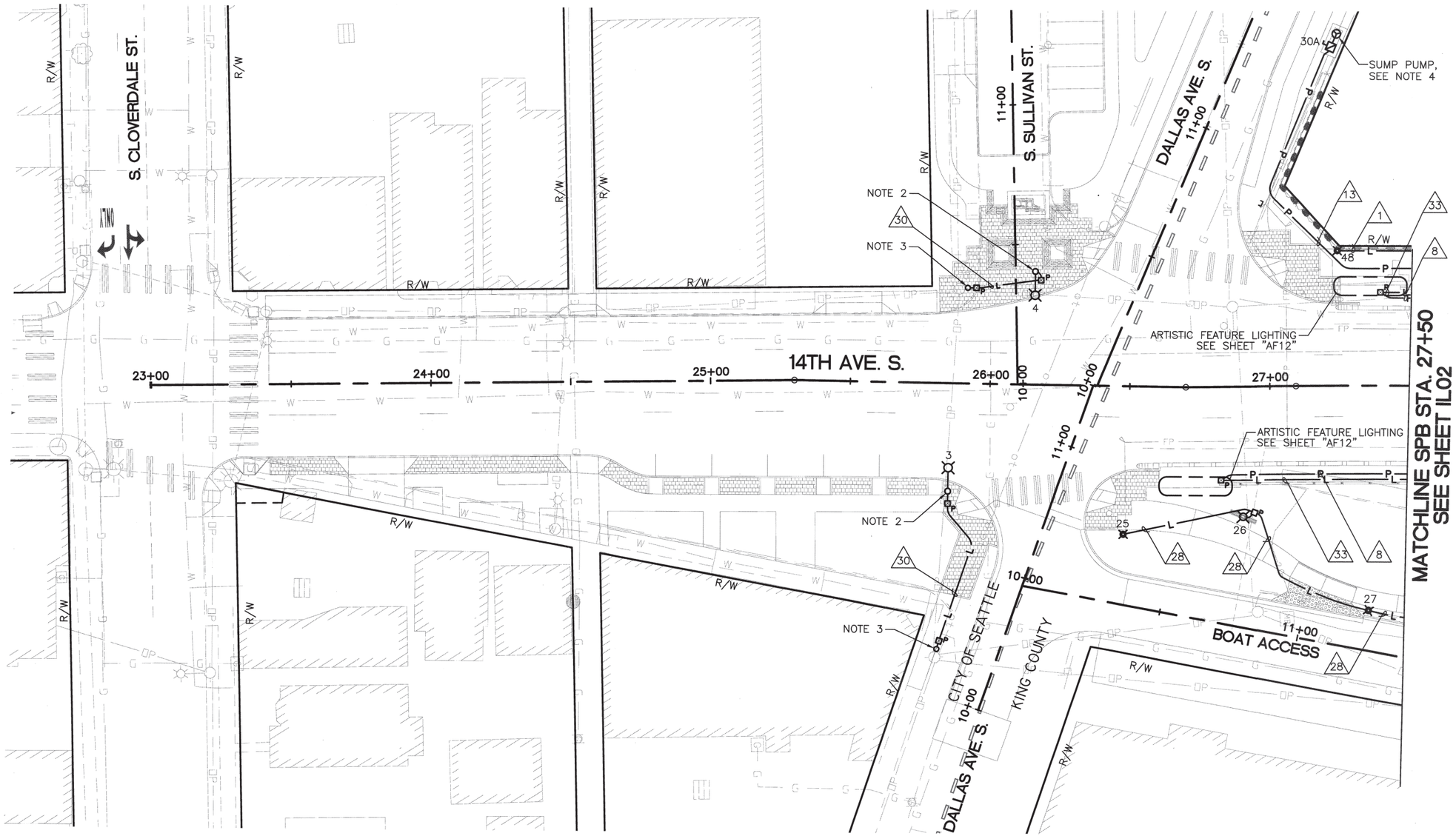

LEGEND:

- L — UNDERGROUND LIGHTING CONDUIT.
- P — UNDERGROUND POWER CONDUIT.
- L — EMBEDDED LIGHTING CONDUIT.
- P — EMBEDDED POWER CONDUIT.
- OP — OVERHEAD POWER LINE
- ROADWAY LIGHT POLE WITH LUMINAIRE
- SIDEWALK LIGHT POLE WITH LUMINAIRE
- UNDERPASS LIGHT
- BOLLARD LIGHT
- TYPE 1 PULL BOX PER WSDOT STD. PLAN J-40.10-00.
- TYPE 4 PULL BOX PER WSDOT STD. PLAN J-11b.
- 18"x12"x6" LOCKABLE NEMA 4 SIDEWALK RATED PULL BOX, EMBEDDED IN CONCRETE.
- TRANSFORMER
- ELECTRICAL PANEL
- FUSED DISCONNECT SWITCH
- X — CONDUIT AND WIRE ID

NOTES:

1. SEE SHEET IL12 FOR CONDUIT AND WIRE SCHEDULE.
2. LUMINAIRE SHALL BE 400W HPS AT 33.5' MOUNTING HEIGHT WITH 8' MAST ARM. USE SEATTLE CITY LIGHT (SCL) STANDARD STOCK. STOCK NUMBERS ARE LISTED BELOW FOR REFERENCE. CONTRACTOR SHALL VERIFY CORRECT EQUIPMENT PRIOR TO PURCHASING.

   LUMINAIRE: SCL STOCK #572801
   MAST ARM: SCL STOCK #570527
   POLE: SCL STOCK #573986
   FOUNDATION: SCL STOCK #568028

   ALSO SEE SCL MATERIAL STANDARD #5739.8
3. INSTALL 3" CONDUIT RISER ON EXISTING POLE. SEE DETAIL 3 ON SHEET IL10 FOR TYPICAL CONDUIT RISER DETAIL. COORDINATE WITH UTILITY FOR 120V POWER CONNECTION.
4. SEE FIRE PROTECTION PLAN SHEETS (FP) FOR BACKFLOW PREVENTER VAULT DETAILS.

LUMINAIRE SCHEDULE

LUMINAIRE NO.	TYPE-DIST-WATT	CIRCUIT	MAST ARM	STATION	OFFSET	POLE HT.	POLE MOUNTING	MISC. ATTACHMENTS
1							NOT USED	–
2							NOT USED	–
3	II – SC – 400 HPS	–	8'	25+87.15	41.1 R	33.5'	SCL STANDARD, SEE NOTE 2	–
4	II – SC – 400 HPS	–	8'	26+16.71	40.5 L	33.5'	SCL STANDARD, SEE NOTE 2	–
25	360° – 70 HPS	PANEL-S2, CKT. 1	–	–	–	–	BOLLARD, SEE SHEET IL10/DETAIL 4	–
26	III – C – 100 HPS	PANEL-S2, CKT. 1	–	–	–	10'	IN GROUND, SEE SHEET LS11	–
27	360° – 70 HPS	PANEL-S2, CKT. 1	–	–	–	–	BOLLARD, SEE SHEET IL10/DETAIL 4	–
48	360° – 70 HPS	PANEL-S2, CKT. 1	–	–	–	–	BOLLARD, SEE SHEET IL10/DETAIL 4	–

20 10 0 20 40
SCALE IN FEET

CALL 2 WORKING DAYS BEFORE YOU DIG
1-800-424-5555
(UNDERGROUND UTILITY LOCATIONS ARE APPROX.)

FIELD BOOK:				
SURVEYED:				
SURVEY BASE MAP:				
DESIGN ENTERED:	L. BRAGG	6/2009		
DESIGNED	L. BRAGG	6/2009		
CHECKED:	P. FORDYCE	1/2010		
SUPERVISOR:	P. FORDYCE	1/2010		

NUM.	REVISION	BY	DATE

PATRICIA L. FORD — STATE OF WASHINGTON — 29930 — REGISTERED PROFESSIONAL ENGINEER — 12-17-10

HNTB

FED. AID No.
TIGERII-BRM-STPUL-1491(002)

PROJECT No. 300197
SURVEY No. 32-24-4-22

MAINTENANCE DIVISION No. 3

KING COUNTY DEPT. OF TRANSPORTATION
HAROLD TANIGUCHI, DIRECTOR

SOUTH PARK BRIDGE #3179 REPLACEMENT

ILLUMINATION PLAN – 1

King County

IL01

SHEET 123 OF 665 SHEETS

316-63

SEC. 32, T.24 N, R.4 E, W.M.

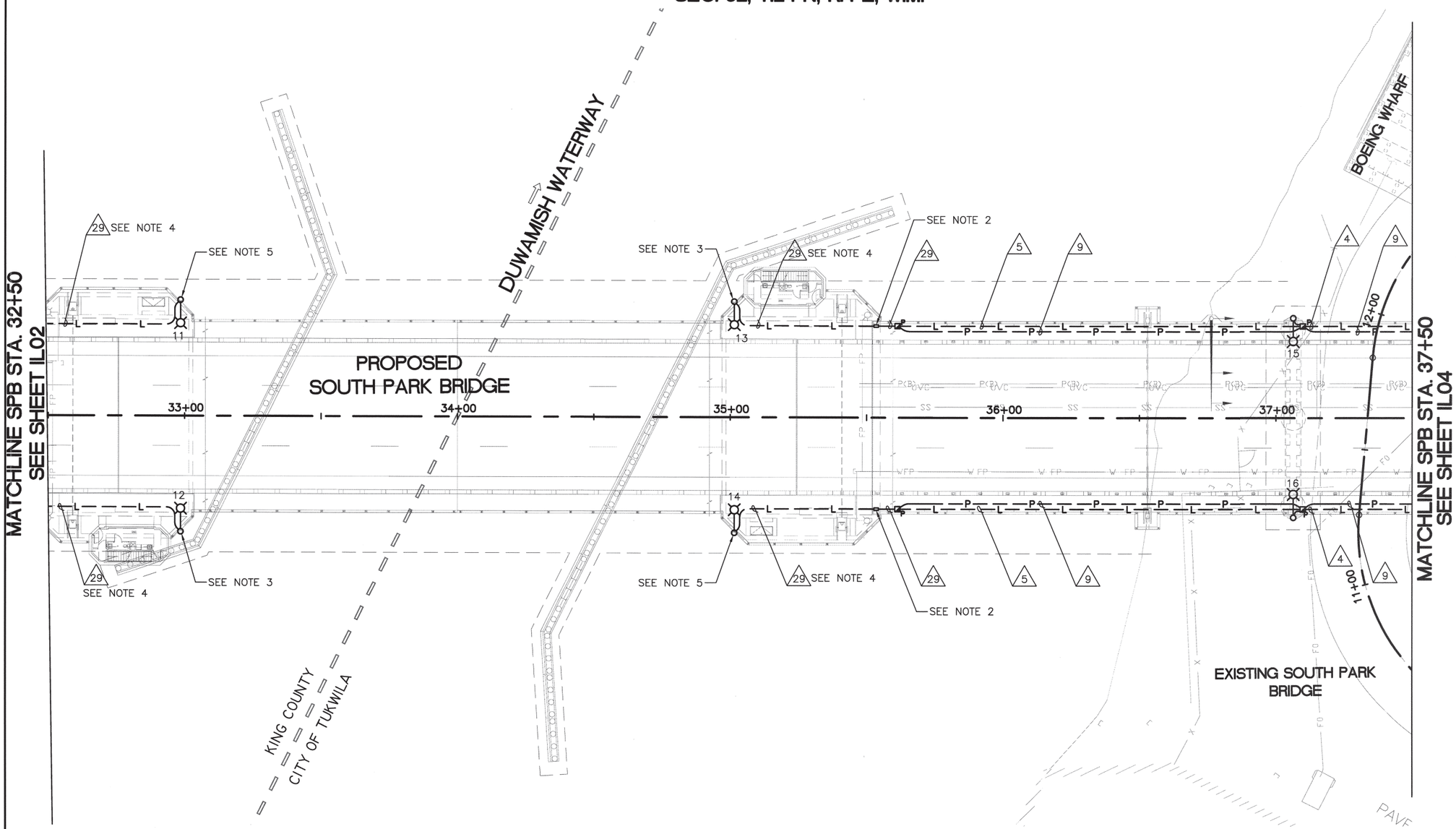

LEGEND:

—L—	UNDERGROUND LIGHTING CONDUIT.
—P—	UNDERGROUND POWER CONDUIT.
— —L— —	EMBEDDED LIGHTING CONDUIT.
— —P— —	EMBEDDED POWER CONDUIT.
—OP—	OVERHEAD POWER LINE
	ROADWAY LIGHT POLE WITH LUMINAIRE
	SIDEWALK LIGHT POLE WITH LUMINAIRE
	UNDERPASS LIGHT
	BOLLARD LIGHT
	TYPE 1 PULL BOX PER WSDOT STD. PLAN J-40.10-00.
	TYPE 4 PULL BOX PER WSDOT STD. PLAN J-11b.
	18"x12"x6" LOCKABLE NEMA 4 SIDEWALK RATED PULL BOX, EMBEDDED IN CONCRETE.
	TRANSFORMER
	ELECTRICAL PANEL
	FUSED DISCONNECT SWITCH
X	CONDUIT AND WIRE ID

NOTES:

1. SEE SHEET IL12 FOR CONDUIT AND WIRE SCHEDULE.
2. INSTALL EXPANSION FITTINGS FOR ALL CONDUIT AT BASCULE PIER 4 BEARING. SEE SHEET RW09 FOR EXPANSION FITTING DETAILS.
3. SEE SHEET BE22 FOR INSTALLATION OF LIGHTNING PROTECTION AIR TERMINAL ON POLE 12 AND 13.
4. FOR LIGHT POLES 11-14 ROUTE CONDUIT TO LIGHT POLE IN STRUCTURAL SLAB. MAINTAIN 2" MIN. CLEARANCE BETWEEN TOP OF CONDUIT AND SIDEWALK/SLAB SURFACE.
5. SEE SHEET BE25 FOR INSTALLATION OF CCTV CAMERA ON POLES 11 & 14.
6. SEE SHEETS IL08 AND IL09 FOR FOR CONDUIT ROUTING AND PULL BOX DETAILS ON BRIDGE STRUCTURE.

LUMINAIRE SCHEDULE

LUMINAIRE NO.	TYPE-DIST-WATT	CIRCUIT	MAST ARM	STATION	OFFSET	POLE HT.	POLE MOUNTING	MISC. ATTACHMENTS
11	II - SC - 400 HPS	PANEL-S2, CKT. 2	4'	32+98.50	41.5 L	37'	MOUNTED ON BASCULE PIER, SEE SHEET IL06/DETAIL 3	CCTV
12	II - SC - 400 HPS	PANEL-S2, CKT. 8	4'	32+98.50	41.5 R	40'	MOUNTED ON BASCULE PIER, SEE SHEET IL06/DETAIL 2	LIGHTNING PROTECTION AIR TERMINAL
13	II - SC - 400 HPS	PANEL-N2, CKT. 2	4'	35+01.50	41.5 L	40'	MOUNTED ON BASCULE PIER, SEE SHEET IL06/DETAIL 2	LIGHTNING PROTECTION AIR TERMINAL
14	II - SC - 400 HPS	PANEL-N2, CKT. 6	4'	35+01.50	41.5 R	37'	MOUNTED ON BASCULE PIER, SEE SHEET IL06/DETAIL 3	CCTV
15	II - SC - 400 HPS	PANEL-N2, CKT. 4	8'	37+06.34	36.6 L	37'	ELBOW MOUNT TO PIER CROSSBEAM, SEE SHEET IL06/DETAIL 1	-
16	II - SC - 400 HPS	PANEL-N2, CKT. 8	8'	37+06.34	36.6 R	37'	ELBOW MOUNT TO PIER CROSSBEAM, SEE SHEET IL06/DETAIL 1	-

20 10 0 20 40
SCALE IN FEET

CALL 2 WORKING DAYS BEFORE YOU DIG
1-800-424-5555
(UNDERGROUND UTILITY LOCATIONS ARE APPROX.)

FIELD BOOK:		
SURVEYED:		
SURVEY BASE MAP:		
DESIGN ENTERED:	L. BRAGG	6/2009
DESIGNED	L. BRAGG	6/2009
CHECKED:	P. FORDYCE	1/2010
SUPERVISOR:	P. FORDYCE	1/2010

NUM.	REVISION	BY	DATE

PATRICIA L. FORDYCE, STATE OF WASHINGTON, 24800, REGISTERED PROFESSIONAL ENGINEER, 12-17-10

HNTB

FED. AID No.
TIGERII-BRM-STPUL-1491(002)

PROJECT No. 300197
SURVEY No. 32-24-4-22

MAINTENANCE DIVISION No. 3

KING COUNTY DEPT. OF TRANSPORTATION
HAROLD TANIGUCHI, DIRECTOR

SOUTH PARK BRIDGE #3179 REPLACEMENT

ILLUMINATION PLAN - 3

King County

IL03

SHEET 125 OF 665 SHEETS

316-63

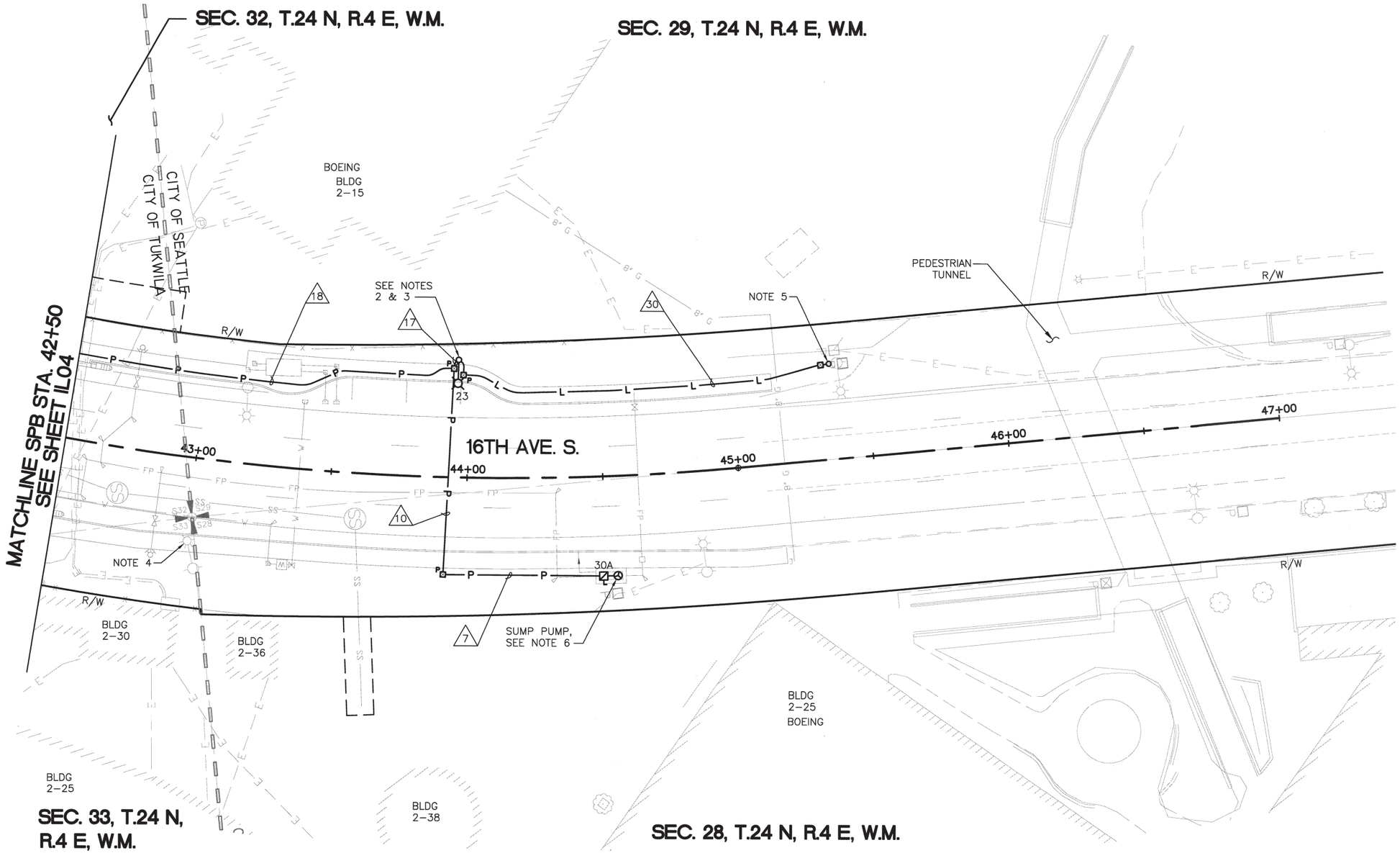

LEGEND:

- L — UNDERGROUND LIGHTING CONDUIT.
- P — UNDERGROUND POWER CONDUIT.
- L — EMBEDDED LIGHTING CONDUIT.
- P — EMBEDDED POWER CONDUIT.
- OP — OVERHEAD POWER LINE
- ROADWAY LIGHT POLE WITH LUMINAIRE
- SIDEWALK LIGHT POLE WITH LUMINAIRE
- UNDERPASS LIGHT
- BOLLARD LIGHT
- TYPE 1 PULL BOX PER WSDOT STD. PLAN J-40.10-00.
- TYPE 4 PULL BOX PER WSDOT STD. PLAN J-11b.
- 18"x12"x6" LOCKABLE NEMA 4 SIDEWALK RATED PULL BOX, EMBEDDED IN CONCRETE.
- TRANSFORMER
- ELECTRICAL PANEL
- FUSED DISCONNECT SWITCH
- X — CONDUIT AND WIRE ID

NOTES:

1. SEE SHEET IL12 FOR CONDUIT AND WIRE SCHEDULE.
2. SEE SHEET BE25 FOR INSTALLATION OF CCTV CAMERA AND WIRELESS RADIO ON POLE 23.
3. LUMINAIRE SHALL BE 400W HPS AT 33.5' MOUNTING HEIGHT WITH 8' MAST ARM. USE SEATTLE CITY LIGHT (SCL) STANDARD STOCK. STOCK NUMBERS ARE LISTED BELOW FOR REFERENCE. CONTRACTOR SHALL VERIFY CORRECT EQUIPMENT PRIOR TO PURCHASING.

   LUMINAIRE: SCL STOCK #572801
   MAST ARM: SCL STOCK #570527
   POLE: SCL STOCK #573986
   FOUNDATION: SCL STOCK #568028

   ALSO SEE SCL MATERIAL STANDARD #5739.8
4. REMOVE AND REPLACE EXISTING LUMINAIRE WITH 400W HPS (SCL STOCK #572801). EXISTING LUMINAIRE SHALL BE SALVAGED AND RETURNED TO SCL. VERIFY ORIENTATION OF EXISTING MAST ARM IS PERPENDICULAR TO NEW ROADWAY ALIGNMENT AND RE-ORIENT IF NECESSARY.
5. INSTALL 3" CONDUIT RISER ON EXISTING POLE. SEE DETAIL 3 ON SHEET IL10 FOR TYPICAL CONDUIT RISER DETAIL. COORDINATE WITH UTILITY FOR 120V POWER CONNECTION.
6. SEE FIRE PROTECTION PLAN SHEETS (FP) FOR BACKFLOW PREVENTER VAULT DETAILS.

20 10 0 20 40
SCALE IN FEET

CALL 2 WORKING DAYS BEFORE YOU DIG 1-800-424-5555
(UNDERGROUND UTILITY LOCATIONS ARE APPROX.)

LUMINAIRE SCHEDULE

LUMINAIRE NO.	TYPE-DIST-WATT	CIRCUIT	MAST ARM	STATION	OFFSET	POLE HT.	POLE MOUNTING	MISC. ATTACHMENTS
23	II - SC - 400 HPS	-	8'	43+96.19	43.2 L	33.5'	SCL STANDARD, SEE NOTE 2	CCTV, WIRELESS RADIO

FIELD BOOK:		
SURVEYED:		
SURVEY BASE MAP:		
DESIGN ENTERED:	L. BRAGG	6/2009
DESIGNED	L. BRAGG	6/2009
CHECKED:	P. FORDYCE	1/2010
SUPERVISOR:	P. FORDYCE	1/2010

NUM.	REVISION	BY	DATE

PATRICIA L. FORDYCE, STATE OF WASHINGTON, 26932, REG. 18TH EXPIRES, PROFESSIONAL ENGINEER — 12-17-10

HNTB

FED. AID No.
TIGERII-BRM-STPUL-1491(002)

PROJECT No. 300197
SURVEY No. 32-24-4-22

MAINTENANCE DIVISION No. 3

KING COUNTY DEPT. OF TRANSPORTATION
HAROLD TANIGUCHI, DIRECTOR

SOUTH PARK BRIDGE #3179 REPLACEMENT

ILLUMINATION PLAN - 5

King County

IL05

SHEET 127 OF 665 SHEETS

316-63

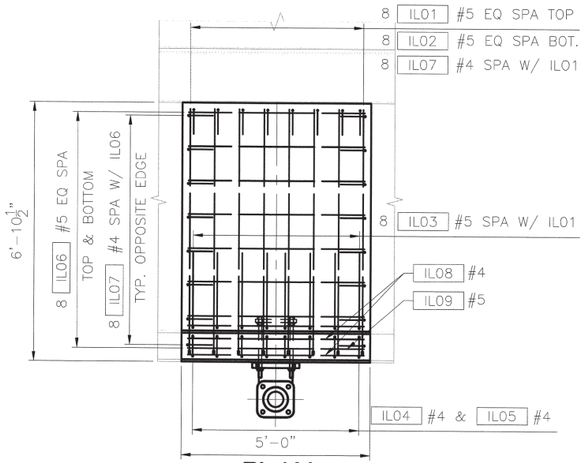

PLAN

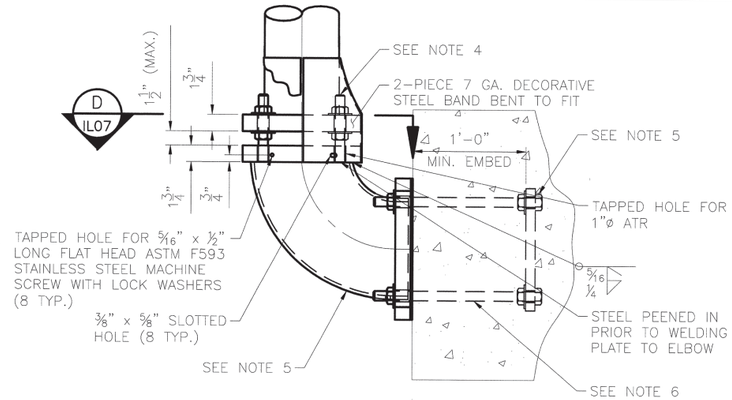

TYPICAL BASE PLATE

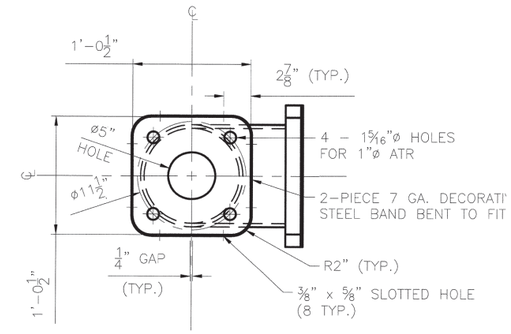

SECTION

D / IL07

ROTATE BASE PLATE ℄ 45° AT POLE ON BASCULE PIER LOCATIONS
N.T.S.

NOTES

1. REFER TO "RW" SHEETS FOR SE WALL COPING REINFORCEMENT AND DETAILS.
2. REFER TO "AS" SHEETS FOR SIDEWALK AND DECK REINFORCEMENT.
3. REFER TO "BP" SHEETS FOR BASCULE PIER WALL AND SLAB REINFORCMENT.
4. 4 – 1"ø x 7" F1554 GR55 ALL THREAD ROD (ATR) TAPPED INTO TOP FLANGE OF ELBOE W/ 2 – HEAVY HEX NUTS, 2 – PLATE WASHERS AND 1 – STANDARD ROUND WASHER EACH ATR. NUTS TO BE FIELD TIGHTENED TO 95 FOOT-POUNDS TORQUE. CAUTION: DO NOT OVER TORQUE. AFTER STATE INSPECTION THREADS TO BE BURRED AT JUNCTION WITH NUT TO PREVENT ROTATION.
5. FOR ELBOW AND ELBOW BOTTOM FLANGE REFER TO WSDOT STANDARD DRAWING #DB00653. FOR ANCHOR PLATE REFER TO WSDOT STANDARD DRAWING 10.2-A7-2.
6. 4 – 1"ø x 1'-5" H.S. BOLTS THREADED FULL LENGTH WITH HARDENED LOCK WASHER AND HEAVY HEX NUTS. TIGHTEN ANCHOR ℙ BETWEEN BOLT HEAD AND HEX NUT/LOCK WASHER.
7. ALL REINFORCING STEEL SHOWN ON THIS SHEET SHALL BE E EPOXY COATED.

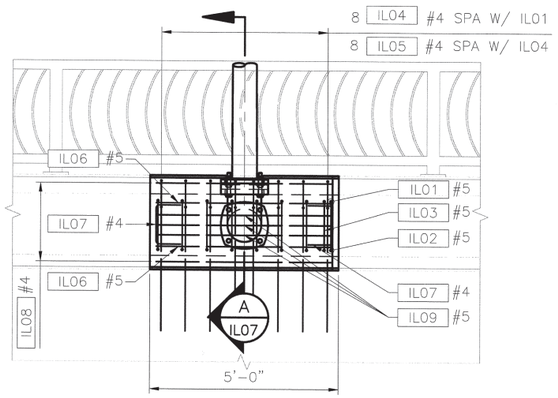

ELEVATION

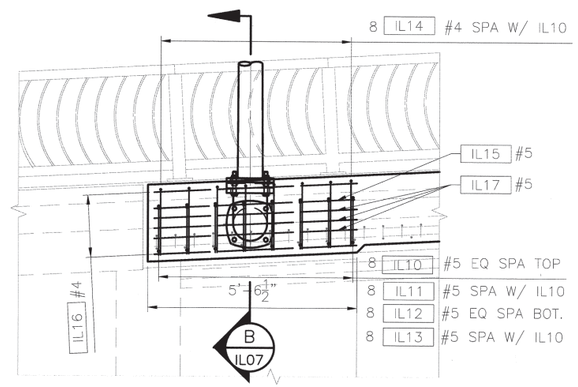

ELEVATION

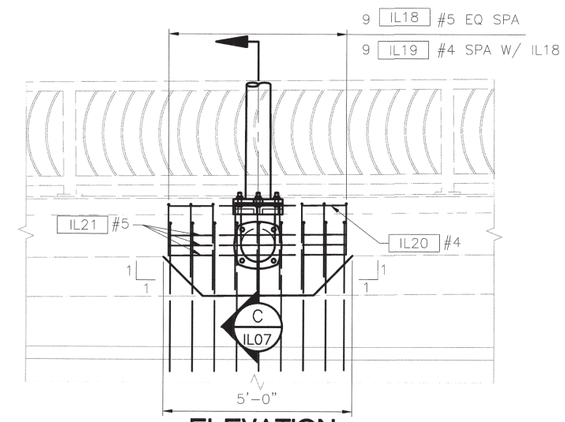

ELEVATION

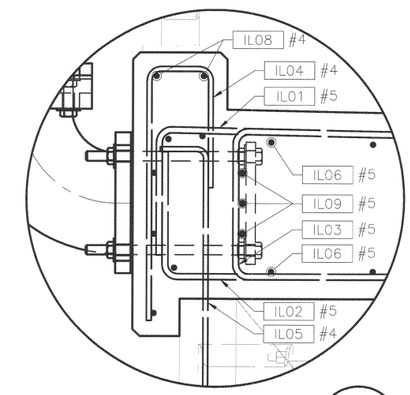

DETAIL

E / IL07

POLE ON SE WALL SHOWN, POLE ON BRIDGE DECK SIMILAR
N.T.S

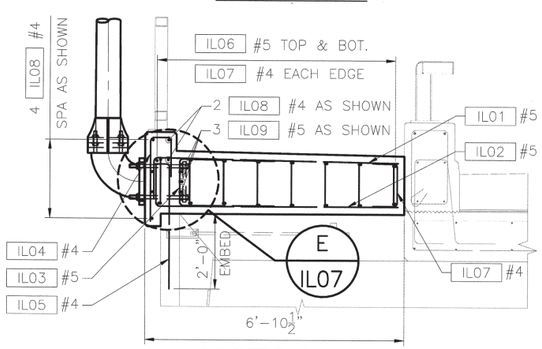

SECTION A-A

POLE ON SE WALL MOMENT SLAB

1 / IL06

N.T.S.

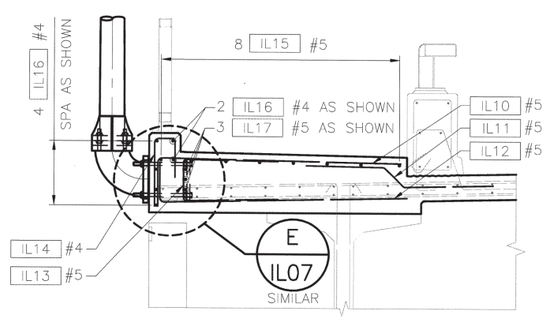

SECTION B-B

POLE ON BRIDGE DECK

2 / IL06

POLE ON PIER CROSSBEAM SIMILAR
N.T.S.

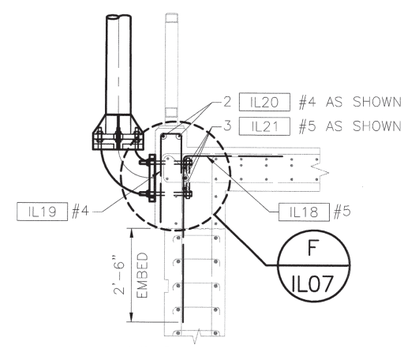

SECTION C-C

POLE ON BASCULE PIER

3 / IL06

N.T.S.

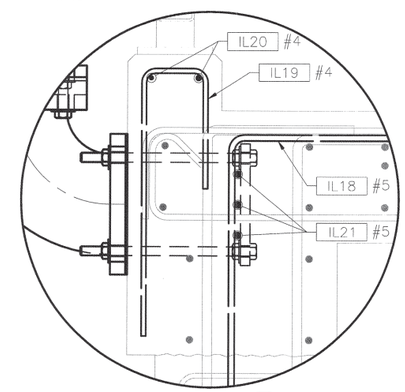

DETAIL

F / IL07

N.T.S

FIELD BOOK:					
SURVEYED:					
SURVEY BASE MAP:					
DESIGN ENTERED:	A. CHAPPELL	12/2009			
DESIGNED	A. CHAPPELL	12/2009			
CHECKED:	F. VESCI	01/2010			
SUPERVISOR:	R. JOHNSON	01/2010	NUM.	REVISION	BY / DATE

RICHARD M. JOHNSON, STATE OF WASHINGTON, 13071, REGISTERED PROFESSIONAL ENGINEER

HNTB

FED. AID No. TIGERII-BRM-STPUL-1491(002)

PROJECT No. 300197

SURVEY No. 32-24-4-22

MAINTENANCE DIVISION No. 3

KING COUNTY DEPT. OF TRANSPORTATION
HAROLD TANIGUCHI, DIRECTOR

SOUTH PARK BRIDGE #3179 REPLACEMENT

ILLUMINATION POLE FOUNDATIONS – 2

King County

IL07

SHEET 129 OF 665 SHEETS

316-63

NOTES:

1. MAINTAIN 2" MIN. CLEARANCE BETWEEN EMBEDDED CONDUIT AND SIDEWALK SURFACE.
2. SEE SHEETS IL06 AND IL07 FOR POLE FOUNDATION DETAILS.
3. SEE PLAN SHEETS IL01 THROUGH IL05 FOR EXACT CONDUIT SIZE AND WIRING.
4. INSTALL PULL BOXES OUTSIDE OF LIGHT POLE FOUNDATION SPACE.

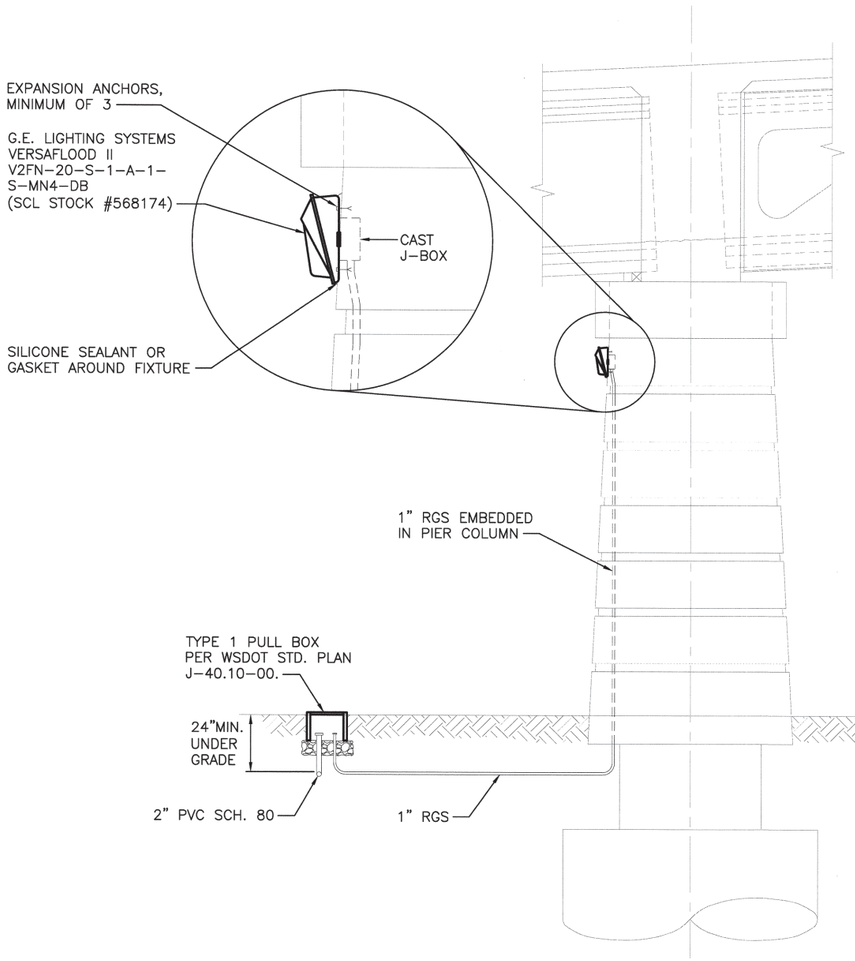

UNDERPASS LIGHT AT PIER 2

1 / IL02

N.T.S.

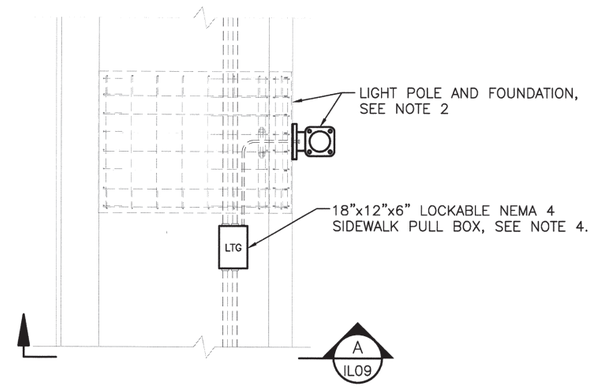

TYPICAL ENLARGED PLAN AT LIGHT POLE (EMBEDDED PULL BOXES)

2 / IL02

N.T.S.

APPLICABLE FOR ROADWAY LIGHT POLES LOCATED BETWEEN SPB STA. 29+00.00 TO SPB STA. 39+00.00 (UNLESS NOTED OTHERWISE ON PLAN SHEETS)

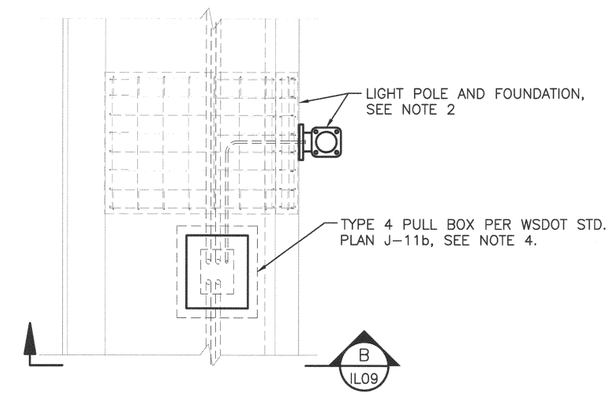

TYPICAL ENLARGED PLAN AT LIGHT POLE (OPEN BOTTOM PULL BOXES)

3 / IL02

N.T.S.

APPLICABLE FOR ROADWAY LIGHT POLES LOCATED BETWEEN SPB STA. 27+00.00 TO SPB STA. 29+00.00, AND SPB STA. 39+00.00 TO SPB STA. 42+00.00 (UNLESS NOTED OTHERWISE ON PLAN SHEETS)

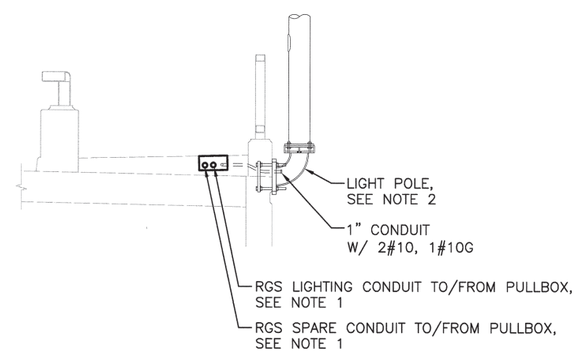

TYPICAL SECTION AT LIGHT POLE (EMBEDDED PULL BOXES)

A / IL09

N.T.S.

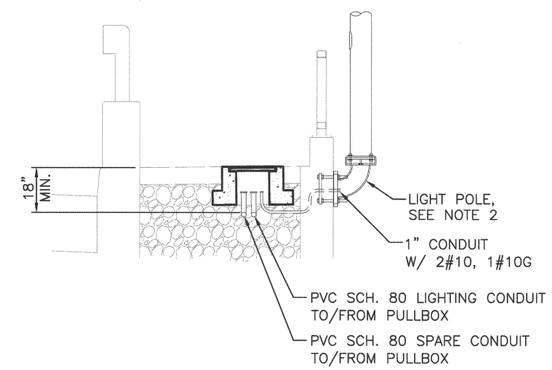

TYPICAL SECTION AT LIGHT POLE (OPEN BOTTOM PULL BOXES)

B / IL09

N.T.S.

CALL 2 WORKING DAYS BEFORE YOU DIG
1-800-424-5555
(UNDERGROUND UTILITY LOCATIONS ARE APPROX.)

FIELD BOOK:			
SURVEYED:			
SURVEY BASE MAP:			
DESIGN ENTERED:	L. BRAGG	6/2009	
DESIGNED	L. BRAGG	6/2009	
CHECKED:	P. FORDYCE	1/2010	
SUPERVISOR:	P. FORDYCE	1/2010	

NUM.	REVISION	BY	DATE

PATRICIA L. FORDYCE, STATE OF WASHINGTON, 26932, REGISTERED PROFESSIONAL ENGINEER, 12-17-10

HNTB

FED. AID No. TIGERII-BRM-STPUL-1491(002)

PROJECT No. 300197

SURVEY No. 32-24-4-22

MAINTENANCE DIVISION No. 3

KING COUNTY DEPT. OF TRANSPORTATION
HAROLD TANIGUCHI, DIRECTOR

SOUTH PARK BRIDGE #3179 REPLACEMENT

ILLUMINATION
ENLARGED PLANS AND SECTIONS – 2

King County

IL09

SHEET 131 OF 665 SHEETS

316-63