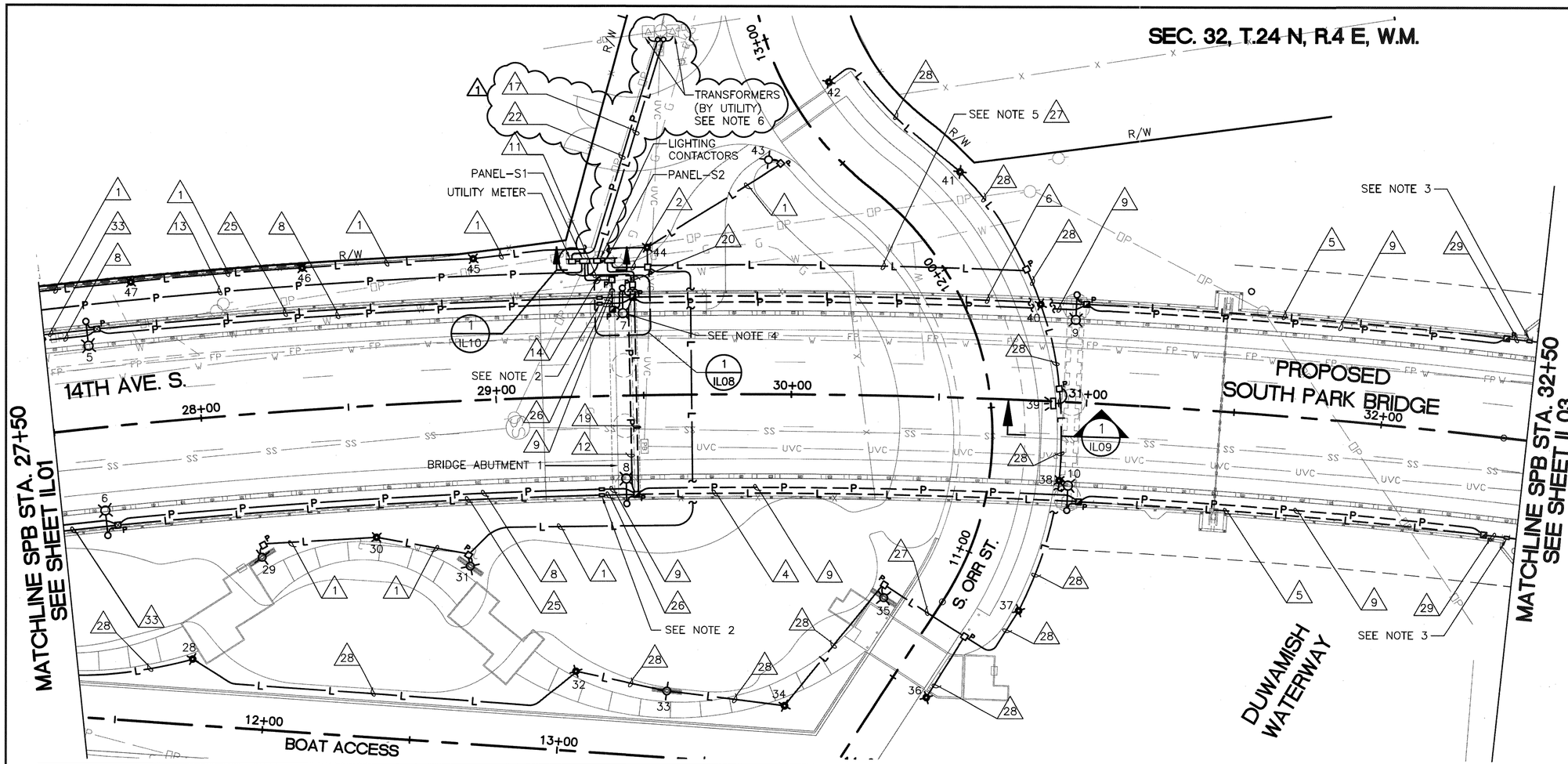

LEGEND:

- UNDERGROUND LIGHTING CONDUIT.
- UNDERGROUND POWER CONDUIT.
- EMBEDDED LIGHTING CONDUIT.
- EMBEDDED POWER CONDUIT.
- OVERHEAD POWER LINE
- ROADWAY LIGHT POLE WITH LUMINAIRE
- SIDEWALK LIGHT POLE WITH LUMINAIRE
- UNDERPASS LIGHT
- BOLLARD LIGHT
- TYPE 1 PULL BOX PER WSDOT STD. PLAN J-40.10-00.
- TYPE 4 PULL BOX PER WSDOT STD. PLAN J-11b.
- 18"x12"x6" LOCKABLE NEMA 4 SIDEWALK RATED PULL BOX, EMBEDDED IN CONCRETE. AT POLE #7 & #8 USE 18"x18"x6" PULL BOX FOR LIGHTING.
- TRANSFORMER
- ELECTRICAL PANEL
- FUSED DISCONNECT SWITCH
- CONDUIT AND WIRE ID

NOTES:

1. SEE SHEET IL12 FOR CONDUIT AND WIRE SCHEDULE.
2. INSTALL DEFLECTION FITTINGS FOR ALL CONDUIT AT BRIDGE ABUTMENT 1 BEARING. CONDUIT SHALL TRANSITION FROM BURIED PVC IN GRADE TO EMBEDDED RGS ON BRIDGE AT THIS POINT. SEE SHEET RW09 FOR DEFLECTION FITTING DETAILS.
3. INSTALL EXPANSION FITTINGS FOR ALL CONDUIT AT BASCULE PIER 3 BEARING. SEE SHEET RW09 FOR EXPANSION FITTING DETAILS.
4. SEE SHEET IL06 ELEVATION FOR INSTALLATION OF THE CCTV CAMERA AND WIRELESS RADIO ON POLE 7.
5. CONDUIT INSTALLED UNDER DRAINAGE DITCH. SEE SHEET DR02 FOR DRAINAGE PLAN.
6. INSTALL 3" CONDUIT RISERS UP POLE TO NEW UTILITY TRANSFORMERS. TWO SEPARATE RISERS SHALL BE INSTALLED, ONE FOR EACH TRANSFORMER. COORDINATE WITH UTILITY FOR CONNECTION TO TRANSFORMERS. (1)
7. SEE SHEETS IL08 AND IL09 FOR FOR CONDUIT ROUTING AND PULL BOX DETAILS ON BRIDGE STRUCTURE.

LUMINAIRE SCHEDULE

LUMINAIRE NO.	TYPE-DIST-WATT	CIRCUIT	MAST ARM	STATION	OFFSET	POLE HT.	POLE MOUNTING	MISC. ATTACHMENTS
5	II – SC – 400 HPS	PANEL-S2, CKT. 4	8'	27+64.50	36.6 L	37'	ELBOW MOUNT TO SE WALL MOMENT SLAB, SEE SHEET IL06/DETAIL 1	–
6	II – SC – 400 HPS	PANEL-S2, CKT. 6	8'	27+64.50	36.6 R	37'	ELBOW MOUNT TO SE WALL MOMENT SLAB, SEE SHEET IL06/DETAIL 1	–
7	II – SC – 400 HPS	PANEL-S2, CKT. 2	8'	29+43.50	36.6 L	37'	ELBOW MOUNT TO BRIDGE DECK, SEE SHEET IL06/DETAIL 1	CCTV, WIRELESS RADIO
8	II – SC – 400 HPS	PANEL-S2, CKT. 8	8'	29+43.50	36.6 R	37'	ELBOW MOUNT TO BRIDGE DECK, SEE SHEET IL06/DETAIL 1	–
9	II – SC – 400 HPS	PANEL-S2, CKT. 4	8'	30+95.00	36.6 L	37'	ELBOW MOUNT TO PIER CROSSBEAM, SEE SHEET IL06/DETAIL 1	–
10	II – SC – 400 HPS	PANEL-S2, CKT. 6	8'	30+95.00	36.6 R	37'	ELBOW MOUNT TO PIER CROSSBEAM, SEE SHEET IL06/DETAIL 1	–
28	360° – 70 HPS	PANEL-S2, CKT. 1	–	–	–	–	BOLLARD, SEE SHEET IL10/DETAIL 4	–
29	III – C – 100 HPS	PANEL-S2, CKT. 1	–	–	–	10'	IN GROUND, SEE SHEET LS11	–
30	360° – 70 HPS	PANEL-S2, CKT. 1	–	–	–	–	BOLLARD, SEE SHEET IL10/DETAIL 4	–
31	III – C – 100 HPS	PANEL-S2, CKT. 1	–	–	–	10'	IN GROUND, SEE SHEET LS11	–
32	360° – 70 HPS	PANEL-S2, CKT. 1	–	–	–	–	BOLLARD, SEE SHEET IL10/DETAIL 4	–
33	III – C – 100 HPS	PANEL-S2, CKT. 1	–	–	–	10'	IN GROUND, SEE SHEET LS11	–
34	360° – 70 HPS	PANEL-S2, CKT. 1	–	–	–	–	BOLLARD, SEE SHEET IL10/DETAIL 4	–
35	III – C – 100 HPS	PANEL-S2, CKT. 1	–	–	–	10'	IN GROUND, SEE SHEET LS11	–
36	360° – 70 HPS	PANEL-S2, CKT. 1	–	–	–	–	BOLLARD, SEE SHEET IL10/DETAIL 4	–
37–38	180° – 70 HPS	PANEL-S2, CKT. 1	–	–	–	–	BOLLARD, PROVIDE 180° HOUSESIDE SHIELD, SEE SHEET IL10/DETAIL 4	–
39	IV – MN – 150 HPS	PANEL-S2, CKT. 1	–	–	–	–	UNDERDECK LUMINAIRE, MOUNT TO PIER AT 12' ABOVE UNDERPASSING ROADWAY	–
40–41	180° – 70 HPS	PANEL-S2, CKT. 1	–	–	–	–	BOLLARD, PROVIDE 180° HOUSESIDE SHIELD, SEE SHEET IL10/DETAIL 4	–
42	360° – 70 HPS	PANEL-S2, CKT. 1	–	–	–	–	BOLLARD, SEE SHEET IL10/DETAIL 4	–
43	III – C – 100 HPS	PANEL-S2, CKT. 1	–	–	–	10'	IN GROUND, NEW POLE AND BASE, SEE SHEET IL10/DETAIL 5	–
44–47	360° – 70 HPS	PANEL-S2, CKT. 1	–	–	–	–	BOLLARD, SEE SHEET IL10/DETAIL 4	–

SCALE IN FEET: 20 10 0 20 40

CALL 2 WORKING DAYS BEFORE YOU DIG
1-800-424-5555
(UNDERGROUND UTILITY LOCATIONS ARE APPROX.)

FIELD BOOK:		
SURVEYED:		
SURVEY BASE MAP:		
DESIGN ENTERED:	L. BRAGG	6/2009
DESIGNED	L. BRAGG	6/2009
CHECKED:	P. FORDYCE	1/2010
SUPERVISOR:	P. FORDYCE	1/2010

NUM.	REVISION	BY	DATE
1	ADDENDUM #2	LMB	02/23/11

PATRICIA L. FORDYCE, STATE OF WASHINGTON, 26932, REGISTERED PROFESSIONAL ENGINEER, 2-23-11

HNTB

FED. AID No. TIGERII-BRM-STPUL-1491(002)
PROJECT No. 300197
SURVEY No. 32-24-4-22
MAINTENANCE DIVISION No. 3

KING COUNTY DEPT. OF TRANSPORTATION
HAROLD TANIGUCHI, DIRECTOR

SOUTH PARK BRIDGE #3179 REPLACEMENT

ILLUMINATION PLAN – 2

King County

IL02

SHEET 124 OF 665 SHEETS

316-63

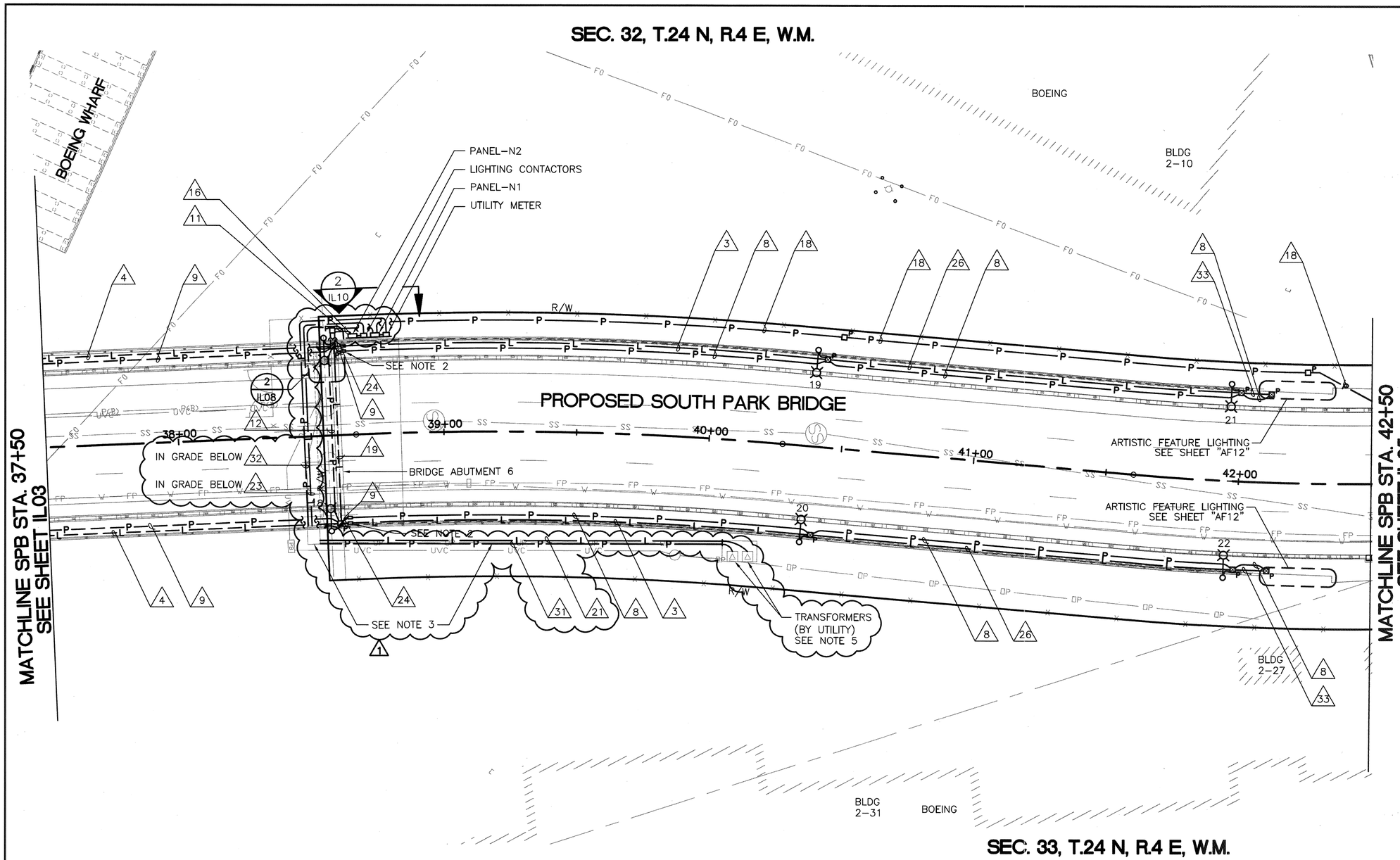

LEGEND:

- UNDERGROUND LIGHTING CONDUIT.
- UNDERGROUND POWER CONDUIT.
- EMBEDDED LIGHTING CONDUIT.
- EMBEDDED POWER CONDUIT.
- OVERHEAD POWER LINE
- ROADWAY LIGHT POLE WITH LUMINAIRE
- SIDEWALK LIGHT POLE WITH LUMINAIRE
- UNDERPASS LIGHT
- BOLLARD LIGHT
- TYPE 1 PULL BOX PER WSDOT STD. PLAN J-40.10-00.
- TYPE 4 PULL BOX PER WSDOT STD. PLAN J-11b.
- 18"x12"x6" LOCKABLE NEMA 4 SIDEWALK RATED PULL BOX, EMBEDDED IN CONCRETE. AT POLE #17 & #18 USE 18"x18"x6" PULL BOX.
- TRANSFORMER
- ELECTRICAL PANEL
- FUSED DISCONNECT SWITCH
- CONDUIT AND WIRE ID
- UTILITY PULL BOX, SEE 'UT' SHEETS.

NOTES:

1. SEE SHEET IL12 FOR CONDUIT AND WIRE SCHEDULE.
2. INSTALL DEFLECTION FITTINGS FOR ALL CONDUIT AT BRIDGE ABUTMENT 6 BEARING. CONDUIT SHALL TRANSITION FROM BURIED PVC IN GRADE TO EMBEDDED RGS ON BRIDGE AT THIS POINT. SEE SHEET RW09 FOR DEFLECTION FITTING DETAILS.
3. FOR DUCTBANK AND VAULT INSTALLATION SEE SHEET UT06 AND "SIX CONDUIT DUCTBANK" ON SHEET UT15.
4. SEE SHEETS IL08 AND IL09 FOR FOR CONDUIT ROUTING AND PULL BOX DETAILS ON BRIDGE STRUCTURE.
5. COORDINATE WITH UTILITY FOR CONNECTION TO TRANSFORMERS IN VAULT.

LUMINAIRE SCHEDULE

LUMINAIRE NO.	TYPE-DIST-WATT	CIRCUIT	MAST ARM	STATION	OFFSET	POLE HT.	POLE MOUNTING	MISC ATTACHMENTS
17	II - SC - 400 HPS	PANEL-N2, CKT. 2	8'	38+56.18	36.6 L	37'	ELBOW MOUNT TO BRIDGE DECK, SEE SHEET IL06/DETAIL 1	-
18	II - SC - 400 HPS	PANEL-N2, CKT. 6	8'	38+56.18	36.6 R	37'	ELBOW MOUNT TO BRIDGE DECK, SEE SHEET IL06/DETAIL 1	-
19	II - SC - 400 HPS	PANEL-N2, CKT. 4	8'	40+37.66	36.6 L	37'	ELBOW MOUNT TO SE WALL MOMENT SLAB, SEE SHEET IL06/DETAIL 1	-
20	II - SC - 400 HPS	PANEL-N2, CKT. 8	8'	40+37.66	36.6 R	37'	ELBOW MOUNT TO SE WALL MOMENT SLAB, SEE SHEET IL06/DETAIL 1	-
21	II - SC - 400 HPS	PANEL-N2, CKT. 2	8'	41+95.83	36.6 L	37'	ELBOW MOUNT TO SE WALL MOMENT SLAB, SEE SHEET IL06/DETAIL 1	-
22	II - SC - 400 HPS	PANEL-N2, CKT. 6	8'	41+96.83	36.6 R	37'	ELBOW MOUNT TO SE WALL MOMENT SLAB, SEE SHEET IL06/DETAIL 1	-

20 10 0 20 40
SCALE IN FEET

CALL 2 WORKING DAYS BEFORE YOU DIG
1-800-424-5555
(UNDERGROUND UTILITY LOCATIONS ARE APPROX.)

FIELD BOOK:				
SURVEYED:				
SURVEY BASE MAP:				
DESIGN ENTERED:	L. BRAGG	6/2009		
DESIGNED	L. BRAGG	6/2009		
CHECKED:	P. FORDYCE	1/2010		
SUPERVISOR:	P. FORDYCE	1/2010		

NUM.	REVISION	BY	DATE
1	ADDENDUM #2	LMB	02/23/11

PATRICIA L. FORDYCE — STATE OF WASHINGTON — 26932 — REGISTERED PROFESSIONAL ENGINEER — 2-23-11

HNTB

FED. AID No.
TIGERII-BRM-STPUL-1491(002)

PROJECT No. 300197
SURVEY No. 32-24-4-22

MAINTENANCE DIVISION No. 3

KING COUNTY DEPT. OF TRANSPORTATION
HAROLD TANIGUCHI, DIRECTOR

SOUTH PARK BRIDGE #3179 REPLACEMENT

ILLUMINATION PLAN - 4

King County

IL04

SHEET 126 OF 665 SHEETS

316-63

NOTES

1. REFER TO LUMINAIRE SCHEDULES ON SHEETS "IL01" THROUGH "IL05" FOR LUMINAIRE LOCATIONS AND CORRESPONDING POLE MOUNTING TYPES.
2. MANUFACTURER TO PROVIDE BASE PLATE WITH 4 – 1"ø BOLTS ON AN 11½"ø BOLT CIRCLE. SEE SHEET "IL07" FOR TYPICAL BASE PLATE DETAILS.
3. REFER TO LUMINAIRE SCHEDULES ON SHEETS "IL01" THROUGH "IL05" FOR RADIO TRANSCEIVER AND CCTV CAMERA LOCATIONS.

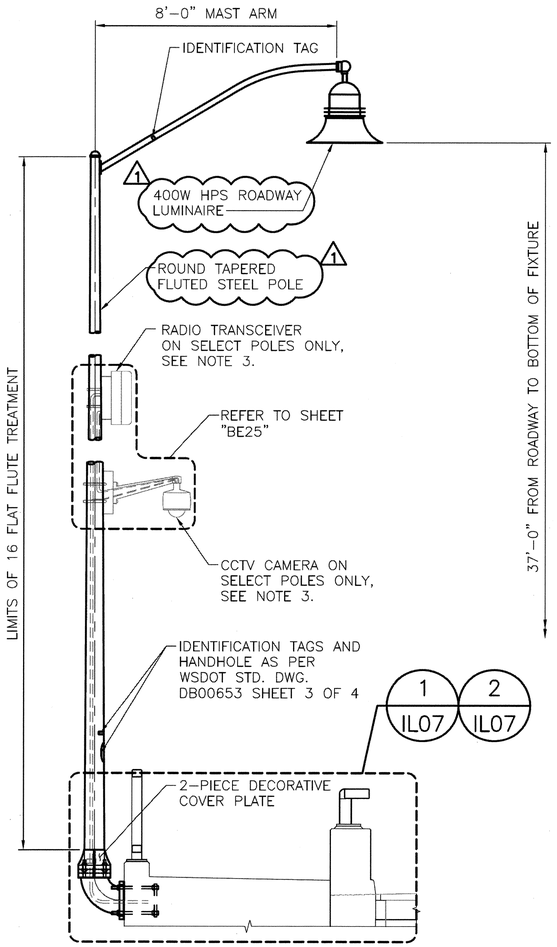

ELEVATION ELBOW MOUNT

POLE ON SE WALL MOMENT SLAB, BRIDGE DECK & PIER CROSSBEAM
N.T.S.

1 IL02 | 1 IL04 | 1 IL05

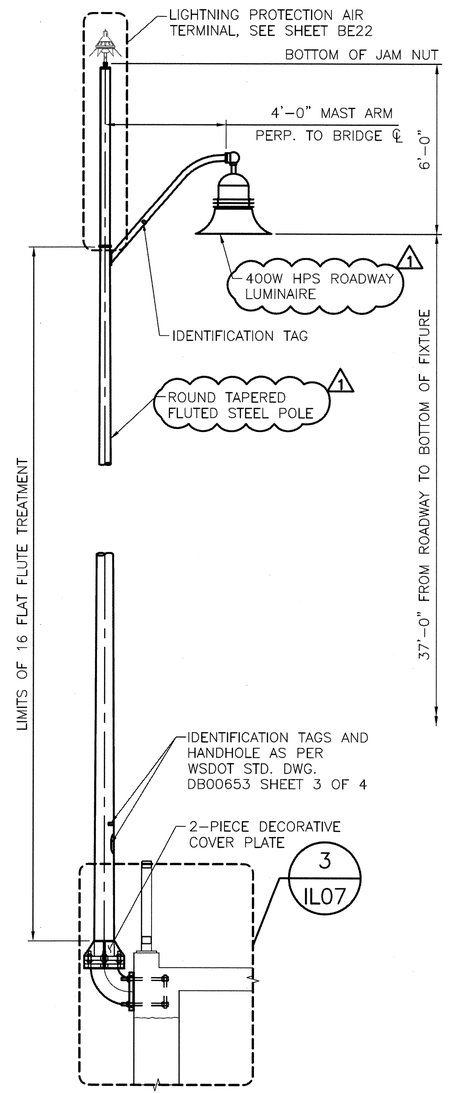

ELEVATION BASCULE PIER MOUNT

POLE ON BASCULE PIER WITH LIGHTNING PROTECTION
N.T.S.

2 IL03

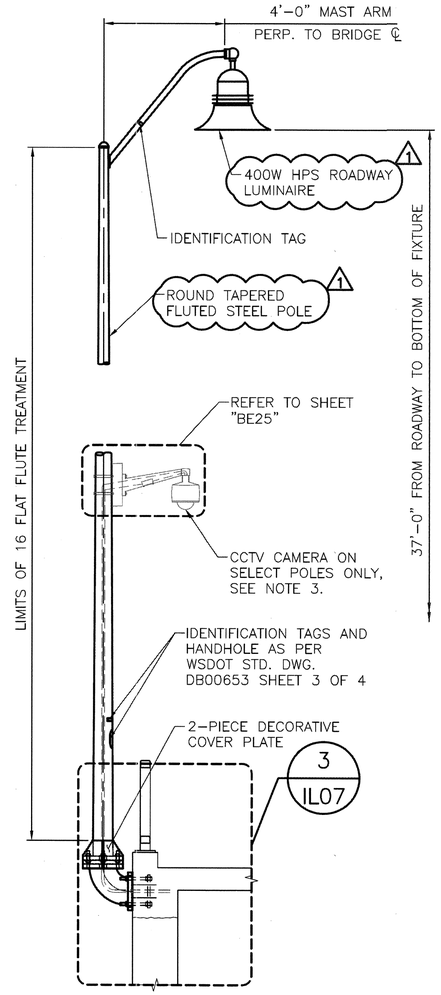

ELEVATION BASCULE PIER MOUNT

POLE ON BASCULE PIER WITHOUT LIGHTNING PROTECTION
N.T.S.

3 IL03

FIELD BOOK:					
SURVEYED:					
SURVEY BASE MAP:					
DESIGN ENTERED:	A. CHAPPELL	12/2009			
DESIGNED	A. CHAPPELL	12/2009			
CHECKED:	F. VESCI	12/2009			
SUPERVISOR:	R. JOHNSON	01/2010	1 ADDENDUM #2	LMB	02/23/11
			NUM. REVISION	BY	DATE

RICHARD M. JOHNSON, STATE OF WASHINGTON, 43071, REGISTERED PROFESSIONAL ENGINEER, 2-23-11

HNTB

FED. AID No.
TIGERII–BRM–STPUL–1491(002)

PROJECT No. 300197
SURVEY No. 32–24–4–22

MAINTENANCE DIVISION No. 3

KING COUNTY DEPT. OF TRANSPORTATION
HAROLD TANIGUCHI, DIRECTOR

SOUTH PARK BRIDGE #3179 REPLACEMENT

ILLUMINATION POLE FOUNDATIONS – 1

King County

IL06

SHEET 128 OF 665 SHEETS

316-63

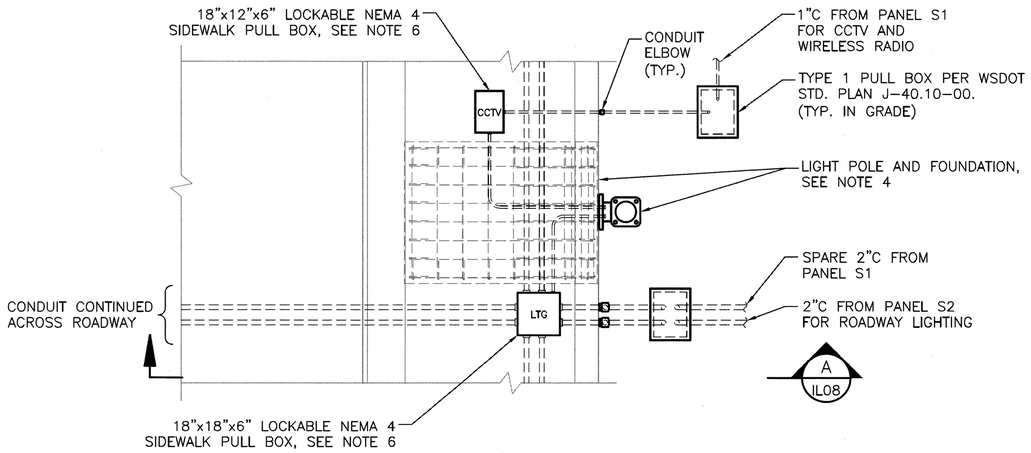

ENLARGED PLAN AT LIGHT POLE 7 (1 / IL02)

N.T.S.

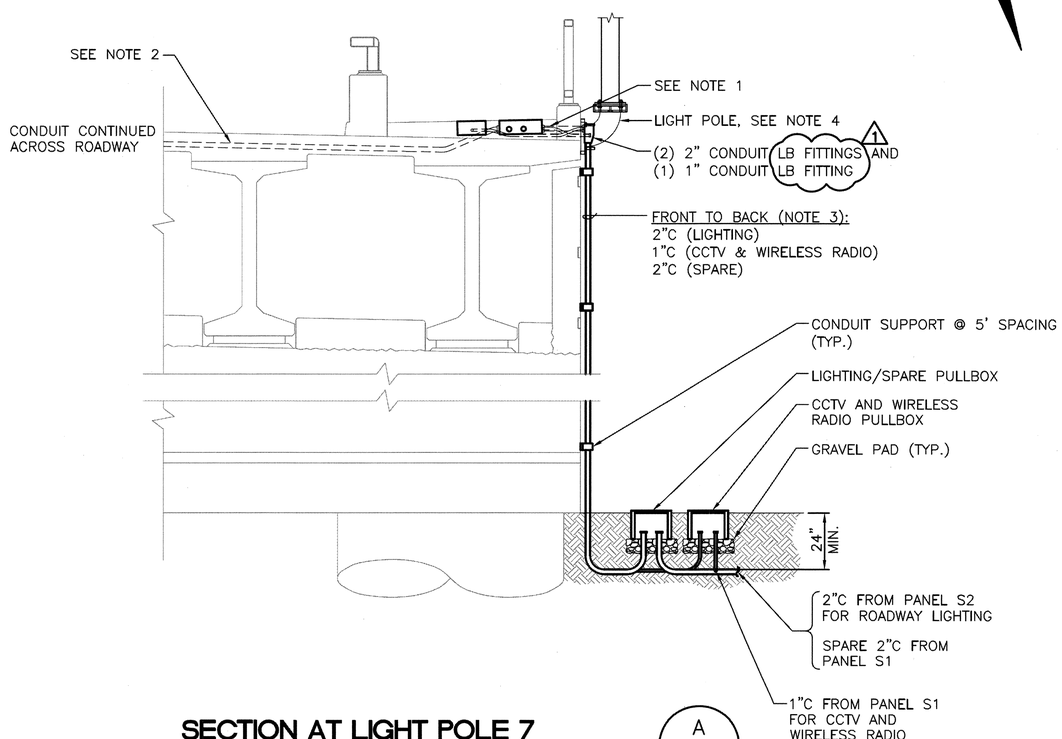

SECTION AT LIGHT POLE 7 (A / IL08)

N.T.S.

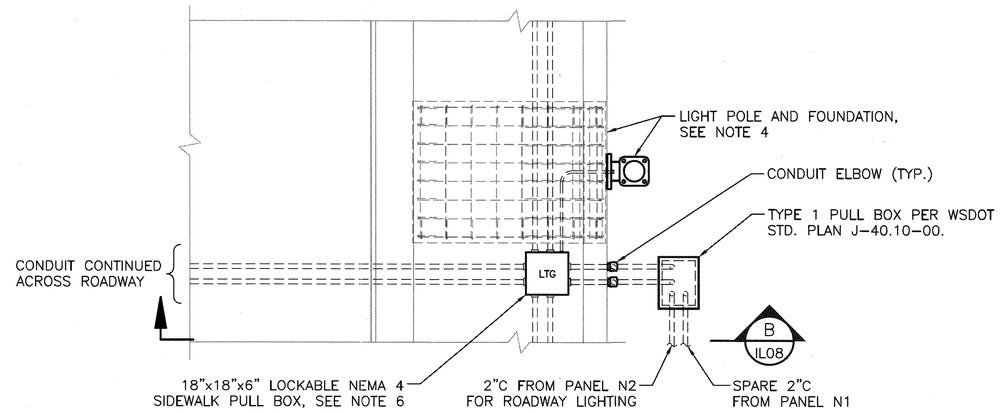

ENLARGED PLAN AT LIGHT POLE 17 (2 / IL04)

N.T.S.

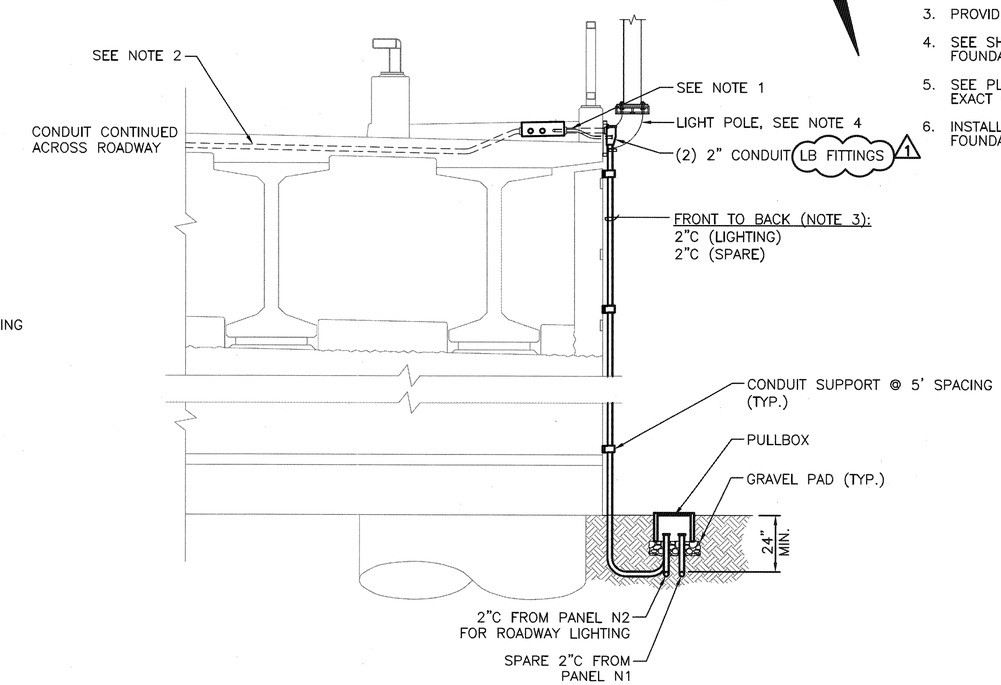

SECTION AT LIGHT POLE 17 (B / IL08)

N.T.S.

NOTES:

1. MAINTAIN 2" MIN. CLEARANCE BETWEEN EMBEDDED CONDUIT AND SIDEWALK SURFACE.
2. MAINTAIN 4" MIN. CLEARANCE BETWEEN EMBEDDED CONDUIT AND ROADWAY SURFACE.
3. PROVIDE VERTICAL WIRE SUPPORT IN CONDUIT.
4. SEE SHEETS IL06 AND IL07 FOR POLE FOUNDATION DETAILS.
5. SEE PLAN SHEET IL01 THROUGH IL05 FOR EXACT CONDUIT SIZE AND WIRING.
6. INSTALL PULL BOXES OUTSIDE OF LIGHT POLE FOUNDATION SPACE.

FIELD BOOK:		
SURVEYED:		
SURVEY BASE MAP:		
DESIGN ENTERED:	L. BRAGG	6/2009
DESIGNED	L. BRAGG	6/2009
CHECKED:	P. FORDYCE	1/2010
SUPERVISOR:	P. FORDYCE	1/2010

NUM.	REVISION	BY	DATE
1	ADDENDUM #2	LMB	02/23/11

PATRICIA L. FORDYCE, STATE OF WASHINGTON, 26932, REGISTERED PROFESSIONAL ENGINEER, 2-23-11

HNTB

FED. AID No. TIGERII-BRM-STPUL-1491(002)

PROJECT No. 300197

SURVEY No. 32-24-4-22

MAINTENANCE DIVISION No. 3

KING COUNTY DEPT. OF TRANSPORTATION
HAROLD TANIGUCHI, DIRECTOR

SOUTH PARK BRIDGE #3179 REPLACEMENT

ILLUMINATION
ENLARGED PLANS AND SECTIONS – 1

King County

IL08

SHEET 130 OF 665 SHEETS

316-63

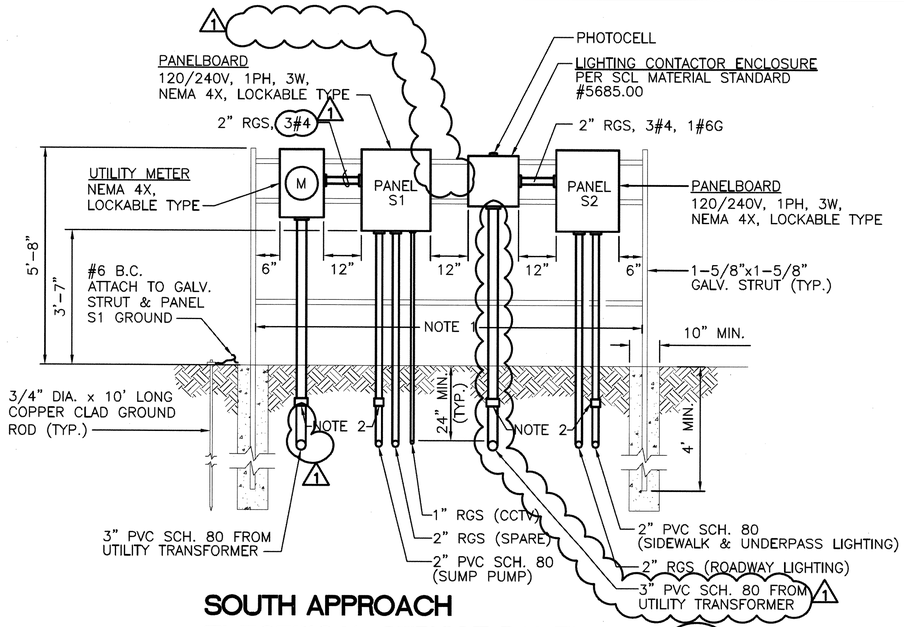

SOUTH APPROACH ELECTRICAL SERVICE PANELS

N.T.S.

1 / IL02

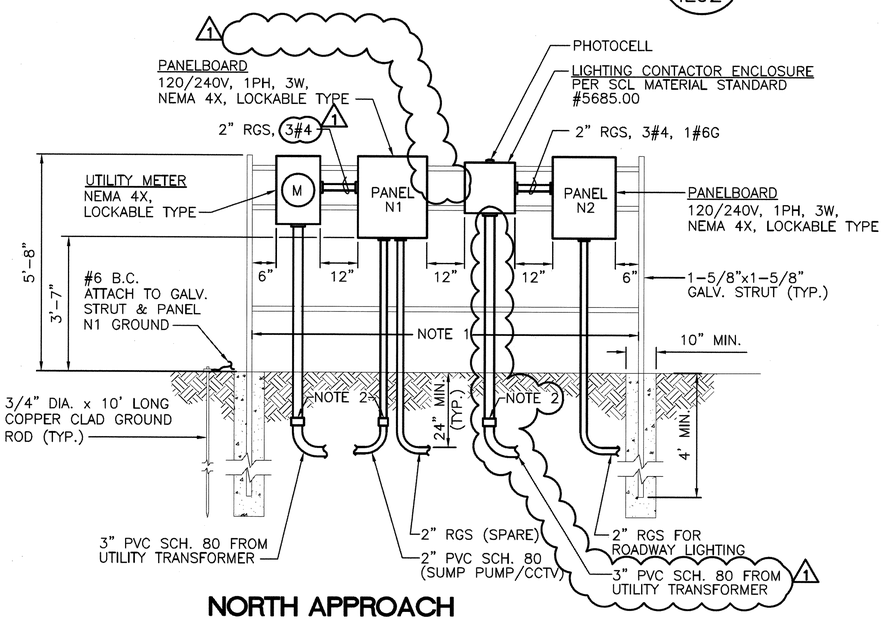

NORTH APPROACH ELECTRICAL SERVICE PANELS

N.T.S.

2 / IL04

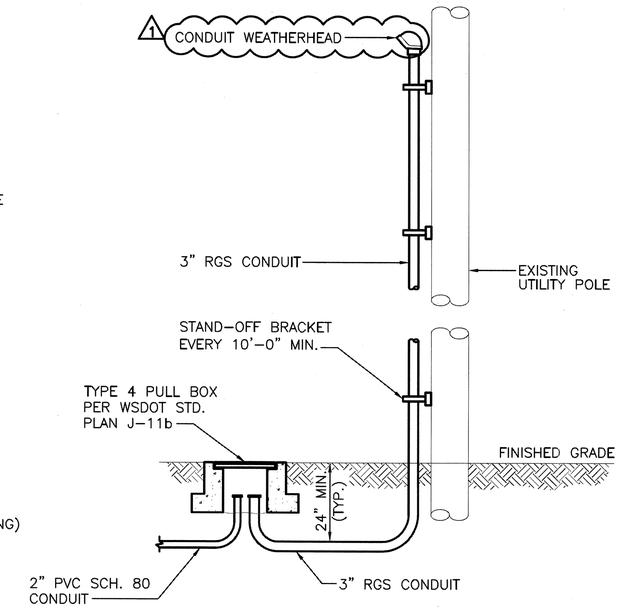

TYPICAL CONDUIT RISER

N.T.S.

3 / IL01 IL05

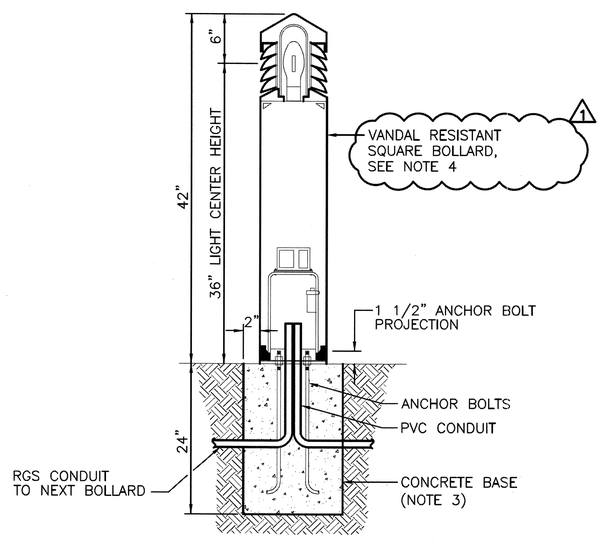

TYPICAL BOLLARD DETAIL

N.T.S.

4 / IL01 IL02

NOTES:

1. CONTRACTOR TO SIZE FOR EXACT EQUIPMENT BEFORE CONSTRUCTING.
2. CONDUIT SHALL TRANSITION FROM PVC TO RGS FOR ABOVE GROUND CONNECTION TO SERVICE PANEL.
3. DIMENSIONS SHOWN ARE FOR REFERENCE FOR TYPICAL BOLLARD INSTALLATION. INSTALL AS REQUIRED PER MANUFACTURERS INSTRUCTIONS.
4. HOUSESIDE SHIELD REQUIRED IN SOME LOCATIONS ONLY. SEE LUMINAIRE SCHEDULES ON SHEET IL01 AND IL02.

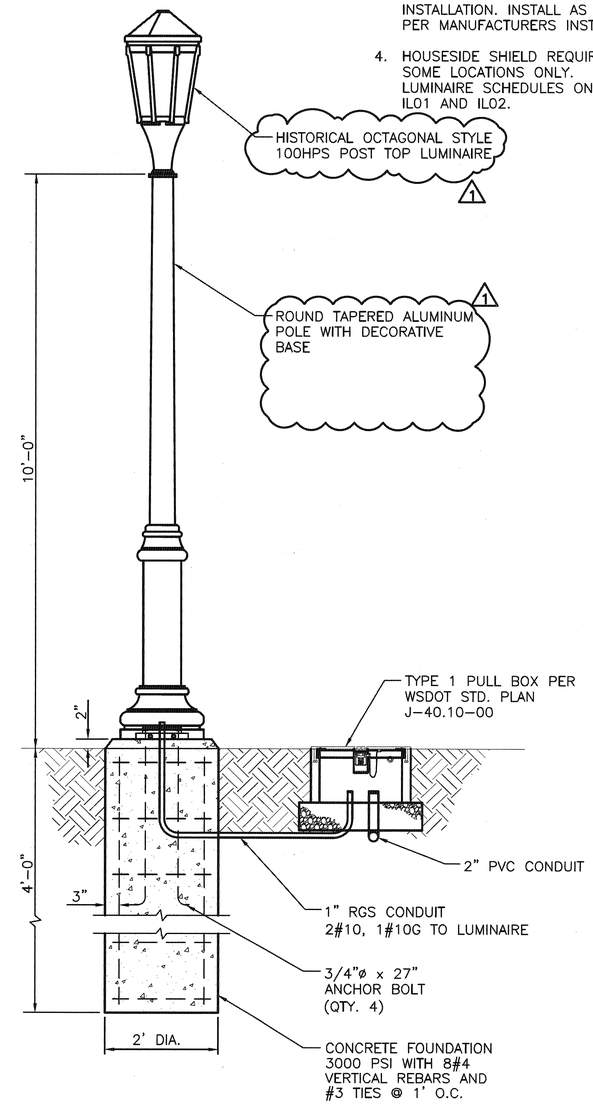

TYPICAL LUMINAIRE POLE DETAIL

N.T.S.

5 / IL02

FIELD BOOK:				
SURVEYED:				
SURVEY BASE MAP:				
DESIGN ENTERED:	L. BRAGG	6/2009		
DESIGNED	L. BRAGG	6/2009		
CHECKED:	P. FORDYCE	1/2010		
SUPERVISOR:	P. FORDYCE	1/2010		

NUM.	REVISION	BY	DATE
1	ADDENDUM #2	LMB	02/23/11

PATRICIA L. FORDYCE, STATE OF WASHINGTON, 26932, REGISTERED PROFESSIONAL ENGINEER, 2-23-11

HNTB

FED. AID No.
TIGERII-BRM-STPUL-1491(002)

PROJECT No. 300197

SURVEY No. 32-24-4-22

MAINTENANCE DIVISION No. 3

KING COUNTY DEPT. OF TRANSPORTATION
HAROLD TANIGUCHI, DIRECTOR

SOUTH PARK BRIDGE #3179 REPLACEMENT

ILLUMINATION DETAILS

King County

IL10

SHEET 132 OF 665 SHEETS

316-63

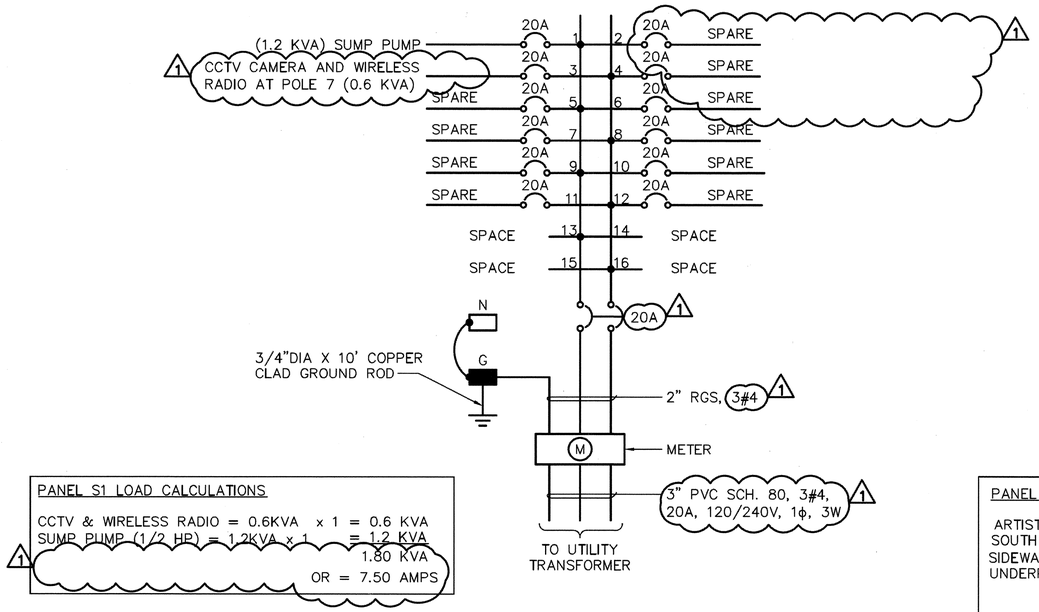

PANEL S1 LOAD CALCULATIONS

CCTV & WIRELESS RADIO = 0.6KVA x 1 = 0.6 KVA
SUMP PUMP (1/2 HP) = 1.2KVA x 1 = 1.2 KVA
1.80 KVA
OR = 7.50 AMPS

PANEL 'S1'

1

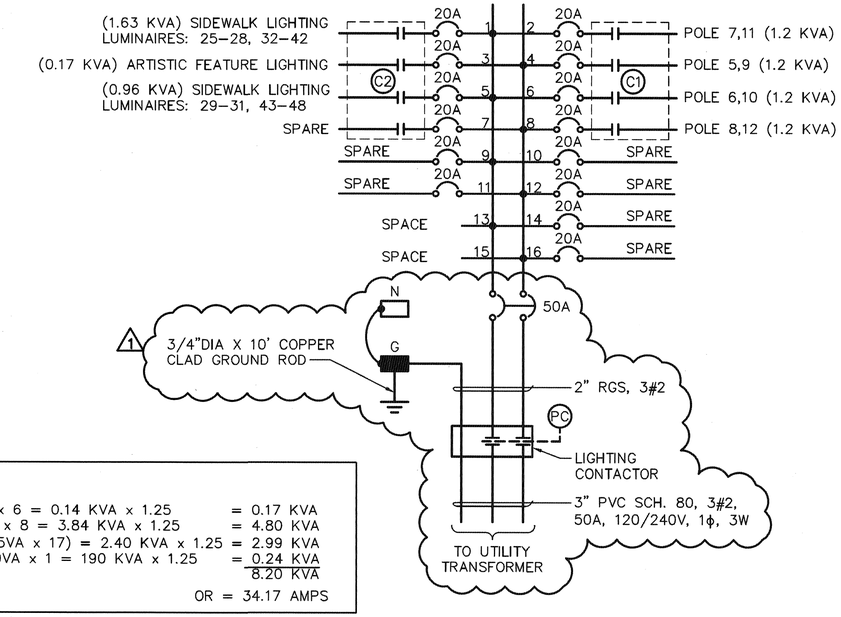

PANEL S2 LOAD CALCULATIONS

ARTISTIC FEATURE LIGHTING = 22VA x 6 = 0.14 KVA x 1.25 = 0.17 KVA
SOUTH APPROACH LIGHTING = 480VA x 8 = 3.84 KVA x 1.25 = 4.80 KVA
SIDEWALK LIGHTING = (130VA x 6) (95VA x 17) = 2.40 KVA x 1.25 = 2.99 KVA
UNDERPASS ROADWAY LIGHTING = 190VA x 1 = 190 KVA x 1.25 = 0.24 KVA
8.20 KVA
OR = 34.17 AMPS

PANEL 'S2'

2

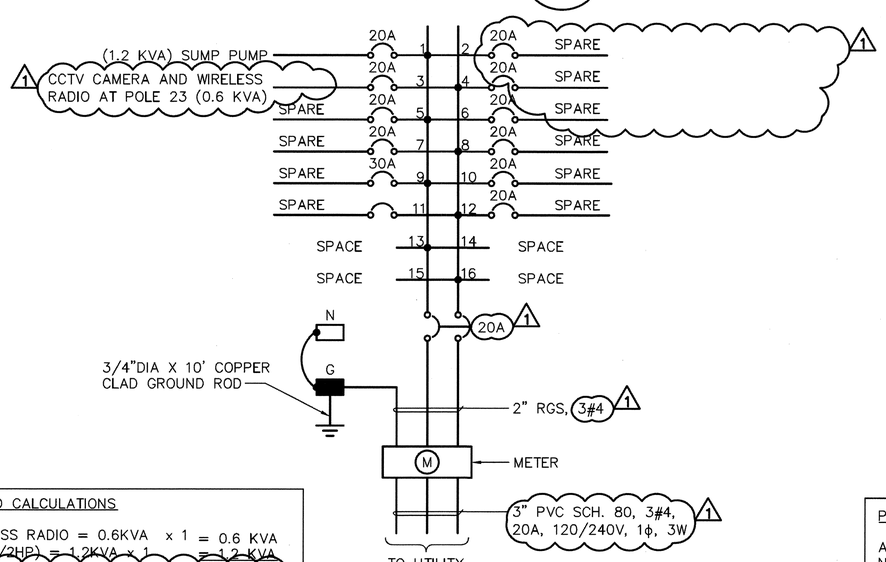

PANEL N1 LOAD CALCULATIONS

CCTV & WIRELESS RADIO = 0.6KVA x 1 = 0.6 KVA
SUMP PUMP (1/2HP) = 1.2KVA x 1 = 1.2 KVA
1.80 KVA
OR = 7.50 AMPS

PANEL 'N1'

3

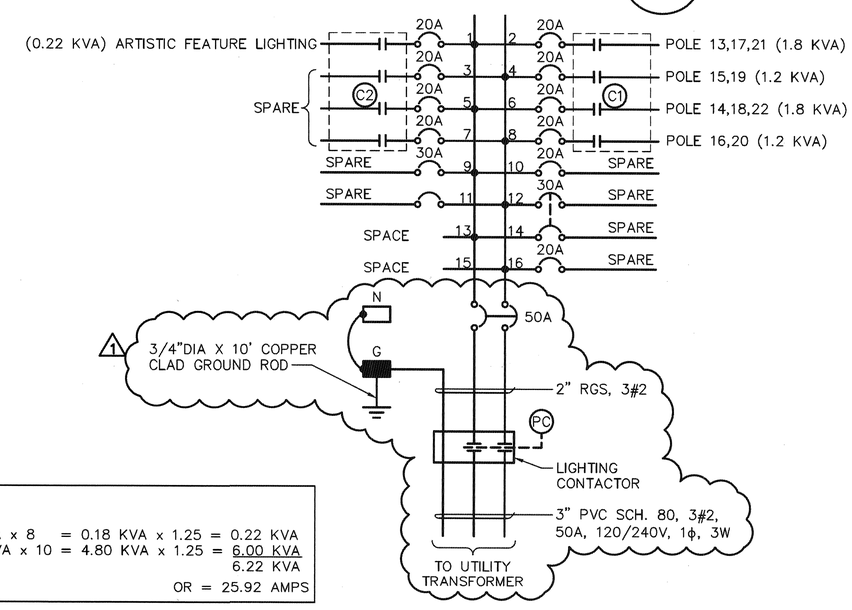

PANEL N2 LOAD CALCULATIONS

ARTISTIC FEATURE LIGHTING = 22VA x 8 = 0.18 KVA x 1.25 = 0.22 KVA
NORTH APPROACH LIGHTING = 480VA x 10 = 4.80 KVA x 1.25 = 6.00 KVA
6.22 KVA
OR = 25.92 AMPS

PANEL 'N2'

4

FIELD BOOK:				
SURVEYED:				
SURVEY BASE MAP:				
DESIGN ENTERED: L. BRAGG	6/2009			
DESIGNED L. BRAGG	6/2009			
CHECKED: P. FORDYCE	1/2010			
SUPERVISOR: P. FORDYCE	1/2010	1 ADDENDUM #2	LMB	02/23/11
		NUM. REVISION	BY	DATE

HNTB

FED. AID No. TIGERII–BRM–STPUL–1491(002)

PROJECT No. 300197

SURVEY No. 32–24–4–22

MAINTENANCE DIVISION No. 3

KING COUNTY DEPT. OF TRANSPORTATION
HAROLD TANIGUCHI, DIRECTOR

SOUTH PARK BRIDGE #3179 REPLACEMENT

ILLUMINATION PANEL SCHEDULES AND LOAD CALCULATIONS

King County

IL11

SHEET 133 OF 665 SHEETS

316-63

CONDUIT AND WIRE SCHEDULE

ID	CONDUIT SIZE	CONDUIT TYPE	ROUTING	WIRES QTY. & SIZE	WIRES TYPE	WIRES VOLTAGE	COMMENTS
1	2"	PVC SCH. 80	BURIED 24" UNDER GRADE	2#10, 1#10G	THWN	120V	SIDEWALK LIGHTING
2	2"	PVC SCH. 80	BURIED 24" UNDER GRADE	2#4, 2#10, 1#10G	THWN	120V	ROADWAY LIGHTING
3	2"	PVC SCH. 80	BURIED 18" UNDER SIDEWALK	3#6, 1#6G	THWN	120V	ROADWAY LIGHTING
				2#10	THWN	120V	ARTISTIC FEATURE LIGHTING
4	2"	RGS	EMBEDDED UNDER SIDEWALK	3#6, 1#6G	THWN	120V	ROADWAY LIGHTING
5	2"	RGS	EMBEDDED UNDER SIDEWALK	2#6, 1#6G	THWN	120V	ROADWAY LIGHTING
6	2"	RGS	EMBEDDED UNDER SIDEWALK	3#6, 1#6G	THWN	120V	ROADWAY LIGHTING
7	2"	PVC SCH. 80	BURIED 24" UNDER GRADE	2#4, 1#4G	THWN	120V	SUMP PUMP
8	2"	PVC SCH. 80	BURIED 18" UNDER SIDEWALK	–	–	–	SPARE (PROVIDE PULL CORD)
9	2"	RGS	EMBEDDED UNDER SIDEWALK	–	–	–	SPARE (PROVIDE PULL CORD)
10	2"	PVC SCH. 80	BURIED 36" UNDER ROADWAY	2#4, 1#4G	THWN	120V	SUMP PUMP
11	2"	RGS	BURIED 24" UNDER GRADE	–	–	–	SPARE (PROVIDE PULL CORD)
12	2"	RGS	EMBEDDED UNDER ROADWAY	–	–	–	SPARE (PROVIDE PULL CORD)
13	2"	PVC SCH. 80	BURIED 24" UNDER GRADE	2#6, 1#6G	THWN	120V	SUMP PUMP
14	1"	RGS	BURIED 24" UNDER GRADE	2#10, 1#10G	THWN	120V	CCTV CAMERA AND WIRELESS RADIO
15							NOT USED
16	2"	RGS	BURIED 24" UNDER GRADE	6#6, 1#6G	THWN	120V	ROADWAY LIGHTING
				2#6	THWN	120V	ARTISTIC FEATURE LIGHTING
1 17	3"	PVC SCH. 80	BURIED 24" UNDER GRADE	3#2	THWN	120/240V	PANEL 'S2' FEEDERS
18	2"	PVC SCH. 80	BURIED 24" UNDER GRADE	2#4, 1#4G	THWN	120V	SUMP PUMP
				2#8, 1#8G	THWN	120V	CCTV CAMERA AND WIRELESS RADIO
19	2"	RGS	EMBEDDED UNDER ROADWAY	3#6, 1#6G	THWN	120V	ROADWAY LIGHTING
				2#10	THWN	120V	ARTISTIC FEATURE LIGHTING
20	2"	RGS	BURIED 24" UNDER GRADE	6#6, 1#6G	THWN	120V	ROADWAY LIGHTING
				2#6	THWN	120V	ARTISTIC FEATURE LIGHTING
1 21	3"	PVC SCH. 40	IN DUCTBANK	3#2	THWN	120/240V	PANEL 'N2' FEEDERS
22	3"	PVC SCH. 80	BURIED 24" UNDER GRADE	3#4	THWN	120/240V	PANEL 'S1' FEEDERS
23	3"	PVC SCH. 80	BURIED 24" UNDER GRADE	3#2	THWN	120/240V	PANEL 'N2' FEEDERS
24	2"	RGS	EMBEDDED UNDER SIDEWALK	3#6, 1#6G	THWN	120V	ROADWAY LIGHTING
				2#10	THWN	120V	ARTISTIC FEATURE LIGHTING
25	2"	PVC SCH. 80	BURIED 18" UNDER SIDEWALK	2#6, 1#6G	THWN	120V	ROADWAY LIGHTING
				2#10	THWN	120V	ARTISTIC FEATURE LIGHTING
26	2"	RGS	EMBEDDED UNDER SIDEWALK	2#6, 1#6G	THWN	120V	ROADWAY LIGHTING
				2#10	THWN	120V	ARTISTIC FEATURE LIGHTING
27	2"	PVC SCH. 80	BURIED 36" UNDER ROADWAY	2#4, 1#4G	THWN	120V	SIDEWALK/UNDERPASS LIGHTING
28	2"	PVC SCH. 80	BURIED 24" UNDER GRADE	2#4, 1#4G	THWN	120V	SIDEWALK/UNDERPASS LIGHTING
29	1"	RGS	EMBEDDED UNDER SIDEWALK	2#10, 1#10G	THWN	120V	ROADWAY LIGHTING
30	2"	PVC SCH. 80	BURIED 24" UNDER GRADE	2#10, 1#10G	THWN	120V	ROADWAY LIGHTING
31	3"	PVC SCH. 40	IN DUCTBANK	3#4 1	THWN	120/240V	PANEL 'N1' FEEDERS
32	3"	PVC SCH. 80	BURIED 24" UNDER GRADE	3#4	THWN	120/240V	PANEL 'N1' FEEDERS
33	2"	PVC SCH. 80	BURIED 18" UNDER SIDEWALK	2#10, 1#10G	THWN	120V	ARTISTIC FEATURE LIGHTING

FIELD BOOK:		
SURVEYED:		
SURVEY BASE MAP:		
DESIGN ENTERED:	L. BRAGG	6/2009
DESIGNED	L. BRAGG	6/2009
CHECKED:	P. FORDYCE	1/2010
SUPERVISOR:	P. FORDYCE	1/2010

NUM.	REVISION	BY	DATE
1	ADDENDUM #2	LMB	02/23/11

PATRICIA L. FORDYCE — STATE OF WASHINGTON — 26932 — REGISTERED PROFESSIONAL ENGINEER — 2-23-11

HNTB

FED. AID No.
TIGERII–BRM–STPUL–1491(002)

PROJECT No. 300197
SURVEY No. 32–24–4–22

MAINTENANCE DIVISION No. 3

KING COUNTY DEPT. OF TRANSPORTATION
HAROLD TANIGUCHI, DIRECTOR

SOUTH PARK BRIDGE #3179 REPLACEMENT

ILLUMINATION
CONDUIT AND WIRE SCHEDULE

King County

IL12

SHEET 134 OF 665 SHEETS

316-63