REFERENCE

KING COUNTY, WASHINGTON
SURFACE WATER DESIGN MANUAL

Note:

Although some of the materials in this Reference section may have been adopted by administrative rule or by ordinance, the administrative rule that adopted the Surface Water Design Manual has not formally adopted any of the materials in this section. All of the papers, forms, notes, equations, symbols, maps and other materials herein are for reference only.

King County assumes no responsibility for the completeness or current status of the materials contained in this section. It is the sole responsibility of each applicant to insure that the most current materials are used in preparing a permit application for their proposed project. Copies of these materials are available from DNRP or DPER, or may be downloaded from the King County Water and Land Resources Division "Surface Water Design Manual Website."

1 KCC 9.04 – Surface Water Runoff Policy

2 Adopted Critical Drainage Areas

3 Other Adopted Area Specific Drainage Requirements

- A RA Zone Clearing Restrictions

4 Other Drainage Related Regulations and Guidelines

- A Grading Code Soil Amendment Standard
- B Clearing & Grading Seasonal Limitations
- C Landscape Management Plan Guidelines
- D Shared Facility Maintenance Responsibility Guidance

5 Wetland Hydrology Protection Guidelines

6 Hydrologic/Hydraulic Design Methods

- A Infiltration Rate Test Methods
- B Pond Geometry Equations
- C Introduction to Level Pool Routing
- D Supplemental Modeling Guidelines

7 Engineering Plan Support

- A King County Standard Map Symbols
- B Standard Plan Notes and Example Construction Sequence
- C Stormfilter Facility Access and Cartridge Configuration

8 Forms and Worksheets

- A Technical Information Report (TIR) Worksheet
- B Offsite Analysis Drainage System Table
- C Water Quality Facility Sizing Worksheets
- D Flow Control and Water Quality Facility Summary Sheet and Sketch
- E CSWPP Worksheet Forms
- F Adjustment Application Form and Process Guidelines
- G Dedication and Indemnification Clause - Final Recording
- H Bond Quantities Worksheet
- I Maintenance and Defect Agreement
- J Drainage Facility Covenant
- K Drainage Release Covenant
- L Drainage Easement
- M Flow Control BMP Covenant and BMP Maintenance Instructions (Recordable format)
- N Impervious Surface Limit Covenant
- O Clearing Limit Covenant
- P River Protection Easement
- Q Leachable Metals Covenant

9 Interim Changes to Requirements

- A Blanket Adjustments
- B Administrative Changes

10 King County-Identified Water Quality Problems

11 Materials

- A (VACANT)
- B (VACANT)
- C Bioretention Soil Media Standard Specifications
- D (VACANT)
- E Roofing Erodible or Leachable Materials

12 (VACANT)

13 (VACANT)

14 Supplemental Approved Facilities

- A Approved Proprietary Facilities
- B Approved Public Domain Facilities

KING COUNTY, WASHINGTON
SURFACE WATER DESIGN MANUAL

REFERENCE 1
SURFACE WATER RUNOFF POLICY

See King County Code, Section 9.04
http://www.kingcounty.gov/council/legislation/kc_code/12_Title_9.aspx

REFERENCE 2
ADOPTED CRITICAL DRAINAGE AREAS

(None at this time)

REFERENCE 3
OTHER ADOPTED AREA SPECIFIC DRAINAGE REQUIREMENTS

3-A RA ZONE CLEARING STANDARDS

See King County Code, Sections 16.82.150, 16.82.152, 16.82.154
http://www.kingcounty.gov/council/legislation/kc_code/19_Title_16.aspx

REFERENCE 4
OTHER DRAINAGE RELATED REGULATIONS AND GUIDELINES

4-A GRADING CODE SOIL AMENDMENT STANDARD

See King County Code, Section 16.82.100
http://www.kingcounty.gov/council/legislation/kc_code/19_Title_16.aspx

4-B CLEARING AND GRADING SEASONAL LIMITATIONS

See King County Code, Section 16.82.095
http://www.kingcounty.gov/council/legislation/kc_code/19_Title_16.aspx

4-C LANDSCAPE MANAGEMENT PLAN GUIDELINES

4-D SHARED FACILITY MAINTENANCE RESPONSIBILITY GUIDANCE

REFERENCE 4-C

LANDSCAPE MANAGEMENT PLAN GUIDELINES

Landscape management plans have the potential to significantly reduce the pollutant load washing off managed green spaces. For this reason, landscape management plans that incorporate key pollution prevention elements and which are consistently implemented can be used in lieu of water quality treatment facilities (see Section 1.2.8). These guidelines are intended to aid the preparation of comprehensive and effective landscape management plans. Submittal requirements for obtaining an approved landscape management plan are given in Chapter 2 and summarized below.

GENERAL CONSIDERATIONS

Studies of pollutant transport have consistently shown that forested lands consistently produce lower pollutant loads—of solids, phosphorus and metals—than do lands used for residential, industrial or agricultural purposes. "Loading" refers to the total weight of a pollutant leaving a particular area or site. It is measured by determining both the concentration of a pollutant and the amount of flow leaving a site. Since the Puget Sound area was largely forested before settlement, lakes and streams in the area have developed biotic regimes in response to this low pollutant loading—clear, cool waters supporting salmon and other aquatic life. When the input of pollutants increases, lakes and streams often shift to a more biologically productive mode, often with a concomitant loss of clear water and a shift or even a decline in fish species.

When forests are converted to cities, this increase in pollutant load needs to be managed in order to maintain the beneficial uses of lakes and streams. One way to manage pollutants is to treat stormwater before it enters a water body. Biofiltration swales, wetponds and sand filters, as well as other facilities, can be used to provide this treatment. Another approach to manage pollutant loads is to prevent the pollutants from entering stormwater in the first place.

Our best models on how to keep nutrients and pollutants from entering storm water are from the original, unaltered landscape—the forests. Forests have a soft, absorptive duff layer, as well as dense vegetative cover, especially near the ground surface. Nutrients are provided in the form of slow-release organic materials, or leaves, needles and woody material. Rainfall runoff is greatly reduced from the levels seen in developed landscapes. These factors help to keep the total load of nutrients and sediments transported to receiving waters low.

ELEMENTS OF A SUCCESSFUL LANDSCAPE MANAGEMENT PLAN

Good planning, tailored to the specific conditions of the site, as well as good follow-through, are both essential in controlling the pollutants generated when forests are replaced with lawns, gardens or other landscape features. This section will focus on planning. Follow-through, or implementation, will be discussed in the next section.

I. PLAN CONTENTS

A landscape management plan for any particular site works best if developed with the specific site characteristics in mind. Soil type, slope, exposure, depth to groundwater as well as the particular suite of plants chosen for the site all should help direct the specific make-up of the plan. However, there are some basic principles that all sites should consider in order to be successful in controlling the export of soil or organic matter, fertilizers and pesticides in stormwater runoff. Landscape management plans should address each of the following general principles, tailoring them to fit the specific site situation:

1) Minimize bare soil areas

2) Reduce water demand
3) Reduce extent of turf area—manage remaining turf for low-impact
4) Choose plants with sustainability in mind
5) Manage fertilizer and pesticide use wisely

Each of the five basic principles is expanded upon in the following section. The recommendations discussed under each principle are intended as a framework for a variety of site situations, from individual homes to large parks and golf courses. Thus, not every landscape management plan may be able to apply each of the listed recommendations. In addition, landscapes are managed for different purposes, some more formal than others. It may be that some recommendations will not be appropriate for very formal sites and thus not adopted, in favor of other management practices that better fit the uses for which the site is intended. In the end, the extent to which a landscape management plan is successful depends on the ability of the practices chosen to retain soil, fertilizers and pesticides on the site and away from water resources throughout the entire year.

Principle 1 Minimize bare soil areas

Bare soil areas are one source of solids that can be mobilized and carried downstream by rainfall. Minimizing bare soil areas makes it less likely that solid particles will be dislodged by rainfall. Some pointers on how to manage landscapes to minimize bare soil are given below.

a) Establish dense plantings of pest-resistant groundcover to shade out weeds. Some easy-care recommendations are rock rose (*Cistus* sp.), snowberry (*Symphoricarpus alba*), salal (*Gaultheria shallon*) and kinnickinick (*Arctostaphylos uva-ursi*).

b) If bare soil areas are required, as in plant beds or ball diamonds, surround the bare area with an area of grass or groundcover to filter out solids that may be picked up by stormwater runoff.

- The denser the grass or groundcover, the better it works to capture solids in runoff.
- Try to make the filtering area as level as possible. Avoid low spots, where runoff can concentrate and create channels.
- In general, filter areas should be about one-fourth as long (along the flow path) as the area contributing low, assuming that slopes are gentle (less than about 10 percent). For flat, level areas without dips, this length can be reduced.

c) Repair promptly bare patches in lawns or groundcovers that could contribute solids to stormwater runoff.

d) Don’t place bark or loose mulch on slopes where it can be carried to stormdrains.

Principle 2 Reduce water demand

Reducing the need for irrigation reduces the potential movement of pollutants, conserves water and saves money.

a) Use drought tolerant or native vegetation.

b) Install underground irrigation systems timed to water at night or drip irrigation systems.

c) Increase the organic content of soils to improve water-retention capability.

d) Allow for longer water retention by terracing sloped areas.

Principle 3 Reduce turf area and manage remaining turf for low-impact

Turf requires care to look good. In addition to mowing, turf areas typically require water, fertilizer and weed and disease control. However, some practices can reduce or minimize the amount of chemical controls needed.

a) Amend soil with organic matter to a depth of 8 -12 inches before the lawn is established. Till the organic matter into the native soil.

b) Decide if all lawn area needs the same level of upkeep: let some areas have a less formal look if possible, and reduce fertilizer and pesticide use in those areas.

c) Rely on irrigation and lawn aeration as the primary tools to maintain healthy turf.

d) Remove thatch each year to increase water penetration to grass roots and reduce runoff.

e) Plant groundcovers rather than grass in shady areas. Turf grasses usually need at least partial sun to remain vigorous.

Principle 4 Choose plants with sustainability in mind

Plants differ in their ability to cope with different soils, rainfall conditions, pest and diseases and microclimates. Choosing resilient plant species, plants with adaptations for particular environments or creating optimal microenvironments are all techniques that can be used to create landscapes that require less intervention. Less watering and less need for pesticide and fertilizer application means less potential for pollutants to leave the site.

a) Choose disease resistant plants.

b) Choose drought-resistant groundcovers, shrubs and trees in areas with poor soil or little shading.

c) Group plants in clusters with tree, shrub and groundcover layers to create a better micro-environment and to supply organic matter back to the soil.

d) Include plants in the landscape that are important for beneficial insects such as parasitic wasps. If beneficial insects have nothing to sustain them, they won't stick around to control pests when you need them.

e) Use dense plantings or close spacing to shade out weeds rather than herbicides.

f) Use plants with fibrous roots on steeper slopes or erosion-prone areas. [1] Some good choices include:

- *New Zealand flax (*Phormium penax*)
- Ornamental grasses, lawn grasses
- *Rock rose (*Cistus* sp.)
- Rosa rugosa
- Salmonberry (*Rubus spectabilis*) -- native
- Snowberry (*Symphoricarpus alba*)-- native

  * not hardy in all areas of the County

g) Use wetland plants in areas with seeps or a high water table.

h) Attend to installation details. Write enforceable planting specifications that include details such as soil preparation, plant spacing, plant condition and size, planting depth, transplant handling and

[1] Note that the County's Sensitive Areas Code (21a) defines and protects steep slopes and landslide hazard areas from encroachment. Generally, clearing of vegetation is prohibited in areas with slopes of 40% or more.

irrigation. Inspect the job during planting to prevent short cuts such as blowing the soil mixture around root balls rather than digging the roots into amended native soils.

Principle 5 Manage fertilizer and pesticide use wisely

Many landscape plants and turf simply won't do well without fertilization and some amount of pest management. It's therefore important for landscape management plans to address when and how these actions will be taken.

a) Keep plants healthy by building healthy soil using composted organic material. Healthy plants can better resist diseases and insect pests.

b) Tailor fertilizer make-up to lawn needs. Adjust application rate and timing of fertilizer applications to avoid carry-off in storm runoff.

c) Reduce the phosphorus (P) concentration in fertilizers when possible by using a low phosphorous formulation or formulations containing only nitrogen or potassium. Added phosphorus is often not needed for health foliage growth, only for encouraging profuse blooms.

d) Use an integrated pest management approach to control pests. Keep current about non-chemical controls as a first-defense against pests.

e) Encourage a diverse insect community in your landscape: Beneficial insects can help control pests, especially pests of trees and shrubs.

f) Target pesticide application to the specific pest of concern. Avoid pesticide "mixes" targeting generic problems (such as weed and feed) unless you actually need each of the formulations for a current problem.

g) Only apply pesticides during the life-stage when the pest is vulnerable.

h) Use fungicides very sparingly—they disrupt the base of aquatic food webs. If you need to use fungicides, spray formulations with faster break-down times. Consult a golf course management text for information on the attributes of various fungicides (and other pesticides). Balough and Walker, 1992, *Golf course management and construction* published by CRC Press is one source of information.

i) Tolerate some weeds.

References

"Weed management for lawns and gardens." Washington Toxics Coalition Fact Sheet, 1989.

"Least toxic lawn management." The BioIntegral Resource Center (BIRC), P.O. Box 7414, Berkeley, CA 94707

Washington State Cooperative Extension publications on lawn care, Bulletin Office, Cooperative Extension, Cooper Publication Building, Washington State University, Pullman, WA 99164-5912

Selected tittles include: "Turf grass diseases" and supplement (EB0713 and EB0713S); "European crane fly"(EB0856); "Fertilizer guide: western Washington" (FG0041); "Disease control in home lawns" (EB0938); "Home lawns" (EB0482).

II PLAN IMPLEMENTATION

A landscape management plan, no matter how good, will not reduce pollutants in runoff if it is not implemented. And implementation often means that the plan needs to be modified over time, since as plants grow and as the cycle of pests change, the original plan may not fit the site. The following must be addressed before a landscape management plan can be approved.

1. Identify who will be responsible for assuring the management plan is carried out.

2. Identify how the applicant will assure that grounds crews or homeowners have the training and/or resources required to implement the plan and keep up to date on advances in landscape care practices and products.
3. Agree to keep records of fertilizer and pesticide application, including rate of application, area treated and disposal or storage of residue.
4. Agree to certify each year that the landscape management plan for the project in question has been carried out, and that needed amendments or updates have been made.
5. Provide the plan to County maintenance or inspection personnel on request
6. Agree to pay an annual fee (based on time expended) to allow the County to administer the certification process, including review of plans, tracking of information, periodic field inspections and sampling.

III SUBMITTAL REQUIREMENTS (see SWDM Section 2.3.1.5)

To evaluate a Landscape Management Plan submittal, the following elements are required:

1. Provide a ***site*** **vicinity map** with topography.
2. Provide a **site plan** with topography. Indicate areas with saturated soils or high water tables.
3. Provide a **plant list** (provide both common and scientific names) that includes the following information:
   a) Indicate any drought-tolerant plants, disease resistant varieties, species for attracting beneficial insects (if any) and native plants.
   b) For shrubs and groundcovers, indicate the proposed spacing.
   c) For turf areas, indicate the grass mix or mixes planned. Indicate sun/shade tolerance, disease susceptibility, drought tolerance and tolerance of wet soil conditions.
4. Provide a **landscape plan**. Indicate placement of landscape features, lawn areas, trees, and planting groups (forbes, herbs, groundcovers, etc.) on the ***site***.
5. Include information on **soil preparation** and fertility requirements.
6. Provide information on the design of the **irrigation method** (installed sprinkler system, drip irrigation system, manual, etc.)
7. Provide a **landscape maintenance plan**, including the following:
   a) Physical care methods, such as thatch removal or aeration, and mowing height and frequency
   b) Type of fertilizer (including N-P-K strength) and fertilization schedule or criteria
   c) Type of chemicals to be used for common pests such as crane fly larvae, and the criteria or schedule for application
   d) Any biocontrol methods.
8. Provide information about the **storage of pesticides or other chemicals**, and **disposal measures** that will be used.
   a) If applicable, indicate how the chemicals will be stored on the ***site*** between applications to prevent contact with stormwater or spills into the storm drainage system.
   b) Indicate how excess quantities of fertilizers or chemicals will be handled for individual applications.
9. Provide an **implementation plan** (see Section II, Plan Implementation, above) for guidance on preparing the implementation plan).

REFERENCE 4-D

SHARED DRAINAGE FACILITY MAINTENANCE RESPONSIBILITY GUIDELINES

Shared facilities are flow control, conveyance, and/or water quality facilities designed and constructed in accordance with the provisions contained in the 2005 Surface Water Design Manual (SWDM) or later and which serve more than one project. By this we mean that the facility serves more than one residential subdivision, or may serve a combination of residential, commercial and public projects.

Shared facility policies are contained in the SWDM and K.C.C. 9.04.050. Core Requirement #6 states that "King County may assume maintenance of such facilities serving any mix of developments as part of a shared facilities plan."

Shared facilities must have a plan or agreement which is reviewed and approved by King County. The plan may be developed through the Master Drainage Plan process, or through the plat screening or commercial permit process. WLRD assists in the review of shared facility proposals within the existing support framework in the Adjustment and MDP programs, particularly regarding maintenance issues.

Guidelines for assigning maintenance responsibility

1. Shared facilities that serve only single-family residential projects (more than one subdivision) will be maintained by King County.
2. Shared facilities that serve a combination of residential and commercial projects where more than two-thirds of the developed contributing area served is a mix of single or duplex residential units on individual lots and any public improvements will be maintained by KC.
3. Shared facilities that serve a mix of single family residential, public, and commercial projects where a single commercial project is more than one third of the developed contributing area served will be maintained by the property owner of the single commercial project. The facilities must be located on the commercial property responsible for maintenance or within a tract or easement dedicated to the commercial property responsible for maintenance.
4. If there are two commercial projects which individually are more than one third of the developed contributing area served, the shared facility will be jointly maintained by the two commercial property owners. The facility must be located on one or both of the commercial properties responsible for maintenance or within a tract or easement dedicated to the commercial properties responsible for maintenance.
5. Shared facilities that serve commercial subdivision projects in which no single contributing parcel area is more than one third of the total contributing area served may be maintained by KC. The actual situation should be reviewed by WLRD as part of the shared facility plan review process to determine whether the facility should be maintained by KC.
6. King County may elect to maintain shared facilities where there are unusual circumstances such as where shared facilities are located off and not adjacent to the sites they serve.

(This page intentionally left blank)

KING COUNTY, WASHINGTON
SURFACE WATER DESIGN MANUAL

REFERENCE 5

WETLAND HYDROLOGY PROTECTION GUIDELINES

- ECOLOGY Guide Sheets 1 and 2: Stormwater Wetland Assessment Criteria
- ECOLOGY Guide Sheets 3a, 3b and 3c: Wetland Protection Guidelines (Volumetric Analysis)
- KING COUNTY ALTERNATIVE Guidelines for Protection from Adverse Impacts of Modified Runoff Quantity Discharged to Wetlands (Water Level Fluctuation Analysis)

REFERENCE 5

WETLAND HYDROLOGY PROTECTION GUIDELINES

These criteria and guidelines shall be applied when considering natural wetlands for structural or hydrologic modification for runoff quantity/quality control, or for impacts from upstream development.

Guide Sheets 1 and 2 and *Information Needed to Apply the Guidelines*, provided by WA Ecology and included here, describe criteria that would disqualify a natural wetland for modification, and conditions and limitations for those that would qualify for modification. *Guide Sheets 3a, 3b and 3c*, also provided by Ecology, describe methodology for a runoff volume analysis approach. The alternative approach, which appeared in the 2009 edition of the King County *Surface Water Design Manual* and is continued in this edition, describes the methodology for analysis based on water level fluctuations.

The selection of the appropriate approach to use will be determined on a case-by-case basis by King County DPER review staff.

INFORMATION NEEDED TO APPLY THE GUIDELINES

Excerpted from Ecology's Stormwater Management Manual for Western Washington 2014, Volume I – Minimum Technical Requirements, p.D-15.

Each guide sheet requires collecting specific information. The following sections list the basic data needed for applying the Guide Sheets. As a start, obtain the relevant soil survey; the National Wetland Inventory for the watershed, topographic and land use maps, and the results of any local wetland inventory.

Data Needed for Guide Sheet 1: Criteria for Excluding Wetlands as Part of a Stormwater System

1. Wetland category Ecology's "Washington State Wetland Rating System for Western Washington," available on-line at http://www.ecy.wa.gov/programs/sea/wetlands/ratingsystems/index.html .
2. Rare, threatened, or endangered species inhabiting the wetland.
3. Presence or absence of a breeding population of native amphibians. If amphibians are found in the wetland assume they are native unless you can demonstrate the only species present are non-native.

Data Needed for Guide Sheet 2: Criteria for Including Wetlands as Part of a Stormwater System

1. Hydrologic modeling of the existing flows and predicted flows into the wetland.
2. A characterization of the changes to water quality coming into the wetland from the development.
3. Presence of breeding populations of native amphibian species.
4. Presence of fish species.

Data Needed for Guide Sheet 3B: Protecting wetlands from impacts of changes in water flows

The WWHM user manual will have a modeling procedure for estimating water flows to wetlands[1]. Follow the modeling procedure in WWHM user manual to estimate flows and determine compliance with the wetland Criteria 1 and 2. The information needed to model water flows to a wetland in WWHM includes the following:

1. Location of the development project
2. Land use characteristics before and after development.
   a) Soil Type
   b) Surface Vegetation
   c) Land slope
   d) Land area (acres)
3. Land use characteristics between the development project area and the wetland.

[1] Refer to MGS Flood user's guide for modeling procedure with the MGS Flood software program

GUIDE SHEETS 1 AND 2: STORMWATER WETLAND ASSESSMENT CRITERIA

Excerpted from Ecology's Stormwater Management Manual for Western Washington 2014, Volume I – Minimum Technical Requirements, pp.D3-D4

Guide Sheet 1: Criteria that excludes wetlands from serving as a treatment or flow control BMP/facility

The following types of wetlands are not suitable as a treatment or flow control BMPs/facilities. Engineering structural or hydrologic changes within the wetland itself to improve stormwater flows and water quality are not allowed. Do not increase or decrease the water regime in these wetlands beyond the limits set in Guide Sheet 3. Provide these wetlands with the maximum protection from urban impacts (see Guide Sheet 3, Wetland Protection Guidelines):

1. The wetland is currently a Category I wetland because of special conditions (forested, bog, estuarine, Natural Heritage, coastal lagoon).
2. The wetland provides a high level of many functions. These are Category I and II wetlands as determined by the Washington State Wetland Rating System of Western Washington.
3. The wetland provides habitat for threatened or endangered species. Determining whether or not the conserved species will be affected by the proposed project requires a careful analysis in relation to the anticipated habitat changes. Consult with the appropriate agencies with jurisdiction over the specific threatened or endangered species on the site.

If a wetland type listed above needs to be included in a stormwater system then this activity is considered an impact. It will be treated as any other impact, and will need to be mitigated according to the rules for wetland mitigation. Project proponents will have to demonstrate that they have done everything to avoid and minimize impacts before proceeding to compensatory mitigation.

The wetlands listed above cannot receive flows from a stormwater system unless the criteria in Guide Sheets 3B and 3C are met.

Guide Sheet 2: Criteria for including wetlands as a treatment or flow control BMP/facility

A wetland can be physically or hydrologically altered to meet the requirements of a treatment or flow control BMP/facility if ALL of the following criteria are met:

Modifications that alter the structure of a wetland or its soils will require permits. Existing functions and values that are lost would have to be compensated/replaced.

1. It is classified in Category IV in the "Washington State Wetland Rating System of Western Washington," or a Category III wetland with a habitat score of 19 points or less.
2. You can demonstrate that there will be "no net loss" of functions and values of the wetland as a result of the structural or hydrologic modifications done to provide control of runoff and water quality. This includes the impacts from the machinery used for the construction. Heavy equipment can often damage the soil structure of a wetland. However, the functions and values of degraded wetlands may sometimes be increased by such alterations and thus would be self-mitigating. Functions and values that are not replaced on site will have to be mitigated elsewhere.
   a. Modifications that alter the structure of a wetland or its soils will require permits. Check with the agency(ies) issuing the permits for the modification(s) to determine which method to use to establish "no net loss."
   b. A wetland will usually sustain fewer impacts if the required storage capacity can be met through a modification of the outlet rather than through raising the existing overflow.
3. The wetland does not contain a breeding population of any native amphibian species.

4. The hydrologic functions of the wetland can be improved as outlined in questions 3, 4, and 5 of Chart 4 and questions 2, 3, and 4 of Chart 5 in the "Guide for Selecting Mitigation Sites Using a Watershed Approach," (available here: http://www.ecy.wa.gov/biblio/0906032.html); or the wetland is part of a priority restoration plan that achieves restoration goals identified in a Shoreline Master Program or other local or regional watershed plan.
5. The wetland lies in the natural routing of the runoff, and the discharge follows the natural routing.

GUIDE SHEET 3: WETLAND PROTECTION GUIDELINES (VOLUMETRIC ANALYSIS)

Excerpted from Ecology's Stormwater Management Manual for Western Washington 2014, Volume I – Minimum Technical Requirements pp.D4-D9

This guide sheet provides information on ways to protect wetlands from changes to their ecological structure and functions that result from human alterations of the landscape. It also recommends management actions that can avoid or minimize deleterious changes to wetlands.

Although, this guide sheet is intended primarily for the protection of the wetlands listed in Guide Sheet 1; this guidance still should be applied, as practical, for wetlands listed in Guide Sheet 2 when they are modified to meet stormwater requirements.

Guide Sheet 3A: General guidelines for protecting functions and values of wetlands

1. Consult regulations issued under federal and state laws that govern the discharge of pollutants. Wetlands are classified as "Waters of the United States" and "Waters of the State" in Washington.
2. Maintain the wetland buffer required by local regulations.
3. Retain areas of native vegetation connecting the wetland and its buffer with nearby wetlands and other contiguous areas of native vegetation.
4. Avoid compaction of soil and introduction of exotic plant species during any work in a wetland.
5. Take measures to avoid general urban impacts (e. g., littering and vegetation destruction). Examples are protecting existing buffer zones; discouraging access, especially by vehicles, by plantings outside the wetland; and encouragement of stewardship by a homeowners' association.
6. Fences can be useful to restrict dogs and pedestrian access, but they also interfere with wildlife movements. Their use should be very carefully evaluated on the basis of the relative importance of intrusive impacts versus wildlife presence. Fences should generally not be installed when wildlife would be restricted and intrusion is relatively minor. They generally should be used when wildlife passage is not a major issue and the potential for intrusive impacts is high. When wildlife movements and intrusion are both issues, the circumstances will have to be weighed to make a decision about fencing.
7. If the wetland inlet will be modified for the stormwater management project, use a diffuse flow method (e.g. a level spreader swale per SWDM Section 6.2.6, or downspout dispersion systems per SWDM Appendix C, Section C.2.1) to discharge water into the wetland in order to prevent flow channelization.

Guide Sheet 3B: Protecting wetlands from impacts of changes in water flows

Protecting wetland plant and animal communities depends on maintaining the existing wetland's hydroperiod. This means maintaining the annual fluctuations in water depth and its timing as closely as possible. The risk of impacts to functions and values increases as the changes in water regime deviate more from the existing conditions. These changes often result from development.

Hydrologic modeling is useful to measure or estimate the aspects of the hydroperiod under existing pre-project and anticipated post-project conditions. Post-project estimates of the water regime in a watershed and wetland hydroperiod must include the cumulative effect of all anticipated watershed and wetland modifications. Perform this assessment with the aid of a qualified hydrologist.

Provisions in these guidelines pertain to the full anticipated build-out of the wetland's watershed as well as changes resulting from an individual development.

Unfortunately, attempts to modify and use the standard hydrologic models for describing the flow and fluctuations of water in a stormwater pond have failed to adequately model the hydrodynamics in

wetlands. It is difficult, to estimate if stormwater discharges to a wetland will meet the criteria for protection developed by the Puget Sound Wetland and Stormwater Research Program. The criteria developed by that program apply only to depressional wetlands. They are not applicable to riverine, slope, or lake-fringe wetlands. Ecology does not have any hydrologic models available to characterize the hydrodynamics in these types of wetlands.

As a result, it is difficult to predict the direct impacts of changes in water flows resulting from a development. In the absence of hydrologic models that characterize all types of wetlands, criteria have to be set using information that is readily available. These criteria are based on risk to the resource rather than an actual understanding of impacts.

The following criteria will provide some protection for the valuable wetland types listed in Guide Sheet 1, but we cannot determine if they result in the complete protection of a wetland's functions and values. The risk to wetland functions will increase as the water volumes into the wetland diverge from the pre-project conditions. The risk will be decreased if the divergence is smaller.

Use the Western Washington Hydrology Model (WWHM), or other models approved by Ecology, for estimating the increases or decreases in total flows (volume) into a wetland that can result from the development project. These total flows can be modeled for individual days or on a monthly basis. Compare the results from this modeling to the criterion below. WWHM 2012 will have the capability to compare these results with the criterion.

***Criterion 1*: total volume of water into a wetland during a single precipitation event should not be more than 20% higher or lower than the pre-project volumes.**

Modeling algorithm for Criterion 1

1. Daily Volumes can be calculated for each day over 50 years for Pre- and Post-project scenarios. Volumes are to be calculated at the inflow to the wetland or the upslope edge where surface runoff, interflow, and groundwater are assumed to enter.
2. Calculate the average of Daily Volume for each day for Pre- and Post-project scenarios. There will be 365 values for the Pre-project scenario and 365 for the Post-project.

   Example calculation for each day in a year (e.g., April 1):

   - If you use 50 years of precipitation data, there will be 50 values for April 1. Calculate the average of the 50, April 1, Daily Volumes for Pre- and Post-project scenarios.
   - Compare the average Daily Volumes for Pre- versus Post-project scenarios for each day. The average Post-project Daily Volume for April 1 must be within +/- 20% of the Pre-project Daily Volume for April 1.
3. Check compliance with the 20% criterion for each day of year. Criterion 1 is met/passed if none of the 365 post-project daily volumes varies by more than 20% from the pre-project daily volume for that day.

***Criterion 2*: Total volume of water into a wetland on a monthly basis should not be more than 15% higher or lower than the pre-project volumes.** This needs to be calculated based on the average precipitation for each month of the year. This criterion is especially important for the summer months when a development may reduce the monthly flows rather than increase them because of reduced infiltration and recharging of ground water.

Modeling algorithm for Criterion 2

1. Monthly Volumes can be calculated for each calendar month over 50 years for Pre- and Post-project scenarios. Volumes are to be calculated at the inflow to the wetland or the upslope edge where surface runoff, interflow, and groundwater are assumed to enter.

2. Calculate the average of Monthly Volume for each calendar month for Pre- and Post-project scenarios.

   Example calculation for each calendar month in a year (e.g., April):

   - If you use 50 years of precipitation data, there will be 50 values for the month of April. Calculate the average of the 50, April, Monthly Volumes for Pre- and Post-project scenarios.
   - Compare the Monthly Volumes for Pre- versus Post-project scenarios. Post- project Monthly Volume for April must be within +/- 15% of the Pre- project Monthly Volume for April.

3. Check compliance with the 15% criterion for each calendar month of year. Criterion 2 is met/passed if none of the post-project Monthly Volume varies by more than 15% from the pre-project Monthly Volume for every month.

WWHM Modeling Assumption and Approach

Assumption - Flow components feeding the wetland under both Pre- and Post-project scenarios are assumed to be the sum of the surface, interflow, and ground water flows from the project site.

Approach - Assign the wetland a point of compliance #1 (POC) number such as POC1 downstream of the project area.

• ***Pre-project scenario*** - Connect all flow components to the wetland/POC1

➢ **Pre-project Total Flows to POC1 = Surface + Interflow + Ground water**

• ***Post-project scenario*** - Identify flows to the wetland/POC1.

a) Impervious surfaces send flows to wetland via (1) surface flow.

✓ WWHM sub-flows to POC1 = Surface flow (+ Interflow default set in WWHM)

b) Pervious surfaces send flows to wetland via (1) surface, (2) interflow, and (3) ground.

✓ WWHM sub-flows to POC1 = Surface + Interflow + Groundwater

c) Infiltrating facilities send flows to wetland via groundwater and surface overflows.

(1) Groundwater - Connect infiltrated water (Outlet 2) to groundwater component of the area between facility and wetland. Use Lateral Basin downstream of the infiltrating facility and connect Outlet 2 to the groundwater component of the Lateral Basin. If this area is the same area modeled in Step (b) above, use the Lateral Basin element in Step (b).

✓ WWHM sub-flows to POC1 = infiltrated flows

(2) Surface Overflow – Connect the surface flow (Outlet 1) to wetland/POC1

✓ WWHM sub-flows to POC1 = facility surface flows (Outlet 1)

➢ **Post-project Total Flows to POC1 = Sum of flows in (a), (b), and (c).**

If it is expected that the limits stated above could be exceeded, consider the following strategies to reduce the volume of surface flows:

- Reducing of the level of development by reducing the amount of impervious surface and/or increasing the retention of natural forest cover.
- Increasing infiltration through the use of LID BMPs and LID principles.
- Increasing storage capacity for surface runoff.
- Using selective runoff bypass around the wetland. Bypassed flow must still comply with other applicable stormwater requirements.

Monitoring – Modifications that alter the structure of a wetland or its soils will require permits. Conduct monitoring as required by local, state, or federal permits.

Guide Sheet 3C: Guidelines for protecting wetlands from pollutants

Protecting a wetland from pollutants generated by a development should include the following measures:

1. Use effective erosion control at construction sites in the wetland's drainage catchment. Refer to *SWDM Appendix D*.
2. Institute a program of source control BMPs and minimize the pollutants that will enter storm runoff that drains to the wetland.
3. For wetlands the meet the criteria in Guide Sheet 1, provide a water quality facility to treat runoff entering the wetland.

If the wetland is a Category I wetland because of special conditions (forested, bog, estuarine, Natural Heritage, costal lagoon), the facility should include advanced ability to control nutrients.

GUIDELINES FOR PROTECTION FROM ADVERSE IMPACTS OF MODIFIED RUNOFF QUANTITY DISCHARGED TO WETLANDS[2] (WATER LEVEL FLUCTUATION ANALYSIS)

1. Protection of wetland plant and animal communities depends on controlling the wetland's **hydroperiod**, meaning the pattern of fluctuation of water depth and the frequency and duration of exceeding certain levels, including the length and onset of drying in the summer. A hydrologic assessment is useful to measure or estimate elements of the hydroperiod under existing **pre-development** and anticipated **postdevelopment** conditions. This assessment should be performed with the aid of a qualified hydrologist. Post-development estimates of watershed hydrology and wetland hydroperiod must include the cumulative effect of all anticipated watershed and wetland modifications. Provisions in these guidelines pertain to the full anticipated build-out of the wetland's watershed.

   This analysis hypothesizes a fluctuating water stage over time before development that could fluctuate more, both higher and lower after development; these greater fluctuations are termed **stage excursions**. The guidelines set limits on the frequency and duration of excursions, as well as on overall water level fluctuation, after development. To determine existing hydroperiod use one of the following methods, listed in order of preference:

   - *Estimation by a continuous simulation computer model* —The model should be calibrated with at least one year of data taken using a continuously recording level gage under existing conditions and should be run for the historical rainfall period. The resulting data can be used to express the magnitudes of depth fluctuation, as well as the frequencies and durations of surpassing given depths. [Note: Modeling that yields high quality information of the type needed for wetland hydroperiod analysis is a complex subject. Providing guidance on selecting and applying modeling options is beyond the scope of these guidelines but is being developed by King County Surface Water Management Division and other local jurisdictions. An alternative possibility to modeling depths, frequencies, and durations within the wetland is to model durations above given discharge levels entering the wetland over various time periods (e. g., seasonal, monthly, weekly). This option requires further development.]

   - *Measurement during a series of time intervals* (no longer than one month in length) over a period of at least one year of the maximum water stage, using a crest stage gage, and instantaneous water stage, using a staff gage--The resulting data can be used to express water level fluctuation (WLF) during the interval as follows:

     Average base stage = (Instantaneous stage at beginning of interval + Instantaneous stage at end of interval)/2

     WLF = Crest stage - Average base stage

   Compute mean annual and mean monthly WLF as the arithmetic averages for each year and month for which data are available.

To forecast future hydroperiod use one of the following methods, listed in order of preference:

- *Estimation by the continuous simulation computer model calibrated during pre-development analysis and run for the historical rainfall period* — The resulting data can be used to express the magnitudes of depth fluctuation, as well as the frequencies and durations of surpassing given depths. [Note: Post-development modeling results should generally be compared with

[2] Excerpted from 2001 WA Ecology *Stormwater Manual for Western Washington (SWMMWW), Guide Sheet 2B: Guidelines for Protection from Adverse Impacts of Modified Runoff Quantity Discharged to Wetlands*, These guidelines are replaced by *Guide Sheet 3* in WA Ecology's 2014 edition of the *SWMMWW*, but are retained for the King County *Surface Water Design Manua*l as an appropriate and possibly more stringent alternative for achieving wetland protection goals.

predevelopment modeling results, rather than directly with field measurements, because different sets of assumptions underlie modeling and monitoring. Making pre- and post-development comparisons on the basis of common assumptions allows cancellation of errors inherent in the assumptions.]

- *Estimation according to general relationships developed from the Puget Sound Wetlands and Stormwater Management Program Research Program*, as follows (in part adapted from Chin 1996):
  - Mean annual WLF is very likely (100% of cases measured) to be < 20 cm (8 inches or 0.7 ft) if total impervious area (TIA) cover in the watershed is < 6% (roughly corresponding to no more than 15% of the watershed converted to urban land use).
  - Mean annual WLF is very likely (89% of cases measured) to be > 20 cm if TIA in the watershed is > 21% (roughly corresponding to more than 30% of the watershed converted to urban land use).
  - Mean annual WLF is somewhat likely (50% of cases measured) to be > 30 cm (1.0 ft) if TIA in the watershed is > 21% (roughly corresponding to more than 30% of the watershed converted to urban land use).
  - Mean annual WLF is likely (75% of cases measured) to be > 30 cm, and somewhat likely (50% of cases measured) to be 50 cm (20 inches or 1.6 ft) or higher, if TIA in the watershed is > 40% (roughly corresponding to more than 70% of the watershed converted to urban land use).
  - The frequency of stage excursions greater than 15 cm (6 inches or 0.5 ft) above or below pre-development levels is somewhat likely (54% of cases measured) to be more than six per year if the mean annual WLF increases to > 24 cm (9.5 inches or 0.8 ft).
  - The average duration of stage excursions greater than 15 cm above or below pre-development levels is likely (69% of cases measured) to be more than 72 hours if the mean annual WLF increases to > 20 cm.

2. The following hydroperiod limits characterize wetlands with relatively high vegetation species richness and apply to all zones within all wetlands over the entire year. If these limits are exceeded, then species richness is likely to decline. If the analysis described above forecasts exceedences, one or more of the management strategies listed in step 5 should be employed to attempt to stay within the limits.
   - Mean annual WLF (and mean monthly WLF for every month of the year) does not exceed 20 cm. Vegetation species richness decrease is likely with: (1) a mean annual (and mean monthly) WLF increase of more than 5 cm (2 inches or 0.16 ft) if predevelopment mean annual (and mean monthly) WLF is greater than 15 cm, or (2) a mean annual (and mean monthly) WLF increase to 20 cm or more if pre-development mean annual (and mean monthly) WLF is 15 cm or less.
   - The frequency of stage excursions of 15 cm above or below predevelopment stage does not exceed an annual average of six. Note: A short-term lagging or advancement of the continuous record of water levels is acceptable. The 15 cm limit applies to the temporary increase in maximum water surface elevations (hydrograph peaks) after storm events and the maximum decrease in water surface elevations (hydrograph valley bottoms) between events and during the dry season.
   - The duration of stage excursions of 15 cm above or below predevelopment stage does not exceed 72 hours per excursion.
   - The total dry period (when pools dry down to the soil surface everywhere in the wetland) does not increase or decrease by more than two weeks in any year.
   - Alterations to watershed and wetland hydrology that may cause perennial wetlands to become vernal are avoided.

3. The following hydroperiod limit characterizes priority peat wetlands (bogs and fens as more specifically defined by the Washington Department of Ecology) and applies to all zones over the entire year. If this limit is exceeded, then characteristic bog or fen wetland vegetation is likely to decline. If the analysis described above forecasts exceedence, one or more of the management strategies listed in step 5 should be employed to attempt to stay within the limit.
   - The duration of stage excursions above the predevelopment stage does not exceed 24 hours in any year.
   - Note: To apply this guideline a continuous simulation computer model needs to be employed. The model should be calibrated with data taken under existing conditions at the wetland being analyzed and then used to forecast post- development duration of excursions.
4. The following hydroperiod limits characterize wetlands inhabited by breeding native amphibians and apply to breeding zones during the period 1 February through 31 May. If these limits are exceeded, then amphibian breeding success is likely to decline. If the analysis described above forecasts exceedences, one or more of the management strategies listed in step 5 should be employed to attempt to stay within the limits.
   - The magnitude of stage excursions above or below the pre-development stage does not exceed 8 cm, and the total duration of these excursions does not exceed 24 hours in any 30 day period.
   - Note: To apply this guideline a continuous simulation computer model needs to be employed. The model should be calibrated with data taken under existing conditions at the wetland being analyzed and then used to forecast post-development magnitude and duration of excursions.
5. If it is expected that the hydroperiod limits stated above could be exceeded, consider strategies such as:
   - Reduction of the level of development;
   - Increasing runoff infiltration [Note: Infiltration is prone to failure in many Puget Sound Basin locations with glacial till soils and generally requires pretreatment to avoid clogging. In other situations infiltrating urban runoff may contaminate groundwater. Consult the stormwater management manual adopted by the jurisdiction and carefully analyze infiltration according to its prescriptions.];
   - Increasing runoff storage capacity; and
   - Selective runoff bypass.
6. After development, monitor hydroperiod with a continuously recording level gauge or staff and crest stage gauges. If the applicable limits are exceeded, consider additional applications of the strategies in step 5 that may still be available. It is also recommended that goals be established to maintain key vegetation species, amphibians, or both, and that these species be monitored to determine if the goals are being met.

KING COUNTY, WASHINGTON
SURFACE WATER DESIGN MANUAL

REFERENCE 6

HYDROLOGIC/HYDRAULIC DESIGN METHODS

6-A Infiltration Rate Test Methods

6-B Pond Geometry Equations

6-C Introduction to Level Pool Routing

6-D Supplemental Modeling Guidelines

REFERENCE 6-A

INFILTRATION RATE TEST METHODS

See SWDM Chapter 5 and Appendix C for applications and limitations for the use of the infiltration rate test methods below.

PILOT INFILTRATION TEST (PIT)

Source: Stormwater Management Manual for Western Washington (SMMWW 2014)

In-situ infiltration measurements using the Pilot Infiltration Test (PIT) described below is the preferred method for estimating the measured (initial) saturated hydraulic conductivity (Ksat) of the soil profile beneath the proposed infiltration facility. The larger PIT reduces some of the scale errors associated with relatively small-scale double ring infiltrometer or "stove-pipe" infiltration tests. It is not a standard test but rather a practical field procedure recommended by Ecology's Technical Advisory Committee.

LARGE-SCALE PILOT INFILTRATION TEST (PIT)

Infiltration Test

- Excavate the test pit to the estimated surface elevation of the proposed infiltration facility. Lay back the slopes sufficiently to avoid caving and erosion during the test. Alternatively, consider shoring the sides of the test pit.
- The horizontal surface area of the bottom of the test pit should be approximately 100 square feet. Accurately document the size and geometry of the test pit.
- Install a vertical measuring rod (minimum 5-ft. long) marked in half-inch increments in the center of the pit bottom.
- Use a rigid 6-inch diameter pipe with a splash plate on the bottom to convey water to the pit and reduce side-wall erosion or excessive disturbance of the pond bottom. Excessive erosion and bottom disturbance will result in clogging of the infiltration receptor and yield lower than actual infiltration rates.
- Add water to the pit at a rate that will maintain a water level between 6 and 12 inches above the bottom of the pit. A rotameter can be used to measure the flow rate into the pit.

  Note: The depth should not exceed the proposed maximum depth of water expected in the completed facility. For infiltration facilities serving large drainage areas, designs with multiple feet of standing water can have infiltration tests with greater than 1 foot of standing water.

  Every 15-30 min, record the cumulative volume and instantaneous flow rate in gallons per minute necessary to maintain the water level at the same point on the measuring rod.

  Keep adding water to the pit until one hour after the flow rate into the pit has stabilized (constant flow rate; a goal of 5% variation or less variation in the total flow) while maintaining the same pond water level. The total of the pre-soak time plus one hour after the flow rate has stabilized should be no less than 6 hours.
- After the flow rate has stabilized for at least one hour, turn off the water and record the rate of infiltration (the drop rate of the standing water) in inches per hour from the measuring rod data, until the pit is empty. Consider running this falling head phase of the test several times to estimate the dependency of infiltration rate with head.

- At the conclusion of testing, over-excavate the pit to see if the test water is mounded on shallow restrictive layers or if it has continued to flow deep into the subsurface. The depth of excavation varies depending on soil type and depth to hydraulic restricting layer, and is determined by the engineer or certified soils professional. Mounding is an indication that a mounding analysis is necessary.

Data Analysis

Calculate and record the saturated hydraulic conductivity rate in inches per hour in 30 minutes or one-hour increments until one hour after the flow has stabilized.

Note: Use statistical/trend analysis to obtain the hourly flow rate when the flow stabilizes. This would be the lowest hourly flow rate.

Apply appropriate correction factors to determine the site-specific design infiltration rate. See the discussion of correction factors for infiltration facilities in KCSWDM Section 5.4.1.

Example

The area of the bottom of the test pit is 8.5-ft. by 11.5-ft.

Water flow rate was measured and recorded at intervals ranging from 15 to 30 minutes throughout the test. Between 400 minutes and 1,000 minutes the flow rate stabilized between 10 and 12.5 gallons per minute or 600 to 750 gallons per hour, or an average of (9.8 + 12.3) / 2 = 11.1 inches per hour.

SMALL-SCALE PILOT INFILTRATION TEST (PIT)

A smaller-scale PIT can be substituted for the large-scale PIT in any of the following instances.

- The drainage area to the infiltration site is less than 1 acre.
- The testing is for LID BMP's that serve small drainage areas and /or are widely dispersed throughout a project site.
- The site has a high infiltration rate, making a large-scale PIT difficult, and the site geotechnical investigation suggests uniform subsurface characteristics.

Infiltration Test

- Excavate the test pit to the estimated surface elevation of the proposed infiltration facility. In the case of bioretention, excavate to the estimated elevation at which the imported soil mix will lie on top of the underlying native soil. For trenches, excavate to the proposed bottom of the trench. For permeable pavements, excavate to the elevation at which the imported subgrade materials, or the pavement itself, will contact the underlying native soil. If the native soils (road subgrade) will have to meet a minimum subgrade compaction requirement, compact the native soil to that requirement prior to testing. Note that the permeable pavement design guidance recommends compaction not exceed 90% - 92%. Finally, lay back the slopes sufficiently to avoid caving and erosion during the test. Alternatively, consider shoring the sides of the test pit.
- The horizontal surface area of the bottom of the test pit should be 12 to 32 square feet. It may be circular or rectangular, but accurately document the size and geometry of the test pit.
- Install a vertical measuring rod adequate to measure the ponded water depth and that is marked in half-inch increments in the center of the pit bottom.
- Use a rigid pipe with a splash plate on the bottom to convey water to the pit and reduce side-wall erosion or excessive disturbance of the pond bottom. Excessive erosion and bottom disturbance will result in clogging of the infiltration receptor and yield lower than actual infiltration rates. Use a 3-inch diameter pipe for pits on the smaller end of the recommended surface area, and a 4-inch pipe for pits on the larger end of the recommended surface area.

- Pre-soak period: Add water to the pit so that there is standing water for at least 6 hours. Maintain the pre-soak water level at least 12 inches above the bottom of the pit.
- At the end of the pre-soak period, add water to the pit at a rate that will maintain a 6-12 inch water level above the bottom of the pit over a full hour. The depth should not exceed the proposed maximum depth of water expected in the completed facility.
- Every 15 minutes, record the cumulative volume and instantaneous flow rate in gallons per minute necessary to maintain the water level at the same point (between 6 inches and 1 foot) on the measuring rod. The specific depth should be the same as the maximum designed ponding depth (usually 6 – 12 inches).
- After one hour, turn off the water and record the rate of infiltration (the drop rate of the standing water) in inches per hour from the measuring rod data, until the pit is empty.
- A self-logging pressure sensor may also be used to determine water depth and drain-down.
- At the conclusion of testing, over-excavate the pit to see if the test water is mounded on shallow restrictive layers or if it has continued to flow deep into the subsurface. The depth of excavation varies depending on soil type and depth to hydraulic restricting layer, and is determined by the engineer or certified soils professional. The soils professional should judge whether a mounding analysis is necessary.

Data Analysis

See the explanation above under the guidance for the large-scale pilot infiltration test.

SINGLE-RING PERCOLATION TEST PROCEDURE

(See SWDM Section 5.2 and Appendix C for limitations on the use of this procedure)

Preparation for Test

A single ring made of steel or other durable material a minimum of 3 feet in diameter and a minimum of 6 inches high and an adequate supply of clear water is needed. Tests must be performed in undisturbed native soil in suitable locations to determine soil percolation rates for the proposed infiltration facility. The surface of the soil where the test is to be run must be accurately leveled and the ring imbedded and sealed in the soil to prevent water from running under the ring and onto the surface.

Soaking Period

The ring shall be carefully filled with at least 6 inches of clear water. The depth of water should be maintained for at least 4 hours and preferably overnight if fine-grained soils are present. Automatic siphons or float valves may be employed to automatically maintain the water level during the soaking period. It is extremely important that the soil be allowed to soak for a sufficiently long period of time to allow the soil to swell if accurate results are to be obtained.

In sandy soils with little or no fines, soaking is not necessary. If, after filling the ring twice with 6 inches of water, the water seeps completely away in less than ten minutes, the test can proceed immediately.

Measurement of the Percolation Rate

Except for sandy soils, percolation rate measurements are made 15 hours but no more than 30 hours after the soaking period began. The water level is adjusted to 6 inches above the soil surface and successive measurements are taken to determine the percolation rate. At no time during the test is the water level allowed to rise more than 6 inches above the soil surface.

Immediately after adjustment, the water level is measured from a fixed reference point to the nearest 1/16th inch at 30-minute intervals. The test is continued until two successive water level drops do not vary by more than 1/16 inch within a 90-minute period. After each measurement, the water level is readjusted to the 6-inch level. The last water level drop is used to calculate the percolation rate.

In sandy soils or soils in which the first 6-inch of water added after the soaking period seeps away in less than 30 minutes, water level measurements are made at 10-minute intervals for a 1-hour period. The last water level drop is used to calculate the percolation rate.

Calculation of the Percolation Rate

The percolation rate is calculated for each test by dividing the time interval used between measurements by the magnitude of the last water level drop. This calculation results in a percolation rate in terms of minutes/inch. To determine the percolation rate for the area, the rates obtained from each hole are averaged.

Example: If the last measured drop in water level after 30 minutes is 5/8-inch, then:

Percolation rate = (30 minutes)/(5/8 inch) = 48 minutes/inch.

REFERENCE 6-B

POND GEOMETRY CALCULATIONS

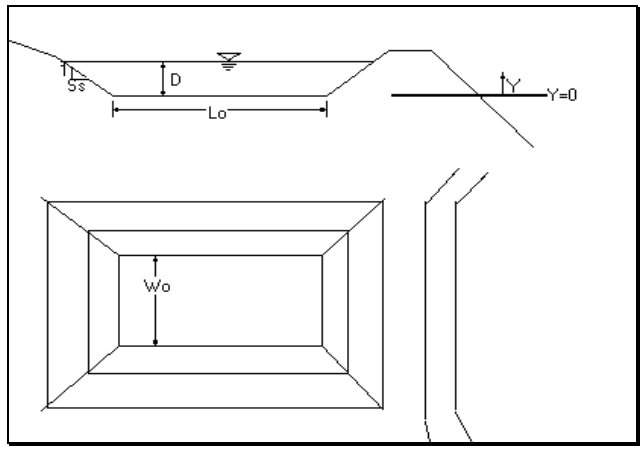

<Known>

Volume	(V)
Pond Depth	(D)
Side Slope	(S_S)
Length-to-Width Ratio	(R)

<Find>

Bottom Area of Rectangular Pond, A_o

<Solution>

Y = depth of section measured from bottom, from zero to D
W_0= width at pond bottom

The pond width (W) at any depth, Y:

$$W_Y = W_0 + 2S_S Y \qquad \text{(Eq. 1)}$$

The pond length (L) at any depth, Y:

$$L_Y = RW_0 + 2S_S Y \qquad \text{(Eq. 2)}$$

The pond area at any depth, Y:

$$A_Y = L_Y W_Y = \left(RW_0 + 2S_S Y\right)\left(W_0 + 2S_S Y\right) \qquad \text{(Eq. 3)}$$

or,

$$A_Y = RW_0^2 + (R+1)2W_0 S_S Y + 4S_S^2 Y^2 \qquad \text{(Eq. 4)}$$

The equation for the pond-full volume (V) is obtained by integrating between Y=0 and Y=D:

$$V = \int_0^D \left(RW_0^2 + (R+1)2W_0 S_S Y + 4S_S^2 Y^2\right) dY \qquad \text{(Eq. 5)}$$

or,

$$V = \left[RW_0^2 Y + \left(R+1\right)W_0 S_S Y^2 + \frac{4}{3} S_S^2 Y^3 \right]\Bigg|_0^D \qquad \text{(Eq. 6)}$$

or,

$$V = RDW_0^2 + S_S D^2 (R+1) W_0 + \frac{4}{3} S_S^2 D^3 \qquad \text{(Eq. 7)}$$

Where

V = Volume of rectangular pond
D = Depth
W_0 = Bottom width
R = Length-to-width ratio
Ss = Side Slope

Rearrange equation to solve for W_0 using quadratic equation, $0 = ax^2 + bx + c$:

$$0 = RDW_0^2 + S_S D^2 (R+1) W_0 + \frac{4}{3} S_S^2 D^3 - V \qquad \text{(Eq. 8)}$$

Use Quadratic Equation to solve for positive solution of W_0, $x = \frac{-b \pm \sqrt{b^2 - 4ac}}{2a}$:

$$W_0 = \frac{-S_S D^2 (R+1) \pm \sqrt{\left[S_S D^2 (R+1)\right]^2 - 4RD\left(\frac{4}{3} S_S^2 D^3 - V\right)}}{2RD} \qquad \text{(Eq. 9)}$$

Use Equation 2 for Length of pond at Y=0:

$$L_0 = RW_0$$

Use Equation 3 for Area of pond at Y=0:

$$A_O = L_0 W_0 = RW_0^2$$

REFERENCE 6-C

STORAGE ROUTING/WATER LEVEL ANALYSIS METHODS

INTRODUCTION TO LEVEL POOL ROUTING

The level pool routing technique is one of the simplest and most commonly used routing methods. It is described in the *Handbook of Applied Hydrology* (Chow, Ven Te, 1964) and elsewhere, and it is based on the continuity equation:

Inflow - Outflow = Change in storage

$$\left[\left(\frac{I_1 + I_2}{2}\right) - \left(\frac{O_1 + O_2}{2}\right)\right] = \frac{\Delta S}{\Delta t} = S_2 - S_1 \qquad \text{(Ref 6C-1)}$$

where I = inflow at time 1 and time 2
O = outflow at time 1 and time 2
S = storage at time 1 and time 2
Δt = time interval, t_2 - t_1

The time interval, Δt, must be consistent with the time interval of the inflow hydrograph or time series. The Δt variable can be eliminated by dividing it into the storage variables to obtain the following rearranged equation:

$$I_1 + I_2 + 2S_1 - O_1 = O_2 + 2S_2 \qquad \text{(Ref 6C-2)}$$

If the time interval, Δt, is in minutes, the units of storage S are now [cf/min] which can be approximated to cfs by multiplying by 1 min/60 sec.

The terms on the left-hand side of the equation are known from the inflow time series and from the storage and outflow values of the previous time step. The unknowns O_2 and S_2 can be solved using the stage-storage and stage-discharge relationships for the storage facility being analyzed or sized. The level pool routing procedure calls for this calculation to be made for each time step of the inflow time series in order to generate the outflow time series for the facility. Because of the repetitive nature of this procedure, it is best performed using a computer.

Developing the Stage-Storage Relationship

The following methods and equations are used for determining the stage-storage relationships of various facility types:

Facilities with Vertical Sides

For vertical-sided facilities such as vaults, the stored volume is simply the bottom area times the height.

Ponds with 3:1 Side Slopes

For ponds with 3:1 side slopes, the stored volume can be approximated by averaging the pond surface area with the bottom area. The following equation was derived based on this assumption and for a square pond but provides a reasonable trial estimation for typical ponds of other shapes.

$$S(H) = 12H^3 + 6\sqrt{A_b}H^2 + A_bH \qquad \text{(Ref 6C-3)}$$

where H = stage height (ft) or water depth above pond bottom
A_b = area of pond bottom (sf)
$S(H)$ = storage (cf) at stage height H

Note: Actual pond volumes and surface areas should be computed based on the methods outlined in Reference Section 6-B, or the following equation:

$$V = \frac{h}{3}(A_t + A_b + \sqrt{A_tA_b}) \qquad \text{(Ref 6C-4)}$$

where h = *depth*
A_t = *area of top*
A_b = *area of the bottom*

Irregularly Shaped Storage Areas

The stage-storage relationship for irregularly shaped storage areas may be developed as follows:

1. Obtain topographic contours of an existing or proposed storage facility location and determine (with a planimeter or otherwise) the area enclosed by each contour. For example, in Figure A below, each contour represents a one-foot interval. Contour 71 is the lowest portion of the facility location and represents zero storage. Contour 76 represents a potential stage of 5 feet above the bottom the facility.

2. Calculate the average end area within each set of contours. For the example in Figure A, the average end area between contours 71 and 72 would be:

$$\frac{600 + 4400}{2} = 2500 \text{ sf}$$

3. Calculate the volume between each set of contours by multiplying the average end area within each set of contours by the difference in elevation. To illustrate, the volume between contours 71 and 72 would be:

$$(2500 \text{ sf})(1 \text{ ft}) = 2500 \text{ cf}$$

Similarly,

Area 72-73 = 6,550 cf
Area 73-74 = 10,050 cf
Area 74-75 = 12,950 cf
Area 75-76 = 16,750 cf

4. Define the total storage below each contour. This is just the sum of the volumes computed in the previous step up to the contour in question. For example, there is no storage below contour 71, 2500 cf below contour 72, and (6550 + 2500) = 9050 cf below contour 73.

In summary,

Contours	Stage	Sum of Volumes			Total Volume	
Contours 71-72	1	0	+	2,500	=	2,500 cf
Contours 72-73	2	2,500	+	6,500	=	9,050 cf
Contours 73-74	3	9,050	+	10,050	=	19,100 cf
Contours 74-75	4	19,100	+	12,950	=	32,050 cf
Contours 75-76	5	32,050	+	16,750	=	48,800 cf

Figure B below is a plot of the stage-storage relationship for this example.

FIGURE A - STORAGE AREA CONTOURS AT ONE-FOOT INTERVALS

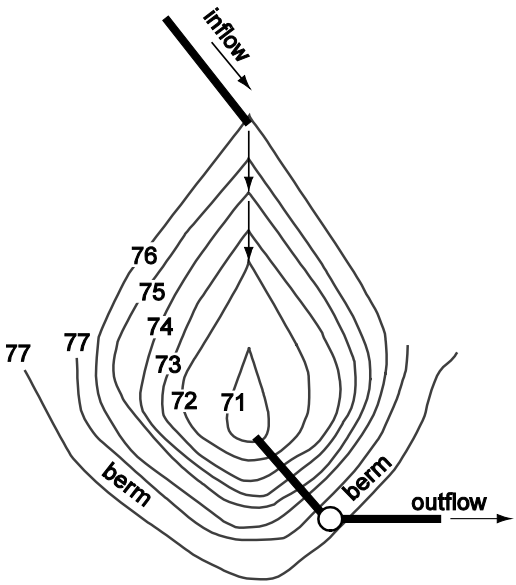

Area within each contour	
71	600 sq. ft.
72	4400 sq. ft.
73	8700 sq. ft.
74	11,400 sq. ft.
75	14,500 sq. ft.
76	19,000 sq. ft.

FIGURE B - STAGE-STORAGE RELATIONSHIP

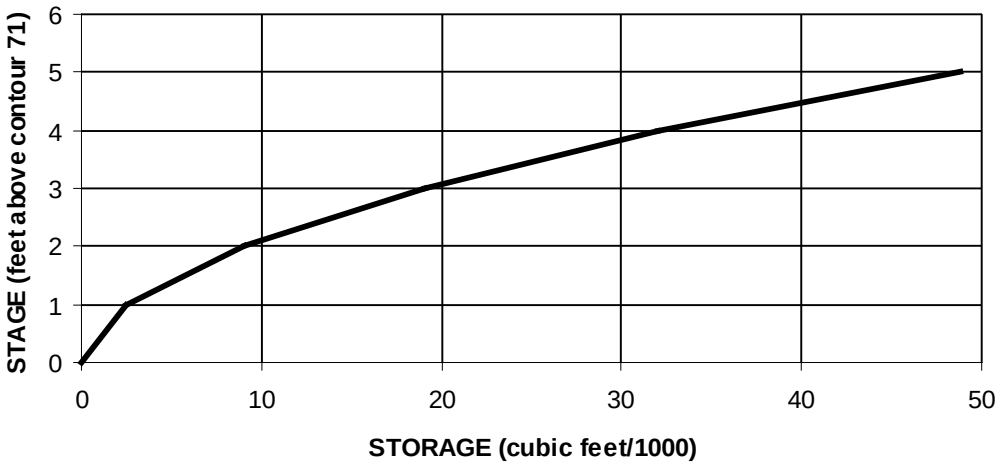

Developing the Stage-Discharge Relationship

The stage-discharge relationship is determined by computing the peak discharge rate for each stage height used in the stage-storage relationship. Peak discharge rates are computed using the appropriate flow equation(s) or headwater data corresponding to the type of outlet present or proposed.

(This page intentionally left blank)

REFERENCE 6-D

SUPPLEMENTAL MODELING GUIDELINES

Following is a list of approved models and default parameters for use specifically with the King County *Surface Water Design Manual (SWDM) (2016 edition or later)*. For general use of the model(s), including default parameters, assumptions and limitations of the model(s), see the user's documentation provided with the software.

NOTE: Modification of the default modeling parameters shall only be considered through the adjustment process per Section 1.4.

APPROVED MODELS

*Note: **KCRTS** is no longer maintained by King County and is **not an approved model for use with the SWDM (2016) or later editions**.*

Stormwater runoff and water quality design

- MGS Flood http://mgsengr.com/mgsfloodhome.html
- WWHM2012
  The latest update distributed by Ecology is downloadable at:
  http://www.ecy.wa.gov/programs/wq/stormwater/wwhmtraining/index.html
- WWHM 4
  http://www.clearcreeksolutions.info/
- Hydrologic Simulation Program (Fortran) (HSPF)
  http://water.usgs.gov/software/HSPF/

Groundwater mounding evaluation

- MODRET ver. 6.1 or later (*Infiltration module ONLY*)
  http://www.scisoftware.com/environmental_software/product_info.php?cPath=21_27&products_id=93&sessid=7fdd6c978ff1d9ffe506964df530536e
- MODFLOW

  http://water.usgs.gov/ogw/modflow/

Backwater analysis

- KCBW
  http://www.kingcounty.gov/environment/waterandland/stormwater/documents/surface-water-design-manual/hydrologic-hydraulic-model-software.aspx
- Several others as accepted during the DPER plan review process
- Spreadsheets often used, depending on conveyance network complexity

PARAMETERS USED IN MODELING

Follow the guidance in the software user's documentation except as indicated below. Revision of default or specific parameters requires an approved adjustment per Section 1.4

General Default Parameters

Pervious and Impervious Land Categories (PERLND and IMPLND parameter values)

- In WWHM, MGS Flood and HSPF, pervious land categories are represented by PERLNDs; impervious land categories by IMPLNDs.

  WWHM and MGS Flood provide over 20 unique PERLND parameters that describe various hydrologic factors that influence runoff and 4 parameters to represent IMPLND.

  These default values are based on regional parameter values developed by the U.S. Geological Survey for watersheds in western Washington (Dinicola, 1990), and for the WWHM model, additional HSPF modeling work conducted by AQUA TERRA Consultants. A complete description of the PERLND parameters can be found in the HSPF User Manual,8 ***The values are not to be revised unless approved through the adjustment process in Section 1.4.***

  The precipitation stations used to develop the values represent rainfall at elevations below 1500 feet. WWHM and MGS Flood do not include snowfall and snowmelt in their analyses.

- When sizing flow control facilities, the infiltration needs to be turned off for infiltrative BMPs to avoid double-counting the infiltration/credit benefit in the sizing.

Default Parameters and SWDM-specific Guidelines by Model (periodically updated)

MGS Flood:

http://mgsengr.com/mgsfloodhome.html

Applicability and Limitations to MGS Flood[1]
(See the full discussion of Applications and Limitations in the User's Documentation)

MGS Flood is intended for the analysis of stormwater detention facilities in the lowlands of western Washington. The program utilizes the HSPF routines for computing runoff from rainfall for pervious and impervious land areas. The program does not include routines for simulating the accumulation and melt of snow and its use should be limited to lowland areas where snowmelt is typically not a major contributor to floods or to the annual runoff volume. In general, these conditions correspond to an elevation below approximately 1500 feet.

The program is applicable for the analysis of stormwater facilities for small sites (several thousand square feet) to watersheds (10's of square miles). The program includes precipitation timeseries with a 15-minute time step for much of western Washington. For sites outside of the 15-minute time series coverage, precipitation time series with a 1-hour time step are included. Ecology allows the use of a 1-hour time step if the 15-minute step is not available.

As of this writing, the wetland analysis module of MGS Flood does not include methodology added to the 2016 SWDM. The update methodology may be completed using a spreadsheet. The methodology in the 2009 SWDM was retained as a conservative alternative (subject to DPER determination) and is supported with the MGS Flood wetland analysis module.

Guidelines for use of MGS Flood with the SWDM:

1. Use of the Extended Precipitation Timeseries per the general model guidance is required.
2. Use of the 1-hour timestep is only allowed where the 15-minute timestep is not available in the extended precipitation map.

[1] Source: *MGS Flood User's Manual, Proprietary Version,* with references to King County requirements added

3. Use the flow control exception threshold of 0.1 cfs with the 1-hr timestep. Where the 15-minute timestep is required in design (e.g., water quality facility sizing), multiply the 1-hr timestep peak value by 1.6 to approximate the 15-min timestep peak value (Reference: SMMWW 2014 BMP T9.10: Basic Biofiltration Swale, Stability Check SC-1).

Western Washington Hydrology Model (WWHM2012, WWHM4):

http://www.ecy.wa.gov/programs/wq/stormwater/wwhmtraining/index.html

Applicability and Limitations to WWHM2012/WWHM4[2]

(See the full discussion of Applications and Limitations in the User's Documentation)

Ecology created WWHM for the specific purpose of sizing stormwater control facilities for new developments in western Washington. WWHM can be used for a range of conditions and developments; however, certain limitations are inherent in this software.

WWHM uses the EPA HSPF software program to do all of the rainfall-runoff and routing computations. Therefore, HSPF limitations are included in the approved model. For example, backwater or tailwater control situations are not explicitly modeled by HSPF. This is also true in the approved model.

Earlier versions of WWHM, WWHM1and WWHM2 had limited routing capabilities. The routing capabilities of WWHM2012 have improved and the user can input multiple stormwater control facilities and runoff is routed through them. If the proposed development site involves routing through a natural lake or wetland in addition to multiple stormwater control facilities, WWHM2012 can be used to do the routing computations and additional analysis.

Routing effects become more important as the drainage area increases. For this reason, Ecology recommends that WWHM not be used for drainage areas greater than one-half square mile (320 acres). WWHM can be used for small drainage areas less than an acre in size.

Guidelines for use of WWHM2012 or WWHM4with the SWDM:

1. King County does not allow credit for water quality treatment for flows directed through the Ecology-approved bioretention soil mix. Assure the water quality design compliance evaluation accounts for this restriction with adequate pretreatment applications.
2. Water quality facility sizing: Per the restriction in (1), flow control BMPs serving pollution-generating surfaces may require water quality treatment located immediately upstream. These water quality facilities may be sized using the tributary area characterized by BMP flow control credits.
3. Water quality reporting: When using the water quality summary feature, assure the water quality design compliance evaluation accounts for the restriction in (1) above.
4. Submittals for permit review:

   Electronic files – include the following files from the model run(s):

   - WWHM2012 binary project file (.WHM file extension)
   - WWHM2012 ASCII project file (.WH2 file extension)
   - WWHM2012 WDM file (.WDM file extension)
   - WWHM2012 report file (Word, Rich Text or PDF file)

[2] Source: *Stormwater Management Manual for Western Washington (SMMWW), 2014 update*

- Note: When viewing or printing the project report in text mode, the water quality reporting specific to elements, as selected in the LID Report accessed from the LID icon to the right of the Tools icon, will not display properly unless landscape orientation and legal size paper are selected as viewing/printing options.

MODRET ver. 6.1 (Infiltration module ONLY)

http://www.scisoftware.com/environmental_software/product_info.php?cPath=21_27&products_id=93&sessid=7fdd6c978ff1d9ffe506964df530536e

Training available for the software: www.suncam.com

Applicability and Limitations for MODRET ver. 6.1[3]

The use of MODRET for SWDM applications is limited to groundwater mounding analyses using the Infiltration module of the model.

MODRET (Computer **MOD**EL to Design **RET**ENTION Ponds) was originally developed in 1990, by Nicolas E. Andreyev, P.E. as a complement to a research and development project for the Southwest Florida Water Management District (SWFWMD), Brooksville, Florida. Since 1990 there have been several revisions to the original model. The user is assumed to be a professional with a background in hydrology and/or hydrogeology, and has a good command in surface runoff and groundwater flow modeling. It is assumed that the user has read the "Stormwater Retention Pond Infiltration Analysis in Unconfined Aquifers" manual (Andreyev, Wiseman, 1989, available from the author or from DNRP) and understands the applicability and limitations of the MODRET program. It is also assumed that the user is familiar with the use of personal computers, Microsoft Windows operating system and its environment.

As a whole, MODRET 6.1 is not compliant with King County requirements and SWDM methodologies. The model is tailored around southwest Florida regulatory requirements and methodologies, and allows generation of runoff hydrographs with various methods, calculation of infiltration losses from a retention pond, discharge (overflow) through various types of weirs and orifices, and generation of graphical results. However, the model's methodology and graphic output closely follow southwest Florida requirements and are not applicable for use in King County. The model's use with the SWDM is limited to the infiltration module and to the tabular output produced by the module.

Guidelines for use of MODRET 6.1 with the SWDM:

MODRET is a stormwater model based on USGS's MODFLOW and is fashioned around Florida regulatory requirements for stormwater control and pollution abatement. It is single event-based, thus it is limited in its application to King County's continuous Runoff Files Method requirements. However, it is a popular tool for evaluating groundwater mounding in infiltration facilities and is mandated by Ecology for the purpose. The Infiltration module in MODRET is the only module to be used with the SWDM.

Due to the model's event-based limitation, the Infiltration module's graphics output screens do not provide useful information for mounding analyses conducted under this manual and are not to be used unless justified by the professional preparing the analysis and report. The Input screen is the main entry point for data input. The View screen states the maximum water surface results at the bottom of the screen (scroll down to view), and the time-based results in the View screen allow a check against the seasonal rainfall pattern in the hydrograph file.

[3] Source: *MODRET ver.6.1 Help files,* with references to King County requirements added.

Infiltration Module Input Screen

Unsaturated Analysis: Yes/No **--** The unsaturated analysis in MODRET is an initial transitional stage where the available pore volume fills until the saturated condition is achieved. A conservative approach would not include the unsaturated analysis, ignoring the benefit of the filling of the pore volume.

Runoff Data – (selected when the inputs are completed and RUN is selected) Do not use the MANUAL option in the dropdown. Runoff data shall be prepared per Section 5.4.1, *Groundwater Mounding Analysis* and selected with the HYDROGRAPH option in the dropdown menu. The data is exported from the approved model and manipulated in a spreadsheet to the format described in the MODRET documentation, then saved as a Formatted Text space-delimited file (.PRN file extension). This file is then modified by manually changing its filename extension from .PRN to .SCS. The file is then placed in the MODRET working directory and will appear among the selections when the HYDROGRAPH option is selected.

Design Highwater Elevation, Area at Starting Water Level (area of pond bottom), ***Elevation of Pond Bottom, Elevation of Starting Water Level*** (same as pond bottom), ***Pond Length to Width Ratio*** – values are taken or calculated from the design plans for the facility.

Volume Between Starting Water Level & Estimated High Water Level – enter the calculated **net** volume of storage, that is, the gross storage volume of the facility multiplied by the calculated Average Effective Storage Coefficient of Pond (1.0 for an open pond, <1 for gravel trenches or tanks bedded in washed rock). The model does not do this calculation.

Average Effective Storage Coefficient of Pond – calculate from facility design plan.(1.0 for an open pond, < 1.0 for gravel trenches or tanks bedded in washed rock); use 0.35 porosity for typical 2" washed drain rock, justify any other porosity value.

Elevation of Effective Aquifer Base, Elevation of Seasonal High Groundwater Table – values determined from subsurface exploration and documented/justified in the geotechnical summary provided with the analysis. Accurate aquifer thickness data (i.e., location of the aquifer base) can be beneficial to the analysis results, but the data is often incomplete, limiting the reportable aquifer thickness to the depth of the exploration.

Average Effective Storage Coefficient of Soil for UNSATURATED Analysis, Average Effective Storage Coefficient of Soil for SATURATED Analysis **--** values determined from subsurface exploration and documented/justified in the geotechnical summary provided with the analysis. The two values are typically not the same and should reflect the specific yield characteristic of the soil (the moisture content of the unsaturated soil left due to capillary forces and surface tension after gravity draining of the saturated soil).

Unsaturated Vertical Hydraulic Conductivity, Saturated Horizontal Hydraulic Conductivity **--** The infiltration rate entered into the model should be the facility design infiltration rate, adjusted to exclude the geometry reduction factor, $f_{geometry}$. This infiltration rate is entered as the *Unsaturated Vertical Hydraulic Conductivity (Kvu)* and is derived from field or lab tests (field tests include a saturation period for the receptor soils, but the results are assumed to reflect the unsaturated condition unless otherwise justified). The *Saturated Horizontal Hydraulic Conductivity* is the dominant mechanism behind mounding, being the lateral movement of the inflow volume through the soil when confined by the water table or impervious stratum below, once the pore volume in the vadose zone is filled. It is indirectly related to the Unsaturated Vertical Hydraulic Conductivity and can be approximated per the guidance in Section 5.4.1 or determined though lab tests or field pumping tests.

The effects of the geometry on groundwater mounding are captured by the model in lieu of applying the reduction factor, $f_{geometry}$, so accurate determination of the geometrical inputs is necessary for the

modeling results to be valid. Geometry influencing the analysis includes length to width ratio (L:W), design pond depth, net storage volume in the facility, separation of the facility bottom from the seasonal high groundwater table and/or impermeable layer, and location and thickness of the underlying aquifer

Factor of Safety for Kvu --A factor of safety of 1.0 for *Kvu* may be applied when following the guidance for determining the value for Unsaturated Vertical Hydraulic Conductivity above. The input screen for MODRET suggests a value of 2.0; software and supporting documentation indicate the suggestion accounts for plugging by sedimentation and variability of the receptor soil characteristics and field testing results. The reduction factors described in Section 5.4.1 for the Simplified Method achieve this purpose and are to be applied to determine the value for *Kvu* for MODRET input. Additional factor(s) of safety may be applied according to professional judgment.

Time Increment(s) During/After/Total for Storm Event – Use the program defaults unless otherwise justified by the professional preparing the analysis.

Additional guidance

- Allowable stress periods maximum 400 or so; time steps (aka data points) maximum count 9999 for hydrograph input files.
- The MODRET report printout will be very long (approximately 80 pages) when the water year hydrograph files described above under *Input Screen/Runoff Data* are applied. The additional pages are largely a printout of the View screen, where the progress of the model run is displayed and the maximum high water elevation information (i.e., the primary result of concern) appears at the end of the table Consult the review staff at DPER to determine if the intermediate portion is necessary to be included in the review submittal.
- The hydrograph input file format is described in the model appendices. It is helpful to view one of the installed .SCS files as an example for preparing the files. In a spreadsheet (e.g., Microsoft Excel), manipulate the time series file produced by the approved model to the format described in the appendix using Courier font, save as a .PRN file (i.e., Space Delimited). After exiting the spreadsheet program, replace the saved file's extension with .SCS and move the file to the working folder for MODRET. The file will show in the Hydrograph selection process of the Infiltration module.
- If the Help module in MODRET does not function, open the document(s) directly from the program folder.

Guidance for use of MODRET 6.1 with other software

- MODRET and 64 bit Win 7/8 compatibility:

  MODRET is a 32 bit program that will work on 64 bit operating systems. By default, a 32 bit program will install to the "Program Files (x86)" directory on a 64 bit operating system, which causes problems for MODRET. To work around this, change the install directory to C:\MODRET. (DURING INSTALLATION)

- MODRET and Win 7/8 display compatibility:

  The menus in MODRET appear black in Win 7/8. To work around this, change the display theme to the Classic, High Contrast Black, or High Contrast White theme and the menu text will display properly.

- MODRET and Acrobat for Internet Explorer:

  During installation, you may receive an error related to AcroIEHelper.dll. Choose Ignore and continue with the installation. As long as you can continue viewing pdf's in your browser, this should not be an issue.

KING COUNTY, WASHINGTON
SURFACE WATER DESIGN MANUAL

REFERENCE 7

ENGINEERING PLAN SUPPORT

7-A KING COUNTY STANDARD MAP SYMBOLS

See the *King County Department of Transportation CADD Standards Manual (2014) at:* http://www.kingcounty.gov/~/media/transportation/kcdot/roads/engineering/documents/CADDFiles/2014KCDOTCADDStandardsManual.ashx

7-B STANDARD PLAN NOTES AND EXAMPLE CONSTRUCTION SEQUENCE

7-C STORMFILTER FACILITY ACCESS AND CARTRIDGE CONFIGURATION

REFERENCE 7-B
KING COUNTY STANDARD PLAN NOTES

The standard plan notes must be included on all engineering plans. Notes which in no way apply to the project may be omitted; however, the remaining notes must not be renumbered. For example, if General Note #3 were omitted, the remaining notes should remain numbered 1, 2, 4, 5, 6, etc.

GENERAL NOTES

(1) All design and construction shall be in accordance with permit conditions, the King County Code (KCC), the King County Road Design and Construction Standards (KCRDCS), Washington State DOT (WSDOT) Standard Specifications and the conditions of preliminary approval. It shall be the sole responsibility of the applicant and the professional civil engineer to correct any error, omission, or variation from the above requirements found in these plans. All corrections shall be at no additional cost or liability to King County.

(2) The design elements within these plans have been reviewed according to the King County Department of Permitting and Environmental Review (DPER) Engineering Review checklist. Some elements may have been overlooked or missed by the DPER plan reviewer. Any variance from adopted standards is not allowed unless specifically approved by King County prior to construction.

(3) Approval of this road, grading, parking and drainage plan does not constitute an approval of any other construction (e.g. domestic water conveyance, sewer conveyance, gas, electrical, etc.)

(4) Before any construction or development activity, a preconstruction meeting must be held between the DPER's Development Inspector, the Applicant, and the Applicant's Construction Representative.

(5) A copy of these approved plans must be on the job site whenever construction is in progress.

(6) Grading activities (site alteration) are limited to the hours of 7 a.m. to 7 p.m. Monday through Saturday and 10 a.m. to 5 p.m. on Sunday, unless otherwise approved with a written decision by the Reviewing Agency.

(7) It shall be the applicant's/contractor's responsibility to obtain all construction easements necessary before initiating off-site work. Easements require review and approval prior to construction.

(8) Franchised utilities or other installations that are not shown on these approved plans shall not be constructed unless an approved set of plans that meet all requirements of KCRDCS Chapter 8 are submitted to the DPER's Development Inspector three days prior to construction.

(9) Datum shall be NAVD88 unless otherwise approved by DPER.

(10) Dewatering system (underdrain) construction shall be within a right-of-way or appropriate drainage easement, but not underneath the roadway section. All underdrain systems must be constructed in accordance with WSDOT Standard Specifications.

(11) All utility trenches and roadway subgrade shall be backfilled and compacted to 95 percent maximum density per WSDOT Standard Specifications 2-03.3(14)D, Method C.

(12) Open cutting of existing roadways for non-franchised utility or storm work is not allowed unless specifically approved by DPER and noted on these approved plans. Any open cut shall be restored in accordance with KCRDCS.

(13) The Contractor shall be responsible for providing adequate safeguards, safety devices, protective equipment, flaggers, and any other needed actions to protect the life, health, and safety of the public, and to protect property in connection with the performance of work covered by the contractor. Any work within the traveled right-of-way that may interrupt normal traffic flow shall require at least one flagger for each lane of traffic affected. Manual on Uniform Traffic Control Devices (MUTCD) shall apply. Work in right-of-way is not authorized until a traffic control plan is approved by King County.

DRAINAGE NOTES

(1) Proof of liability insurance shall be submitted to DPER prior to the construction of the drainage facilities, preferably at the preconstruction meeting.

(2) All pipe and appurtenances shall be laid on a properly prepared foundation in accordance with WSDOT specifications. This shall include leveling and compacting the trench bottom, the top of the foundation material, and any required pipe bedding, to a uniform grade so that the entire pipe is supported by a uniformly dense unyielding base.

(3) Steel pipe shall be aluminized, or galvanized with asphalt treatment #1 or better inside and outside.

(4) All drainage structures, such as catch basins and manholes, not located within a traveled roadway or sidewalk, shall have solid locking lids. All drainage structures associated with a permanent retention/detention facility shall have solid locking lids.

(5) All catch basin grates shall conform to KCRDCS, which includes the stamping "OUTFALL TO STREAM, DUMP NO POLLUTANTS" and "Property of King County", except that private drainage systems shall not have the words “Property of King County”.

(6) All driveway culverts located within King County right-of-way shall be of sufficient length to provide a minimum 3:1 slope from the edge of the driveway to the bottom of the ditch. Culverts shall have beveled end sections to match the side slope per KCRDCS.

(7) Rock for erosion protection of roadway ditches, where required, must be of sound quarry rock, placed to a depth of 1 foot, and must meet the following specifications: 4"-8"/40%-70% passing; 2"- 4" rock/30%-40% passing; and -2" rock/10%-20% passing. Installation shall be in accordance with KCRDCS.

(8) Drainage outlets (stub-outs) shall be provided for each individual lot, except for those lots approved for infiltration by King County. Stub-outs shall conform to the following:

a) Each outlet shall be suitably located at the lowest elevation on the lot, so as to service all future roof downspouts and footing drains, driveways, yard drains, and any other surface or subsurface drains necessary to render the lots suitable for their intended use. Each outlet shall have free-flowing, positive drainage to an approved stormwater conveyance system or to an approved outfall location.

b) Outlets on each lot shall be located with a five-foot-high, 2" x 4" stake marked "storm" or "drain". The stub-out shall extend above surface level, be visible, and be secured to the stake.

c) Pipe material shall conform to underdrain specifications described in KCRDCS and, if non-metallic, the pipe shall contain wire or other acceptable detection.

d) Drainage easements are required for drainage systems designed to convey flows through individual lots.

e) The applicant/contractor is responsible for coordinating the locations of all stub-out conveyance lines with respect to the utilities (e.g. power, gas, telephone, television).

f) All individual stub-outs shall be privately owned and maintained by the lot home owner.

(9) All disturbed pervious areas (compacted, graded, landscaped, etc.) of the development site must demonstrate one of the following, in accordance with KCC and the Low Impact Development (LID) components of the approved site plan: The existing duff layer shall be staged and redistributed to maintain the moisture capacity of the soil, OR; Amended soil shall be added to maintain the moisture capacity.

(10) Seasonal clearing is limited between October 1 and April 30 inclusive, unless otherwise approved with a written decision by the Reviewing Agency.

(11) Improvements and/or buildings shall not be installed until drainage facilities are “in operation”, (KCC 9.04).

EROSION AND SEDIMENTATION CONTROL NOTES

(1) Approval of this erosion and sedimentation control (ESC) plan does not constitute an approval of permanent road or drainage design (e.g. size and location of roads, pipes, restrictors, channels, retention facilities, utilities, etc.)

(2) The implementation of these ESC plans and the construction, maintenance, replacement, and upgrading of these ESC facilities is the responsibility of the applicant/ESC supervisor until all construction is approved.

(3) The boundaries of the clearing limits shown on this plan shall be clearly flagged by survey tape or fencing, if required, prior to construction (King County SWDM Appendix D). During the construction period, no disturbance beyond the clearing limits shall be permitted. The clearing limits shall be maintained by the applicant/ESC supervisor for the duration of construction.

(4) Stabilized construction entrances shall be installed at the beginning of construction and maintained for the duration of the project. Additional measures, such as constructed wheel wash systems or wash pads, may be required to ensure that all paved areas are kept clean and track out to road right of way does not occur for the duration of the project.

(5) The ESC facilities shown on this plan must be constructed prior to or in conjunction with all clearing and grading so as to ensure that the transport of sediment to surface waters, drainage systems, flow control BMP locations (existing and proposed), and adjacent properties is minimized.

(6) The ESC facilities shown on this plan are the minimum requirements for anticipated site conditions. During the construction period, these ESC facilities shall be upgraded as needed for unexpected storm events and modified to account for changing site conditions (e.g. additional cover measures, additional sump pumps, relocation of ditches and silt fences, perimeter protection etc.).

(7) The ESC facilities shall be inspected daily by the applicant/ESC supervisor and maintained to ensure continued proper functioning. Written records shall be kept of weekly reviews of the ESC facilities.

(8) Any areas of exposed soils, including roadway embankments, that will not be disturbed for two days during the wet season or seven days during the dry season shall be immediately stabilized with the approved ESC cover methods (e.g., seeding, mulching, plastic covering, etc.).

(9) Any area needing ESC measures, not requiring immediate attention, shall be addressed within seven (7) days.

(10) The ESC facilities on *inactive* sites shall be inspected and maintained a minimum of once a month (more frequently as required by the DPER site inspector) or within 24 hours following a storm event.

(11) At no time shall more than one (1) foot of sediment be allowed to accumulate within a catch basin. All catch basins and conveyance lines shall be cleaned prior to paving. The cleaning operation shall not flush sediment-laden water into the downstream system.

(12) Any permanent retention/detention facility used as a temporary settling basin shall be modified with the necessary erosion control measures and shall provide adequate storage capacity. If the permanent facility is to function ultimately as an infiltration system, the temporary facility must be rough graded so that the bottom and sides are at least three feet above the final grade of the permanent facility. Flow control BMP facility areas (existing or proposed) shall not be used as temporary facilities and shall be protected from sedimentation and intrusion.

(13) Cover measures will be applied in conformance with Appendix D of the King County Surface Water Design Manual.

(14) Prior to the beginning of the wet season (Oct. 1), all disturbed areas shall be reviewed to identify which ones can be seeded in preparation for the winter rains. Disturbed areas shall be seeded within one week of the beginning of the wet season. A sketch map of those areas to be seeded and those areas to remain uncovered shall be submitted to the DPER inspector for review.

STRUCTURAL NOTES

(1) These plans are approved for standard road and drainage improvements only. Plans for structures such as bridges, vaults, and retaining walls require a separate review and approval by DPER prior to construction (KCC 16.04. 16.70, 14.20).

(2) Rockeries are considered to be a method of bank stabilization and erosion control. Rockeries shall not be constructed to serve as retaining walls. All rockeries in County road right-of-way shall be constructed in accordance with KCRDCS. Rockeries outside of road right-of-way shall be constructed in accordance with the International Building Code.

EXAMPLE CONSTRUCTION SEQUENCE

CONSTRUCTION STORMWATER POLLUTION PREVENTION RECOMMENDED CONSTRUCTION SEQUENCE

(1) Pre-construction meeting.

(2) Post sign with name and phone number of CSWPP/ESC supervisor (may be consolidated with the required notice of construction sign).

(3) Flag or fence clearing limits.

(4) Install catch basin protection and flow control BMP area protection as required.

(5) Grade and install construction entrance(s).

(6) Install perimeter protection (silt fence, brush barrier, etc.).

(7) Construct sediment ponds and traps.

(8) Grade and stabilize construction roads.

(9) Construct surface water controls (interceptor dikes, pipe slope drains, etc.) simultaneously with clearing and grading for project development. Construct SWPPS controls in anticipation of scheduled construction activity (e.g., concrete-related pH measures for utility, vault or roadway construction)

(10) Maintain erosion control and SWPPS measures in accordance with King County standards and manufacturer's recommendations.

(11) Relocate erosion control and SWPPS measures or install new measures so that as site conditions change the erosion and sediment control and pollutant protection is always in accordance with the *King County Construction Stormwater Pollution Prevention Standards*.

(12) Cover all areas that will be unworked for more than seven days during the dry season or two days during the wet season with straw, wood fiber mulch, compost, or equivalent.

(13) Stabilize all areas that reach final grade within seven days.

(14) Seed or sod any areas to remain unworked for more than 30 days.

(15) Upon completion of the project, all disturbed areas must be stabilized and BMPs removed if appropriate.

KING COUNTY, WASHINGTON
SURFACE WATER DESIGN MANUAL

REFERENCE 7-C

STORMFILTER FACILITY ACCESS AND CARTRIDGE CONFIGURATION

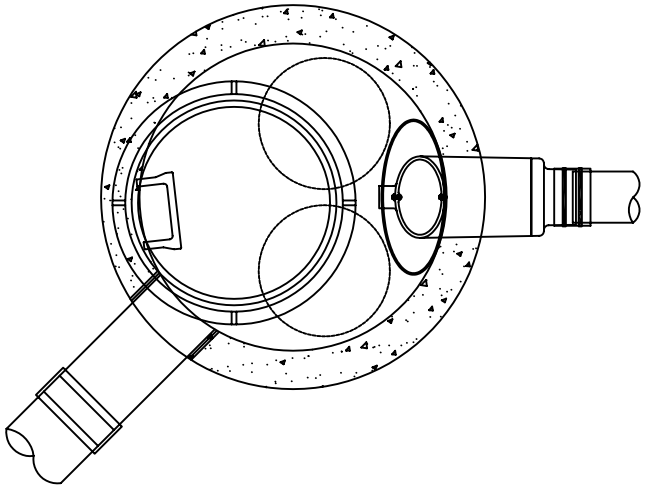

48" MANHOLE STORMFILTER - PLAN VIEW (1/1)

1 - 30" ROUND CASTING

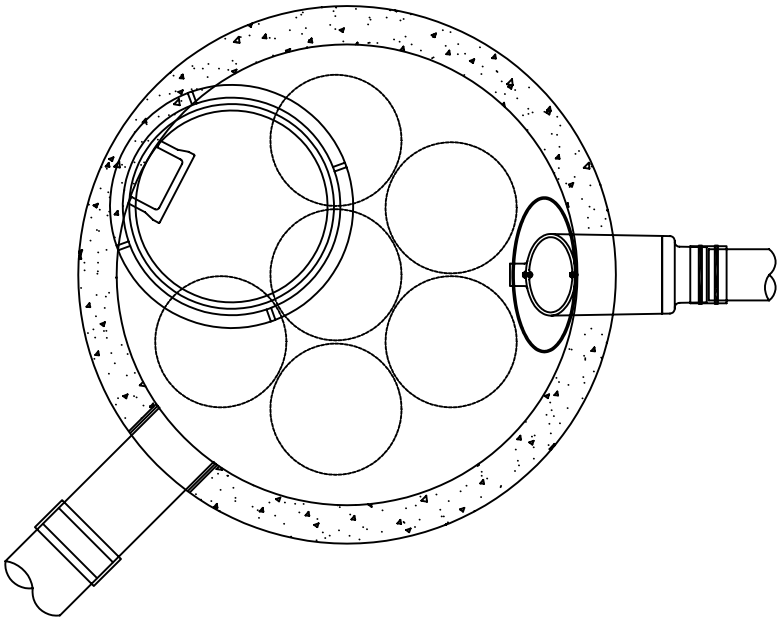

72" MANHOLE STORMFILTER - PLAN VIEW (2/1)

1 - 30" ROUND CASTING

THE STORMWATER MANAGEMENT StormFilter® U.S. PATENT No. 5,322,629, No. 5,707,527, No. 6,027,639 No. 6,649,048, No. 5,624,576, AND OTHER U.S. AND FOREIGN PATENTS PENDING

Note the Manhole Stormfilter is also available in a 96" configuration.
Contact the Stormfilter vendor for information.

©2005 Stormwater360

Stormwater360 A CONTECH Company

www.stormwater360.com

MANHOLE STORMFILTER
48" AND 72" - PLAN VIEW
ACCESS SCHEMATIC

DRAWING 1

1/3

DATE: 11/29/05	SCALE: NONE	FILE NAME: KINGCOUNTY-ACCESS-SCH1	DRAWN: MJW	CHECKED: KT

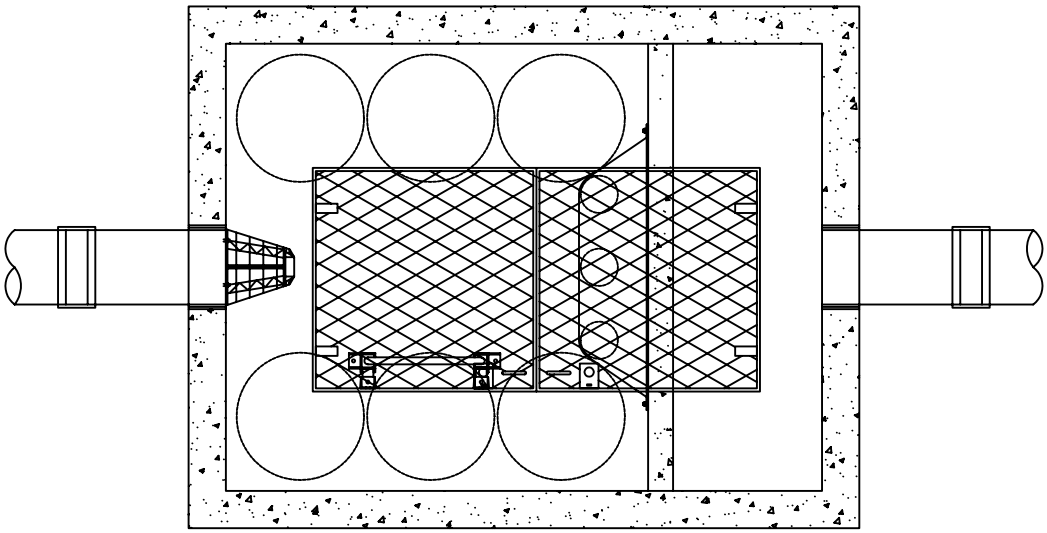

6' x 8' PRECAST STORMFILTER - PLAN VIEW (1/2)

1 - 3'X6' DOOR

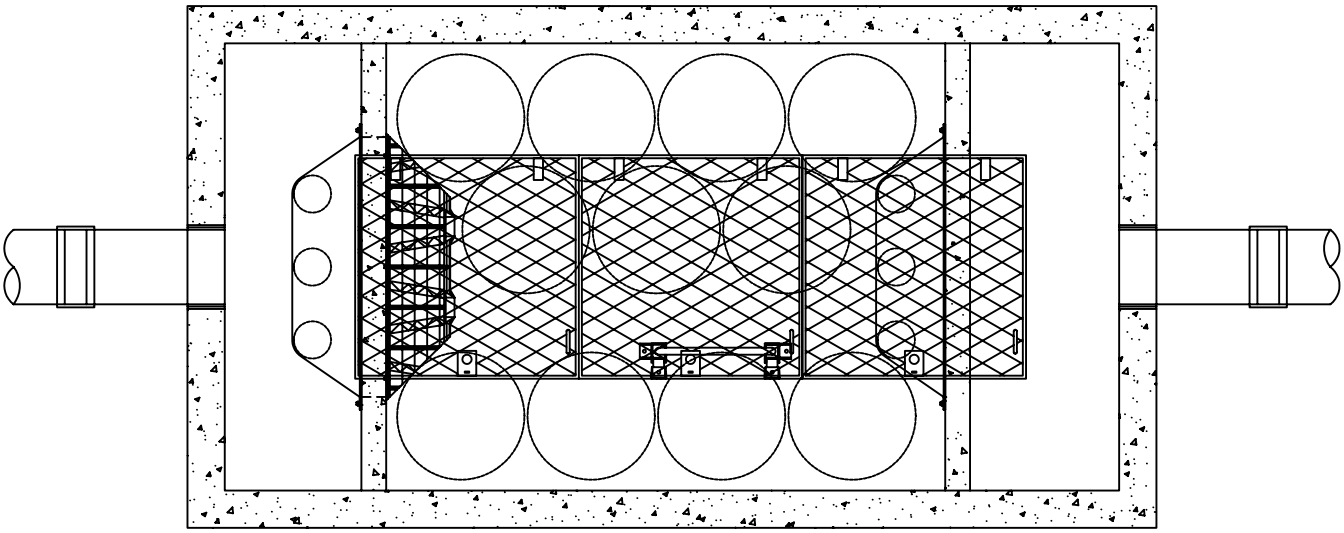

6' x 12' PRECAST STORMFILTER - PLAN VIEW (2/2)

1 - 3'X9' DOOR

THE STORMWATER MANAGEMENT StormFilter® U.S. PATENT No. 5,322,629, No. 5,707,527, No. 6,027,639 No. 6,649,048, No. 5,624,576, AND OTHER U.S. AND FOREIGN PATENTS PENDING

©2005 Stormwater360

Stormwater360™ A CONTECH Company

www.stormwater360.com

PRECAST STORMFILTER VAULTS
6' x 8' AND 6' x 12' - PLAN VIEW
ACCESS SCHEMATIC

DRAWING 2

2/3

DATE: 11/29/05	SCALE: NONE	FILE NAME: KINGCOUNTY-ACCESS-SCH1	DRAWN: MJW	CHECKED: KT

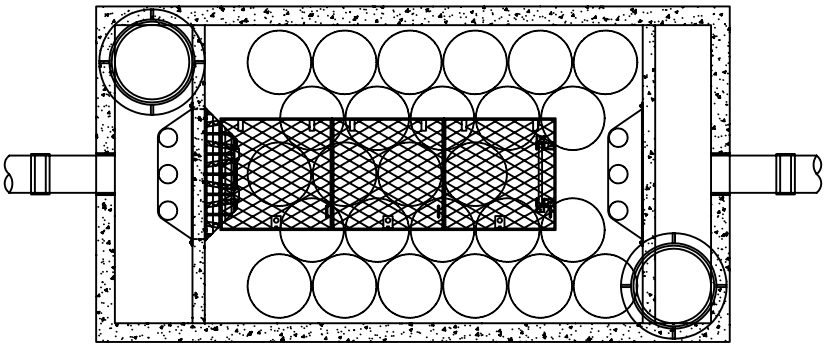

8' x 16' PRECAST STORMFILTER - PLAN VIEW (1/3)

1 - 3'X9' DOOR
2 - 24" ROUND CASTINGS

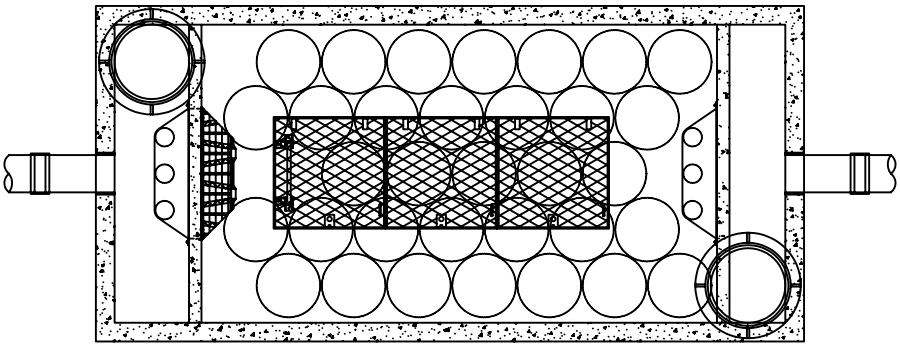

8' x 18' PRECAST STORMFILTER - PLAN VIEW (2/3)

1 - 3'X9' DOOR
2 - 24" ROUND CASTINGS

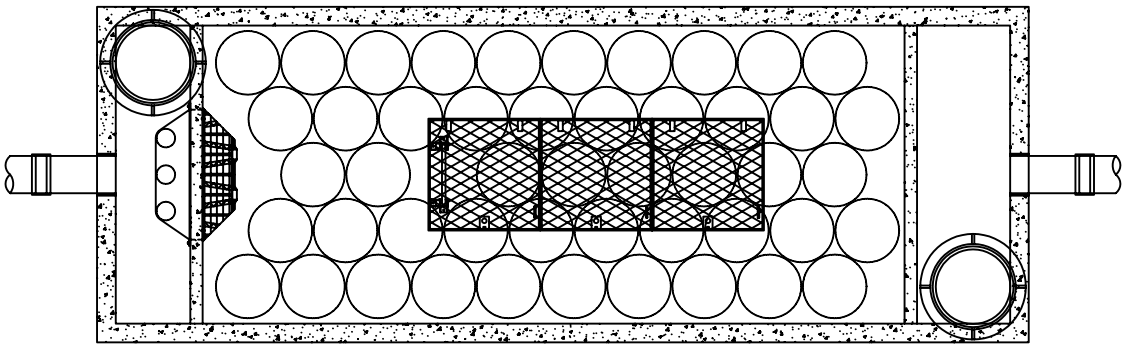

8' x 24' PRECAST STORMFILTER - PLAN VIEW (3/3)

1 - 3'X9' DOOR
2 - 24" ROUND CASTINGS

THE STORMWATER MANAGEMENT
StormFilter®
U.S. PATENT No. 5,322,629,
No. 5,707,527, No. 6,027,639
No. 6,649,048, No. 5,624,576,
AND OTHER U.S. AND FOREIGN
PATENTS PENDING

©2005 Stormwater360

Stormwater360™
A CONTECH Company
www.stormwater360.com

PRECAST STORMFILTER VAULTS
8' x 16' AND 8' x 18' - PLAN VIEWS
ACCESS SCHEMATIC

DRAWING 3
3/3

DATE: 11/29/05	SCALE: NONE	FILE NAME: KINGCOUNTY-ACCESS-SCH2	DRAWN: MJW	CHECKED: KT

KING COUNTY, WASHINGTON
SURFACE WATER DESIGN MANUAL

REFERENCE 8

PLAN REVIEW FORMS AND WORKSHEETS

8-A Technical Information Report (TIR) Worksheet

8-B Offsite Analysis Drainage System Table

8-C Water Quality Facility Sizing Worksheets

8-D Flow Control and Water Quality Facility Summary Sheet and Sketch

8-E CSWPP Worksheet Forms

8-F Adjustment Application and Process Guidelines

8-G Dedication and Indemnification Clause - Final Recording

8-H Bond Quantities Worksheet
See the current version at:
http://kingcounty.gov/depts/permitting-environmental-review/publications/forms/FormsByTitle.aspx#S .
Select "Site Improvement Bond Quantity Worksheet"

8-I Maintenance and Defect Agreement
For the current version, contact the Financial Guarantees Management Unit at the Department of Permitting and Environmental Services, (206) 296-6659

8-J Declaration of Covenant

8-K Drainage Release Covenant

8-L Drainage Easement

8-M Flow Control BMP Covenant and BMP Maintenance Instructions (Recordable format)

8-N Impervious Surface Limit Covenant

8-O Clearing Limit Covenant

8-P River Protection Easement

8-Q Leachable Metals Covenant

KING COUNTY, WASHINGTON
SURFACE WATER DESIGN MANUAL

REFERENCE 8-A

TECHNICAL INFORMATION REPORT (TIR) WORKSHEET

TECHNICAL INFORMATION REPORT (TIR) WORKSHEET

Part 1 PROJECT OWNER AND PROJECT ENGINEER

Project Owner _____

Phone _____

Address _____

_____

Project Engineer _____

Company _____

Phone _____

Part 2 PROJECT LOCATION AND DESCRIPTION

Project Name _____

DPER Permit # _____

Location Township _____

Range _____

Section _____

Site Address _____

_____

Part 3 TYPE OF PERMIT APPLICATION

- ❑ Landuse (e.g.,Subdivision / Short Subd. / UPD)
- ❑ Building (e.g.,M/F / Commercial / SFR)
- ❑ Clearing and Grading
- ❑ Right-of-Way Use
- ❑ Other _____

Part 4 OTHER REVIEWS AND PERMITS

- ❑ DFW HPA
- ❑ COE 404
- ❑ DOE Dam Safety
- ❑ FEMA Floodplain
- ❑ COE Wetlands
- ❑ Other _____
- ❑ Shoreline Management
- ❑ Structural Rockery/Vault/_____
- ❑ ESA Section 7

Part 5 PLAN AND REPORT INFORMATION

Technical Information Report

Type of Drainage Review (check one):

- ❑ Full
- ❑ Targeted
- ❑ Simplified
- ❑ Large Project
- ❑ Directed

Date (include revision dates): _____

_____

Date of Final: _____

Site Improvement Plan (Engr. Plans)

Plan Type (check one):

- ❑ Full
- ❑ Modified
- ❑ Simplified

Date (include revision dates): _____

_____

Date of Final: _____

Part 6 SWDM ADJUSTMENT APPROVALS

Type (circle one): Standard / Experimental / Blanket

Description: (include conditions in TIR Section 2)

_____

_____

_____

Approved Adjustment No. _____ Date of Approval: _____

TECHNICAL INFORMATION REPORT (TIR) WORKSHEET

Part 7 MONITORING REQUIREMENTS

Monitoring Required: Yes / No

Start Date: _____

Completion Date: _____

Describe: _____

_____

_____

Re: KCSWDM Adjustment No. _____

Part 8 SITE COMMUNITY AND DRAINAGE BASIN

Community Plan : _____

Special District Overlays: _____

Drainage Basin: _____

Stormwater Requirements: _____

Part 9 ONSITE AND ADJACENT SENSITIVE AREAS

- ❑ River/Stream _____
- ❑ Lake _____
- ❑ Wetlands _____
- ❑ Closed Depression _____
- ❑ Floodplain _____
- ❑ Other _____

_____

- ❑ Steep Slope _____
- ❑ Erosion Hazard _____
- ❑ Landslide Hazard _____
- ❑ Coal Mine Hazard _____
- ❑ Seismic Hazard _____
- ❑ Habitat Protection _____
- ❑ _____

Part 10 SOILS

Soil Type	Slopes	Erosion Potential
_____	_____	_____
_____	_____	_____
_____	_____	_____
_____	_____	_____

- ❑ High Groundwater Table (within 5 feet)
- ❑ Other _____
- ❑ Sole Source Aquifer
- ❑ Seeps/Springs

❑ Additional Sheets Attached

TECHNICAL INFORMATION REPORT (TIR) WORKSHEET

Part 11 DRAINAGE DESIGN LIMITATIONS	
REFERENCE	LIMITATION / SITE CONSTRAINT
❑ Core 2 – Offsite Analysis_____	_____
❑ Sensitive/Critical Areas_____	_____
❑ SEPA_____	_____
❑ LID Infeasibility_____	_____
❑ Other_____	_____
❑ _____	_____
❑ Additional Sheets Attached	

Part 12 TIR SUMMARY SHEET (provide one TIR Summary Sheet per Threshold Discharge Area)	
Threshold Discharge Area: (name or description)	
Core Requirements (all 8 apply):	
Discharge at Natural Location	Number of Natural Discharge Locations:
Offsite Analysis	Level: 1 / 2 / 3 dated:_____
Flow Control (include facility summary sheet)	Level: 1 / 2 / 3 or Exemption Number _____ Flow Control BMPs _____
Conveyance System	Spill containment located at: _____
Erosion and Sediment Control / Construction Stormwater Pollution Prevention	CSWPP/CESCL/ESC Site Supervisor: _____ Contact Phone: _____ After Hours Phone: _____
Maintenance and Operation	Responsibility (circle one): Private / Public If Private, Maintenance Log Required: Yes / No
Financial Guarantees and Liability	Provided: Yes / No
Water Quality (include facility summary sheet)	Type (circle one): Basic / Sens. Lake / Enhanced Basic / Bog or Exemption No. _____ Landscape Management Plan: Yes / No
Special Requirements (as applicable):	
Area Specific Drainage Requirements	Type: CDA / SDO / MDP / BP / LMP / Shared Fac. / None Name: _____
Floodplain/Floodway Delineation	Type (circle one): Major / Minor / Exemption / None 100-year Base Flood Elevation (or range): _____ Datum:
Flood Protection Facilities	Describe:

TECHNICAL INFORMATION REPORT (TIR) WORKSHEET

Part 12 TIR SUMMARY SHEET (provide one TIR Summary Sheet per Threshold Discharge Area)	
Source Control (commercial / industrial land use)	Describe land use: Describe any structural controls:
Oil Control	High-use Site: Yes / No Treatment BMP: _____ Maintenance Agreement: Yes / No with whom? _____
Other Drainage Structures	
Describe:	

Part 13 EROSION AND SEDIMENT CONTROL REQUIREMENTS		
MINIMUM ESC REQUIREMENTS DURING CONSTRUCTION		MINIMUM ESC REQUIREMENTS AFTER CONSTRUCTION
❑ Clearing Limits		❑ Stabilize exposed surfaces
❑ Cover Measures		❑ Remove and restore Temporary ESC Facilities
❑ Perimeter Protection		❑ Clean and remove all silt and debris, ensure operation of Permanent Facilities, restore operation of Flow Control BMP Facilities as necessary
❑ Traffic Area Stabilization		❑ Flag limits of SAO and open space preservation areas
❑ Sediment Retention		❑ Other _____
❑ Surface Water Collection		
❑ Dewatering Control		
❑ Dust Control		
❑ Flow Control		
❑ Protection of Flow Control BMP Facilities (existing and proposed)		
❑ Maintain BMPs / Manage Project		

Part 14 STORMWATER FACILITY DESCRIPTIONS (Note: Include Facility Summary and Sketch)				
Flow Control	Type/Description		Water Quality	Type/Description
❑ Detention	_____		❑ Vegetated Flowpath	_____
❑ Infiltration	_____		❑ Wetpool	_____
❑ Regional Facility	_____		❑ Filtration	_____
❑ Shared Facility	_____		❑ Oil Control	_____
❑ Flow Control BMPs	_____		❑ Spill Control	_____
❑ Other	_____		❑ Flow Control BMPs	_____
			❑ Other	_____

TECHNICAL INFORMATION REPORT (TIR) WORKSHEET

Part 15 EASEMENTS/TRACTS		Part 16 STRUCTURAL ANALYSIS
❑ Drainage Easement		❑ Cast in Place Vault
❑ Covenant		❑ Retaining Wall
❑ Native Growth Protection Covenant		❑ Rockery > 4' High
❑ Tract		❑ Structural on Steep Slope
❑ Other _____		❑ Other _____

Part 17 SIGNATURE OF PROFESSIONAL ENGINEER
I, or a civil engineer under my supervision, have visited the site. Actual site conditions as observed were incorporated into this worksheet and the attached Technical Information Report. To the best of my knowledge the information provided here is accurate.
_____
Signed/Date

KING COUNTY, WASHINGTON
SURFACE WATER DESIGN MANUAL

REFERENCE 8-B

OFFSITE ANALYSIS DRAINAGE SYSTEM TABLE

OFF-SITE ANALYSIS DRAINAGE SYSTEM TABLE
KING COUNTY SURFACE WATER DESIGN MANUAL, CORE REQUIREMENT #2

Basin:		**Subbasin Name:**		**Subbasin Number:**		**Date**	

Symbol	Drainage Component Type, Name, and Size	Drainage Component Description	Slope	Distance from site discharge	Existing Problems	Potential Problems	Observations of field inspector, resource reviewer, or resident
see map	Type: sheet flow, swale, stream, channel, pipe, pond, flow control/wq BMP; Size: diameter, surface area	drainage basin, vegetation, cover, depth, type of sensitive area, volume	%	¼ ml = 1,320 ft.	constrictions, under capacity, ponding, overtopping, flooding, habitat or organism destruction, scouring, bank sloughing, sedimentation, incision, other erosion		tributary area, likelihood of problem, overflow pathways, potential impacts

KING COUNTY, WASHINGTON
SURFACE WATER DESIGN MANUAL

REFERENCE 8-C

WATER QUALITY FACILITY SIZING WORKSHEETS

WETPOND SIZING WORKSHEET

for Rectangular Wetponds

Project Name: _____

METHODS OF ANALYSIS (See SWDM Section 6.4.1)

Step 1) Determine volume factor, *f*

Basic size? f = 1 (unitless)

Large size? f = 1.5 (unitless)

Consult WQ requirements (Section 1.2.8) to determine if basic or large size needed

If using the 91% volume reported by the approved model, skip to *

See Section 6.2.1

Step 2) Determine weighted SCS curve number, *CN*

Weighted SCS curve number, CN _____ (unitless)

See Section 6.4.1.1

Step 3) Determine precipitation depth *P* for 6-mo 24-hr storm (SCS method)

Storm depth from isopluvial or local data, *or* _____ (in)

72% of 2-yr 24-hr storm depth (0.72 x 2-yr_____) = _____ (in)

See Section 6.2.1

Calculate runoff depth Q_d for developed tributary area

Potential detention of area, S = (1000/weighted CN) - 10 _____ (in)

CN from Step 2

$P \geq 0.2S \Rightarrow Q_d = (P-0.2S)^2 / (P+0.8S)$

$P < 0.2S \Rightarrow Q_d = 0$

Q_d = _____ (in)

P from Step 3

Step 4) Calculate Basic Volume V_b and required volume for developed tributary area

Total tributary area, A _____ (ac)

Areas used in Step 2

Basic Volume of the wetpool,

V_b = 3630 (cft/ac.in.) x Q_d (in) x A (ac) _____ (cf)

Q_d from Step 3

OR, if modeled,

* V_b = ***modeled*** 91% runoff volume _____ (cf)

From approved model

Required Volume of the wetpool = *f* x V_b _____ (cf)

Volume factor f from Step 1

Step 5) Determine wetpool dimensions (for rectangular pond)

See Section 6.4.1.2 for flowpath length considerations

a) *Determine geometry of first cell:*

Volume in first cell _____ (cf) *25-35% of total*

Depth ***h*** of first cell (minus sediment storage) _____ (ft) *See Section 6.4.1.2*

Determine first cell length at mid-depth:

Mid-depth surface area, $A_{mid} = V_{first\ cell} / h_{first\ cell}$ _____ (sf)

Side slope, Z: __(H):1(V) _____ (ft) *3:1 recommended*

Mid-width = (Average) Bottom width + 2(h/2 x Z) _____ (ft)

Assumes single inlet, see Section 6.4.1.2;

Mid-length = A_{mid} / Mid-width = _____ (ft) *Used to check L:W*

Determine area of first cell design maximum water surface, A_{top}: *(Rectangular pond)*

Side slope, Z: __(H):1(V) _____ (ft) *3:1 recommended*

Top width = (Average) Bottom width + 2(h x Z) _____ (ft)

Top length = Bottom length + 2(h x Z)

A_{top} = (Top width) x (Top Length) = _____ (sf)

b) *Determine geometry of second cell*

Volume in second cell _____ (cf) *Must be 65 - 75%*

Depth ***h*** of second cell _____ (ft) *See Section 6.4.1.2*

Determine cell length at mid-depth:

Mid-depth surface area, $A_{mid} = V_{second\ cell} / h_{second\ cell}$ _____ (sf)

Side slope, Z: __(H):1(V) _____ (ft) *3:1 recommended*

Mid-width = (Average) Bottom width + 2(h/2 x Z) _____ (ft)

Mid-length = A_{mid} / Mid-width = _____ (ft) *Used to check L:W*

Determine area of second cell design maximum water surface, A_{top} *(Rectangular pond)*

Side slope, Z: __(H):1(V) _____ (ft) *3:1 recommended*

Top width = (Average) Bottom width + 2(h x Z) _____ (ft)

Top length = Bottom length + 2(h x Z)

A_{top} = (Top width) x (Top Length) = _____ (sf)

c) *Geometry check:* overall pond L:W at mid-depth at least 3:1

Weighted Average pond width (mid-depth) _____ (ft)

[Σ(Cell A_{mid})(Cell Avg width) all cells]/[Σ(A_{mid} all cells)]

Cell 1 length (mid-depth) _____ (ft) *See Section 6.4.1.2 for flowpath length considerations*

Cell 2 length (mid-depth) _____ (ft)

Pond length (mid-depth) = cell 1 + 2 _____ (ft)

$L_{mid} : W_{mid}$ = _____

Step 6) Design rest of pond (see Criteria p. 6-73)

Internal berm
Inlet & Outlet
Primary overflow
Access

Other Design Details (Sections 6.2.2, 6.2.3, and 6.2.4)
- Sequence of Facilities
- Setbacks
- Sideslopes, fencing, embankment
- Liners

Total wetpond surface area estimate

Sum areas for design maximum water surface (all cells), internal berm, access ramp

= _____ (sf)

\+ _____ (sf)

\+ _____ (sf)

\+ _____ (sf)

= Total sf

Pond tract area will also include setbacks, access roads, 100-yr conveyance, etc.

WETVAULT SIZING WORKSHEET

Project Name: _____

METHODS OF ANALYSIS (See SWDM Section 6.4.2)

Step 1) Determine volume factor, *f*

Basic size? f = 1 (unitless)
Large size? f = 1.5 (unitless)

Consult WQ requirements (Section 1.2.8) to determine if basic or large size needed

If using the 91% volume reported by the approved model, skip to *

See Section 6.2.1

Step 2) Determine weighted SCS curve number, *CN*

Weighted SCS curve number, CN _____ (unitless)

See Section 6.4.1.1

Step 3) Determine precipitation depth *P* for 6-mo 24-hr storm (SCS method)

Storm depth from isopluvial or local data, *or* _____ (in)
72% of 2-yr 24-hr storm depth (0.72 x 2-yr_____) = _____ (in)

See Section 6.2.1

Calculate runoff depth Q_d for developed tributary area

Potential detention of area, S = (1000/weighted CN) - 10 _____ (in)

CN from Step 2

$P \geq 0.2S$ => $Q_d = (P-0.2S)^2 / (P+0.8S)$
$P < 0.2S$ => $Q_d = 0$ Q_d = _____ (in)

P from Step 3

Step 4) Calculate Basic Volume V_b and required volume for developed tributary area

Total tributary area, A _____ (ac)

Areas used in Step 2

Basic Volume of the wetpool,
V_b = 3630 (cft/ac.in.) x Q_d (in) x A (ac) _____ (cf)

Q_d from Step 3

OR, if modeled,
* V_b = ***modeled*** 91% runoff volume _____ (cf)

From approved model

Required Volume of the wetpool = *f* x V_b _____ (cf)

Volume factor f from Step 1

Step 5) Determine wetpool dimensions

a) *Determine geometry of first cell*

Volume in first cell _____ (cf)

Must be 25 - 35%

Depth ***h*** of first cell (minus sediment storage) _____ (ft)

See Section 6.4.1.2

Determine area at water surface = (Volume/***h***)

Atop = _____ (sf)

Find top dimensions by adjusting for shape geometrics

Dimensions of first cell: width= _____ (ft)
length = _____ (ft)

b) *Determine geometry of second cell*

Volume in second cell _____ (cf) *Must be 65 - 75%*

Depth ***h*** of second cell _____ (ft) *See Section 6.4.1.2*

Determine area at water surface = (Volume/***h***)

Atop = _____ (sf)

Dimensions of second cell: width= (ft) *Same as Cell 1*

length = _____ (ft)

c) *Geometry check:* overall pond L:W at mid depth at least 3:1

Cell 1 length (mid-depth) _____ (ft)

Cell 2 length (mid-depth) _____ (ft)

Vault length = cell 1 + 2 _____ (ft)

Vault width _____ (ft)

At mid-depth, $L_{mid} : W_{mid}$ = _____

Step 6) Design rest of vault (Section 6.4.2.1)

Internal baffle

Inlet & Outlet

Access (note 5'X10" access, grating and corner vent holes)

Effective impervious area (EIA) _____ *See Section 3.2.2.1*

Other Design Details (Sections 6.2.2, 6.2.3, and 6.2.4)

Sequence of Facilities

Setbacks

Sideslopes, fencing, embankment

SIZE SUMMARY: Surface area, change in elevation

Vault width _____ (ft)

Vault length _____ (ft)

Surface area _____ (sf)

Elevation change needed: _____ (ft)

BIOFILTRATION SWALE WORKSHEET

Project Name: _____

METHODS OF ANALYSIS (See SWDM Section 6.3.1.1)

Step 1) Calculate design flows

- *Biofiltration swales generally precede other water quality facilities (See menus in Section 6.1)*
- *Design flows depend on sequence with detention facility. (Section 6.2.1)*

Preceding detention Q_{wq} = modeled flow achieving 91% developed flow volume treated
Following detention Q_{wq} = 2-yr release rate from detention facility

If no high flow bypass provided:	$Q_{100\text{-}yr}$	_____	(cfs)	*See Section 6.3.1.1*
	$Q_{25\text{-}yr}$	_____	(cfs)	*See Section 3.2.2 Runoff Files Method*
	$Q_{2\text{-}yr}$	_____	(cfs)	"
Water quality design flow	Q_{wq}	_____	(cfs)	*Section 6.2.1 WQ Design Flows and Volumes*

Land Cover Areas and Soil Types *See Tables 3.2.2 B and 3.2.2.C*

Forest	☐ till	☐ outwash	_____	(acres)	*Areas draining to swale (Section 3.2.2)*
Pasture	☐ till	☐ outwash	_____	(acres)	"
Grass	☐ till	☐ outwash	_____	(acres)	"
Wetland			_____	(acres)	"
Impervious			_____	(acres)	"

Time Step: 15-min *15-min* *Required "15 min" (Section 6.2.1)*

Step 2) Calculate swale bottom width

$$b = \frac{Q_{wq}\, n_{wq}}{1.49\, y^{1.67}\, s^{0.5}}$$

b=	bottom width of swale	_____	(ft)	*Simplified Manning's formula*
Q_{wq} =	water quality design flow	_____	(cfs)	*Listed in Step 1*
n_{wq} =	Manning's roughness coefficient	*0.20*		*Required 0.20, shallow flow conditions*
y =	design flow depth	_____	(ft)	*Mowed 2 in. (0.17ft), Rural 4 in. (0.33ft)*
s =	longitudinal slope, along flow	_____	(feet/ft)	

- If the bottom width is calculated to be between 2 and 10 feet, proceed to Step 3.
- If bottom width is less than 2 feet, increase width to 2 feet and recalculate the design flow depth (y).
- If bottom width is more than 10 feet, increase longitudinal slope (s), increase design flow depth (y), install flow divider and flow spreader, or relocate swale after detention facility

Step 3) Determine design flow velocity

$V_{wq} = Q_{wq}/A_{wq}$	design flow velocity	_____	(fps)	*Flow Continuity Equation, Q_{wq} from Step 1*
$A_{wq} = by+Zy^2$		_____	(sf)	*Cross-sectional area at design depth*
Z =	side slope length per unit height	_____	(feet/ft)	*Select now*

- If the velocity exceeds 1.0 fps, go back to Step 2 and modify longitudinal slope, bottom width, or depth.
- If the velocity is less than 1.0 fps, proceed to Step 4.

Step 4) Calculate swale length

$L = 540V_{wq}$	= swale length	_____	(ft)	
540 =	hydraulic residence time	_____	(s)	
V_{wq} =	design flow velocity	_____	(fps)	*Calculated in Step 3*

- If the length is less than 100 feet, increase the length to 100 feet, leaving the bottom width unchanged.
- If the swale length can be accommodated on the site, proceed to Step 6.
- If the length is too long for the site, proceed to Step 5.

Step 5) Adjust swale layout to fit on site.

Increase initial bottom width and reduce initial swale length to provide an equivalent top area.

Required area $A_{top} = (b_i+b_{slope})L_i = (b_f+b_{slope})L_f$		_____	(sf)	*Calculate top area at WQ design depth*
b_f =	increased bottom width	_____	(ft)	*Select now; see Sections 6.3.1.2 and 6.3.2.2*
b_{slope} =	2Zy (ft) top width above sides	_____	(ft)	*for max. allowable width*
L_f =	reduced length, $A_{top} / (b_f+b_{slope})$	_____	(ft)	*Select now; Required minimum 100 ft*

- Go to Step 3 and recalculate design flow velocity (v) using b_f.
- **Recalculate to assure the 9 minute retention**

Step 6) Provide conveyance capacity for flows higher than Q_{wq}

Meet conveyance requirements of Section 1.2.4 and check conveyance and velocity of high flows.

A)	Q_c =	$(1.49/n_c)\ A_c\ R_c^{0.67}\ s^{0.5}$	_____	(cfs)	*Manning's Eq.; 100-yr or 25-yr flow in Step 1*
	n_c =	Manning's roughness coefficient	_____		*Manning's "n" from Table 4.4.1 B*
	A_c =	$by_c + Zy_c^2$	_____	(sf)	*Cross sectional area (trapezoidal section)*
	R_c =	$A_c / (b+2y_c (Z^2+1)^{0.5})$	_____	(ft)	*Hydraulic Radius (trapezoidal section)*
	s =	longitudinal slope, along flow	_____	(ft/ft)	*Selected in Step 2*
	y_c =	depth of 25-yr or 100-yr flows	_____	(ft)	*Calculate now*

- Check velocity of 100-yr peak flow...

B) $V_{100} = Q_{100} / A_{100}$ _____ (fps)

- If V_{100} exceeds 3.0 fps, return to Step 2 and increase the bottom width or flatten slope.

Size Summary (Plan Area)

- *Land area is needed for the channel (top width including freeboard and any low-flow drain width), access, setbacks, and, if necessary, area to convey high flows.*
- *Longitudinal cross section includes conveyance depth y_c, swale plan length L_{plan} (channel elevation drop / slope), and, if necessary, underdrain and high flows.*

L_{plan} (channel elevation drop (ft) / slope) =	_____	(ft)	*From Steps 3, 4 and 6*
WS plan area $A_{plan} = L_{plan} \times (b + 2Zy_c)$ =	_____	(sf)	*y_c from Step 6*

OTHER CRITERIA (Section 6.3.1.2)

Swale Geometry	Setbacks (Section 6.2.3)	Underdrains
Water Depth	Soil and plantings	Swale Divider
Flow Velocity, Energy Dissipation and Flow Spreading	Liners (Section 6.2.4)	Access

STORMWATER WETLAND SIZING WORKSHEET

Project Name: _____

METHODS OF ANALYSIS (See SWDM Section 6.4.3)

Step 1) Determine volume factor *f*.

Use Basic size f = 1 *See WQ requirements (Section 1.2.8) and Section 6.4.3.1*

If using the 91% volume reported by the approved model, skip to * *See Section 6.2.1*

Step 2) Determine weighted SCS curve number, *CN*

Weighted SCS curve number, CN _____ (unitless) *See Section 6.4.1.1*

Step 3) Determine precipitation depth *P* for 6-mo 24-hr storm (SCS method)

Storm depth from isopluvial or local data, *or* _____ (in) *See Section 6.2.1*

72% of 2-yr 24-hr storm depth (0.72 x 2-yr_____) = _____ (in)

Calculate runoff depth Q_d for developed tributary area

Potential detention of area, S = (1000/weighted CN) - 10 _____ (in) *CN from Step 2*

$P \geq 0.2S \Rightarrow Q_d = (P-0.2S)^2 / (P+0.8S)$

$P < 0.2S \Rightarrow Q_d = 0$ Q_d = _____ (in) *P from Step 3*

Step 4) Calculate Basic Volume V_b and required volume for developed tributary area

Total tributary area, A _____ (ac) *Areas used in Step 2*

Basic Volume of the wetpool,

V_b = 3630 (cft/ac.in.) x Q_d (in) x A (ac) _____ (cf) *Q_d from Step 3*

OR, if modeled,

* V_b = ***modeled*** 91% runoff volume _____ (cf) *From approved model*

Required Volume of the wetpool = *f* x V_b _____ (cf) *Volume factor f=1 from Step 1*

Step 5) Calculate required wetland surface area

$A_{top,total} = V_b / 3$ (total surface area of both cells) _____ (sf)

template V_b = _____ (cf) *From Step 4*

$A_{top, total}$ = _____ (sf) *"Sizing" depth is 3 ft*

Step 6) Determine wetland cell dimensions *(Same as Steps 6, 7 & 8, KCSWDM 6.4.3.1)*

a) *Determine geometry of first cell*

Set volume of first cell equal to V_r _____ (cf) *From Step 3*

Depth ***h*** 1st cell (minus sediment storage) _____ (ft) *Note actual cell depth may be from 4 to 8 ft*

Determine first cell surface area at mid-depth:

Mid-depth surface area, $A_{mid} = V_{first\ cell} / h_{first\ cell}$ _____ (sf)

Find mid-depth dimensions by adjusting for shape geometrics

Side slope, Z: __(H):1(V)	_____	(ft)	*3:1 recommended*
Mid-width = (Avg) Bottom width + 2(h/2 x Z)	_____	(ft)	*Assumes single inlet, see Section 6.4.1.2;*
Mid-length = A_{mid} / Mid-width =	_____	(ft)	*Used to check L:W*

Find top dimensions by adjusting for shape geometrics

Top width W_{top} = (Avg) mid-width + 2(h/2 x Z)	_____	(ft)	*(for Rectangular facility)*
Top length L_{top} = Mid-length + 2(h/2 x Z)	_____	(ft)	

Determine first cell surface area at design maximum water surface:

$A_{top1} = A_{mid} + (\boldsymbol{h}/2 \times Z \times \text{perimeter}_{mid})$ =	_____	(sf)	*General equation*
or, $A_{top1} = A_{mid} + (\boldsymbol{h} \times Z \times (L_{mid} + W_{mid}))$ =	_____	(sf)	*(for Rectangular facility)*
or, $A_{top1} = (L_{top} \times W_{top})$ =	_____	(sf)	

b) *Determine geometry of second cell*

Wetland surface area $A_{top,total}$	_____	(sf)	*From Step 5*
Surface area of second cell = $A_{top,total} - A_{top1}$	_____	(sf)	
Depth ***h*** of second cell	varies, 1.5' avg		*See Table 6.4.3.A and Criteria #8, p.6-90*

Step 7) Choose plants for wetland cell

See recommendations in Table 6.4.1.A, p. 6-75

Step 8) Design rest of pond (See p. 6.4.3.2 for Criteria)

Internal berm	Other Design Details (Sections 6.2.2, 6.2.3, and 6.2.4)
Inlet & Outlet	Sequence of Facilities
Primary overflow	Setbacks
Access	Sideslopes, fencing, embankment
	Liners

Total stormwater wetland surface area estimate

Sum areas for design maximum water surface (all cells), internal berm, access ramp

=	_____	(sf)
+	_____	(sf)
+	_____	(sf)
+	_____	(sf)
=	_____	Total sf

Pond tract area will also include setbacks, access roads, 100-yr conveyance, etc.

BAFFLE OIL/WATER SEPARATOR WORKSHEET

Project Name: _____

METHODS OF ANALYSIS (See SWDM Section 6.6.2.1)

Step 1) Calculate design flows (must be designed as an *off-line* facility)

Tributary area	_____	(sf)	*See Section 6.2.1 WQ Design Flows and Volumes*
Water quality **off-line** design flow, Q_{wq}	_____	(cfs)	

Step 2) Calculate the minimum vertical cross-sectional area

$A_c = Q_{wq} / V_H$ (Required: $V_H = 15V_T$)

Q_{wq} = water quality design flow	_____	(cfs)	*From Step 1*
V_T = oil droplet rise rate	0.033	(fpm)	*Use 0.033 fpm or justify alt. value*
V_H = design horizontal velocity	0.008	(fps)	$V_H = 15V_T$; *for* V_T = .033 *fpm,* V_H = ***0.008 fps***
A_c = minimum cross-sectional area	_____	(sf)	

Step 3) Calculate the width and depth of the vault

$D = A_c / W$

W = width of vault	_____	(ft)	*Required* $6' \le W \le 20'$
A_c = minimum cross-sectional area	_____	(sf)	*From Step 2*
D = maximum depth	_____	(ft)	*Required* $3' \le D \le 8'$ *per ECY*

The computed depth D must meet a depth-to-width ratio r of between 0.3 and 0.5

Note: $D = (rA_c)^{0.5}$

r = depth-to-width ratio

W = D/r

CHECK: Design D/W = _____

If $0.3 \le D/W \le 0.5$*, OK; if not, revise D, W*

Step 4) Calculate the length of the vault

$L = FD (V_H/V_T)$

L =	Length of vault		
V_H =	horizontal velocity (fpm)		*Vh/Vt = 15, required*
V_T =	oil droplet rise rate (fpm)		
D =	depth	_____ (ft)	*From Step 3*
F=	turbulence and short-circuiting factor	1.64	*F = 1.64, required (Fig. 6.6.2.A, using* V_H/V_T *= 15)*

Therefore: L= 1.64 x 15 x D L = _____ (ft)

Step 5) Check the separator's length-to-width ratio and forebay length.

Vault L/W =	_____		*Vault L/W must be 5 or greater*
Length of forebay	_____	(ft)	
$L_{forebay} / L_{vault}$ =	_____		$L_{forebay}$ *must be approx.* $L_{vault}/3$

Step 6) Check that the minimum horizontal surface area A_H criterion is satisfied

$A_H = FQ_{wq} / V_t$; Required: $A_H \leq (L \times W)_{design}$

Q_{wq} =		_____ (cfs)	*From Step 1*
A_H =	$(1.64 \times Q_{wq} / 0.00055)$	_____ (sf)	*From Steps 4 and 2, V_t in fps*
Design L x W =		_____ (sf)	*Required: $A_H \leq (L \times W)_{design}$*

Step 7) Compute and check the horizontal surface area of the vault forebay.

This area must be greater than 20 square feet per 10,000 square feet of tributary impervious area

L =	length of vault	_____ (ft)	*Step 4*
L_F =	length of forebay	_____ (ft)	*Step 5*
W =	width of vault	_____ (ft)	*Step 3*
$A_{F,\ design}$	forebay area = L_F x W	_____ (sf)	
A_{TI} =	tributary impervious area	(sf)	

Required: $A_F : A_{TI} > 1:500$, *or*

Required min. area for $A_F = (20 \times A_{TI} / 10{,}000)$	_____ (sf)	*If < Design forebay area, OK*
$A_{F,\ design} : A_{TI}$ =	_____ : 500	*If > 1:500, OK*

Step 8) Design the flow splitter and high-flow bypass.

See Section 6.2.5 for information on flow splitter design.

OTHER CRITERIA (Section 6.6.2.2)

General siting before other stormwater facilities
Baffle requirements
Inlet & outlet
Material requirements
Maintenance access (also see Section 5.3.3.1)

FILTER STRIP WORKSHEET

Project Name: _____

METHODS OF ANALYSIS (See SWDM Section 6.3.4)

Step 1) Calculate design flows

Filter strips usually precede other water quality facilities (See menus in Section 6.1)

Two-year flow	$Q_{2\text{-}yr}$	_____	(cfs)	*Section 6.2.1 WQ Design Flows*
Water quality design flow	Q_{wq}	_____	(cfs)	"

Step 2) Calculate design flow depth

Q_{wq} =	water quality design flow	_____	(cfs)	*Calculated in Step 1*
n_{wq} =	Manning's roughness coefficient	_____		*Use 0.35 or 0.45, see p. 6-62*
W =	width of strip along imperv.	_____	(ft)	*Determine now*
s =	longitudinal slope along path	_____	(feet/ft)	*Determine now*

$$d_f = \left| \frac{Q_{wq}\, n_{wq}}{1.49\, Ws^{0.5}} \right|^{0.6}$$

design flow depth, d_f = _____ (ft) *Manning's formula, re-arranged*

- If the design flow depth is greater than I inch (0.083 ft), the flow must reduced, the strip width must be increased, or a different WQ facility must be used.

CHECK: _____ (ft) *< 0.083 ft, OK*

Step 3) Calculate the design flow velocity through the strip

Q_{wq} =	_____	(cfs)	*From Step 1*
W =	_____	(ft)	*From Step 2*
d_f =	_____	(ft)	*From Step 2*
$V_{wq} = Q_{wq} / Wd_f$	_____	(fps)	*Flow Continuity Eq. w/ Wd_f for A*

- If V_{wq} exceeds 0.5 fps, a filter strip may not be used. Redesign site to use a gentler longitudinal slope, or use another WQ facility.

CHECK: _____ (fps) *< 0.5 fps, OK*

Step 4) Calculate length of filter strip

hydraulic residence time =	540	(s)	*Required 9 minutes*
design flow velocity, V_{wq} =	_____	(fps)	*Calculated in Step 3*
$L = 540\, V_{wq}$	_____	(ft)	

Size Summary

Land area is needed for the strip, access, & area outside the treatment area to convey high flows

Other Criteria

Flow spreading & energy dissipation
Access
Soil amendment
Planting requirements
Liners (Section 6.2.4)
Recommended design features (Section 6.3.4.2)

KING COUNTY, WASHINGTON
SURFACE WATER DESIGN MANUAL

REFERENCE 8-D

FLOW CONTROL AND WATER QUALITY FACILITY SUMMARY SHEET AND SKETCH

STORMWATER FACILITY SUMMARY SHEET

(provide one Stormwater Facility Summary Sheet per *Natural Discharge Location)*

DPER Permit No. _____
Date _____
NPDES Permit No. _____

OVERVIEW:

Project Name

Project Location

Parcel No. _____
Retired Parcel No. _____

Downstream Drainage Basins:

Major Basin Name _____

Immediate Basin Name_____

Project includes Landscape Management Plan? yes ☐ no ☐
(include copy with TIR as Appendix)

Declarations of Covenant	Recording No.
Leachable Metals	
Impervious Surface Limit	
Flow Control BMPs	
Clearing Limit	
Drainage Facility	
Landscape Management Plan	

GENERAL FACILITY INFORMATION:

Detention		Infiltration		Water Quality		Flow Control Performance Std
Type	***# of***	***Type***	***# of***	***Type***	***# of facilities***	
Ponds	_____	Ponds	_____	Ponds	_____	☐ Basic
Vaults	_____	Tanks	_____	Vaults	_____	☐ Conservation
Tanks	_____	Trenches	_____	Tanks	_____	☐ Flood Problem

If no flow control facility, check one:

- ☐ Project qualifies for KCSWDM Exemption (KCSWDM 1.2.3):
  - ☐ Basic Exemption
  - ☐ Impervious Surface Exemption for Transportation Redevelopment projects
  - ☐ Cost Exemption for Parcel Redevelopment projects
  - ☐ Direct Discharge Exemption
  - ☐ Other _____
- ☐ Project qualifies for 0.1 cfs Exception per KCSWDM 1.2.3
- ☐ No flow control required per approved KCSWDM Adjustment No. _____
- ☐ Flow control provided in regional/shared facility per approved approved KCSWDM Adjustment No. _____
  Shared Facility Name/Location:_____
- ☐ No flow control required (other, provide justification):
  _____

TREATMENT SUMMARY FOR TOTAL IMPERVIOUS SURFACES

(Applies to Commercial parcels only)	Area	% of Total
Total Acreage **(ac)**		-----
Total Impervious Acreage **(ac)**		
Total impervious surface served by flow control facility(ies) **(sq ft)**		
Impervious surface served by flow control facility(ies) designed 1990 or later **(sq ft)**		
Impervious surface served by pervious surface absorption **(sq ft)**		
Impervious surface served by approved water quality facility(ies) **(sq ft)**		

PROVIDE FACILITY DETAILS AND FACILITY SKETCH FOR EACH FACILITY ON REVERSE. USE ADDITIONAL SHEETS AS NEEDED FOR ADDITIONAL FACILITIES

STORMWATER FACILITY SUMMARY SHEET DPER Permit No. _____

(provide one Stormwater Facility Summary Sheet per *Natural Discharge Location)*

Project Name	**Downstream Drainage Basins:**
Project Location	Major Basin Name_____ Immediate Basin Name_____

FLOW CONTROL FACILITY: Basin:

Facility Name/Number _____		☐ New Facility	Project Impervious Acres Served _____
Facility Location _____		☐ Existing Facility	% of Total Project Impervious Acres Served _____
UIC? ☐ yes ☐ no **UIC Site ID:**			No. of Lots Served _____
Live Storage Volume _____	☐ cu.ft. ☐ ac.ft.	Live Storage Depth (ft) _____	Volume Factor of Safety _____

Control Structure location: _____

Type of Control Structure:
- ☐ Riser in vault
- ☐ Riser in Type II CB
- ☐ Weir in Type II CB

No. of Orifices/Restrictions _____

Size of Orifice/Restriction (in.) (numbered starting with lowest orifice): (inches in decimal format)
- No.1 _____
- No.2 _____
- No.3 _____
- No.4 _____

Dam Safety Regulations (WA State Dept of Ecology):

Reservoir Volume above natural grade		☐ cu.ft. ☐ ac.ft.
Depth of Reservoir above natural grade		(ft)

WATER QUALITY FACILITIES

Indicate no. of water quality facilities/BMPs for each type:

_____ Flow dispersion

_____ Filter strip

_____ Biofiltration swale ☐ *regular,* ☐ *wet or* ☐ *continuous inflow*

_____ Wetvault ☐ *combined w/detention*

_____ Wetpond ☐ *basic* ☐ *large* ☐ *combined w/detention*

_____ Pre-settling pond

_____ Stormwater wetland

_____ Sand filter ☐ *basic* ☐ *large* ☐ *regular* ☐ *linear* ☐ *vault*

Sand bed depth (inches) _____

- Is facility lined? ☐ yes ☐ no If so, what marker is used above liner? _____

Design Information

Water Quality design flow (cfs)	
Water Quality treated volume (sandfilter) (cu.ft.)	
Water Quality storage volume (wetpool) (cu.ft.)	

☐ **Landscape management plan** ☐ **Farm management plan**

_____ High flow bypass structure (e.g., flow-splitter catch basin)

_____ Oil/water separator ☐ *baffle* ☐ *coalescing plate*

_____ Storm filter

_____ Pre-settling structure (Manufacturer:_____)

_____ Catch basin inserts (Manufacturer:_____)

_____ Source controls_____

Facility Summary Sheet Sketch: All detention, infiltration and water quality facilities must include a detailed sketch (11"x17" reduced size plan sheets preferred).

KING COUNTY, WASHINGTON
SURFACE WATER DESIGN MANUAL

REFERENCE 8-E

CSWPP WORKSHEET FORMS

ESC MAINTENANCE REPORT

Performed By: _____
Date: _____
Project Name: _____
DPER Permit #: _____

Clearing Limits

Damage	OK ____	Problem
Visible	OK ____	Problem
Intrusions	OK ____	Problem
Other	OK ____	Problem

Mulch

Rills/Gullies	OK ____	Problem
Thickness	OK ____	Problem
Other	OK ____	Problem

Nets/Blankets

Rills/Gullies	OK ____	Problem
Ground Contact	OK ____	Problem
Other	OK ____	Problem

Plastic

Tears/Gaps	OK ____	Problem
Other	OK ____	Problem

Seeding

Percent Cover	OK ____	Problem
Rills/Gullies	OK ____	Problem
Mulch	OK ____	Problem
Other	OK ____	Problem

Sodding

Grass Health	OK ____	Problem
Rills/Gullies	OK ____	Problem
Other	OK ____	Problem

Perimeter Protection including Silt Fence

Damage	OK ____	Problem
Sediment Build-up	OK ____	Problem
Concentrated Flow	OK ____	Problem
Other	OK ____	Problem

Flow Control BMP protection

Damage	OK ____	Problem
Sedimentation	OK ____	Problem
Concentrated Flow	OK ____	Problem
Rills/Gullies	OK ____	Problem
Intrusions	OK ____	Problem
Other	OK ____	Problem

Brush Barrier

Damage	OK ____	Problem
Sediment Build-up	OK ____	Problem
Concentrated Flow	OK ____	Problem
Other	OK ____	Problem

Vegetated Strip

Damage	OK ____	Problem
Sediment Build-up	OK ____	Problem
Concentrated Flow	OK ____	Problem
Other	OK ____	Problem

Construction Entrance

Dimensions	OK ____	Problem
Sediment Tracking	OK ____	Problem
Vehicle Avoidance	OK ____	Problem
Other	OK ____	Problem

Wheel Wash

Dimensions	OK	Problem
Sed build up or tracking	OK…….	Problem
Other	OK	Problem

Construction Road

Stable Driving Surf.	OK ____	Problem
Vehicle Avoidance	OK ____	Problem
Other	OK ____	Problem

Sediment Trap/Pond

Sed. Accumulation	OK ____	Problem
Overtopping	OK ____	Problem
Inlet/Outlet Erosion	OK ____	Problem
Other	OK ____	Problem

Catch Basin/Inlet Protection

Sed. Accumulation	OK ____	Problem
Damage	OK ____	Problem
Clogged Filter	OK ____	Problem
Other	OK ____	Problem

Interceptor Dike/Swale

Damage	OK ____	Problem
Sed. Accumulation	OK ____	Problem
Overtopping	OK ____	Problem
Other	OK ____	Problem

Pipe Slope Drain

Damage	OK ____	Problem
Inlet/Outlet	OK ____	Problem
Secure Fittings	OK ____	Problem
Other	OK ____	Problem

Ditches

Damage	OK ____	Problem
Sed. Accumulation	OK ____	Problem
Overtopping	OK ____	Problem
Other	OK ____	Problem

Outlet Protection

Scour	OK ____	Problem
Other	OK ____	Problem

Level Spreader

Damage	OK ____	Problem
Concentrated Flow	OK ____	Problem
Rills/Gullies	OK ____	Problem
Sed. Accumulation	OK ____	Problem
Other	OK ____	Problem

Dewatering Controls

Sediment	OK..	Problem

Dust Control

Palliative applied	OK	Problem

Miscellaneous

Wet Season Stockpile	OK ____	Problem
Other	OK ____	Problem

Comments:

Actions Taken:

Problems Unresolved:

BMP Implementation	Completed by:_____ Title:_____ Date:_____

Develop a plan for implementing each BMP. Describe the steps necessary to implement the BMP (i.e., any construction or design), the schedule for completing those steps (list dates), and the person(s) responsible for implementation.

BMPs	Description of Action(s) Required for Implementation	Scheduled Milestone and Completion Date(s)	Person Responsible for Action
Good Housekeeping	1.		
	2.		
	3		
Preventive Maintenance	1.		
	2.		
	3.		
	4.		
Spill Prevention and Emergency Cleanup	1.		
	2.		
	3.		
Inspections	1.		
	2.		
	3.		

BMPs	Description of Action(s) Required for Implementation	Schedule Milestone and Completion Date(s)	Person Responsible for Action
Source Control BMPs	**1.**		
	2.		
	3		
	4.		
	5.		
	6.		
	7.		
	8.		
Treatment BMPs	**1.**		
	2.		
	3.		
	4.		
Emerging technologies	**1.**		
	2.		
Flow Control BMPs	**3.**		
	4.		

Pollution Prevention Team	**Completed by:** _____ **Title:** _____ **Date:** _____
Responsible Official:_____ Team Leader:_____ Responsibilities: _____ _____ _____	Title:_____ Office Phone:_____ Cell Phone #:_____ Pager #:_____
(1)_____ Responsibilities: _____ _____ _____	Title:_____ Office Phone:_____ Pager #:_____ Cell Phone:_____
(2)_____ Responsibilities: _____ _____ _____	Title:_____ Office Phone:_____ Pager #:_____ Cell Phone #:_____

Employee Training	Completed by:_____ Title:_____ Date:_____		
Describe the annual training of employees on the SWPPP, addressing spill response, good housekeeping, and material management practices.			
Training Topics **1.) LINE WORKERS**	**Brief Description of Training Program/Materials (e.g., film, newsletter course)**	**Schedule for Training (list dates)**	**Attendees**
Spill Prevention and Response			
Good Housekeeping			
Material Management Practices			
2.) P2 TEAM:			
SWPPP Implementation			
Monitoring Procedures			

List of Significant Spills and Leaks	Completed by:_____ Title:_____ Date:_____

List all spills and leaks of toxic or hazardous pollutants that were significant but are not limited to, release of oil or hazardous substances in excess of reportable quantities. Although not required, we suggest you list spills and leaks of non-hazardous materials.

Date (month/day/year)	Location (as indicated on site map)	Description				Response Procedure		Preventive Measure Taken
		Type of Material	Quantity	Source, If Known	Reason for Spill/Leak	Amount of Material Recovered	Material No longer exposed to Stormwater (Yes/No)	

Potential Pollutant Source Identification	Completed by:_____ Title:_____ Date:_____

List all potential stormwater pollutants from materials handled, treated, or stored on-site.

Potential Stormwater Pollutant	Stormwater Pollutant Source	Likelihood of pollutant being present in your stormwater discharge. If yes, explain

Material Inventory	Completed by:_____ Title:_____ Date:_____

List materials handled, treated, stored, or disposed of at the project site that may potentially be exposed to precipitation or runoff.

Material	Purpose/Location	Quantity (Units)				Likelihood of contact with stormwater If Yes, describe reason		Past Spill or Leak	
		Used	Produced	Stored				Yes	No
		(indicate per/wk. or yr.)							

KING COUNTY, WASHINGTON
SURFACE WATER DESIGN MANUAL

REFERENCE 8-F

ADJUSTMENT APPLICATION AND PROCESS GUIDELINES

REFERENCE 8-F

ADJUSTMENT PROCESS GUIDELINES

1.0 PREAPPLICATION ADJUSTMENT PROCESS

This process is used when the applicant needs an adjustment decision to determine if a project is feasible or the results are needed to determine if a project is viable before funding a full application. Preapplication adjustment requests will be accepted when 1) an issue is raised or a potential constraint is identified at a preapplication conference with DPER, and 2) sufficient engineering information to evaluate the request is provided. A higher preapplication adjustment fee will apply to these requests, and any unused adjustment fee will be credited towards the permit application fee.

Steps in the processing of a preapplication adjustment shall include:

- A DPER preapplication conference is scheduled at which the applicant provides justification that a decision on the adjustment will effect viability of the project. An example could include a need to divert flows due to a downstream problem.
- King County may request additional information and site visits due to the limited data and lack of prior project review.
- A preapplication deposit is required and fee for review will be an hourly rate billing applied against the deposit. Any unused fees could be returned to the applicant. Any fees in excess of the deposit must be paid prior to the issuance of a decision.
- For approved preapplication adjustment, the applicant can apply that approval to the applied for permit proposal provided conditions of the approval are met, the proposal has not substantially changed and the applicable regulations have not changed. This will be determined by DPER.

The criteria for granting a preapplication adjustment are the same as for a Standard or Complex adjustment. However, preapplication adjustments will be tied by condition to the project proposal resented at the preapplication meeting. The appeal process is also the same as for a Standard adjustment or a Complex adjustment. This approval will expire 1 year after the approval date, unless a complete permit application is submitted and accepted.

2.0 EXPERIMENTAL DESIGN ADJUSTMENT PROCESS

This process is used for proposing new designs or methods different from those in the manual, that are not site specific, and where data sufficient to establish functional equivalence does not exist. Experimental design proposals will be submitted to DPER for processing review and recommendations and forwarded to DNR for review. These adjustments will incur a special review fee as adopted in the King County DPER fee ordinance. Experimental adjustments should be submitted prior to development permit application since they may take longer than a typical adjustment to review.

Upon approval of the adjustment by the DNR Division Manager, the application can use the design or method in a development proposal without applying for a site-specific adjustment. This type of adjustment is provided to encourage innovation on the part of the development community. It also can expedite the review and development of alternative designs for incorporation in future Manual updates.

Steps in the application for an Experimental Design Adjustment will include:

- The application for adjustment is preferably submitted prior to engineering plan review due to the extended review period that may occur. However, it may occur at any permit stage prior to final plan approval. If the review time is to exceed the time outlined in Section 1.4, staff will provide an

estimate of the additional time necessary to complete the review within 10 working days of submittal of the adjustment.

- Review will follow the Standard or Complex adjustment procedure. DPER may forward to DNR without a recommendation.
- DPER will process and bill the applicant.
- Justification supporting comparable performance of the proposed system to a standard design is required. Where uncertainty or lack of supportive literature or performance testing exists, monitoring may be applicable with joint participation and funding between King County and the applicant.

Only a limited number of experimental adjustments for a particular facility or method will be granted. If the design proves successful, DNR and DPER may establish a blanket adjustment for the design until such time as it can be incorporated in the Design Manual by formal update. The appeal process is also the same as for a Standard adjustment or a Complex adjustment.

3.0 FEE REDUCTION

This process is used for adjustments that are determined to meet either of the conditions A or B identified below. The DPER Director or designee shall be responsible for making the determination for a fee reduction.

A. Minor adjustment requests that are defined as issues requiring no engineering review to determine appropriateness. These include:

- New or revised standard specifications for engineering and construction which are cited in the Manual (e.g., APWA standard specifications for public works construction, WSDOT standard specifications),
- Minor design alternatives that meet the stated intent in the Manual,
- Identified errors in the Manual.

B. Blanket Adjustments (See Reference Section 10-A Blanket Adjustments, for approved Blanket Adjustments).

KING COUNTY, WASHINGTON
SURFACE WATER DESIGN MANUAL

REFERENCE 8-G

DEDICATION AND INDEMNIFICATION CLAUSE – FINAL RECORDING

Sample Dedication and Indemnification Clause - Subdivision

KNOW ALL PEOPLE BY THESE PRESENTS that we, the undersigned owners of interest in the land hereby subdivided, hereby declare this plat to be the graphic representation of the subdivision made hereby, and do hereby dedicate to the use of the public forever all streets and avenues not shown as private hereon and dedicate the use thereof for all public purposes not inconsistent with the use thereof for public highway purposes, and also the right to make all necessary slopes for cuts and fills upon the lots shown thereon in the original reasonable grading of said streets and avenues, and further dedicate to the use of the public all the easements and tracts shown on this plat for all public purposes as indicated thereon, including but not limited to parks, open space, utilities and drainage unless such easements or tracts are specifically identified on this plat as being dedicated or conveyed to a person or entity other than the public, in which case we do hereby dedicate such streets, easements, or tracts to the person or entity identified and for the purpose stated.

Further, the undersigned owners of the land hereby subdivided, waive for themselves, their heirs and assigns and any person or entity deriving title from the undersigned, any and all claims for damages against King County, its successors and assigns which may be occasioned by the establishment, construction, or maintenance of roads and/or drainage systems within this subdivision other than claims resulting from inadequate maintenance by King County.

Further, the undersigned owners of the land hereby subdivided, agree for themselves, their heirs and assigns to indemnify and hold King County, its successors and assigns, harmless from any damage, including any costs of defense, claimed by persons within or without this subdivision to have been caused by alterations of the ground surface, vegetation, drainage, or surface or sub-surface water flows within this subdivision or by establishment, construction or maintenance of the roads within this subdivision. Provided, this waiver and indemnification shall not be construed as releasing King County, its successors or assigns, from liability for damages, including the cost of defense, resulting in whole or in part from the negligence of King County, its successors, or assigns.

This subdivision, dedication, waiver of claims and agreement to hold harmless is made with the free consent and in accordance with the desires of said owners.

IN WITNESS WHEREOF we set our hands and seals.

_____	_____
Name	Name
_____	_____
Name	Name
_____	_____
Name	Name

State of Washington
County of _____

I certify that I know or have satisfactory evidence that

_____

Signed the instrument and acknowledged it to be (his/her) free and voluntary act for the uses and purposes mentioned in the instrument.

Sample Dedication and Indemnification Clause – Short Subdivision

KNOW ALL PEOPLE BY THESE PRESENTS that we, the undersigned owners of interest in the land hereby short subdivided, hereby declare this short plat to be the graphic representation of the short subdivision made hereby, and do hereby dedicate to the use of the public forever all streets and avenues not shown as private hereon and dedicate the use thereof for all public purposes not inconsistent with the use thereof for public highway purposes, and also the right to make all necessary slopes for cuts and fills upon the lots shown thereon in the original reasonable grading of said streets and avenues, and further dedicate to the use of the public all the easements and tracts shown on this plat for all public purposes as indicated thereon, including but not limited to parks, open space, utilities and drainage unless such easements or tracts are specifically identified on this plat as being dedicated or conveyed to a person or entity other than the public, in which case we do hereby dedicate such streets, easements, or tracts to the person or entity identified and for the purpose stated.

Further, the undersigned owners of the land hereby short subdivided, waive for themselves, their heirs and assigns and any person or entity deriving title from the undersigned, any and all claims for damages against King County, its successors and assigns which may be occasioned by the establishment, construction, or maintenance of roads and/or drainage systems within this short subdivision other than claims resulting from inadequate maintenance by King County.

Further, the undersigned owners of the land hereby short subdivided, agree for themselves, their heirs and assigns to indemnify and hold King County, its successors and assigns, harmless from any damage, including any costs of defense, claimed by persons within or without this short subdivision to have been caused by alterations of the ground surface, vegetation, drainage, or surface or sub-surface water flows within this short subdivision or by establishment, construction or maintenance of the roads within this short subdivision. Provided, this waiver and indemnification shall not be construed as releasing King County, its successors or assigns, from liability for damages, including the cost of defense, resulting in whole or in part from the negligence of King County, its successors, or assigns.

This subdivision, dedication, waiver of claims and agreement to hold harmless is made with the free consent and in accordance with the desires of said owners.

IN WITNESS WHEREOF we set our hands and seals.

_____	_____
Name	Name
_____	_____
Name	Name
_____	_____
Name	Name

State of Washington
County of _____

I certify that I know or have satisfactory evidence that

_____

Signed the instrument and acknowledged it to be (his/her) free and voluntary act for the uses and purposes mentioned in the instrument.

KING COUNTY, WASHINGTON
SURFACE WATER DESIGN MANUAL

REFERENCE 8-H

BOND QUANTITIES WORKSHEET

See the current version at:

http://kingcounty.gov/depts/permitting-environmental-review/publications/forms/FormsByTitle.aspx#S .

Select "Site Improvement Bond Quantity Worksheet"

KING COUNTY, WASHINGTON
SURFACE WATER DESIGN MANUAL

REFERENCE 8-J

DECLARATION OF COVENANT

RECORDING REQUESTED BY AND
WHEN RECORDED MAIL TO:

_____

_____

_____

_____

DECLARATION OF COVENANT

FOR INSPECTION AND MAINTENANCE OF STORMWATER FACILITIES AND BMPS

Grantor: _____

Grantee: King County

Legal Description: _____

_____

_____

Additional Legal(s) on: _____

Assessor's Tax Parcel ID#: _____

IN CONSIDERATION of the approved King County _____ permit for application No. _____ relating to the real property ("Property") described above, the Grantor(s), the owner(s) in fee of that Property, hereby covenants(covenant) with King County, a political subdivision of the state of Washington and its municipal successors in interest and assigns ("King County" and "the County", or "its municipal successor"), that he/she(they) will observe, consent to, and abide by the conditions and obligations set forth and described in Paragraphs 1 through 10

below with regard to the Property, and hereby grants(grant) an easement as described in Paragraphs 2 and 3. Grantor(s) hereby grants(grant), covenants(covenant), and agrees(agree) as follows:

1. The Grantor(s) or his/her(their) successors in interest and assigns ("Owners") shall at their own cost, operate, maintain, and keep in good repair, the Property's stormwater facilities and best management practices ("BMPs") identified in the plans and specifications submitted to King County for the review and approval of permit(s) #: _____ . Stormwater facilities include pipes, swales, tanks, vaults, ponds, and other engineered structures designed to manage stormwater on the Property. Stormwater BMPs include dispersion and infiltration devices, native vegetated areas, permeable pavements, vegetated roofs, rainwater harvesting systems, reduced impervious surface coverage, and other measures designed to reduce the amount of stormwater runoff on the Property.

2. King County shall have the right to ingress and egress over those portions of the Property necessary to perform inspections of the stormwater facilities and BMPs and conduct other activities specified in this Declaration of Covenant and in accordance with King County Code ("KCC") 9.04.120 or relevant municipal successor's codes as applicable. This right of ingress and egress, right to inspect, and right to perform required maintenance or repair as provided for in Section 3 below, shall not extend over those portions of the Property shown in Exhibit "A."

3. If King County determines that maintenance or repair work is required to be done to any of the stormwater facilities or BMPs, the Director of the Water and Land Resources Division or its municipal successor in interest ("WLR") shall give notice of the specific maintenance and/or repair work required pursuant to KCC 9.04.120 or relevant municipal successor's codes as applicable. The Director shall also set a reasonable time in which such work is to be completed by the Owners. If the above required maintenance or repair is not completed within the time set by the Director, the County may perform the required maintenance or repair, and hereby is given access to the Property, subject to the exclusion in Paragraph 2 above, for such purposes. Written notice will be sent to the Owners stating the County's intention to perform such work. This work will not commence until at least seven (7) days after such

notice is mailed. If, within the sole discretion of the WLR Director, there exists an imminent or present danger, the seven (7) day notice period will be waived and maintenance and/or repair work will begin immediately.

4. If at any time King County reasonably determines that a stormwater facility or BMP on the Property creates any of the hazardous conditions listed in KCC 9.04.130 or relevant municipal successor's codes as applicable and herein incorporated by reference, the WLR Director or equivalent municipal successors official may take measures specified therein.

5. The Owners shall assume all responsibility for the cost of any maintenance or repair work completed by the County as described in Paragraph 3 or any measures taken by the County to address hazardous conditions as described in Paragraph 4. Such responsibility shall include reimbursement to the County within thirty (30) days of the receipt of the invoice for any such work performed. Overdue payments will require payment of interest at the current legal rate as liquidated damages. If legal action ensues, the prevailing party is entitled to costs or fees.

6. The Owners are hereby required to obtain written approval from the King County WLR Director prior to filling, piping, cutting, or removing vegetation (except in routine landscape maintenance) in open vegetated stormwater facilities (such as swales, channels, ditches, ponds, etc.), or performing any alterations or modifications to the stormwater facilities and BMPs referenced in this Declaration of Covenant.

7. Any notice or consent required to be given or otherwise provided for by the provisions of this Agreement shall be effective upon personal delivery, or three (3) days after mailing by Certified Mail, return receipt requested.

8. With regard to the matters addressed herein, this agreement constitutes the entire agreement between the parties, and supersedes all prior discussions, negotiations, and all agreements whatsoever whether oral or written.

9. This Declaration of Covenant is intended to protect the value and desirability of the real property described above, and shall inure to the benefit of all the citizens of King County and its

municipal successors and assigns. This Declaration of Covenant shall run with the land and be binding upon Grantor(s), and Grantor's(s') successors in interest, and assigns.

10. This Declaration of Covenant may be terminated by execution of a written agreement by the Owners and King County or the municipal successor that is recorded by King County in its real property records.

IN WITNESS WHEREOF, this Declaration of Covenant for the Inspection and Maintenance of Stormwater Facilities and BMPs is executed this _____ day of _____, 20_____.

_____
GRANTOR, owner of the Property

_____
GRANTOR, owner of the Property

STATE OF WASHINGTON)
COUNTY OF KING)ss.

On this day personally appeared before me:

_____, to me known to be the individual(s) described in and who executed the within and foregoing instrument and acknowledged that they signed the same as their free and voluntary act and deed, for the uses and purposes therein stated.

Given under my hand and official seal this _____ day of _____, 20_____.

_____

_____
Printed name
Notary Public in and for the State of Washington, residing at

_____

My appointment expires _____

KING COUNTY, WASHINGTON
SURFACE WATER DESIGN MANUAL

REFERENCE 8-K

DRAINAGE RELEASE COVENANT

RECORDING REQUESTED BY AND
WHEN RECORDED MAIL TO:

_____

_____

_____

_____

DECLARATION OF COVENANT

FOR DRAINAGE RELEASE

Grantor: _____

Grantee: King County

Legal Description: _____

_____

_____

Additional Legal(s) on: _____

Assessor's Tax Parcel ID#: _____

THIS DECLARATION OF COVENANT FOR DRAINAGE RELEASE is made by and between Grantor and Grantee.

WHEREAS, the Grantor(s) represents(represent) and warrants(warrant) that he/she(they) is(are) the owner(s) in fee of that certain parcel of land, described above, and

WHEREAS, King County, a political subdivision of the State of Washington, is implementing an approved drainage plan for the project known as _____, permit no. _____, on lands located at the above description, which said plan shall divert surface and storm waters from their natural course and cause them to flow (onto)/(away from) the lands of Grantor(s);

NOW THEREFORE, in consideration of either Grantee approval of diversion by said plan and/or other valuable consideration, receipt of which is hereby acknowledged, the Grantor hereby willfully acknowledges, agrees, and consents to the diversion of surface and storm waters (onto)/(away from) its lands and to hold and release Grantee harmless for any damage that may be caused by such diversion of flow. This release shall be a covenant running with the land and shall be binding upon the Grantee, its heirs, successors, and assigns forever.

IN WITNESS WHEREOF, this Declaration of Covenant for Drainage Release is executed this _____ day of _____, 20_____.

_____
GRANTOR, owner of the Property

_____
GRANTOR, owner of the Property

STATE OF WASHINGTON)
COUNTY OF KING)ss.

On this day personally appeared before me:

_____, to me known to be the individual(s) described in and who executed the within and foregoing instrument and acknowledged that they signed the same as their free and voluntary act and deed, for the uses and purposes therein stated.

Given under my hand and official seal this _____ day of _____, 20_____.

_____

_____
Printed name
Notary Public in and for the State of Washington, residing at

_____

My appointment expires _____

KING COUNTY, WASHINGTON
SURFACE WATER DESIGN MANUAL

REFERENCE 8-L

DRAINAGE EASEMENT

RECORDING REQUESTED BY AND
WHEN RECORDED MAIL TO:

_____

_____

_____

_____

DRAINAGE EASEMENT

Grantor: _____

Grantee: King County

Legal Description: _____

_____

_____

Additional Legal(s) on: _____

Assessor's Tax Parcel ID#: _____

FOR A VALUABLE CONSIDERATION, receipt of which is hereby acknowledged, the Grantor(s), the owner(s) in fee of that certain parcel of land, described above, hereby grant and convey a(an) [exclusive/non-exclusive] easement (attached and incorporated as Exhibit "A") to Grantee, King County, a political subdivision of the state of Washington and its municipal successors in interest and assigns ("King County" and "the County", or "its municipal successor"), for the purpose of conveying, storing, managing, and facilitating surface and storm water per an engineering plan approved by King County for the project known as: _____

_____,

together with the right for King County to enter said drainage easement at reasonable times for the purpose of inspecting, operating, maintaining, repairing, and improving the drainage facilities contained herein. Note that except for facilities which have been formally accepted for maintenance by King County, maintenance and repair of drainage facilities on private property is the responsibility of the property owner.

The Grantor(s) of said parcel is (are) required to obtain prior written approval from the Water and Land Resources Division of the King County Department of Natural Resources prior to filling, piping, cutting, or removing vegetation (except for routine landscape maintenance such as lawn mowing) in open vegetated drainage facilities (such as swales, channels, ditches, ponds, etc.), or performing any alterations or modifications to the drainage facilities, contained within said drainage easement.

This easement is intended to facilitate reasonable access to the drainage facilities. It is binding upon the Grantor(s), its heirs, successors, and assigns.

IN WITNESS WHEREOF, this Drainage Easement is executed this _____ day of

_____, 20_____.

_____
GRANTOR, owner of the Property

_____
GRANTOR, owner of the Property

STATE OF WASHINGTON)
COUNTY OF KING)ss.

On this day personally appeared before me:

_____, to me known to be the individual(s) described in and who executed the within and foregoing instrument and acknowledged that they signed the same as their free and voluntary act and deed, for the uses and purposes therein stated.

Given under my hand and official seal this _____ day of _____, 20_____.

_____

_____
Printed name
Notary Public in and for the State of Washington, residing at

_____

My appointment expires _____

KING COUNTY, WASHINGTON
SURFACE WATER DESIGN MANUAL

REFERENCE 8-M

FLOW CONTROL BMP DECLARATION OF COVENANT AND GRANT OF EASEMENT

BMP MAINTENANCE INSTRUCTIONS (RECORDABLE FORMAT)

RECORDING REQUESTED BY AND
WHEN RECORDED MAIL TO:

_____

_____

_____

_____

DECLARATION OF COVENANT

FOR MAINTENANCE AND INSPECTION OF FLOW CONTROL BMPS

Grantor: _____

Grantee: King County

Legal Description: _____

_____

_____

Additional Legal(s) on: _____

Assessor's Tax Parcel ID#: _____

IN CONSIDERATION of the approved King County (check one of the following) ❑ residential building permit, ❑ commercial building permit, ❑ clearing and grading permit, ❑ subdivision permit, or ❑ short subdivision permit for Application No. _____ relating to the real property ("Property") described above, the Grantor(s), the owner(s) in fee of that Property, hereby covenants(covenant) with King County, a political subdivision of the state of Washington, and its municipal successors in interest and assigns ("King County" and "the County", or "its municipal successor"), that he/she(they) will observe, consent to, and abide by the conditions and obligations set forth and described in Paragraphs 1 through 8 below with regard to the Property. Grantor(s) hereby grants(grant), covenants(covenant), and agrees(agree) as follows:

1. Grantor(s) or his/her(their) successors in interest and assigns ("Owners") shall retain, uphold, and protect the stormwater management devices, features, pathways, limits, and restrictions, known as flow control best management practices ("BMPs"), shown on the approved Flow Control BMP Site Plan for the Property attached hereto and incorporated herein as Exhibit A.

2. The Owners shall at their own cost, operate, maintain, and keep in good repair, the Property's BMPs as described in the approved Design and Maintenance Details for each BMP attached hereto and incorporated herein as Exhibit B.

3. King County shall provide at least 30 days written notice to the Owners that entry on the Property is planned for the inspection of the BMPs. After the 30 days, the Owners shall allow King County to enter for the sole purpose of inspecting the BMPs. In lieu of inspection by the County, the Owners may elect to engage a licensed civil engineer registered in the state of Washington who has expertise in drainage to inspect the BMPs and provide a written report describing their condition. If the engineer option is chosen, the Owners shall provide written notice to the Director of the Water and Land Resources Division or its municipal successor in interest ("WLR") within fifteen days of receiving the County's notice of inspection. Within 30 days of giving this notice, the Owners, or the engineer on behalf of the Owners, shall provide the engineer's report to WLR. If the report is not provided in a timely manner as specified above, the County may inspect the BMPs without further notice.

4. If King County determines from its inspection, or from an engineer's report provided in accordance with Paragraph 3, that maintenance, repair, restoration, and/or mitigation work is required for the BMPs, WLR shall notify the Owners of the specific maintenance, repair, restoration, and/or mitigation work (Work) required under Title 9 of the King County Code ("KCC"). WLR shall also set a reasonable deadline for completing the Work or providing an engineer's report that verifies completion of the Work. After the deadline has passed, the Owners shall allow the County access to re-inspect the BMPs unless an engineer's report has been provided verifying completion of the Work. If the work is not completed properly within the time frame set by WLR, King County may initiate an enforcement action. Failure to

properly maintain the BMPs is a violation of KCC Chapter 9.04 and may subject the Owners to enforcement under the KCC, including fines and penalties.

5. Apart from performing routine landscape maintenance, the Owners are hereby required to obtain written approval from WLR before performing any alterations or modifications to the BMPs.

6. Any notice or approval required to be given by one party to the other under the provisions of this Declaration of Covenant shall be effective upon personal delivery to the other party, or after three (3) days from the date that the notice or approval is mailed with delivery confirmation to the current address on record with each Party. The parties shall notify each other of any change to their addresses.

7. This Declaration of Covenant is intended to promote the efficient and effective management of surface water drainage on the Property, and it shall inure to the benefit of all the citizens of King County and its municipal successors and assigns. This Declaration of Covenant shall run with the land and be binding upon Grantor(s), and Grantor's(s') successors in interest and assigns.

8. This Declaration of Covenant may be terminated by execution of a written agreement by the Owners and King County that is recorded by King County in its real property records.

IN WITNESS WHEREOF, this Declaration of Covenant for the Maintenance and Inspection of Flow Control BMPs is executed this _____ day of _____, 20_____.

_____
GRANTOR, owner of the Property

_____
GRANTOR, owner of the Property

STATE OF WASHINGTON)
COUNTY OF KING)ss.

On this day personally appeared before me:

_____, to me known to be the individual(s) described in and who executed the within and foregoing instrument and acknowledged that they signed the same as their free and voluntary act and deed, for the uses and purposes therein stated.

Given under my hand and official seal this _____ day of _____, 20_____.

_____

_____
Printed name
Notary Public in and for the State of Washington, residing at

_____

My appointment expires _____

MAINTENANCE INSTRUCTIONS FOR FULL DISPERSION

Your property contains a stormwater management flow control BMP (best management practice) called ***"full dispersion."***

Full dispersion is a strategy for minimizing the area disturbed by development (i.e., impervious or non-native pervious surfaces, such as concrete areas, roofs, and lawns) relative to native vegetated areas (e.g., forested surface) together with the application of dispersion techniques that utilize the natural capacity of the native vegetated areas to mitigate the stormwater runoff quantity and quality impacts of the developed surfaces.

This flow control BMP has two primary components that must be maintained:

(1) the devices that disperse runoff from the developed surfaces, and

(2) the native vegetated area and flowpath receiving the dispersed runoff.

Dispersion Devices

The **dispersion devices** used on your property include the following as indicated on the flow control BMP site plan (CHECK THE BOX(ES) THAT APPLY):

❑ splash blocks, ❑ rock pads, ❑ gravel filled trenches, ❑ sheet flow.

MAINTENANCE RESTRICTIONS

The size, placement, composition, and downstream flowpaths of these devices as depicted by the flow control BMP site plan and design details must be maintained and may not be changed without written approval either from the King County Water and Land Resources Division or through a future development permit from King County.

INSPECTION FREQUENCY AND MAINTENANCE GUIDELINES

- Dispersion devices must be inspected annually and after major storm events to identify and repair any physical defects.
- When native soil is exposed or erosion channels are present, the sources of the erosion or concentrated flow need to be identified and mitigated.
- Bare spots should be re-vegetated with native vegetation.
- Concentrated flow can be mitigated by leveling the edge of the pervious area and/or regrading or replenishing the rock in the dispersion device, such as in rock pads and gravel-filled trenches.

RECORDING REQUIREMENT

These full dispersion flow control BMP maintenance and operation instructions must be recorded as an attachment to the required **declaration of covenant and grant of easement** per Requirement 3 of Section C.1.3.4 of the King County *Surface Water Design Manual*. The intent of these instructions is to explain to future property owners, the purpose of the BMP and how it must be maintained and operated. These instructions are intended to be a minimum; the King County Department of Permitting and Environmental Services (DPER) may require additional instructions based on site-specific conditions. See King County's Surface Water Design Manual website for additional information and updates.

TYPICAL FULL DISPERSION APPLICATIONS

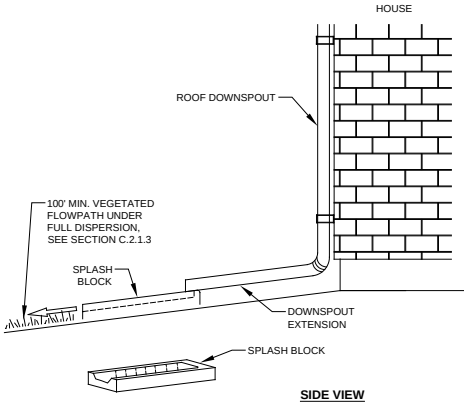

SIDE VIEW
NTS

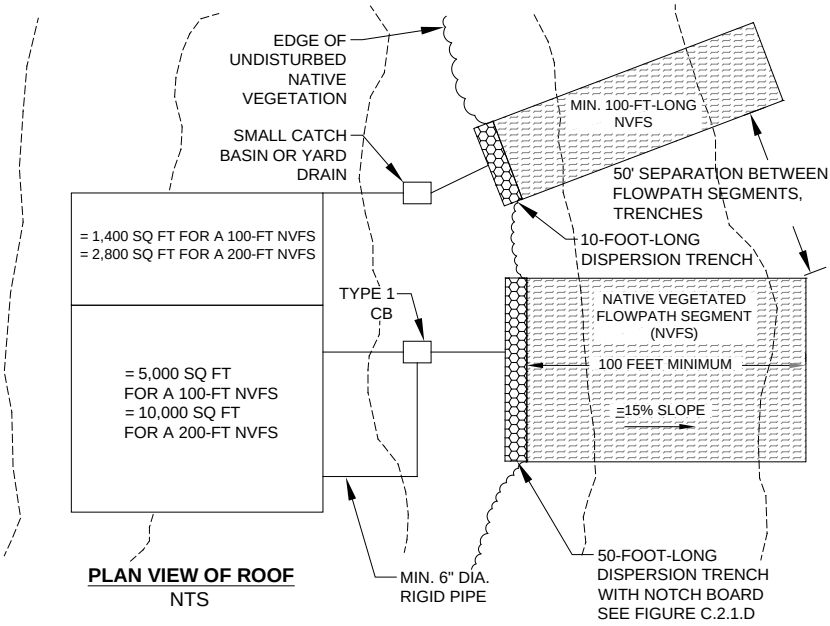

PLAN VIEW OF ROOF
NTS

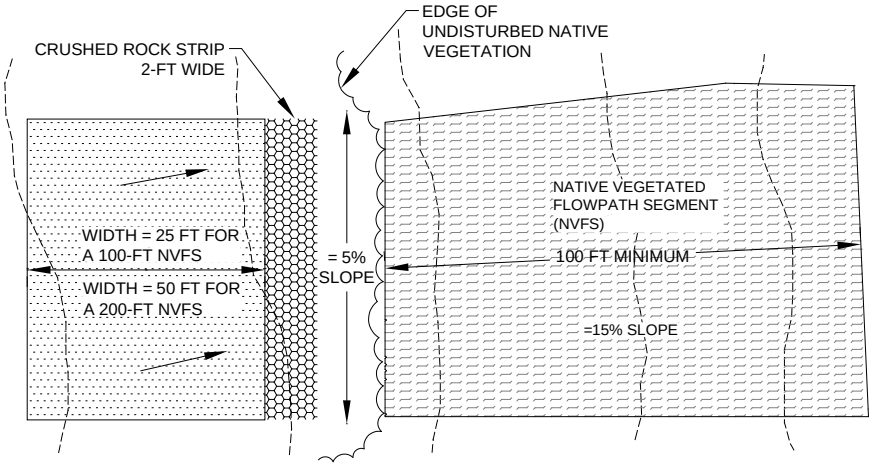

PLAN VIEW
NTS

MAINTENANCE INSTRUCTIONS FOR FULL INFILTRATION

Your property contains a stormwater management flow control BMP (best management practice) called ***"full infiltration,"*** which was installed to mitigate the stormwater quantity and quality impacts of some or all of the impervious surfaces on your property.

Full infiltration is a method of soaking runoff from impervious area (such as paved areas and roofs) into the ground. If properly installed and maintained, full infiltration can manage runoff so that a majority of precipitation events are absorbed. Infiltration devices, such as gravel filled trenches, drywells, and ground surface depressions, facilitate this process by putting runoff in direct contact with the soil and holding the runoff long enough to soak most of it into the ground. To be successful, the soil condition around the infiltration device must be reliably able to soak water into the ground for a reasonable number of years.

Infiltration Devices

The **infiltration devices** used on your property include the following as indicated on the flow control BMP site plan (CHECK THE BOX(ES) THAT APPLY):

❑ gravel filled trenches, ❑ drywells, ❑ ground surface depressions.

MAINTENANCE RESTRICTIONS

The size, placement, and composition of these devices as depicted by the flow control BMP site plan and design details must be maintained and may not be changed without written approval either from the King County Water and Land Resources Division or through a future development permit from King County.

INSPECTION FREQUENCY AND MAINTENANCE GUIDELINES

To be successful, the soil condition around the infiltration device must be reliably able to soak water into the ground for a reasonable number of years.

- Infiltration devices must be inspected annually and after major storm events to identify and repair any physical defects.
- Maintenance and operation of the system should focus on ensuring the system's viability by preventing sediment-laden flows from entering the device. Excessive sedimentation will result in a plugged or non-functioning facility.
- If the infiltration device has a catch basin, sediment accumulation must be removed on a yearly basis or more frequently if necessary.
- Prolonged ponding around or atop a device may indicate a plugged facility. If the device becomes plugged, it must be replaced.
- Keeping the areas that drain to infiltration devices well swept and clean will enhance the longevity of these devices.
- For roofs, frequent cleaning of gutters will reduce sediment loads to these devices.

RECORDING REQUIREMENT

These full infiltration flow control BMP maintenance and operation instructions must be recorded as an attachment to the required **declaration of covenant and grant of easement** per Requirement 3 of Section C.1.3.4 of the King County *Surface Water Design Manual*. The intent of these instructions is to explain to future property owners, the purpose of the BMP and how it must be maintained and operated. These instructions are intended to be a minimum; the King County Department of Permitting and Environmental Services (DPER) may require additional instructions based on site-specific conditions. See King County's Surface Water Design Manual website for additional information and updates.

TYPICAL FULL INFILTRATION APPLICATIONS

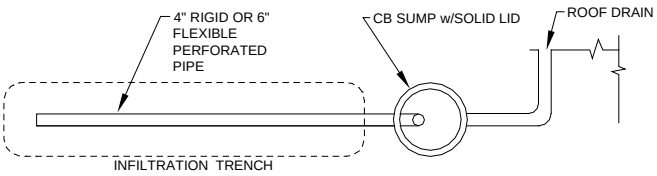

PLAN VIEW
NTS

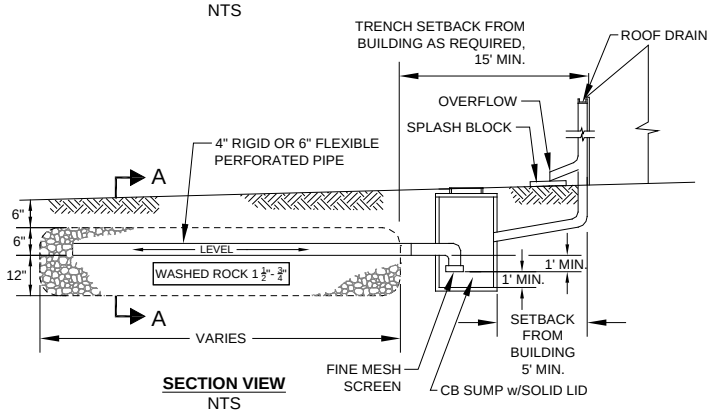

SECTION VIEW
NTS

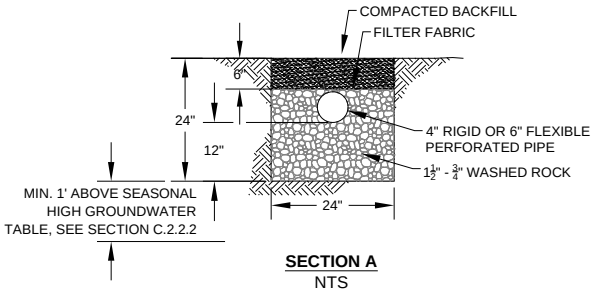

SECTION A
NTS

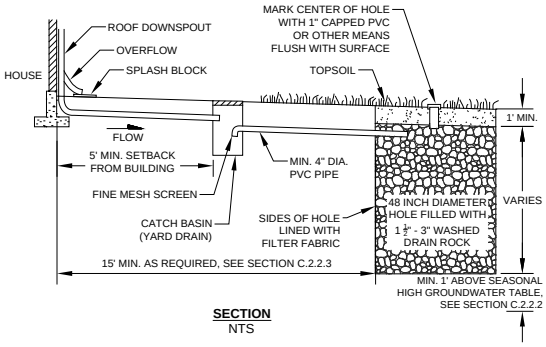

SECTION
NTS

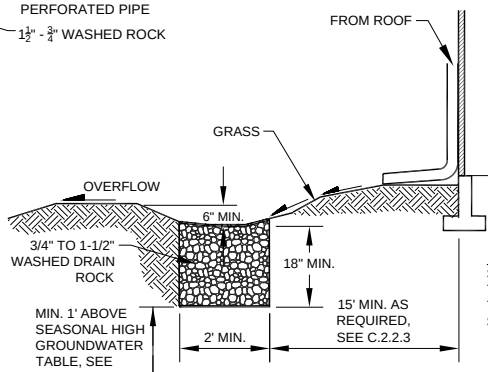

X-SECTION
NTS

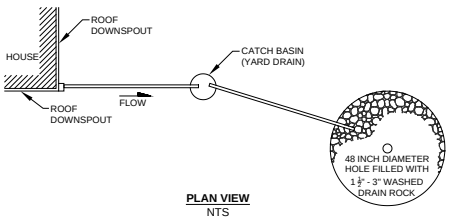

PLAN VIEW
NTS

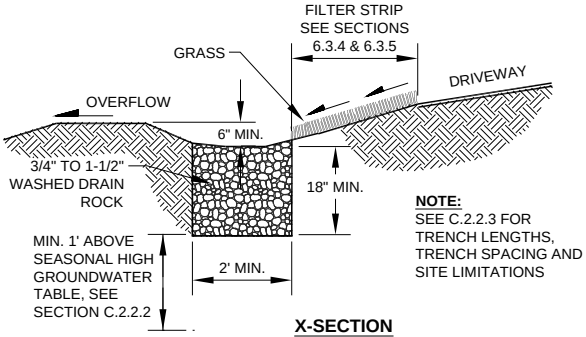

NOTE:
SEE C.2.2.3 FOR TRENCH LENGTHS, TRENCH SPACING AND SITE LIMITATIONS

X-SECTION
NTS

MAINTENANCE INSTRUCTIONS FOR A RAIN GARDEN

Your property contains a stormwater management flow control BMP (best management practice) called a ***"rain garden,"*** which was installed to mitigate the stormwater quantity and quality impacts of some or all of the impervious or non-native pervious surfaces on your property.

Rain gardens, often described as "bioretention," are vegetated closed depressions or ponds that retain and filter stormwater from an area of impervious surface or non-native pervious surface. The soil in the rain garden has been enhanced to encourage and support vigorous plant growth that serves to filter the water and sustain infiltration capacity. Depending on soil conditions, rain gardens may have water in them throughout the wet season and may overflow during major storm events.

MAINTENANCE RESTRICTIONS

The size, placement, and design of the rain garden as depicted by the flow control BMP site plan and design details must be maintained and may not be changed without written approval either from the King County Water and Land Resources Division or through a future development permit from King County. Plant materials may be changed to suit tastes, but chemical fertilizers and pesticides must not be used.

INSPECTION FREQUENCY AND MAINTENANCE GUIDELINES

- Rain gardens must be inspected annually for physical defects and sediment accumulation.
- After major storm events, the system should be checked to see that the overflow system is working properly and sedimentation is not occurring at the inlet. If erosion channels or bare spots are evident, they should be stabilized with soil, plant material, mulch, or landscape rock. Sediment deposits should be carefully removed and the sediment source eliminated.
- A supplemental watering program may be needed the first year to ensure the long-term survival of the rain garden's vegetation.
- Chemical fertilizers and pesticides must not be used.
- Mulch may be added and additional compost should be worked into the soil over time.
- Plant materials may be changed to suit tastes.
- Vegetation should be maintained as follows:

  1) replace all dead vegetation as soon as possible;

  2) remove fallen leaves and debris as needed;

  3) remove all noxious vegetation when discovered;

  4) manually weed without herbicides or pesticides;

  5) to protect infiltration performance, do not compact soils in the bioretention cell with heavy maintenance equipment and/or excessive foot traffic;

  6) during drought conditions, use mulch to prevent excess solar damage and water loss.

RECORDING REQUIREMENT

These rain garden flow control BMP maintenance and operation instructions must be recorded as an attachment to the required **declaration of covenant and grant of easement** per Requirement 3 of Section C.1.3.4 of the King County *Surface Water Design Manual*. The intent of these instructions is to explain to future property owners, the purpose of the BMP and how it must be maintained and operated. These instructions are intended to be a minimum; the King County Department of Permitting and Environmental Services (DPER) may require additional instructions based on site-specific conditions. See King County's Surface Water Design Manual website for additional information and updates.

TYPICAL RAIN GARDEN (SPILLWAY OR CATCHBASIN OUTLET)

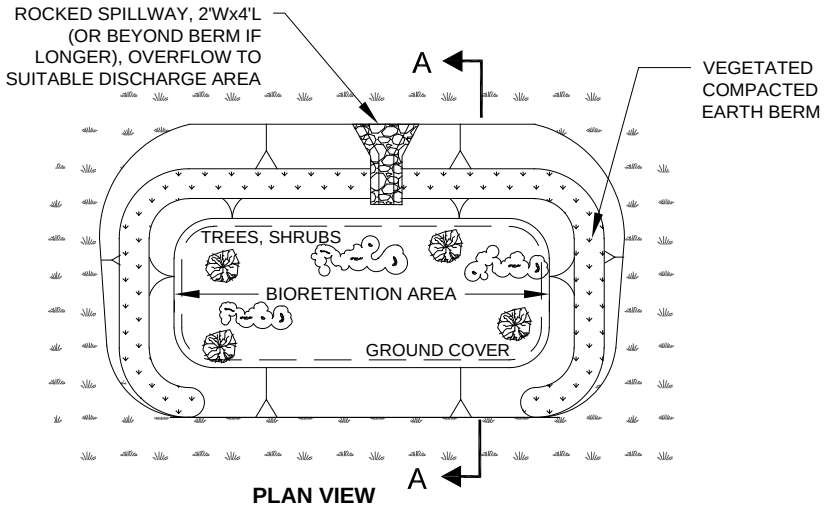

PLAN VIEW
NTS

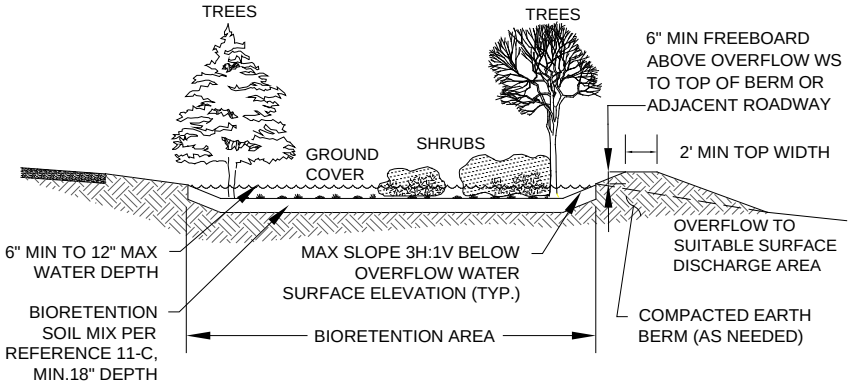

SECTION A-A
NTS

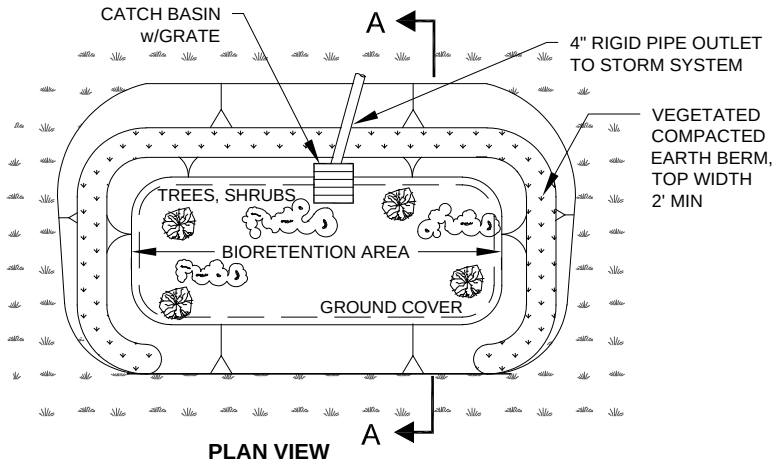

PLAN VIEW
NTS

MAINTENANCE INSTRUCTIONS FOR A BIORETENTION CELL

Your property contains a stormwater management flow control BMP (best management practice) called ***"bioretention,"*** which was installed to mitigate the stormwater quantity and quality impacts of some or all of the impervious or non-native pervious surfaces on your property.

Bioretention cells, like rain gardens, are vegetated closed depressions or ponds that retain and filter stormwater from an area of impervious surface or non-native pervious surface. Bioretention cells rely on effective infiltration performance moreso than rain gardens. The soil in the bioretention cell has been enhanced to encourage and support vigorous plant growth that serves to filter the water and sustain a minimum infiltration capacity. Depending on soil conditions, bioretention cells may have water in them throughout the wet season and may overflow during major storm events. However, standing water can also be an indicator that periodic maintenance is required to sustain infiltrative performance.

MAINTENANCE RESTRICTIONS

The size, placement, and design of the rain garden as depicted by the flow control BMP site plan and design details must be maintained and may not be changed without written approval either from the King County Water and Land Resources Division or through a future development permit from King County. Plant materials may be changed to suit tastes, but chemical fertilizers and pesticides must not be used.

INSPECTION FREQUENCY AND MAINTENANCE GUIDELINES

- Bioretention cells must be inspected annually for physical defects and sediment accumulation.
- After major storm events, the system should be checked to see that the overflow system is working properly and sedimentation is not occurring at the inlet. If erosion channels or bare spots are evident, they should be stabilized with soil, plant material, mulch, or landscape rock. Sediment deposits should be carefully removed and the sediment source eliminated.
- A supplemental watering program may be needed the first year to ensure the long-term survival of the bioretention cells' vegetation.
- Chemical fertilizers and pesticides must not be used.
- Mulch may be added and additional compost should be worked into the soil over time.
- Plant materials may be changed to suit tastes.
- Vegetation should be maintained as follows:

  1) replace all dead vegetation as soon as possible;

  2) remove fallen leaves and debris as needed;

  3) remove all noxious vegetation when discovered;

  4) manually weed without herbicides or pesticides;

  5) to protect infiltration performance, do not compact soils in the bioretention cell with heavy maintenance equipment and/or excessive foot traffic;

  6) during drought conditions, use mulch to prevent excess solar damage and water loss.

RECORDING REQUIREMENT

These bioretention flow control BMP maintenance and operation instructions must be recorded as an attachment to the required **declaration of covenant and grant of easement** per Requirement 3 of Section C.1.3.4 of the King County *Surface Water Design Manual*. The intent of these instructions is to explain to future property owners, the purpose of the BMP and how it must be maintained and operated. These instructions are intended to be a minimum; the King County Department of Permitting and Environmental Services (DPER) may require additional instructions based on site-specific conditions. See King County's Surface Water Design Manual website for additional information and updates.

TYPICAL BIORETENTION CELL (SPILLWAY OR CATCHBASIN OUTLET)

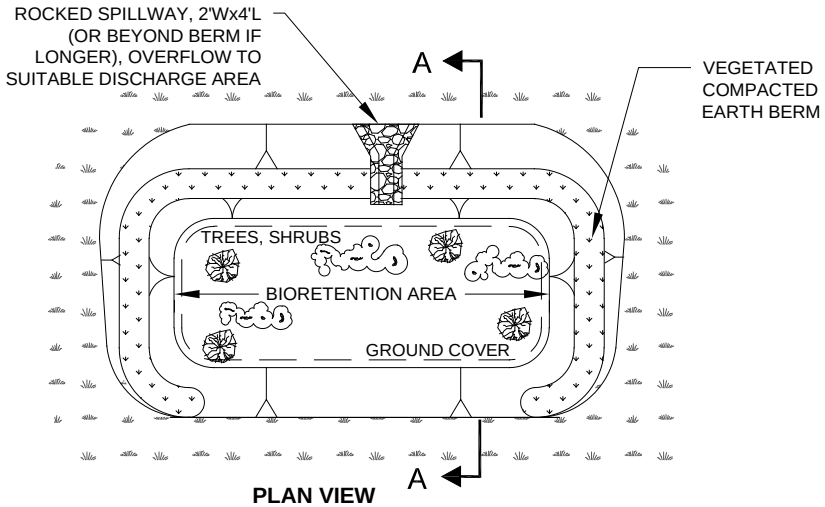

PLAN VIEW
NTS

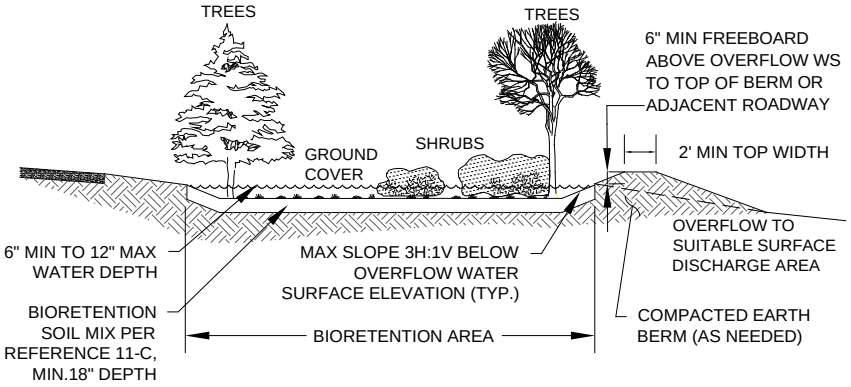

SECTION A-A
NTS

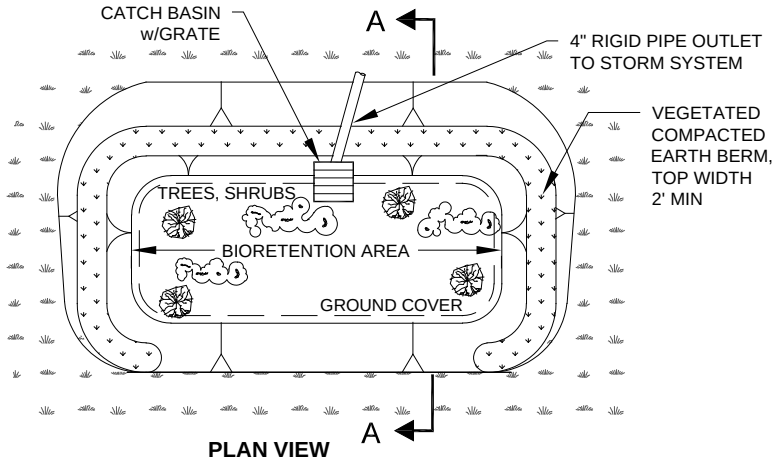

PLAN VIEW
NTS

MAINTENANCE INSTRUCTIONS FOR VEGETATED PERMEABLE PAVEMENT (GRASSED MODULAR GRID PAVEMENT)

Your property contains a stormwater management flow control BMP (best management practice) called ***"grassed modular grid pavement,"*** which was installed to minimize the stormwater quantity and quality impacts of some or all of the paved surfaces on your property.

Grassed modular grid pavement has the runoff characteristics of a lawn while providing the weight-bearing capacity of concrete pavement. The grassed surface not only minimizes runoff quantity, it helps to filter pollutants generating by vehicular use of the surface.

MAINTENANCE RESTRICTIONS

The composition and area of grassed modular grid pavement as depicted by the flow control BMP site plan and design details must be maintained and may not be changed without written approval either from the King County Water and Land Resources Division or through a future development permit from King County.

INSPECTION FREQUENCY AND MAINTENANCE GUIDELINES

- Grassed modular grid pavement must be inspected after one major storm each year to make sure it is working properly. More frequent inspection is recommended.
- Prolonged ponding or standing water on the pavement surface is a sign that the system is defective and may need to be replaced. If this occurs, or if any modification, surface restoration or stabilization is planned (except for mowing and periodic maintenance), contact the pavement installer or the King County Water and Land Resources Division for further instructions.
- The grassed surface of the pavement must be regularly mowed and maintained in a good condition. Bare spots must be replanted in the spring or fall.

RECORDING REQUIREMENT

These vegetated permeable pavement flow control BMP maintenance and operation instructions must be recorded as an attachment to the required **declaration of covenant and grant of easement** per Requirement 3 of Section C.1.3.4 of the King County *Surface Water Design Manual*. The intent of these instructions is to explain to future property owners, the purpose of the BMP and how it must be maintained and operated. These instructions are intended to be a minimum; the King County Department of Permitting and Environmental Services (DPER) may require additional instructions based on site-specific conditions. See King County's Surface Water Design Manual website for additional information and updates.

MAINTENANCE INSTRUCTIONS FOR PERMEABLE PAVEMENT (NON-VEGETATED)

Your property contains a stormwater management flow control BMP (best management practice) called ***"permeable pavement,"*** which was installed to minimize the stormwater quantity and quality impacts of some or all of the paved surfaces on your property.

Permeable pavements reduce the amount of rainfall that becomes runoff by allowing water to seep through the pavement into a free-draining gravel or sand bed, where it can be infiltrated into the ground.

Permeable Pavements

The type(s) of **permeable pavement** used on your property is (CHECK THE BOX(ES) THAT APPLY):

- ❑ porous concrete
- ❑ porous asphaltic concrete
- ❑ permeable pavers
- ❑ modular grid pavement.

MAINTENANCE RESTRICTIONS

The area covered by permeable pavement as depicted by the flow control BMP site plan and design details must be maintained as permeable pavement and may not be changed without written approval either from the King County Water and Land Resources Division or through a future development permit from King County.

INSPECTION FREQUENCY AND MAINTENANCE GUIDELINES

- Permeable pavements must be inspected after one major storm each year to make sure it is working properly. More frequent inspection is recommended.
- Prolonged ponding or standing water on the pavement surface is a sign that the system is defective and may need to be replaced. If this occurs, contact the pavement installer or the King County Water and Land Resources Division for further instructions.
- A typical permeable pavement system has a life expectancy of approximately 25-years. To help extend the useful life of the system, the surface of the permeable pavement should be kept clean, stable and free of leaves, debris, and sediment through regular sweeping or vacuum sweeping. Aggregate fill in modular grid pavement may need periodic surface replenishment.
- The owner is responsible for the repair of all ruts, deformation, and/or broken paving units.

RECORDING REQUIREMENT

These permeable pavement flow control BMP maintenance and operation instructions must be recorded as an attachment to the required **declaration of covenant and grant of easement** per Requirement 3 of Section C.1.3.4 of the King County *Surface Water Design Manual*. The intent of these instructions is to explain to future property owners, the purpose of the BMP and how it must be maintained and operated. These instructions are intended to be a minimum; the King County Department of Permitting and Environmental Services (DPER) may require additional instructions based on site-specific conditions. See King County's Surface Water Design Manual website for additional information and updates.

MAINTENANCE INSTRUCTIONS FOR BASIC DISPERSION

Your property contains a stormwater management flow control BMP (best management practice) called ***"basic dispersion,"*** which was installed to mitigate the stormwater quantity and quality impacts of some or all of the impervious surfaces or non-native pervious surfaces on your property.

Basic dispersion is a strategy for utilizing any available capacity of onsite vegetated areas to retain, absorb, and filter the runoff from developed surfaces. This flow control BMP has two primary components that must be maintained:

(1) the devices that disperse runoff from the developed surfaces and

(2) the vegetated area over which runoff is dispersed.

Dispersion Devices

The **dispersion devices** used on your property include the following as indicated on the flow control BMP site plan (CHECK THE BOX(ES) THAT APPLY):

❑ splash blocks, ❑ rock pads, ❑ gravel filled trenches, ❑ sheet flow.

MAINTENANCE RESTRICTIONS

The size, placement, composition, and downstream flowpaths of these devices as depicted by the flow control BMP site plan and design details must be maintained and may not be changed without written approval either from the King County Water and Land Resources Division or through a future development permit from King County.

INSPECTION FREQUENCY AND MAINTENANCE GUIDELINES

This flow control BMP has two primary components that must be maintained:

(1) the devices that disperse runoff from the developed surfaces and

(2) the vegetated flowpath area over which runoff is dispersed.

Maintenance of Dispersion Devices

- Dispersion devices must be inspected annually and after major storm events to identify and repair any physical defects.
- When native soil is exposed or erosion channels are present, the sources of the erosion or concentrated flow need to be identified and mitigated.
- Concentrated flow can be mitigated by leveling the edge of the pervious area and/or realigning or replenishing the rocks in the dispersion device, such as in rock pads and gravel filled trenches.

Maintenance of Vegetated Flowpaths

- The vegetated area over which runoff is dispersed must be maintained in good condition free of bare spots and obstructions that would concentrate flows.

RECORDING REQUIREMENT

These basic dispersion flow control BMP maintenance and operation instructions must be recorded as an attachment to the required **declaration of covenant and grant of easement** per Requirement 3 of Section C.1.3.4 of the King County *Surface Water Design Manual*. The intent of these instructions is to explain to future property owners, the purpose of the BMP and how it must be maintained and operated. These instructions are intended to be a minimum; the King County Department of Permitting and Environmental Services (DPER) may require additional instructions based on site-specific conditions. See King County's Surface Water Design Manual website for additional information and updates.

TYPICAL SPLASH BLOCK	TYPICAL 10-FOOT DISPERSION TRENCH CROSS-SECTION

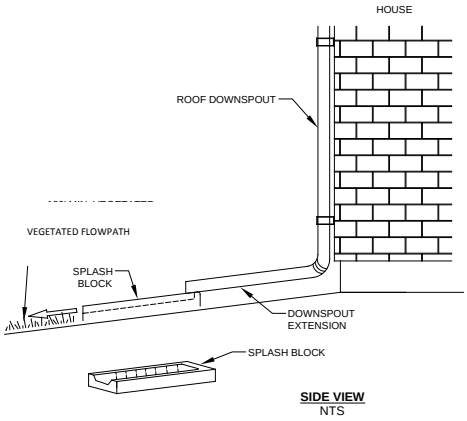

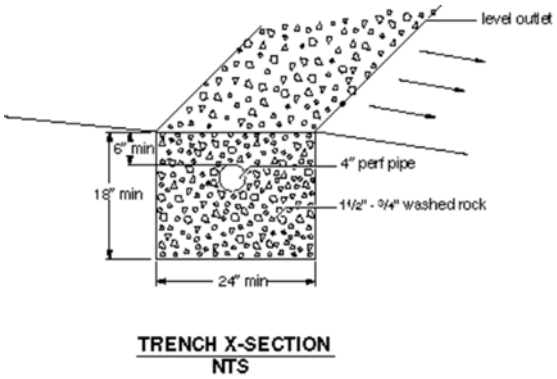

TYPICAL DRIVEWAY APPLICATION OF DISPERSION TRENCH AND ROCK PAD

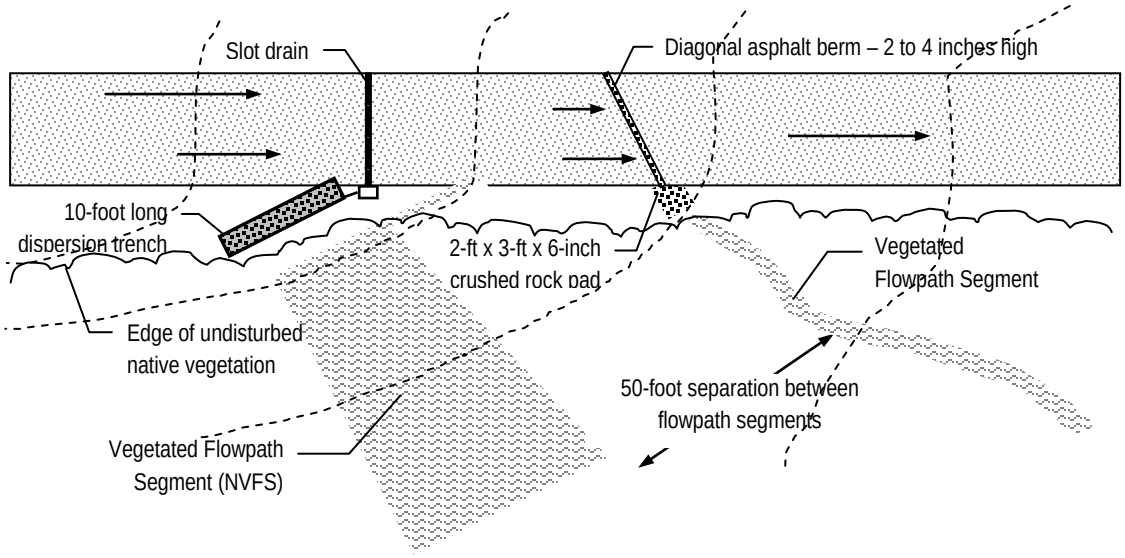

PLAN VIEW OF DRIVEWAY

KING COUNTY, WASHINGTON
SURFACE WATER DESIGN MANUAL

REFERENCE 8-N

IMPERVIOUS SURFACE LIMIT COVENANT

MAINTENANCE INSTRUCTIONS FOR LIMITED INFILTRATION

Your property contains a stormwater management flow control BMP (best management practice) called ***"limited infiltration,"*** which was installed to mitigate the stormwater quantity and quality impacts of some or all of the impervious surfaces on your property.

Limited infiltration is a method of soaking runoff from impervious area (such as paved areas and roofs) into the ground. Infiltration devices, such as gravel filled trenches, drywells, and ground surface depressions, facilitate this process by putting runoff in direct contact with the soil and holding the runoff long enough to soak most of it into the ground. To be successful, the soil condition around the infiltration device must be able to soak water into the ground for a reasonable number of years.

Infiltration Devices

The **infiltration devices** used on your property include the following as indicated on the flow control BMP site plan (CHECK THE BOX(ES) THAT APPLY):

❑ gravel filled trenches, ❑ drywells.

MAINTENANCE RESTRICTIONS

The size, placement, and composition of these devices as depicted by the flow control BMP site plan and design details must be maintained and may not be changed without written approval either from the King County Water and Land Resources Division or through a future development permit from King County.

INSPECTION FREQUENCY AND MAINTENANCE GUIDELINES

To be successful, the soil condition around the infiltration device must be able to soak water into the ground for a reasonable number of years.

- Infiltration devices must be inspected annually and after major storm events to identify and repair any physical defects.
- Maintenance and operation of the system should focus on ensuring the system's viability by preventing sediment-laden flows from entering the device. Excessive sedimentation will result in a plugged or non-functioning facility.
- If the infiltration device has a catch basin, sediment accumulation must be removed on a yearly basis or more frequently if necessary.
- Prolonged ponding around or atop a device may indicate a plugged facility. If the device becomes plugged, it must be replaced.
- Keeping the areas that drain to infiltration devices well swept and clean will enhance the longevity of these devices.
- For roofs, frequent cleaning of gutters will reduce sediment loads to these devices.

RECORDING REQUIREMENT

These limited infiltration flow control BMP maintenance and operation instructions must be recorded as an attachment to the required **declaration of covenant and grant of easement** per Requirement 3 of Section C.1.3.4 of the King County *Surface Water Design Manual*. The intent of these instructions is to explain to future property owners, the purpose of the BMP and how it must be maintained and operated. These instructions are intended to be a minimum; the King County Department of Permitting and Environmental Services (DPER) may require additional instructions based on site-specific conditions. See King County's Surface Water Design Manual website for additional information and updates.

TYPICAL LIMITED INFILTRATION APPLICATIONS

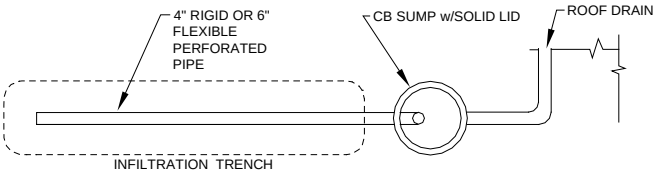

PLAN VIEW
NTS

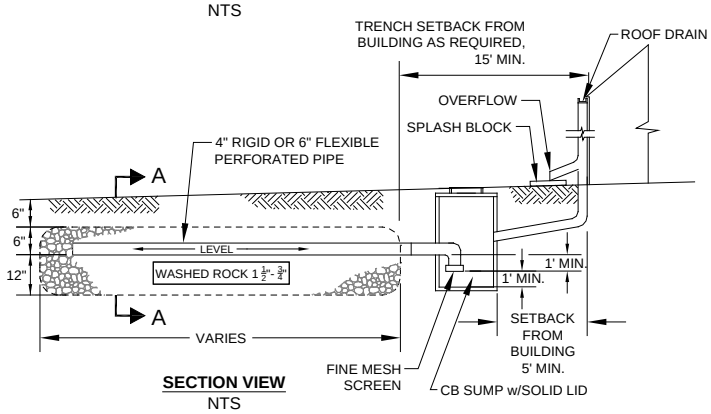

SECTION VIEW
NTS

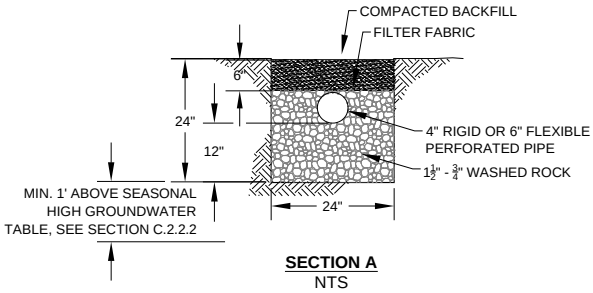

SECTION A
NTS

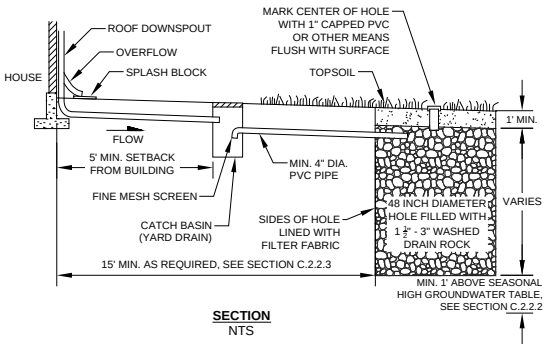

SECTION
NTS

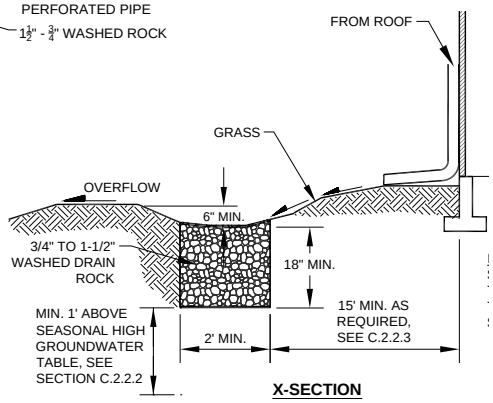

X-SECTION
NTS

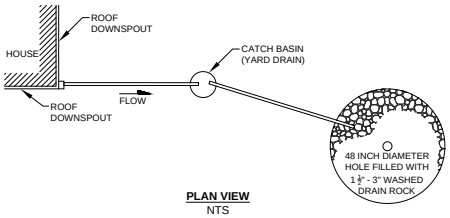

PLAN VIEW
NTS

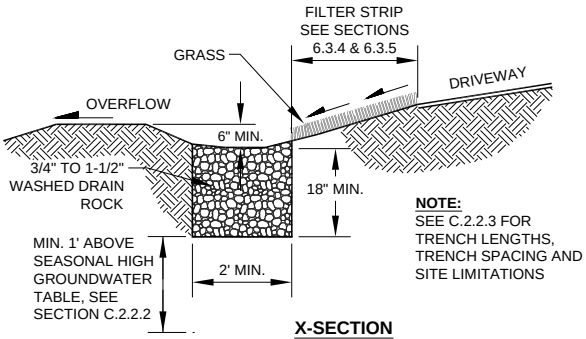

NOTE:
SEE C.2.2.3 FOR TRENCH LENGTHS, TRENCH SPACING AND SITE LIMITATIONS

X-SECTION
NTS

MAINTENANCE INSTRUCTIONS FOR RAINWATER HARVESTING

Your property contains a stormwater management flow control BMP (best management practice) called ***"rainwater harvesting,"*** which was installed to minimize the stormwater runoff impacts of impervious surface on your property.

Rainwater harvesting is a means for the collection and storage of roof runoff for domestic or irrigation use. **Rainwater harvesting systems** include a collection area, a filtering system, a storage device, and an outflow device.

MAINTENANCE RESTRICTIONS

The size, components, and configuration of the rainwater system as depicted by the flow control BMP site plan and design details must be maintained and may not be changed without written approval either from the King County Water and Land Resources Division or through a future development permit from King County.

INSPECTION FREQUENCY AND MAINTENANCE GUIDELINES

Rainwater harvesting systems include a *collection area*, a *filtering system*, a *storage device*, and an *outflow device*:

- The *collection area* (e.g., roof) should be routinely inspected for debris and other material that could impede the entrance and/or exit of surface flows.
- The *filtering system* should be periodically inspected for effectiveness and replaced or replenished as recommended by the manufacturer.
- The *storage device* must be drained completely during the dry season (May 1st - September 30th) in order to provide the needed capacity for an entire wet season.
- A maintenance log should be kept on site with the aforementioned information and dates of maintenance performance. King County inspection staff may request to view the maintenance log at any time.

RECORDING REQUIREMENT

These rainwater harvesting flow control BMP maintenance and operation instructions must be recorded as an attachment to the required **declaration of covenant and grant of easement** per Requirement 3 of Section C.1.3.4 of the King County *Surface Water Design Manual*. The intent of these instructions is to explain to future property owners, the purpose of the BMP and how it must be maintained and operated. These instructions are intended to be a minimum; the King County Department of Permitting and Environmental Services (DPER) may require additional instructions based on site-specific conditions. See King County's Surface Water Design Manual website for additional information and updates.

RAINWATER HARVESTING SYSTEM DESIGN REQUIREMENTS:

- To assure the system functions as designed and provides the required stormwater management, system-specific maintenance and operation instructions must be submitted with the small project drainage plan and approved by DPER. Such instructions should be prepared by the system's manufacturer or installer.
- A minimum 5-foot setback shall be maintained between any part of the rainwater harvesting system and any property line.

TYPICAL ABOVE GROUND RESERVOIR CONFIGURATION (STENSROD, 1978)

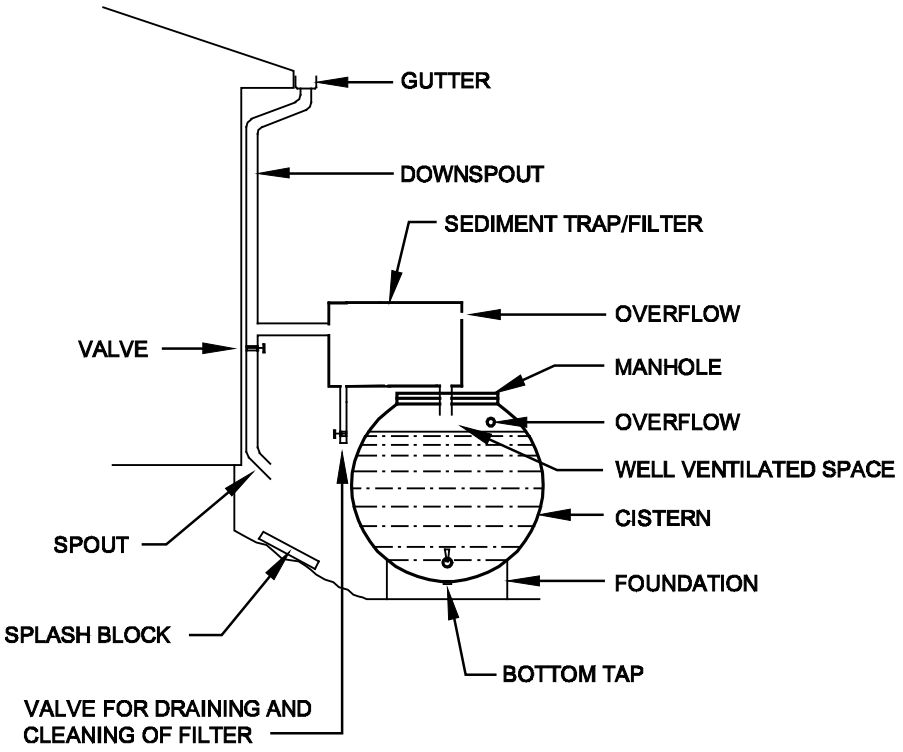

VARIOUS POSSIBLE RESERVOIR CONFIGURATIONS (TYPICAL) (STENSROD, 1978)

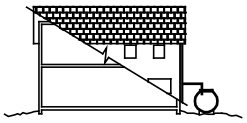

RESERVOIR ABOVE GROUND
(INSULATE IF NECESSARY)

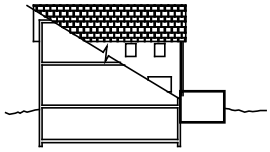

PARTIALLY BURIED RESERVOIR

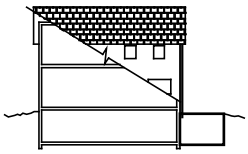

RESERVOIR BURIED OUTSIDE
BASEMENT

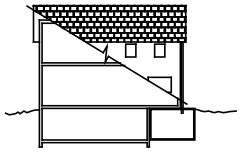

RESERVOIR IN BASEMENT

MAINTENANCE INSTRUCTIONS FOR VEGETATED ROOFS

Your property contains a stormwater management flow control BMP (best management practice) called a ***"vegetated roof,"*** which was installed to minimize the stormwater runoff impacts of the impervious surfaces on your property.

Vegetated roofs (also called green roofs) consist of a pervious growing medium, plants, and a moisture barrier. The benefits of this device are a reduction in runoff peaks and volumes due to the storage capabilities of the soil and increased rate of evapotranspiration.

MAINTENANCE RESTRICTIONS

- The composition and area of vegetated roof as depicted by the flow control BMP site plan and design details must be maintained and may not be changed without written approval either from the King County Water and Land Resources Division or through a future development permit from King County.
- Vegetated roofs must not be subject to any use that would significantly compact the soil.

INSPECTION FREQUENCY AND MAINTENANCE GUIDELINES

Vegetated roofs (also called green roofs) consist of a *pervious growing medium*, *plants*, and a *moisture barrier*:

- Vegetated roofs must be inspected annually for physical defects and to make sure the vegetation is in good condition.
- If erosion channels or bare spots are evident, they should be stabilized with additional soil similar to the original material.
- A supplemental watering program may be needed the first year to ensure the long-term survival of the roof's vegetation.
- Vegetation should be maintained as follows:

  (1) vegetated roofs must not be subject to any use that would significantly compact the soil;

  (2) replace all dead vegetation as soon as possible;

  (3) remove fallen leaves and debris;

  (4) remove all noxious vegetation when discovered;

  (5) manually weed without herbicides or pesticides.

RECORDING REQUIREMENT

These vegetated roof flow control BMP maintenance and operation instructions must be recorded as an attachment to the required **declaration of covenant and grant of easement** per Requirement 3 of Section C.1.3.4 of the King County *Surface Water Design Manual*. The intent of these instructions is to explain to future property owners, the purpose of the BMP and how it must be maintained and operated. These instructions are intended to be a minimum; the King County Department of Permitting and Environmental Services (DPER) may require additional instructions based on site-specific conditions. See King County's Surface Water Design Manual website for additional information and updates.

TYPICAL VEGETATED ROOF CROSS-SECTION

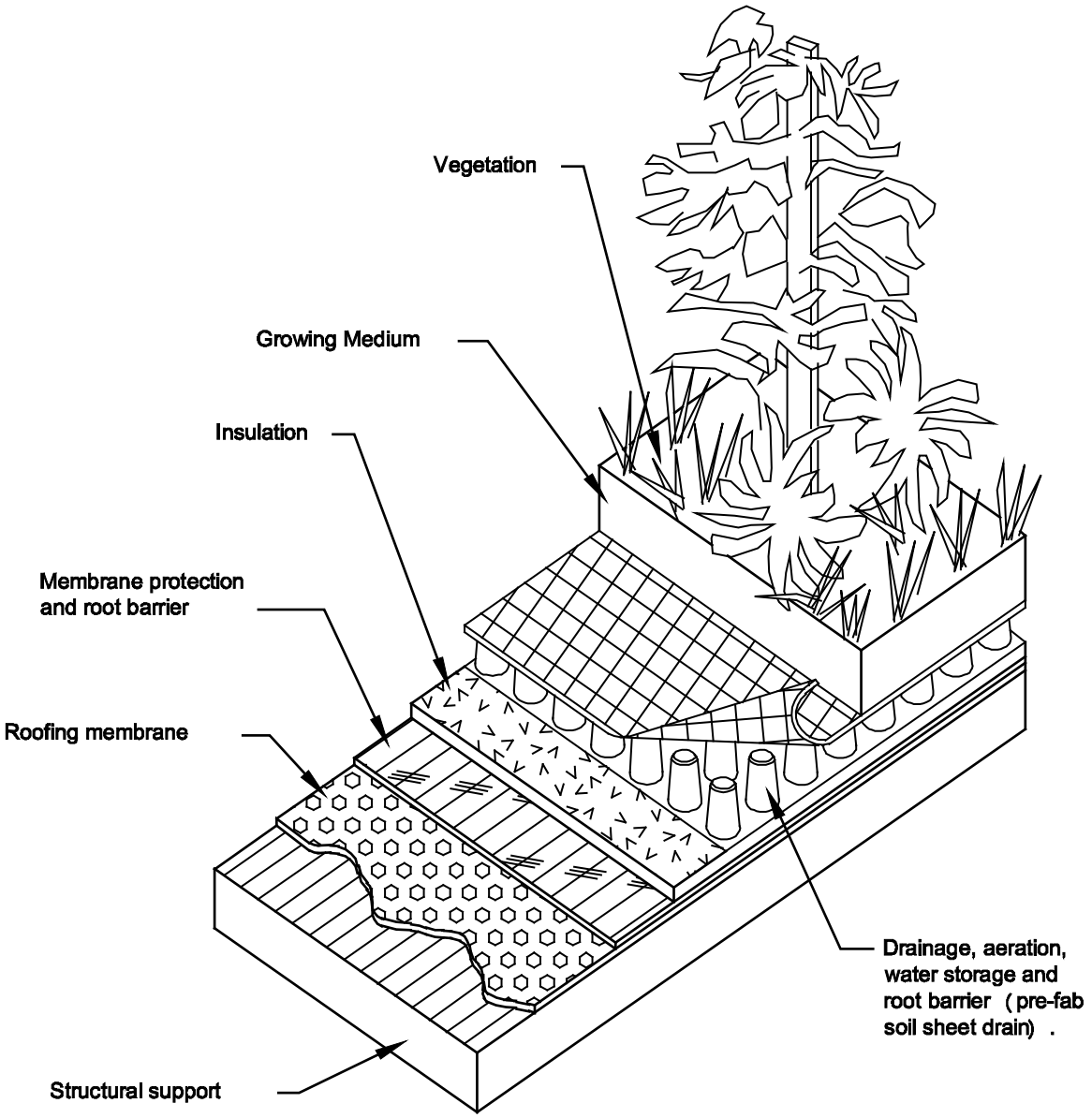

Note:
This example shows a two-part prefabricated soil sheet drain and protection board.

MAINTENANCE INSTRUCTIONS FOR REDUCED IMPERVIOUS SURFACE BMP: *RESTRICTED FOOTPRINT*

Your property contains a stormwater management flow control BMP (best management practice) known as ***"restricted footprint,"*** the practice of *restricting the amount of impervious surface that may be added* to a property so as to minimize the stormwater runoff impacts caused by impervious surface.

MAINTENANCE RESTRICTIONS

The **total impervious surface** on your property **may not exceed** _____ square feet without written approval either from the King County Water and Land Resources Division or through a future development permit from King County.

RECORDING REQUIREMENT

These reduced impervious surface flow control BMP maintenance and operation instructions must be recorded as an attachment to the required **declaration of covenant and grant of easement** per Requirement 3 of Section C.1.3.4 of the King County *Surface Water Design Manual*. The intent of these instructions is to explain to future property owners, the purpose of the BMP and how it must be maintained and operated. These instructions are intended to be a minimum; the King County Department of Permitting and Environmental Services (DPER) may require additional instructions based on site-specific conditions. See King County's Surface Water Design Manual website for additional information and updates.

MAINTENANCE INSTRUCTIONS FOR REDUCED IMPERVIOUS SURFACE BMP: *WHEEL STRIP DRIVEWAY*

Your property contains a stormwater management flow control BMP (best management practice) called a ***"wheel strip driveway,"*** which was installed to minimize or mitigate for the stormwater runoff impacts of some or all of the impervious surfaces on your property.

MAINTENANCE RESTRICTIONS

The placement and composition of the wheel strip driveway as depicted by the flow control BMP site plan and design details must be maintained and may not be changed without written approval either from the King County Water and Land Resources Division or through a future development permit from King County.

RECORDING REQUIREMENT

These reduced impervious surface flow control BMP maintenance and operation instructions must be recorded as an attachment to the required **declaration of covenant and grant of easement** per Requirement 3 of Section C.1.3.4 of the King County *Surface Water Design Manual*. The intent of these instructions is to explain to future property owners, the purpose of the BMP and how it must be maintained and operated. These instructions are intended to be a minimum; the King County Department of Permitting and Environmental Services (DPER) may require additional instructions based on site-specific conditions. See King County's Surface Water Design Manual website for additional information and updates.

WHEEL STRIP DRIVEWAY DESIGN REQUIREMENTS for the typical 10-foot driveway width:

- The two **pavement strips** must be no more than 2.5-feet wide.
- At least 4 feet of the 10-foot driveway width must be **amended soil planted with grass**.
- The **amended soil** must consist of at least 4 inches of well-rotted compost tilled into the upper 8 inches of the soil between the impervious strips.

MAINTENANCE INSTRUCTIONS FOR REDUCED IMPERVIOUS SURFACE BMP: *MINIMUM DISTURBANCE FOUNDATION*

Your property contains a stormwater management flow control BMP (best management practice) known as a ***"minimum disturbance foundation,"*** which was installed to minimize or mitigate for the stormwater runoff impacts of some or all of the impervious surfaces on your property.

This means that all or a portion of the finished living space in your house is elevated over a pervious surface through the use of piers or piles. The pervious surface is intended to provide additional capacity to absorb and store the stormwater runoff from your roof and surrounding areas.

MAINTENANCE RESTRICTIONS

- The design of this system as depicted by the flow control BMP site plan and design details must be maintained and may not be changed without written approval either from the King County Water and Land Resources Division or through a future development permit from King County.
- In addition, the pervious surface beneath the elevated portion of your house must not be used in manner that compacts the soil or provides an opportunity for pollutants to enter the soil or storm runoff.

RECORDING REQUIREMENT

These reduced impervious surface flow control BMP maintenance and operation instructions must be recorded as an attachment to the required **declaration of covenant and grant of easement** per Requirement 3 of Section C.1.3.4 of the King County *Surface Water Design Manual*. The intent of these instructions is to explain to future property owners, the purpose of the BMP and how it must be maintained and operated. These instructions are intended to be a minimum; the King County Department of Permitting and Environmental Services (DPER) may require additional instructions based on site-specific conditions. See King County's Surface Water Design Manual website for additional information and updates.

MINIMUM DISTURBANCE FOUNDATION DESIGN REQUIREMENTS:

- The **pervious surface beneath** the elevated portion of the structure must be either undisturbed native soil or amended soil. Any amended soil must consist of at least 4 inches of well-rotted compost tilled into the upper 8 inches of the soil.
- **Runoff** from the structure must be discharged via downspouts or sheet flow onto a vegetated surface or into a 4 to 6-inch gravel bed within close proximity of the elevated structure. Runoff discharging from downspouts onto a vegetated surface must be via splash blocks.

MAINTENANCE INSTRUCTIONS FOR REDUCED IMPERVIOUS SURFACE BMP: *OPEN GRID DECKING OVER PERVIOUS SURFACE*

Your property contains a stormwater management flow control BMP (best management practice) called ***"open grid decking over pervious surface,"*** which was installed to minimize or mitigate for the stormwater runoff impacts of some or all of the impervious surfaces on your property.

The decking has evenly spaced openings that allow rain water to reach the uncompacted soil below, where it has an opportunity to soak into the ground.

MAINTENANCE RESTRICTIONS

- The area and openings of the decking as depicted by the flow control BMP site plan and design details must be maintained and may not be changed without written approval either from the King County Water and Land Resources Division or through a future development permit from King County.
- In addition, the pervious surface beneath the decking must not be used in manner that compacts the soil.

INSPECTION FREQUENCY AND MAINTENANCE GUIDELINES

- Check monthly or as needed (e.g., weekly during the autumn season) to assure openings in the decking are not blocked and are draining freely. Sweep and/or vacuum as needed.
- Avoid the use of chemicals or other pollutants on the deck where they have an opportunity to pass through the decking and soak into the ground.

RECORDING REQUIREMENT

These reduced impervious surface flow control BMP maintenance and operation instructions must be recorded as an attachment to the required **declaration of covenant and grant of easement** per Requirement 3 of Section C.1.3.4 of the King County *Surface Water Design Manual*. The intent of these instructions is to explain to future property owners, the purpose of the BMP and how it must be maintained and operated. These instructions are intended to be a minimum; the King County Department of Permitting and Environmental Services (DPER) may require additional instructions based on site-specific conditions. See King County's Surface Water Design Manual website for additional information and updates.

OPEN GRID DECKING DESIGN REQUIREMENTS:

- The pervious surface beneath the decking must be either undisturbed native soil or amended soil.
- Any amended soil must consist of at least 4 inches of well-rotted compost tilled into the upper 8 inches of the soil.

RECORDING REQUESTED BY AND
WHEN RECORDED MAIL TO:

_____

_____

_____

_____

DECLARATION OF COVENANT
FOR IMPERVIOUS SURFACE LIMIT

Grantor: _____

Grantee: King County

Legal Description: _____

_____

_____

Additional Legal(s) on: _____

Assessor's Tax Parcel ID#: _____

IN CONSIDERATION of the approved King County _____ permit for application No. _____ relating to real property legally described above, the undersigned as Grantor(s), declares(declare) that the above described property is hereby established as having a limit to the amount of impervious surface allowed on the property for the purpose of limiting stormwater flows and is subject to the following restrictions.

The Grantor(s) hereby covenants(covenant) and agrees(agree) as follows: no more than _____ square feet of impervious surface coverage is allowed on the property. Impervious surface means a hard surface area that either prevents or retards the entry of water into the soil mantle as under natural conditions before development; or that causes water to run off the surface in greater quantities or at an increased rate of flow from the flow present under natural conditions prior to

development. Common impervious surfaces include, but are not limited to, roof, walkways, patios, driveways, parking lots, or storage areas, areas that are paved, graveled or made of packed or oiled earthen materials, or other surfaces that similarly impede the natural infiltration of surface and storm water. King County or its municipal successors shall have a nonexclusive perpetual access easement on the Property in order to ingress and egress over the Property for the sole purposes of inspecting and monitoring the Property's impervious surface coverage.

This easement/restriction is binding upon the Grantor(s), its heirs, successors, and assigns unless or until a new drainage or site plan is reviewed and approved by the Department of Development and Environmental Services or its successor.

IN WITNESS WHEREOF, this Declaration of Covenant is executed this _____ day of _____, 20_____.

_____
GRANTOR, owner of the Property

_____
GRANTOR, owner of the Property

STATE OF WASHINGTON)
COUNTY OF KING)ss.

On this day personally appeared before me:

_____, to me known to be the individual(s) described in and who executed the within and foregoing instrument and acknowledged that they signed the same as their free and voluntary act and deed, for the uses and purposes therein stated.

Given under my hand and official seal this _____ day of _____, 20_____.

_____

_____
Printed name
Notary Public in and for the State of Washington, residing at

_____

My appointment expires _____

MAINTENANCE INSTRUCTIONS FOR NATIVE GROWTH RETENTION CREDIT

Your property contains a stormwater management flow control BMP (best management practice) known as ***"native growth retention,"*** the practice of preserving a portion of a property in a native vegetated condition (e.g., forest) so as to minimize increases in stormwater runoff from clearing and to offset the stormwater runoff impacts caused by impervious surfaces on your property.

This native vegetated area on your property was *set aside by covenant* as "native growth retention area."

MAINTENANCE RESTRICTIONS

The **"native growth retention area"** is delineated on the flow control BMP site plan attached to the covenant. The trees, vegetation, ground cover, and soil conditions in this area may not be disturbed, except as allowed by the following provisions:

1. Trees may be harvested in accordance with a King County-approved forest management plan.
2. Individual trees that have a structural defect due to disease or other defects, and which threaten to damage a structure, road, parking area, utility, or place of employment or public assembly, or block emergency access, may be topped, pruned, or removed as needed to eliminate the threat.
3. Dead or fallen trees, tree limbs within ten feet of the ground, and branches overhanging a residence may be removed to reduce the danger of wildfire.
4. Noxious weeds (i.e., plant species listed on the State noxious weed list in Chapter 16-750 WAC) and invasive vegetation (i.e., plant species listed as obnoxious weeds on the noxious weed list adopted by the King County Department of Natural Resources and Parks) may be removed.
5. Passive recreation uses and related facilities, including pedestrian, equestrian community and bicycle trails, nature viewing areas, fishing and camping areas, and other similar uses that do not require permanent structures, are allowed if clearing and soil compaction associated with these uses and facilities does not exceed eight percent of the native growth retention area.

RECORDING REQUIREMENT

These native growth retention credit flow control BMP maintenance and operation instructions must be recorded as an attachment to the required **declaration of covenant and grant of easement** per Requirement 3 of Section C.1.3.4 of the King County *Surface Water Design Manual*. The intent of these instructions is to explain to future property owners, the purpose of the BMP and how it must be maintained and operated. These instructions are intended to be a minimum; the King County Department of Permitting and Environmental Services (DPER) may require additional instructions based on site-specific conditions. See King County's Surface Water Design Manual website for additional information and updates.

MAINTENANCE INSTRUCTIONS FOR A PERFORATED PIPE CONNECTION

Your property contains a stormwater management flow control BMP (best management practice) called a ***"perforated pipe connection,"*** which was installed to reduce the stormwater runoff impacts of some or all of the impervious surface on your property.

A perforated pipe connection is a length of drainage conveyance pipe with holes in the bottom, designed to "leak" runoff, conveyed by the pipe, into a gravel filled trench where it can be soaked into the surrounding soil. The connection is intended to provide opportunity for infiltration of any runoff that is being conveyed from an impervious surface (usually a roof) to a local drainage system such as a ditch or roadway pipe system.

MAINTENANCE RESTRICTIONS

- The size and composition of the perforated pipe connection as depicted by the flow control BMP site plan and design details must be maintained and may not be changed without written approval either from the King County Water and Land Resources Division or through a future development permit from King County.
- The soil overtop of the perforated portion of the system must not be compacted or covered with impervious materials.

RECORDING REQUIREMENT

These **perforated pipe connection** flow control BMP maintenance and operation instructions must be recorded as an attachment to the required **declaration of covenant and grant of easement** per Requirement 3 of Section C.1.3.4 of the King County *Surface Water Design Manual*. The intent of these instructions is to explain to future property owners, the purpose of the BMP and how it must be maintained and operated. These instructions are intended to be a minimum; the King County Department of Permitting and Environmental Services (DPER) may require additional instructions based on site-specific conditions. See King County's Surface Water Design Manual website for additional information and updates.

TYPICAL PERFORATED PIPE CONNECTION FOR A SINGLE FAMILY RESIDENCE

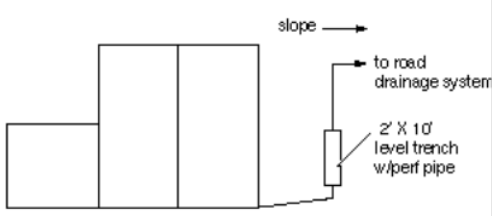

PLAN VIEW OF ROOF
NTS
(TYPICAL)

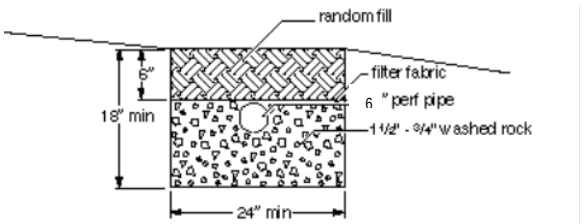

TRENCH X-SECTION
NTS

KING COUNTY, WASHINGTON
SURFACE WATER DESIGN MANUAL

REFERENCE 8-O

CLEARING LIMIT COVENANT

RECORDING REQUESTED BY AND
WHEN RECORDED MAIL TO:

_____

_____

_____

_____

DECLARATION OF COVENANT
FOR CLEARING LIMIT

Grantor: _____

Grantee: King County

Legal Description: _____

_____

_____

Additional Legal(s) on: _____

Assessor's Tax Parcel ID#: _____

IN CONSIDERATION of the approved King County _____ permit for application No. _____ relating to the real property ("Property") described above, the Grantor(s), the owner(s) in fee of that Property, hereby declares (declare) that the Property is established as having a native growth retention area for the purpose of dispersing and treating stormwater flows and is subject to restrictions applying to vegetation removal in all designated areas shown in Exhibit A attached hereto, and hereby covenants (covenant) and agrees (agree) as follows:

1. Any alterations to critical areas, their buffers, and native growth retention areas shall be pursuant to applicable King County Code.

2. The property within the native growth protection area (shown in Attachment A) shall be maintained in a forested condition, with the exception of open water and existing non-forested native wetland plant communities. The following activities are allowed and must be done in a manner that maintains forested hydrologic conditions and soil stability:

a. Removal of noxious weeds and non-native vegetation using hand equipment, provided that those areas are replanted with appropriate native vegetation.

b. Removal of dangerous and diseased trees.

c. Passive recreation and related activities including trails, nature viewing, fishing, camping areas, and other similar activities that do not require permanent structures, provided that cleared areas and areas of compacted soil associated with these areas and facilities do not exceed eight percent of the native growth retention area.

d. The native growth retention area may contain utilities and utility easements including flow control BMPs, but not including septic systems.

e. Limited trimming and pruning of vegetation for the creation and maintenance of views per applicable King County Code.

f. Timber harvest in accordance with a King County-approved forest management plan and appropriate permits.

3. King County shall have a nonexclusive perpetual access easement on the Property in order to ingress and egress over the Property for the sole purposes of inspecting and monitoring the Property's native growth retention area.

4. This easement/restriction is binding upon the Grantor(s), his/her (their) heirs, successors and assigns unless or until a new drainage or site plan is reviewed and approved by the Department of Development and Environmental Services or its successor.

IN WITNESS WHEREOF, this Declaration of Covenant is executed this _____ day of _____, 20_____.

_____
GRANTOR, owner of the Property

_____
GRANTOR, owner of the Property

STATE OF WASHINGTON)
COUNTY OF KING)ss.

On this day personally appeared before me:

_____, to me known to be the individual(s) described in and who executed the within and foregoing instrument and acknowledged that they signed the same as their free and voluntary act and deed, for the uses and purposes therein stated.

Given under my hand and official seal this _____ day of _____, 20_____.

_____

_____
Printed name
Notary Public in and for the State of Washington, residing at

_____

My appointment expires _____

KING COUNTY, WASHINGTON
SURFACE WATER DESIGN MANUAL

REFERENCE 8-P

RIVER PROTECTION EASEMENT

AFTER RECORDING RETURN TO:

King County Property Services Division
500A King County Administration Building
500 Fourth Avenue
Seattle, WA 98104

Document Title: River Protection Easement
Reference Number of Related Document:
Grantor(s):
Grantee(s): King County
Legal Description:
Assessor's Tax Parcel Number:

RIVER PROTECTION EASEMENT

For valuable consideration, receipt of which is hereby acknowledged, the GRANTOR(S),

_____
owner(s) in fee of that certain parcel of land (the "Property"), legally described as follows:
_____
_____
_____
_____

hereby grant(s) to KING COUNTY, a political subdivision of the State of Washington , its successors and assigns, agents and licensees (GRANTEE), a perpetual easement for the purposes of accessing and constructing, inspecting, monitoring, reconstructing, maintaining, repairing, modifying, and removing river bank protection and/or other flood related works, including installing, inspecting, maintaining and removing all vegetation and any other appurtenances

thereto across, in, under, on, over and upon the following portions of the above described Property:

> All portions of the above described parcel that are riverward of a line that is parallel to and thirty (30) feet landward of the stable top of the river bank on the _____ River ("Easement Area"), as constructed or reconstructed, together with reasonable ingress and egress upon the Property to access the Easement Area.

Grantee shall have the right at such time as may be necessary and at the Grantee's sole discretion, to enter upon the Property and to have unimpeded access to, in and through the Easement Area for the purposes of exercising the Grantee's rights as described herein.

Grantor agrees not to plant non-native vegetation within the Easement Area and not to remove or otherwise alter any improvements installed by Grantee, including any native vegetation that may be planted and any flood protection works that may be constructed, within the Easement Area, without the prior approval of Grantee. Grantor further agrees not to use herbicides within the Easement Area without the prior approval of Grantee. Nothing contained herein shall be construed as granting any license, permit or right, otherwise required by law, to Grantor with respect to the Property and the Easement Area.

For the purposes of this river protection easement, the term "native vegetation" shall mean vegetation comprised of plant species, other than noxious weeds (as identified on the State of Washington noxious weed list found at Washington Administrative Code Chapter 16-750, as amended from time to time), which are indigenous to the coastal region of the Pacific Northwest and which reasonably could have been expected to naturally occur at the site.

Neither Grantor nor Grantee is hereby obligated to future maintenance, repair or other action related to the above-described exercise of easement rights. This river protection easement and/or any flood related works constructed or to be constructed within the Easement Area shall not be construed as granting any rights to any third person or entity, or as a guarantee of any protection from flooding or flood damage, and nothing contained herein shall be construed as waiving any immunity to liability granted to Grantee by any state statute, including Chapter 86.12 of the Revised Code of Washington, or as otherwise granted or provided for by law.

The rights, conditions, and provisions of this easement shall inure to the benefit of and be binding upon the heirs, executors, administrators, and successors in interest and assigns of Grantor and Grantee.

_____	_____
GRANTOR	GRANTOR

STATE OF WASHINGTON)
) ss.
COUNTY OF KING)

On this _____ day of _____, 20___, before me, the undersigned, a Notary Public in and for the State of Washington, duly commissioned and sworn, personally appeared _____, to me known to be the individual described in and who executed the foregoing instrument, and acknowledged to me that he/she signed and sealed the said instrument as _____ free and voluntary act and deed for the uses and purposes therein mentioned.

Given under my hand and official seal the _____ day of _____, 20___.

_____
NOTARY PUBLIC in and for the
State of Washington, residing
at _____
My commission expires _____

J\mi20-easement

KING COUNTY, WASHINGTON
SURFACE WATER DESIGN MANUAL

REFERENCE 8-Q

LEACHABLE METALS COVENANT

RECORDING REQUESTED BY AND
WHEN RECORDED MAIL TO:

_____

_____

_____

_____

DECLARATION OF COVENANT
PROHIBITING USE OF LEACHABLE METALS

Grantor: _____

Grantee: King County

Legal Description: _____

_____

_____

Additional Legal(s) on: _____

Assessor's Tax Parcel ID#: _____

IN CONSIDERATION of the approved King County _____ permit for application No. _____ relating to real property legally described above, the undersigned as Grantor(s), declares(declare) that the above described property is hereby established as having a prohibition on the use of leachable metals on those portions of the property exposed to the weather for the purpose of limiting metals in stormwater flows and is subject to the following restrictions.

The Grantor(s) hereby covenants(covenant) and agrees(agree) as follows: no leachable metal surfaces exposed to the weather will be allowed on the property. Leachable metal surfaces means a surface area that consists of or is coated with a non-ferrous metal that is soluble in water. Common leachable metal surfaces include, but are not limited to, galvanized steel roofing, gutters, flashing, downspouts, guardrails, light posts, and copper roofing. King County or its municipal successors shall

have a nonexclusive perpetual access easement on the Property in order to ingress and egress over the Property for the sole purposes of inspecting and monitoring that no leachable metal is present on the Property.

This easement/restriction is binding upon the Grantor(s), its heirs, successors, and assigns unless or until a new drainage or site plan is reviewed and approved by the Department of Development and Environmental Services or its successor.

IN WITNESS WHEREOF, this Declaration of Covenant is executed this _____ day of _____, 20_____.

_____
GRANTOR, owner of the Property

_____
GRANTOR, owner of the Property

STATE OF WASHINGTON)
COUNTY OF KING)ss.

On this day personally appeared before me:

_____, to me known to be the individual(s) described in and who executed the within and foregoing instrument and acknowledged that they signed the same as their free and voluntary act and deed, for the uses and purposes therein stated.

Given under my hand and official seal this _____ day of _____, 20_____.

_____

_____
Printed name
Notary Public in and for the State of Washington, residing at

_____

My appointment expires _____

KING COUNTY, WASHINGTON
SURFACE WATER DESIGN MANUAL

REFERENCE 9

INTERIM CHANGES TO REQUIREMENTS

9-A Blanket Adjustments

9-B Administrative Changes

KING COUNTY, WASHINGTON
SURFACE WATER DESIGN MANUAL

REFERENCE 9-A

BLANKET ADJUSTMENTS

None at this time

KING COUNTY, WASHINGTON
SURFACE WATER DESIGN MANUAL

REFERENCE 9-B

ADMINISTRATIVE CHANGES

None at this time

KING COUNTY, WASHINGTON
SURFACE WATER DESIGN MANUAL

REFERENCE 10

KING COUNTY-IDENTIFIED WATER QUALITY PROBLEMS

None at this time

KING COUNTY, WASHINGTON
SURFACE WATER DESIGN MANUAL

REFERENCE 11

MATERIALS

11-A (VACANT)

11-B (VACANT)

11-C Bioretention Soil Media Standard Specifications

11-D (VACANT)

11-E Roofing Erodible or Leachable Materials

KING COUNTY, WASHINGTON
SURFACE WATER DESIGN MANUAL

REFERENCE 11-C

BIORETENTION SOIL MEDIA STANDARD SPECIFICATIONS

(This page intentionally left blank)

REFERENCE 11-C

BIORETENTION SOIL MEDIA STANDARD SPECIFICATIONS

11-C.1 COMPOST

Compost products shall be the result of the biological degradation and transformation of uncontaminated biological organic materials under controlled conditions designed to promote aerobic decomposition. Compost shall be stable with regard to oxygen consumption, carbon dioxide generation, and seed germination and seedling vigor. Compost shall be mature with regard to its suitability for use in stormwater facilities and BMPs, post-construction soil amendment, general landscaping, or an erosion control BMP as defined below.

Compost shall be tested at a minimum in accordance with the U.S. Composting Council "Testing Methods for the Examination of Compost and Composting" (TMECC), as established in the Composting Council's "Seal of Testing Assurance" (STA) program. Most Washington compost facilities now use these tests. All tests must be done on compost screened to specification for its intended use.

11-C.1.A SPECIFICATION 1 COMPOST

1. Compost must be produced at a facility that is permitted by the jurisdictional health authority. Permitted compost facilities in Washington are included on a list available at http://www.ecy.wa.gov/programs/swfa/organics/soil.html .
2. Compost must meet the definition of "composted material" in WAC 173-350-100, and must comply with testing parameters and other standards including not exceeding contaminant limits identified in Table 220-B. Testing Parameters, in WAC 173-350-220; and "Physical contaminants" (as defined in WAC 173-350-100) content less than 1% by weight (TMECC 03.08-A) total, not to exceed 0.25 percent film plastic by dry weight.
3. The compost product must originate a minimum of 65 percent by volume from recycled plant waste comprised of "yard debris," "crop residues," and "bulking agents" as those terms are defined in WAC 173-350-100. A maximum of 35 percent by volume of "post-consumer food waste" as defined in WAC 173-350-100 may be substituted for recycled plant waste. Biosolids, manure, and/or bedding straw or wood chips or shavings containing animal excreta are not allowed.
4. Wood waste from chemically treated lumber and manufactured wood products containing adhesives or any other chemical is not allowed; painted and stained wood are not allowed; and only sawdust from virgin lumber allowed. No other toxic or otherwise harmful materials are allowed.
5. For *high-density residential subdivision development, multi-family, commercial, and industrial projects,* and *road projects considered high ADT projects,*[*] the Manufacturer or Vendor shall provide to the end buyer a list of feedstock sources by percentage by volume in the final compost product.
6. Compost shall have a moisture content that has no visible free water or dust produced when handling the material.
7. Compost shall have an organic matter content of 40 percent to 65 percent by dry weight as determined by loss of ignition test method ASTM D 2974, or by U.S. Composting Council TMECC 05.07A "Loss-On-Ignition Organic Matter Method (LOI)".

[*] Land uses as described in Bullets 1, 2, and 3, SWDM Section 1.2.8.1, Subsection A "Basic WQ Treatment Areas, Required Treatment Menu"

8. Compost shall have a carbon to nitrogen ratio below 25:1, although the carbon to nitrogen ratio may be as high as 35:1 for plantings composed entirely of plants native to the Puget Sound Lowlands region. The carbon to nitrogen ratio shall be calculated on a dry weight basis using TMECC 5.02A ("Carbon to Nitrogen Ratio"), which uses TMECC 04.01A, "Organic Carbon" divided by the dry weight of "Total N" (TMECC 04.02D).
9. Compost pH shall be between 6.0 and 8.5 when tested in accordance with U.S. Composting Council TMECC 04.11-A, "1:5 Slurry pH"
10. Soluble salt content shall be less than 4.0 dS/m (mmhos/cm) when tested in accordance with U.S. Composting Council TMECC 04.10 "Electrical Conductivity, 1:5 Slurry Method, Mass Basis".
11. Compost maturity indicators from a cucumber bioassay (TMECC 05.05-A “Germination Seedling Emergence and Relative Growth) must be greater than 80%for both emergence and vigor”).
12. Stability shall be 7-mg CO_2 – C/g OM/day or below in as determined by U.S. Composting Council TMECC 05.08-B "Carbon Dioxide Evolution Rate", to establish low oxygen use and low CO_2 generation rates.

Compost shall be screened to the Fine Compost size gradation specification in Section 11-C.1.C of this Reference.

11-C.1.B SPECIFICATION 2 COMPOST

1. Specification 2 Compost manufacturing, feedstocks, and testing are all identical to Specification 1 Compost except that:
   a. A maximum of 35 percent by volume of biosolids or manure may be substituted for recycled plant waste.
   b. Compost may be fine or coarse gradation depending on use and need to meet other screened material quality criteria.
   c. Carbon to Nitrogen ratio may be up to 40:1 for coarse compost to be used as a surface mulch (not in a soil mix).

11-C.1.C COMPOST SCREENING SIZE GRADATIONS

Where compost gradation is specified, it must meet the following size gradations when tested in accordance with the U.S. Composting Council “Test Methods for the Examination of Compost and Composting” (TMECC) Test Method 02.02-B.

Fine Compost shall meet the following gradation by dry weight:

Minimum percent passing 2” sieve	100%
Minimum percent passing 1” sieve	99%
Minimum percent passing 5/8” sieve	90%
Minimum percent passing ¼” sieve	75%

Coarse Compost shall meet the following gradation by dry weight:

Minimum Percent passing 3” sieve	100%
Minimum Percent passing 1” sieve	90%
Minimum Percent passing ¾” sieve	70%
Minimum Percent passing ¼” sieve	40%

11-C.1.D COMPOST ACCEPTANCE REQUIREMENTS

The Contractor shall submit the following information to the King County Department of Permitting and Environmental Review (DPER) Engineer for approval:

1. If the manufacturer is not exempt under Table 220-A, "Terms and Conditions for Solid Waste Permit Exemptions", a copy of the Solid Waste Handling Permit issued to the compost manufacturer by the Jurisdictional Health Department in accordance with WAC 173-350 (Minimum Functional Standards for Solid Waste Handling) or for biosolids composts a copy of the Coverage Under the General Permit for Biosolids Management issued to the manufacturer by the Department of Ecology in accordance with WAC 173-308 (Biosolids Management).
2. The Applicant shall provide written verification and lab analyses that the material complies with the processes, testing, and standards specified in WAC 173-350 and these Specifications. An independent Seal of Testing Assurance (STA) Program certified laboratory† or a laboratory accredited by WA Ecology‡ for the specified methods shall perform the analyses. Lab analysis shall be for the compost delivered on site for project use.
3. A copy of the STA laboratory's Seal of Testing Assurance STA certification as issued by the U.S. Composting Council, or a copy of the Ecology-certified laboratory's accreditation for the specified methods.

11-C.2 BIORETENTION SOIL MIX SPECIFICATIONS

Follow the specification below for the approved default bioretention soil mix. Alterations to this specification require an approved adjustment.

11-C.2.A DEFAULT BIORETENTION SOIL MIX

Bioretention Soil Mix (BSM) shall be a well-blended homogeneous mixture of Bioretention Mineral Aggregate and Bioretention Compost measured on a volume basis composed of:

- 35 to 40 percent by volume Specification 1 Compost per Section 11-C.1.A above and Section11-C.2.B below.
- 60 to 65 percent by volume Bioretention Mineral Aggregate per Section 11-C.2.C below.

Projects which prefer to create a custom Bioretention Soil Mix rather than using the default requirement above must demonstrate compliance with criteria as described in Ecology's *Stormwater Management Manual for Western Washington (2014) Volume V – Runoff Treatment BMPs*, except that any more stringent compost criteria required by this Reference 11-C are applicable.

11-C.2.B BIORETENTION COMPOST

Bioretention Compost shall be Specification 1, Fine Compost per Sections 11-C.1.A and 11-C.1.C of this Reference. Fine Specification 1 Compost shall be used for Bioretention Soil Mix and for any compost used to amend bioretention cell soil.

11-C.2.C BIORETENTION SOIL MIX AGGREGATE

Aggregate Gradation

The following table provides a gradation guideline for the aggregate component of a Bioretention Soil Mix specification in western Washington. This sand gradation is often supplied as a well-graded utility or screened. With compost, this blend provides enough fines for adequate water retention, hydraulic

† A list of STA certified laboratories can be found at http://compostingcouncil.org/labs/.

‡ A list of WA Ecology accredited laboratories can be found at http://www.ecy.wa.gov/programs/eap/labs/. Only laboratories certified for the specified methods may be used for compost testing.

conductivity within recommended range (see below), pollutant removal capability, and plant growth characteristics for meeting design guidelines and objectives.

TABLE 11-C.2.A BIORETENTION SOIL MIX MINERAL AGGREGATE GRADATION	
Sieve Size	Percent Passing
3/8”	100
#4	95-100
#10	75-90
#40	25-40
#100	4-10
#200	2-4

Where existing soils meet the above aggregate gradation, those soils may be amended rather than importing mineral aggregate.

11-C.3 BIORETENTION MULCH

Mulch may only be composed of either chipped wood as defined in Section 11-C.3.A, or compost as defined in Section 11-C.3.B. Mulch may not be made of synthetic materials including but not limited to recycled tire material, virgin rubber material, plastics; or pre-or post-consumer cardboard.

11-C.3.A ARBORIST'S WOOD CHIP MULCH

Arborist Wood Chip Mulch shall be coarse ground wood chips (approximately 1/2” to 6” along the longest dimension) derived from the mechanical grinding or shredding of the above-ground portions of trees. It may contain wood, wood fiber, bark, branches, and leaves, but may not contain visible amounts of soil. It shall be free of weeds and weed seeds including but not limited to plants on the King County Noxious Weed list available at: www.kingcounty.gov/weeds, and shall be free of invasive plant portions capable of re-sprouting, including but not limited to horsetail, ivy, clematis, knotweed, etc. It may not contain more than 0.5% by dry weight of manufactured inert material (plastic, concrete, ceramics, metal, etc.).

Arborist Wood Chip Mulch, when tested, shall meet the following loose volume gradation:

TABLE 11-C.3.A ARBORIST WOOD MULCH GRADATION	
Sieve Size	Percent Passing
2”	95 – 100
1”	70 – 100
5/8	0 – 50
No. 4	0 – 30

Prior to delivery, the Applicant shall provide the following:

1. The source of the product and species of trees included in it;
2. A sieve analysis verifying the product meets the above size gradation requirement;
3. A representative sample of the product for County approval.

11-C.3.B COMPOST MULCH SPECIAL REQUIREMENTS

- Compost Mulch for Bioretention must meet the **Specification 1** compost requirements of Section 11-C.1.A, except that the gradation must be **Coarse Compost** per Section 11-C.1.C
- Compost Mulch for other facilities and BMPs must meet either **Specification 1 or Specification 2** compost of Section 11-C.1.A or 11-C.1.B respectively, except that the gradation must be **Coarse Compost** per Section 11-C.1.C.

(This page intentionally left blank)

KING COUNTY, WASHINGTON

SURFACE WATER DESIGN MANUAL

REFERENCE 11-E

ROOFING ERODIBLE OR LEACHABLE MATERIALS

(This page intentionally left blank)

REFERENCE 11-E

ROOFING ERODIBLE OR LEACHABLE MATERIALS

Metal roofing coating: Inert, non-leachable material

Metal roofs are considered to be pollution generating impervious surface unless they are coated with PVDF (Polyvinylidene Fluoride) with a manufacturer's 25-year or better guarantee of no metals leaching, and are not subject to venting significant amounts of dusts, mists, or fumes from manufacturing, commercial, or other indoor activities.

Non-metal roofing types that may pose risk but are not currently regulated

The following roof types are currently not regulated as pollution generating surfaces, but there is some evidence that they may pose risks to water quality. This information is provided to assist the public in making more informed choices.

These roof types include any roofing manufactured or treated with biocides for moss, algae, rot, or plant control; i.e. those containing any heavy metal such as copper, lead, zinc, silver, or arsenic, or organic biocides such as (R,S)-mecoprop bi-ester[1] and terbutryn, carbendazim, and Irgarol 1051[2].

Other roof types that may pose risk include synthetic roofing materials that use zinc or any other leachable heavy metal as a manufacturing catalyst or for any other purpose, any roofing material containing any heavy metal as a UV stabilizer or for pigmentation[3]. Phthalates have also been noted as leaching from some synthetic roofing.

❑ SPECIFIC EXAMPLES OF NON-METAL AND COATED METAL ROOFS FOR WHICH THERE IS DOCUMENTED EVIDENCE' OF SOME RUNOFF RISK

Roofs with potential risk based on regional monitoring of regionally supplied materials[4,5]

- Asphalt shingles with algae resistance (AR)
- EPDM (ethylene propylene diene monomer)
- Manufacturer-painted galvanized steel, painted with silicone-modified polyester paint[6, 4]
- PVC (polyvinyl chloride)
- Treated wood shakes

[1] Bucheli, Thomas D., Stephan R. Müller, Andreas Voegelin, and René P. Schwarzenbach. 1998. Bituminous Roof Sealing Membranes as Major Sources of the Herbicide (R,S)-Mecoprop in Roof Runoff Waters: Potential Contamination of Groundwater and Surface Waters. Environmental Science & Technology 32 (22):3465-3471.

[2] Background literature review in support of the regional study by Ecology. Winters, Nancy. 2013. Quality Assurance Project Plan. Roofing Materials Assessment: Investigation of Toxic Chemicals in Roof Runoff. Publication No. 13-03-105. Lacey, WA: Washington State Department of Ecology.

[3] Polybrominated diphenyl ethers (PBDE) or other fire retardants may be an issue in Central and Eastern Washington, but according to manufacturers on Ecology's Roofing Task Force, these are not applied in Western Washington.

[4] Materials provided by Western Washington manufacturers and/or vendors. First year of study. Winters, Nancy, and Kyle Graunke. 2014. Roofing Materials Assessment - Investigation of Toxic Chemicals in Roof Runoff. Lacey, WA. https://fortress.wa.gov/ecy/publications/SummaryPages/1403003.html

[5] Materials provided by Western Washington manufacturers and/or vendors. Winters, Nancy, Melissa McCall, and Allison Kingfisher. 2014. Roofing Materials Assessment - Investigation of Toxic Chemicals in Roof Runoff from Constructed Panels in 2013 and 2014. Publication No. 14-03-033. Lacey, WA.

Roofs with potential risk based on other Studies[6]

- Asphalt shingles
- Asphalt fiberglass shingles
- Asphalt (residential)
- Asphalt impregnated with copper
- Asphalt roofs with moss-control zinc strips
- Bituminous roof sealing membrane for green roof, treated to inhibit root penetration
- Built-up commercial
- Built-up with coal tar
- Cedar shakes
- Ceramic tile
- Clay tile
- Concrete tile
- Ethylene propylene diene monomer (EPDM or rubber roofing)
- Galfan (aluminum-coated)
- Gravel
- Impregnated wood
- Ondura
- Painted steel
- Pressure treated / water sealed wood
- Polyester
- Polyvinyl Chloride (PVC)
- Synthetic roofing materials, e.g. thermoplastic olefin (TPO)
- Rubber
- Treated roofing materials (non-specific as cited)
- Vegetated roof
- Wood shingle

[6] Background literature review in support of the regional study by Ecology. Winters, Nancy. 2013. Quality Assurance Project Plan. Roofing Materials Assessment: Investigation of Toxic Chemicals in Roof Runoff. Publication No. 13-03-105. Lacey, WA: Washington State Department of Ecology.

KING COUNTY, WASHINGTON
SURFACE WATER DESIGN MANUAL

REFERENCE 14

SUPPLEMENTAL APPROVED FACILITIES

14-A King County Approved Proprietary Facilities

14-B King County Approved Public Domain Facilities

KING COUNTY, WASHINGTON
SURFACE WATER DESIGN MANUAL

REFERENCE 14-A

KING COUNTY APPROVED PROPRIETARY FACILITIES

(This page intentionally left blank)

REFERENCE 14-A

KING COUNTY APPROVED PROPRIETARY FACILITIES

1. STORMFILTER

The Stormwater Management StormFilter® (StormFilter) is a flow-through stormwater filtration system comprised of a vault that houses media-filled cartridges. As stormwater fills the treatment chamber, stormwater filters through the media to the center of the cartridge, and treated stormwater is collected and discharged through underdrain collection pipes. Figure 14-A.1.A shows a schematic representation of a StormFilter.

Applications and Limitations

A StormFilter with ZPG™ (zeolite/perlite/granulated activated carbon) media may be used as a single facility (with pretreatment) to meet the Basic treatment requirement. In addition, the StormFilter with ZPG may be used as the first (Basic) facility in a treatment train to meet Enhanced Basic, Sensitive Lake Protection, or as the first or second facility in a treatment train to meet Sphagnum Bog Protection. Use of the StormFilter with ZPG as the first facility in a treatment train will require pretreatment.

A StormFilter with CSF™ (leaf compost) media is not approved by Ecology and therefore may not be used as a second water quality facility in an Enhanced Basic treatment train. However, A StormFilter with CSF™ media may be used in a treatment train for sphagnum bog protection, or to mitigate a downstream high pH problem[1].

The StormFilter is capable of being filled with several types of filter media. Until additional performance data is collected for additional types, **only the ZPG media is acceptable to meet Basic water quality requirements, and CSF is only acceptable as part of a treatment train for Sphagnum Bog Protection**. Other types of media may be allowed with an Experimental Design Adjustment after the media has been approved through the Washington State Department of Ecology's TAPE[2] program (see SWDM Section 1.4.2 and Reference 8-F). An adjustment without presettling may be considered on an experimental basis for drainage basins less than ½ acre of impervious area. The StormFilter with ZPG media does not meet the Lake Protection Standard as a stand-alone facility.

Consult the water quality menus in SWDM Section 6.1 for specific information on how a StormFilter may be used to meet Core Requirement # 8.

A. METHODS OF ANALYSIS

StormFilter sizing is based on the water quality design flow and a mass loading method. Since the process and the compost are patented, CONTECH Engineered Solutions (CES; or their successor) personnel will configure a StormFilter based on the design flow provided and specific ***site*** characteristics. The WQ design flow should be based on the modeled flows, described in Chapter 6 and determined using the guidance per the approved model's user reference, rather than on other flow-estimation methods. An accurate description of land use and potential sediment and pollutant loading sources shall also be provided to CES personnel, who will consider these factors in sizing. The specific sizing methodologies are described below.

[1] See SWDM Sections 1.2.2.1: Downstream Analysis, High pH Problem (Type 7), and 1.2.2.2: Drainage Problem Impact Mitigation
[2] Technology Assessment Protocol - Ecology

❑ STORMFILTER WITH ZPG MEDIA FOR BASIC WATER QUALITY TREATMENT

1. The maximum flow rate (gpm/cartridge) is based on the effective cartridge height. The **maximum flow rate per cartridge** shall be per Table14-A.1.A (below). The maximum specific flow rate is 1 gpm/ft^2 of media surface area.
2. The **water quality design flow** shall be as follows, whichever is applicable:
   - **Preceding detention (or no detention):** the ***on-line*** or ***off-line*** (as applicable) WQ flow rate, as determined using the Approved Model with 15-minute time steps calibrated to ***site*** conditions.[3] *The flow rate reported by the model is to be used directly for this application and is **not** to be modified per SWDM Section 6.2.1*
   - **Downstream of flow control:** The full 2-year release rate from the detention facility.
3. The StormFilter shall be **sized using both the flow-based and mass-based methods** as described in the *Product Design Manual Version 4.1 (April 2006)*, or the most current version, and the designer shall select the result yielding the larger number of cartridges.
4. **Presettling** shall be provided per SWDM Section 6.5.1, "General Requirements for Filtration Facilities".
5. StormFilter systems shall be installed in such a manner that the **flows exceeding the design flow rates** are bypassed or will not suspend captured sediments.
6. **ZPG media shall conform to the following specifications**. Verification that these specifications are met shall be required.
   a) Each cartridge contains a total of approximately 2.6 cubic feet of media. The **ZPG cartridge** consists of an outer layer of perlite that is approximately 1.3 cubic feet in volume and an inner layer, consisting of a mixture of 90% zeolite and 10% granular activated carbon, which is approximately 1.3 cubic feet in volume.
   b) **Zeolite Media:** Zeolite media shall be made of naturally occurring clinoptilolite. The zeolite media shall have a bulk density ranging from 44 to 50 lbs per cubic foot and particle sizes ranging from 0.13" (#6 mesh) to 0.19" (#4 mesh). Additionally, the cation exchange capacity (CEC) of zeolite shall range from approximately 1.0 to 2.2 meq/g.
   c) **Perlite Media:** Perlite media shall be made of natural siliceous volcanic rock free of any debris or foreign matter, The expanded perlite shall have a bulk density ranging from 6.5 to 8.5 lbs per cubic foot and particle size ranging from 0.09" (#8 mesh) to 0.38" (3/8" mesh).
   d) **Granular Activated Carbon:** Granular activated carbon (GAC) shall be made of lignite coal that has been steam-activated. The GAC media shall have a bulk density ranging from 28 to 31 lbs per cubic foot and particle sizes ranging from a 0.09" (#8 mesh) to 0.19" (#4 mesh).

TABLE14-A.1.A MAXIMUM STORMFILTER DESIGN FLOW RATES PER CARTRIDGE FOR BASIC TREATMENT WITH ZPG MEDIA

Effective Cartridge Height (inches)	12	18	27
Cartridge Flow Rate (gpm/cartridge)	5	7.5	11.25

[3] The StormFilter with ZPG has general use level designation (GULD) approval for Basic treatment (80% TSS removal) through WA Ecology's TAPE (Technology Assessment Protocol – Ecology), based on water quality design flow specified in the GULD approval document. http://www.ecy.wa.gov/programs/wq/stormwater/newtech/use_designations/STORMFILTERzpg1GPMCONTECHguld.pdf

❑ STORMFILTER WITH CSF LEAF MEDIA FOR SPAGNUM BOG PROTECTION TREATMENT.

1. The **water quality design flow** shall be as follows, whichever is applicable:
   - **Preceding detention (or no detention):** the ***on-line*** or ***off-line*** (as applicable) WQ flow rate, as determined using the Approved Model with 15-minute time steps calibrated to ***site*** conditions. *The flow rate reported by the model is to be used directly for this application and is **not** to be modified per SWDM Section 6.2.1*
   - **Downstream of flow control:** The full 2-year release rate from the detention facility.
2. The **maximum specific flow rate** shall be 2 gpm/ft^2 of media surface area.
3. The StormFilter shall be **sized using both the flow-based and mass-based methods** as described in the *Product Design Manual Version 4.1 (April 2006)*, or the most current version, and the designer shall select the result yielding the larger number of cartridges.

TABLE 14-A.1.B MAXIMUM STORMFILTER DESIGN FLOW RATES PER CARTRIDGE FOR SPHAGNUM BOG PROTECTION WITH CSF MEDIA			
Effective Cartridge Height (inches)	12	18	27
Cartridge Flow Rate (gpm/cartridge)	10	15	22.5

B. DESIGN CRITERIA

Figure 14-A.1.A (p. Ref 14A-5) illustrates the general configuration of a typical StormFilter unit using standard precast concrete vaults.

General

1. Vaults used for a StormFilter shall conform to the **"Materials"** and **"Structural Stability"** requirements specified for detention vaults (see SWDM Section 5.1.3).
2. Several vault sizes are available for the StormFilter. The details of cartridge configuration and maximum number of cartridges allowed in each size vault are available in Reference Section 7C, StormFilter Access and Cartridge Configuration.

Presettling

Presettling is required as described in SWDM Section 6.5.1, “General Requirements for Filtration Facilities”.

Access Requirements

1. **Access must be provided** by either removable panels or other King County approved accesses to allow for removal and replacement of the filter cartridges. Approved access details are available in Reference Section 7C, StormFilter Access and Cartridge Configuration. Removable panels, if used, shall be at grade, have stainless steel lifting eyes, and weight no more than 5 tons per panel.
2. Access to the **inflow and outlet cells** must also be provided.
3. **Ladder access** is required. A minimum 2-foot diameter lateral clear access shall be provided between the entry ladder and any other obstacle, e.g. the nearest cartridge extremity.
4. **Locking lids** shall be provided as specified for detention (see SWDM Section 5.1.3).

5. If removable panels or the Reference Section 7C access configurations are not used, corner **ventilation pipes** shall be provided, and the **minimum internal height and width** and **maximum depth** shall be met (see SWDM Section 5.1.3).

Access Roads, Right of Way, and Setbacks

Same as for detention vaults (see SWDM Section 5.1.3).

Construction Considerations

Installation of a StormFilter cartridge filter facility shall follow the manufacturer's recommended procedures.

Maintenance Requirements

Maintenance needs vary from ***site*** to ***site*** based on the type of land use activity, implementation of source controls, and weather conditions. The StormFilter shall be inspected quarterly or at a frequency recommended by the supplier. Inspection and maintenance shall include the following:

1. The operation and maintenance instructions from the manufacturer shall be kept along with an inspection and maintenance log. The **maintenance log** shall be available for review by County inspectors.
2. **Routine maintenance** shall include inspecting for debris, vegetation, and sediment accumulation, flushing the underdrain, and removing or replacing media.
3. **Maintenance is required when** $^1/_4$ inch of sediment has accumulated on top of the cartridge hood, or 2 inches of sediment have accumulated on the floor. If the cartridges are in standing water more than 12 hours after rainfall has occurred, maintenance is required. The inspector should make sure that the cartridges are not submerged due to backwater conditions caused by high groundwater, plugged pipes, or high hydraulic grade lines, according to the manufacturer's recommendations.
4. **CSF (leaf compost) media** used for Enhanced Basic or Sphagnum Bog Protection treatment should be replaced according to the sediment recommendations above or at a minimum of every two years.
5. Media shall be disposed of in accordance with applicable regulations, including the Seattle-King County Department of Public Health solid waste regulations (Title 10) and state dangerous waste regulations (WAC 173-303). In most cases, the media may be disposed of as solid waste.

FIGURE 14-A.1.A STORMFILTER SCHEMATIC

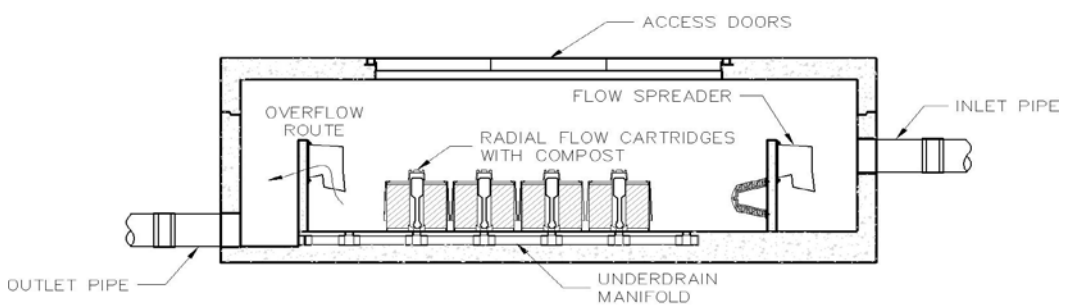

KING COUNTY, WASHINGTON
SURFACE WATER DESIGN MANUAL

REFERENCE 14-B

KING COUNTY APPROVED PUBLIC DOMAIN FACILITIES

None at this time

(This page intentionally left blank)