STORMWATER POLLUTION PREVENTION MANUAL

Best Management Practices for Commercial, Multi–Family and Residential Properties

April 2016

Prepared by

King County
Department of Natural Resources and Parks
Water and Land Resources Division
Stormwater Services Section

Foreword

The King County Stormwater Pollution Prevention Manual was developed to comply with requirements of the Federal Clean Water Act–National Pollutant Discharge Elimination System (NPDES) Program and the State Puget Sound Water Quality Management Plan–Stormwater Program. The intent of these programs is to maintain and improve the quality and beneficial uses of our water resources. The widespread implementation of best management practices (BMPs) is regarded as one of the best solutions to achieving this goal. This manual provides detailed information for businesses, residents, managers, and owners of property in unincorporated King County, and describes the actions we are all required to take to reduce the contamination of stormwater, surface water, and groundwater.

Note: This manual replaces the King County Stormwater Pollution Prevention Manual, Best Management Practices for Businesses, dated January 2009.

Acknowledgments

Primary Contributing Staff:

Cynthia Hickey, Senior Engineer
Blair Scott, Project Manager

Clarification of Manuals

The Stormwater Pollutant Prevention Manual (SPPM) presents pollution prevention practices for all property owners in unincorporated King County. Use the King County Surface Water Design Manual (KCSWDM) for construction projects that require King County permits and have stormwater quantity and quality control requirements. Redevelopment or property improvements on existing sites may require structural BMPs. Structural BMPs are found in this manual as well as the KCSWDM.

Design/Layout:

KCIT GIS, Visual Communications and Web Unit

File:

1606_6646L_SPPMmanual.indd

KING COUNTY STORMWATER POLLUTION PREVENTION MANUAL

Table of Contents

CHAPTER 1 – OVERVIEW 7

About this Manual 7

Best Management Practices 7

Exemptions 8

Step by Step Approach 8

Activities that May Result in Structural Improvements 10

Other Agency Requirements 12

Your Storm Drainage System 13

Activities That May Affect Stormwater Runoff (Table) 18

CHAPTER 2 – STORMWATER PROBLEMS 15

Stormwater Runoff 15

Storm Drains Lead to Lakes and Streams 15

Polluting is Against the Law 15

Ways You May be Polluting 15

Pollutants 16

CHAPTER 3 – STORMWATER BEST MANAGEMENT PRACTICES FOR COMMERICAL ACTIVITIES 21

Pollution Prevention Practices 23

BMP Activity Worksheet 24

BMP Activity Sheets

A-1 Required Best Management Practices for all Properties with Commercial Activities 27

A-2 Outdoor Storage of Liquid Materials in Stationary Tanks 29

A-3 Storage of Liquid Materials in Portable Containers 30

A-4 Outdoor Storage of Soil, Sand, and Other Erodible Materials 31

A-5 Storage of Dry Pesticides and Fertilizers 32

A-6 Storage of Contaminated Soils 33

A-7 Outdoor Storage and Processing of Food Items 34

A-8 Storage or Solid and Food Wastes (Including Cooking Grease) 35

A-9 Storage of Scrap and Recycling Materials (Including Auto Recycling Facilities) 36

A-10 Treatment, Storage, or Disposal of Dangerous Wastes 37

A-11 Cleaning or Washing of Tools and Equipment 38

A-12 Cleaning or Washing of Food Service Areas and Equipment 39

A-13 Vehicle Washing and Steam Cleaning 40

A-14 Interior Washing Operations 41

A-15 Pressure Washing of Buildings, Rooftops, and Other Large Objects 42
A-16 Truck or Rail Loading and Unloading of Liquid or Solid Material 43
A-17 Stationary Fueling Operations 44
A-18 Vehicle and Equipment Repair and Maintenance 47
A-19 Concrete, Asphalt Production, and Recycling 49
A-20 Concrete and Asphalt Application 50
A-21 Manufacturing and Post–Processing of Metal Products 51
A-22 Painting, Finishing, and Coating of Vehicles, Products and Equipment 52
A-23 Wood Treatment and Preserving 53
A-24 Commercial Composting 54
A-25 Chemical Applications – Other Than Landscaping 55
A-26 Landscaping Activities and Vegetation Management 56
A-27 Clearing and Grading of Land for Small Construction Projects 58
A-28 Demolition of Buildings 59
A-29 Building Repair, Remodeling, and Construction 60
A-30 Ship/Boat/Watercraft Building, Maintenance, and Repair 62
A-31 Vehicle and Equipment Parking and Storage 63
A-32 Sidewalk Maintenance 64
A-33 Swimming Pool and Spa Cleaning and Maintenance 65
A-34 Keeping Animals in Controlled Areas 67
A-35 Keeping Livestock in Stables, Pens, Pastures, or Fields 68
A-36 Logging and Log Yards 69
A-37 Mining and Quarrying of Sand, Gravel, and Other Materials 70
A-38 Well, Utility, Directional and Geotechnical Drilling 71
A-39 Roof Vents and Fugitive Emissions 72
A-40 Street Deicing Operations 73
A-41 Wheel Wash and Tire Bath Track Out Control 74
A-42 Potable Water Line Flushing, Water Tank Maintenance and Hydrant Testing 75
A-44 Dust Control for Commercial Operations 76
A-45 Maintenance of Public and Private Utility Corridors and Facilities 77
A-46 Color Events 78
A-47 Older Fueling Operations 80
A-48 Mobile Fueling of Vehicles and Heavy Equipment 82

CHAPTER 4 – RESIDENTIAL BMPs 85
Introduction 85
Residential BMP Sheets
R–1 Residential Automobile and Boat Washing 86
R–2 Storage of Solid and Food Wastes AKA Garbage 87
R–3 Residential Automobile Repair and Maintenance 88
R–4 Residential Hazardous Waste Use, Storage, and Disposal 89
R–5 Residential Gardening and Lawn Care 90
R–6 Residential Maintenance and Repair 91
R–7 Residential Swimming Pool and Hot Tub Maintenance 93

CHAPTER 5 – INFORMATION SHEETS 95
Catch Basin Inserts 96
Containment 99
Controlling and Collecting Contaminated Runoff 101
Covering 103
Disposal 105
Drainage Maintenance Contractors 108
Oil/Water Separator 112
Spill Response and Cleanup Plan 114
Water Quality Treatment BMPs 120

CHAPTER 6 – TECHNICAL ASSISTANCE 123
General BMP Selection 123
Sanitary Sewer and Septic Systems Resources 124
Waste Management and Recycling 124
Land Use, Fire Code, and Building Code Requirements 127
Erosion Control Practices 127
Air Quality 128
Environmental Organizations 129

QUICK PHONE REFERENCE 130

CHAPTER 1

OVERVIEW

ABOUT THIS MANUAL

King County's water resources – its streams, lakes, wetlands, groundwater, and Puget Sound – play an important role in the quality of life we enjoy. They provide us with recreation and drinking water, support tourism, salmon and multiple other fish species, and are used extensively in industry. These waters, however, are vulnerable to pollution from a wide variety of human activities.

Many of our water pollution problems are due in large part to pollutants washed off of land by storms. The quality of "stormwater" from residential properties, public facilities, commercial and industrial businesses, and agricultural lands is an increasing concern nationwide. The amount of pollution from any one place may not be significant by itself, but cumulative effects to water quality can be significant.

The federal Clean Water Act mandates that cities and counties control the quality of stormwater runoff through implementation of pollution prevention measures. To meet the requirements of the Clean Water Act and to sustain our quality of life, the King County Council passed King County Code 9.12 (Water Quality) in November 1992.

This manual applies to all activities in unincorporated King County that have the potential to contribute pollutants to stormwater runoff or to receiving waters directly. Stormwater runoff may seep into the ground, drain to a storm drain or a drainage ditch, or flow over the ground. Regardless of the way runoff leaves the site, it can end up in a stream, river, lake, wetland, groundwater, or Puget Sound.

King County Code 9.12 (water quality) requires the use of BMPs described in this manual. The manual includes:

- Stormwater BMPS for commercial, industrial, public, and multifamily residential activities.
- Stormwater BMPs for single family residential properties.
- Information on how to implement many stormwater BMPs.
- Additional resources

BEST MANAGEMENT PRACTICES

The methods of protecting the quality of stormwater, surface water and groundwater, are called best management practices (BMPs). BMPs encompass a variety of managerial, operational, and structural measures that will reduce the amount of contaminants in stormwater and improve the quality of our water resources.

BMPs are separated into two broad categories: source control and treatment. Source control BMPs prevent contaminants from entering water bodies or stormwater runoff. Some source control BMPs are operational, such as checking regularly for leaks and drips from equipment or vehicles, covering materials that have the potential to add pollutants to surface water, and educating employees about site clean–up procedures. Other source control BMPs are structural, including roofs, berms, and fueling pads.

Treatment BMPs are activities that treat stormwater to remove pollutants although no treatment BMP can remove 100 percent of the contaminants.

It is more efficient, effective, and economical to prevent the contamination of stormwater than to treat it.

EXEMPTIONS

You are exempt from implementing the BMPs in this manual if you:

- Have obtained and are complying with a permit under the National Pollutant Discharge Elimination System (NPDES) Stormwater Permit Program.
- Implement and maintain a farm management plan approved by the King Conservation District (KCD).
- Implement BMPs in compliance with King County Code 21A.30, which addresses animal and livestock keeping practices.
- Engage in forest practices, with the exception of Class IV general forest practices.

These exemptions are only from the requirements of this manual. If you are exempted for one or more of the reasons listed above, King County assumes that you are implementing the appropriate BMPs. If you have not implemented BMPs, or they are not effectively addressing the discharge of contaminants, then you will be required to comply with this manual. The following is a step–by–step approach to BMP compliance.

STEP BY STEP APPROACH

1 Determine Your Status

If you are not exempt due to an above listed reason, then you must comply with the BMPs in this manual.

2 Evaluate Existing Conditions

Determine which activities in this manual are applicable to your property using the BMP Activity Worksheet.

Review the applicable BMP activity sheets which can be found in Chapter 3 of this manual and on our Web site at *http://www.kingcounty.gov/environment/waterandland/stormwater/documents/pollution–prevention–manual.aspx*.

You will need to be familiar with the stormwater drainage system on your site.

3 Seek Assistance

You can have a free on–site consultation with a WLRD engineer who will walk through your site, discuss conditions, necessary BMPs, and provide assistance with implementation. To request an on–site consultation, call 206–477–4811.

4 Check Your Internal Floor Drains and Plumbing System Connections

Discharges from internal floor drains, appliances, industrial processes, sinks, and toilets that are connected to the nearby storm drainage system can cause significant stormwater pollution. These discharges must go to the sanitary sewer system, a holding tank, an on–site process water treatment system, or a septic system under certain conditions.

For information on how to check for illicit connections refer to BMP Activity Sheet A-1. You can also get help from your local sewer utility. If you find out that your internal drains are improperly connected to the storm drainage system, they will need to be removed, permanently plugged, or connected to the sanitary sewer, septic system, on–site treatment system under certain conditions, or a holding tank.

Note: Only residential strength wastewater (or domestic wastewater) from sinks, toilets, washing machines, dishwashers, bathtubs, and showers can legally be discharged to a septic system. Non–domestic wastewater (or commercial, industrial, or non–residential wastewater) should never enter the septic system; it cannot be treated. Non–domestic wastewater may also kill beneficial microorganisms that treat sewage, and can contaminate soil and groundwater. Only put things down the drain that the septic system is designed to handle: organic waste and septic system friendly paper products. Floor drains directly connected to septic systems may pose health and fire hazards due to septic gases.

5 Develop an Implementation Strategy

Look at the property as a whole to determine how the BMPs you implement will work together. There may be acceptable BMPs that are not listed in the manual. Be creative in assessing your own needs and the constraints that you may face on your property.

6 Implement the Nonstructural Source Control BMPs

First, implement the BMPs that do not require extensive construction. Examples include having spill control and cleanup materials on site, using drip pans or drop cloths when conducting day to day activities, and sweeping instead of hosing down an area to a storm drain.

7 Implement the Structural Source Control BMPs if necessary.

Second, implement the structural source control BMPs that may require a building permit or require larger capital expenditures. Examples include constructing a building to enclose a work activity that is currently in the open, or building a containment area.

8 Implement a Treatment BMP

If a treatment BMP is determined to be necessary for your site, you must have an acceptable design prepared and approved by WLRD. You may be required to use the King County Surface Water Design Manual (KCSWDM) when designing and receiving approval of treatment BMPs. Once the design has been approved by WLRD and a permit issued (if necessary) from the Department of Permitting and Environmental Services (DPER), construction may begin.

9 Keep Records

Keep copies of the activity sheets and other documentation on implementing BMPs. Records may be used to illustrate compliance with this manual.

10 Maintain Your BMPs

Business owners and property managers must ensure employees are maintaining all BMPs. Employee education should be a continuous process for effective BMP implementation. Single family residential properties are also required to maintain all BMPS.

ACTIVITIES THAT MAY RESULT IN STRUCTURAL IMPROVEMENTS

There are a number of activities that may require structures and/or specific drainage configurations in order to protect stormwater and maintain compliance with King County Water Quality Code 9.12. Roof structures, wheel washes, cement pads, shutoff valves, containment berms and indoor mop sinks are all examples of things that need to be in place prior to commencing the activity. These may require building permits and other approvals prior to construction. Contact DPER for permit information.

Below are some highlighted activities and the BMP activity sheets that provide more detail:

Commercial Composting

Structural improvements: paved composting and storage pads, leachate collection system, lined collection ponds, wheel wash system

- A-24 Commercial Composting

Fueling of equipment and vehicles

Structural improvements: Portland cement pads, roofs, spill control devices, trench drains, oil/water separators

- A-17 Fueling Operations
- A-47 Older Fueling Operations

Horse stables

Structural improvements: Wash racks connected to sanitary sewer or separate infiltration area, manure containment areas

- A- 35 Livestock

Mining of sand or gravel

Structural improvements: Wheel wash system and track–out control, catch basin inserts

- A-41 Wheel Wash System

Painting, Finishing, & Coating of Vehicles & Equipment

Structural improvements: Permitted, enclosed paint booths

- A-22 Painting, Finishing, & Coating of Vehicles, Products, & Equipment

Restaurants and food trucks

Structural improvements: Indoor sinks for mat and rack washing and mop and wastewater disposal.

- A-8 Storage of Solid and Food Wastes
- A-12 Cleaning of Food Service Areas and Equipment

Outdoor storage of erodible materials, e.g. compost, bark, sand, etc.

Structural improvements: Wheel wash system and track–out control, berms, containment areas, covering, and catch basin inserts

- A-41 Wheel Wash and Tire Bath Track Out Control

Outdoor storage or processing of galvanized materials

Structural improvements: Roofs or other covering, stormwater collection and treatment system

- A-21 Manufacturing and Post–Processing of Metal Products

Storage of liquid materials

Structural improvements: Secondary containment, roofed structures, spill control devices

- A-2 Storage of Liquid Materials in Stationary Tanks
- A-3 Storage of Any Liquid Materials in Portable Containers

Utility Corridor Maintenance

Structural improvements: Road stabilization

- A-45 Maintenance of Public & Private Utility Corridors & Facilities

Washing of cars, trucks and equipment (not just commercial car washes)

Structural improvements: Dedicated wash pads, sewer connection, holding tanks, catch basin inserts

- A-13 Vehicle washing

Wood Treatment & Preserving

Structural improvements: Paved, contained and covered storage and processing areas

- A-23 Wood Treatment & Preserving

OTHER AGENCY REQUIREMENTS

Please note that other federal, state, and local agencies enforce regulations that may relate to your implementation of Best Management Practices. Consult the following entities for guidance on the listed activities:

King County Surface Water Design Manual

- Drainage requirements, and construction BMPs for erosion and sediment control for new development and redevelopment

King County Critical Areas and Clearing and Grading Ordinances

- Land use regulations protecting environmentally sensitive areas and public health and safety

King County Fire Code

- Storage and handling of flammable, combustible, and hazardous materials

King County Animal Regulations (Livestock Ordinance)

- Raising and keeping of livestock

Public Health – Seattle & King County

- Solid waste
- Septic systems (On–Site Septic Systems)
- Structural pesticide applicators

King County Wastewater Treatment Division Industrial Waste Section and Local Sewer Authorities

- Acceptance of process water or contaminated stormwater to sanitary sewers

Washington State Department of Ecology

- National Pollutant Discharge Elimination System (NPDES) Stormwater Permits
- Discharge of process wastewater to surface water
- Underground storage tanks
- Spill prevention and control plans
- Dangerous waste generators
- Groundwater quality protection
- Oil spill prevention and cleanup plans (with U.S. EPA)

Washington State Department of Agriculture

- Pesticide applications

Puget Sound Clean Air Agency

- Fugitive dust
- Outside painting
- Spray booths

U.S. Coast Guard

- Transfer of petroleum products on Puget Sound

YOUR STORM DRAINAGE SYSTEM

Instructions

If you have a set of plans/blueprints of your site and the associated storm drainage system, familiarize yourself and your employees with drainage patterns and drainage structure location. If you do NOT have a set of plans for the property, prepare a rough sketch to familiarize you with your on–site drainage system and aid in the implementation of best management practices. The sketch should show the following:

- Drainage structures, i.e., catch basins, pipes, ditches, ponds, vaults, etc.
- Buildings
- Storage structures/sheds
- Storage areas
- Places/points where stormwater leaves your site

A rough sketch will familiarize you with your on–site drainage system and aid in the implementation of best management practices. If you have any questions call 206–477–4811.

Example

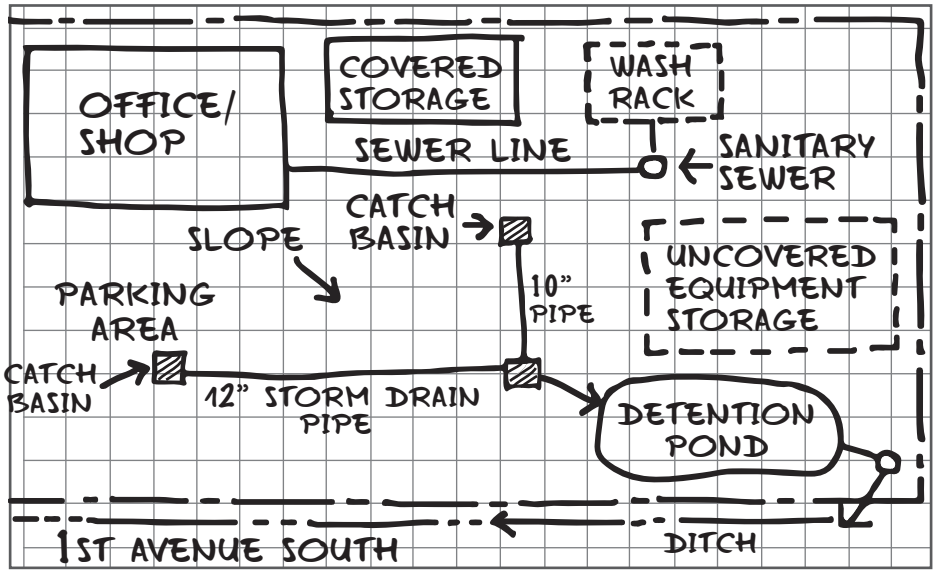

2 STORMWATER PROBLEMS

STORMWATER RUNOFF

In vegetated areas such as forests, fields, and wetlands, rainwater seeps slowly into the ground. However, when rain falls on paved and other hard, impervious surfaces it runs off quickly and is conveyed by pipes and ditches directly to King County lakes, wetlands, and streams. This water that flows across the land is called stormwater runoff. Stormwater runoff collects pollutants when it hits the ground and carries it to the storm drain system and ultimately to Puget Sound. For example, runoff from parking lots picks up oil and grease dripped from cars, asbestos from worn brake linings, and zinc from tires. Pesticides, herbicides, and fertilizers are washed off from landscaped areas, and soils are washed away from construction sites. Any substance found on the ground can contaminate stormwater runoff.

STORM DRAINS LEAD TO LAKES AND STREAMS

Storm drainage systems are designed to decrease the chance of flooding in developed areas. The storm drainage system collects stormwater runoff from catch basins, roof downspouts, footing drains, and other inlets. The stormwater is then conveyed to the nearest wetland, lake, stream, or to Puget Sound. In urban areas, the storm drainage system consists primarily of drains and underground pipes. In rural areas, the storm drainage system may be in the form of ditches. Drainage systems are meant to carry only unpolluted stormwater to the nearest natural body of water.

In areas that are served by sanitary sewer all interior drains including toilets, all interior floor drains, process water, etc., lead to the sanitary sewer system and end up at a wastewater treatment plant where the wastewater is treated before being discharged into Puget Sound. In areas that do not have sanitary sewer the interior drains go to an onsite sewage treatment system, known as an On–Site Septic System. The wastewater is treated naturally and infiltrated on site.

POLLUTING IS AGAINST THE LAW

The Washington State Water Pollution Control Law (RCW 90.48) and the King County Water Quality Code (KCC 9.12) prohibit the discharge of pollutants to the storm drainage system, surface water, and groundwater. Pollution can cause harmful algal blooms and impair recreational activities; lesions and tumors in fish and other animals; destruction of fish spawning areas and damage habitat for plants and animals.

WAYS YOU MAY BE POLLUTING

Many people know that it is illegal to dump toxic chemicals or other material directly down a storm drain but some of the more common pollution generating activities include:

- Washing tools and equipment outside
- Hosing down your work area, driveway, or sidewalk
- Blowing leaf litter and sediment into the street
- Spilling oil or grease on pavement without cleaning it up

- Not repairing leaking vehicles
- Digging without taking steps to prevent erosion
- Washing vehicles even with "environmentally safe" or "green" cleaners.

POLLUTANTS

Any substance that can render water harmful to people, fish, or wildlife or impair recreation or other beneficial uses of water is considered a pollutant. The broad categories of pollutants and their effects on fish and wildlife are described below.

The table located at the end of this chapter presents a list of the activities addressed in this manual. This table indicates the types of pollutants that may be generated by those activities.

Oils, Greases, and Fuels

Oils and greases have many common sources: driveways, streets, highways, parking lots, food waste storage areas, heavy equipment and machinery storage areas, and places where pesticides have been applied. The familiar sight of a rainbow–colored puddle or trickling stream of water in parking lots, driveways, and street gutters is a reminder of the presence of oils and greases in stormwater runoff. Oils and greases can be petroleum–based (motor oil) or food–related (cooking oils). Oil and grease are known to be toxic to aquatic organisms even at relatively low concentrations. They can coat fish gills, prevent oxygen from entering the water, and clog drainage facilities.

Metals

Many metals, including lead, copper, zinc and cadmium, are commonly found in urban runoff. Metals can contaminate surface and groundwater, and concentrate in bottom sediments, presenting health problems for fish and animals that eat from the bottom of lakes, streams, and Puget Sound. This in turn harms the people who consume the fish caught in contaminated areas. Industrial areas, scrap yards, paints, pesticides, and fallout from automobile emissions are typical sources of metals in runoff.

Sediments

Sediment, often originating as soil particles, sand, and clay, is the most common pollutant in stormwater runoff by volume and weight. Excess sediment turns stream and lake water cloudy, making them less suitable for recreation, fish life, and plant growth. Sediment is of particular concern in fish–bearing streams where it can smother fish eggs, destroy habitat for insects (a food source for fish), and cover prime spawning areas. Sediment can also clog storm drains, leading to increased private and public maintenance costs and flooding problems.

Sediment is also of concern because many other pollutants including PCBs, oils, metals, bacteria, and nutrients tend to attach to soil particles. Construction sites and exposed earth are generally the greatest contributors of sediment in surface waters. Other sources include erosion from agricultural lands, pressure washing and sandblasting operations, loose dirt and debris tracked out to roads by equipment and vehicles, and dirt and grit from parking lots, driveways, and sidewalks.

Oxygen–Demanding Substances

Plant debris, yard waste, food waste, compost, sawdust, and some chemical wastes fall into a category of water pollutants known as oxygen–demanding substances. Such substances use dissolved oxygen in water when they decay or chemically react. If dissolved oxygen levels in water become too low, aquatic animals become stressed or die. Salmon and trout are particularly at risk because they need high dissolved oxygen levels to live.

Animal wastes, food wastes, yard waste, and other miscellaneous organic matter carried by stormwater runoff into surface water can lead to reduced oxygen levels. Slow–moving waters are particularly susceptible to oxygen depletion because there is little aeration of the water by turbulence. Therefore, oxygen that is depleted in slow–moving waters is not replaced.

Nutrients

Plants need nutrients such as phosphorus and nitrogen to grow, but high levels can be harmful to water quality. Excess nutrient levels can over–stimulate the growth of algae and other aquatic plants, resulting in unpleasant odors, unsightly surface scum, and lowered dissolved oxygen levels from plant decay. Nutrients are most likely to pose a problem in slow moving water such as lakes or sluggish streams.

Some forms of algae are toxic to fish and other aquatic organisms and may even cause death in animals that drink affected water. Algae can also cause taste and odor problems in drinking water, foul–smelling odor in ponds and lakes, and problems with clogged water intakes, drains, and pipes. Forms of nitrogen (ammonium), in combination with pH and temperature variations, can cause water quality problems and be toxic to fish.

Fertilizers, animal wastes, failing septic systems, detergents, road deicing chemicals, automobile emissions, eroded soils, and organic matter such as yard waste are all contributors to excessive nutrient levels in urban/rural and agricultural stormwater runoff.

Toxic Organic Compounds

Excessive application of toxic organic compounds such as; insecticides, herbicides, fungicides, and rodenticides, or application of any of these shortly before or during rainfall can result in toxic pesticide chemicals being carried from agricultural lands, construction sites, parks, golf courses, and residential lawns and gardens to receiving waters. Many pesticide compounds are extremely toxic to aquatic organisms and can cause fish kills.

Other toxic organic compounds such as phenols, glycol ethers, esters, nitrosamines, and other nitrogen compounds also affect receiving waters. Common sources of these compounds include wood preservatives, antifreeze, dry cleaning chemicals, cleansers, and a variety of other chemical products. Like pesticides, these toxic organic compounds can be lethal to aquatic organisms.

Fecal Coliform Bacteria

Fecal coliform bacteria in water may indicate the presence of pathogenic (disease–causing) bacteria and viruses. Pet and other animal wastes, failing septic systems, livestock waste, and fertilizers can all contribute fecal coliform bacteria. Bacterial contamination has led to closures of numerous shellfish harvesting areas and swimming beaches in the Puget Sound region.

pH

The pH value of water is an indication of its relative acidity. The pH value can range from 0 to 14, with 6 to 8 being desirable for most bodies of water. A pH level outside this range will adversely affect plant and animal life. Waters with very high (basic) or very low (acidic) pH are corrosive to metal surfaces. There are several sources that can contribute to change of pH in runoff, including industrial processes that discharge acidic wastewater, solutions used in metal plating operations, acidic chemicals used in printing and graphic art businesses, cement used in concrete products and concrete pavement, and chemical cleaners used in homes and businesses.

ACTIVITIES THAT MAY AFFECT STORMWATER RUNOFF	Hydro-carbons	Pesticides-PCBs	Other	Oils-Greases	Nutrients	Metals	Sediment	Oxygen Demanding Substance	Fecal Coliform Bacteria	Abnormal pH
Storage Activities										
Storage of liquid materials in stationary tanks	Y	Y	Y	Y	Y	Y	N	Y	N	Y
Storage of liquid materials in portable containers	Y	Y	Y	Y	Y	Y	N	Y	N	Y
Storage of soil, sand, and other erodible materials	N	N	N	N	Y	Y	Y	Y	Y	Y
Storage of pesticides and fertilizers	N	Y	Y	Y	Y	Y	Y	Y	Y	Y
Storage and treatment of contaminated soils	Y	Y	Y	Y	N	Y	Y	N	N	Y
Storage and processing of food items	N	N	N	N	Y	N	Y	Y	N	N
Storage of solid wastes and food wastes (including cooking grease)	Y	Y	Y	Y	Y	Y	Y	Y	Y	Y
Storage of scrap and recycling materials (including auto recycling facilities)	Y	Y	Y	Y	N	Y	Y	Y	N	N
Treatment, storage, or disposal of dangerous wastes	Y	Y	Y	Y	Y	Y	Y	Y	Y	Y
Washing										
Cleaning or washing of tools and equipment	Y	Y	Y	Y	Y	Y	Y	Y	N	Y
Cleaning or washing of cooking equipment	N	N	N	Y	Y	N	Y	Y	N	Y
Vehicle washing and steam cleaning	Y	Y	Y	Y	Y	Y	Y	Y	N	Y
Interior washing operations (including mobile contractors)	N	N	Y	Y	Y	N	Y	N	N	Y
Pressure washing of buildings, rooftops, and other large objects	Y	N	Y	Y	Y	Y	Y	Y	N	Y
Transfer of Liquid Materials										
Truck or rail loading and unloading of liquid materials	Y	Y	Y	Y	Y	Y	N	Y	N	Y
Fueling operations	Y	N	N	Y	N	Y	N	Y	N	N
Engine repair and maintenance	Y	N	Y	Y	N	Y	Y	Y	N	Y
Production and Application										
Concrete and asphalt production at stationary sites	Y	N	Y	Y	N	Y	Y	N	N	Y
Concrete and asphalt application	Y	N	Y	Y	N	Y	Y	N	N	Y
Manufacturing and post-processing of metal products	Y	N	Y	Y	N	Y	Y	Y	N	Y
Painting, finishing, and coating of vehicles, products, and equipment	Y	N	Y	Y	N	Y	Y	Y	N	Y
Wood treatment and preserving	Y	N	Y	Y	N	Y	Y	Y	N	Y
Commercial composting	N	Y	Y	N	Y	Y	Y	Y	Y	N
Chemical applications-other than for landscaping	N	Y	Y	Y	N	Y	N	Y	N	Y

Y = Potentially present in activity area runoff N = No presence or impact

ACTIVITIES THAT MAY AFFECT STORMWATER RUNOFF	Hydro-carbons	Pesticides-PCBs	Other	Oils-Greases	Nutrients	Metals	Sediment	Oxygen Demanding Substance	Fecal Coliform Bacteria	Abnormal pH
Landscaping										
Landscaping activities	N	Y	N	Y	Y	Y	Y	Y	Y	N
Construction										
Clearing, grading, and preparation of land for small construction projects	Y	Y	N	Y	Y	Y	Y	Y	N	N
Demolition of buildings	N	N	Y	N	Y	Y	Y	N	N	Y
Building repair, remodeling, and construction	Y	N	Y	N	Y	Y	Y	N	N	Y
Boat building, maintenance, and repair	Y	N	Y	Y	Y	Y	Y	Y	N	Y
Other Activities										
Vehicle and equipment parking and storage	Y	N	Y	Y	N	Y	Y	N	N	N
Sidewalk maintenance	Y	Y	N	Y	N	Y	Y	Y	Y	Y
Swimming pool and spa cleaning and maintenance	N	N	N	N	Y	N	Y	Y	Y	Y
Keeping animals in controlled areas	N	Y	N	N	Y	N	Y	Y	Y	N
Keeping livestock in stables, pens, pastures or fields	N	N	N	N	Y	N	Y	Y	Y	N
Logging and log yards	Y	Y	N	Y	Y	N	Y	Y	N	N
Mining and quarrying of sand, gravel, and other materials	Y	N	N	Y	Y	Y	Y	N	N	Y
Well, directional and geotechnical drilling	Y	Y	Y	Y	N	Y	Y	Y	N	N
Roof vents and fugitive emissions (including dust)	N	N	Y	Y	N	Y	Y	N	N	Y
Street deicing operations	N	N	Y	N	N	N	Y	Y	N	Y
Wheel wash and tire bath operations	Y	N	Y	Y	N	Y	Y	N	N	Y
Potable water line flushing or tank maintenance	N	N	Y	N	N	Y	Y	N	Y	Y
Dust control, soil erosion, sediment control for manufacturing and other commercial operations	Y	Y	Y	N	N	Y	Y	Y	N	Y
Maintenance of public and private utility corridors and facilities	Y	Y	Y	Y	Y	Y	Y	Y	N	Y
Color events	N	N	Y	N	Y	N	Y	Y	N	N
Athletic fields	N	Y	N	N	Y	N	Y	N	N	N

Y = Potentially present in activity area runoff N = No presence or impact

CHAPTER 3

STORMWATER BEST MANAGEMENT PRACTICES FOR COMMERICAL ACTIVITIES

Containing:

- Pollution Prevention Practices
- BMP Activity Worksheet
- BMP Activity Sheets
  - » A-1 Required BMPs for All Properties with Commercial Activities
  - » A-2 Outdoor Storage of Liquid Materials in Stationary Tanks
  - » A-3 Storage of Liquid Materials in Portable Containers
  - » A-4 Storage of Soil, Sand, and Other Erodible Materials
  - » A-5 Storage of Dry Pesticides and Fertilizers
  - » A-6 Storage of Contaminated Soils
  - » A-7 Outdoor Storage or Processing of Food Items
  - » A-8 Storage of Solid Waste and Food Waste (Including Cooking Grease)
  - » A-9 Storage of Scrap and Recycling Materials (Including Auto Recycling Facilities)
  - » A-10 Treatment, Storage, or Disposal of Dangerous Wastes
  - » A-11 Cleaning or Washing of Tools and Equipment
  - » A-12 Cleaning or Washing of Food Service Areas and Equipment
  - » A-13 Vehicle Washing and Steam Cleaning
  - » A-14 Interior Washing Operations (Including Mobile Contractors)
  - » A-15 Pressure Washing of Buildings, Rooftops, and Other Large Objects
  - » A-16 Truck or Rail Loading and Unloading of Liquid or Solid Material
  - » A-17 Stationary Fueling Operations
  - » A-18 Vehicle and Equipment Repair and Maintenance
  - » A-19 Concrete, Asphalt Production and Recycling

- A-21 Manufacturing and Post–Processing of Metal Products
- A-22 Painting, Finishing, and Coating of Vehicles, Products, and Equipment
- A-23 Wood Treatment and Preserving
- A-24 Commercial Composting
- A-25 Chemical Applications – Other Than Landscaping
- A-26 Landscaping Activities and Vegetation Management
- A-27 Clearing and Grading of Land for Small Construction Projects
- A-28 Demolition of Buildings
- A-29 Building Repair, Remodeling, and Construction
- A-30 Ship/Boat/Watercraft Building, Maintenance, and Repair
- A-31 Vehicle and Equipment Parking and Storage
- A-32 Sidewalk Maintenance
- A-33 Swimming Pool and Spa Cleaning and Maintenance
- A-34 Keeping Animals in Controlled Areas
- A-35 Keeping Livestock in Stables, Pens, Pastures, or Fields
- A-36 Logging and Log Yards
- A-37 Mining and Quarrying of Sand, Gravel, and Other Materials
- A-38 Well, Utility, Directional and Geotechnical Drilling
- A-39 Roof Vents and Fugitive Emissions
- A-40 Street Deicing Operations
- A-41 Wheel Wash and Tire Bath Operations
- A-42 Potable Water Line Flushing or Tank Maintenance
- A-44 Dust Control for Commercial Operations
- A-45 Maintenance of Public and Private Utility Corridors and Facilities
- A-46 Color Events
- A-47 Older Stationary Fueling Operations
- A-48 Mobile Fueling

POLLUTION PREVENTION PRACTICES

The pollution prevention practices listed below are measures that should be considered at all times for improving pollution control. They are NOT REQUIRED, but should be incorporated in your BMP implementation plan. Application of these pollution prevention practices may reduce or eliminate the need for more complicated or costly BMPs.

- **Locate Activities as Far as Possible From Surface Drainage Paths**
- **Avoid the Activity or Reduce its Occurrence**
- **Use Less Material**
- **Use the Least Toxic Materials Available**
- **Create and/or Maintain Vegetated Areas Near Activity Locations**
- **Recycle as Much as Possible**
- **Educate Others About Stormwater Pollution Prevention**
- **Implement Treatment BMPs**

BMP ACTIVITY WORKSHEET

Use this worksheet to identify the activities that you conduct. Interpret the categories broadly.
Numbers A-1 to A-48 correspond to sheets located in Chapter 3.

Activity Sheet #	Type of activity	Do you conduct this activity? If so, where?	
		Indoors	Outdoors
Storage			
A-1	Required BMPs for All Properties with Commercial Activities		
A-2	Outdoor Storage of Liquid Materials in Stationary Tanks		
A-3	Storage of Liquid Materials in Portable Containers		
A-4	Storage of Soil, Sand, and Other Erodible Materials		
A-5	Storage of Dry Pesticides and Fertilizers		
A-6	Storage and Treatment of Contaminated Soils		
A-7	Outdoor Storage and Processing of Food Items		
A-8	Storage of Solid Wastes and Food Wastes (Including Cooking Grease)		
A-9	Storage of Scrap and Recycling Materials (Including Auto Recycling Facilities)		
A-10	Treatment, Storage, or Disposal of Dangerous Wastes		
A-31	Vehicle and Equipment Parking and Storage		
Washing			
A-11	Cleaning or Washing of Tools and Equipment		
A-12	Cleaning or Washing of Food Service Areas and Equipment		
A-13	Vehicle Washing and Steam Cleaning		
A-14	Interior Washing Operations (Including Mobile Contractors)		
A-15	Pressure Washing of Buildings, Rooftops, and Other Large Objects		
A-32	Sidewalk Maintenance		
A-41	Wheel Wash and Tire Bath Operations		
Transfer of Liquid Materials			
A-16	Truck or Rail Loading and Unloading of Liquid Materials		
A-17	Stationary Fueling Operations		
A-18	Engine Repair and Maintenance		
A-47	Older Stationary Fueling Operations		
A-48	Mobile Fueling Operations		

BMP ACTIVITY WORKSHEET			
Production and Application			
A-19	Concrete and Asphalt Production at Stationary Sites		
A-20	Concrete and Asphalt at Temporary Sites		
A-21	Manufacturing and Post–Processing of Metal Products		
A-22	Painting, Finishing, and Coating of Vehicles, Products, and Equipment		
A-23	Wood Treatment and Preserving		
A-24	Commercial Composting		
A-25	Chemical Applications–Other than for Landscaping		
A-37	Mining and Quarrying of Sand, Gravel, and Other Materials		
A-39	Roof Vents and Fugitive Emissions (Including Dust)		
A-44	Dust Control and Soil Erosion and Sediment Control for Manufacturing and Other Commercial Operations		
Landscaping			
A-26	Landscaping Activities		
Construction			
A-27	Clearing, Grading, and Preparation of Land for Small Construction Projects		
A-28	Demolition of Buildings		
A-29	Building Repair, Remodeling, and Construction		
A-30	Boat Building, Maintenance, and Repair		
Other			
A-33	Swimming Pool and Spa Cleaning and Maintenance		
A-34	Keeping Animals in Controlled Areas		
A-35	Keeping Livestock in Stables, Pens, Pastures or Fields		
A-36	Logging and Log Yards		
A-38	Well, Directional and Geotechnical Drilling		
A-40	Street Deicing Operations		
A-42	Potable Water Line Flushing or Tank Maintenance		
A-45	Maintenance of Public and Private Utility Corridors and Facilities		
A-46	Color Events		

BMP ACTIVITY SHEETS

Following are best management practices (BMPs) required for commercial, industrial, agricultural, public, and multifamily residential activities conducted in unincorporated King County.

King County's goal is to reduce pollution through education and prevention efforts, emphasizing source control BMPs before treatment. If, when the BMPs are implemented, are not enough to prevent contamination of stormwater, additional measures will be required.

Every property in the county has unique characteristics and drainage systems. The BMPs used on each property depend on the type of drainage system, slope and ground cover, and the pollution generating activities occurring on site. The activity sheets offer flexibility in BMP selection and, recognize the wide variety of site conditions that may be encountered. For manufacturing and commercial activities not addressed in these activity sheets refer to the Stormwater Management Manual for Western Washington Volume IV for the required Operational and Structural Source Control BMPs. *http://www.ecy.wa.gov/programs/wq/stormwater/manual.html*

A-1 Required Best Management Practices for all Properties with Commercial Activities

The following Best Management Practices (BMPs) are required for all commercial, industrial, agricultural, public, or residential properties with commercial activities in unincorporated King County.

Best Management Practices (BMPs) are required by King County Code 9.12. If the BMPs included here are not enough to prevent contamination of stormwater, you will be required to take additional measures.

Required BMPs:

Clean and Maintain Storm Drainage System

- Evaluate the condition of the catch basin by checking the amount of sediment in the bottom of the sump. Catch basins must be cleaned out when the solids, trash, and debris in the sump reaches one–half of the depth between the bottom of the sump and the bottom of the lowest inflow or outflow pipe connected to the catch basin or is at least 6 inches below this point.
- Hire a professional drainage contractor to inspect and maintain your system or clean the system yourself. If there is sediment or other debris in the drainage pipes, then a professional contractor must be hired to flush or jet out the pipes.
- Small amounts of floating oil can be soaked up with oil absorbent pads, bagged and disposed of as solid waste.
- Up to one cubic yard of nonhazardous solid material may be disposed of as solid waste in your regular garbage. If you exceed this threshold hire a professional drainage contractor. All of the solids and stagnant water collected from catch basin sumps must be disposed of properly. None of the sump contents can be flushed into the catch basin outflow pipe. Depending on the nature of the pollutants in the sump, and the associated types of activities taking place on the site, the sump contents may need to be handled as contaminated waste. Contractors who perform catch basin clean–out services are required to follow appropriate disposal requirements.
- Clean and maintain catch basins annually. Sites with activities generating a lot of sediments and other debris will have to inspect and clean out their catch basins more often. Frequent sweeping of paved parking and storage areas will save time and money in maintaining the drainage system.
- Other components of drainage systems such as ponds, tanks, and bioswales must also be maintained. If this maintenance is beyond your ability, contractors are available to complete this work.

Label All Storm Drain Inlets on Your Property

- Stencil or apply storm drain markers adjacent to storm drains to help prevent the improper disposal of pollutants. If the storm drain grate is stamped with warnings against polluting, then additional marking may not be required if there is no evidence of pollutants being dumped or washed into the storm drain.

Eliminate Illicit Connections to the Storm Drainage System

- Connections to the storm drainage system that convey substances other than stormwater are prohibited. Examples are connections from internal floor drains, HVAC systems, industrial processes, sinks, and toilets.
- Illicit connections must be immediately removed, permanently plugged or re–plumbed.
- The discharge must be re–plumbed so that it goes to the sanitary sewer, a septic system, an on–site treatment system, or a holding tank for off–site disposal. There are restrictions on what can be disposed of to the sanitary sewer and septic systems. You may be required to do additional investigation to determine where all stormwater and non–stormwater discharges go. This may include smoke, dye, and chemical testing or closed circuit television inspection.

Additional Information:

- Drainage System Maintenance Contractors Information Sheet
- For stencils and instructions or to determine if you have an illicit connection, contact King County Stormwater Services at 206–477–4811 or *kingcounty.gov/stormwater*.

A-2 Outdoor Storage of Liquid Materials in Stationary Tanks

Best Management Practices (BMPs) are required by King County Code 9.12. If the BMPs included here are not enough to prevent contamination of stormwater, you will be required to take additional measures.

Required BMPs:

- Store and contain liquid materials so if the tank leaks, the contents will not get into the storm drainage system, surface waters, or groundwater. This requires secondary containment or using a double–walled tank.
- Place small, gravity–fed farm fuel tanks without secondary containment on flat and open ground so that a spill or leak will not run downhill toward creeks, ditches, tiles, or drains before it can be contained and cleaned up.
- Place tanks on secure bases and stable ground.
- Install a spill control device (such as an oil/water separator or down–turned elbow) in the catch basins that collect runoff from the storage tank area if the liquid is oil, gas, or other material that separates from and floats on water.
- Place drip pans or absorbent materials under taps and at all potential drip and spill locations during filling and unloading of tanks and properly dispose of collected liquids and absorbent materials. Turn over or remove empty drip pans when not in use.
- Have spill control materials/spill kit near the tanks and any liquid transfer areas.
- Post a spill control plan and keep contact information current.
- Train all employees on required spill response methods and procedures.

Required Routine Maintenance:

- Sweep and clean paved storage areas as needed. Do not hose down the area to a storm drain.
- Check tanks and sumps regularly for leaks and spills and replace if compromised. Collect and dispose of all spilled liquids.
- Inspect spill control devices regularly and remove floating oil and debris.
- Collect and properly dispose of stormwater that collects in containment areas.

This activity does not apply to underground storage tanks or to businesses permitted by the Washington State Department of Ecology to treat, store, or dispose of dangerous wastes. Storage of reactive, combustible, or flammable liquids must comply with the King County Fire Code Title 17.

Additional Information

- Containment Information Sheet
- Oil/water separators Information Sheet
- Disposal Information Sheet

A-3 Storage of Liquid Materials in Portable Containers

This activity applies to the outdoor storage of liquids in portable containers and indoor storage where the potential exists to flow outside.

Best Management Practices (BMPs) are required by King County Code 9.12. If the BMPs included here are not enough to prevent contamination of stormwater, you will be required to take additional measures.

Required BMPs:

- Place tight–fitting lids on all containers.
- Enclose or cover the containers.
- Raise containers off the ground with a spill containment pallet or similar method to contain the material in the event of a spill or accident.
- Place drip pans or absorbent materials under all potential drip and spill locations during filling and unloading of containers. Collected liquids or soiled absorbent materials must be disposed of properly.
- Do not use metal drums if the liquid chemicals are corrosive.
- Label all containers with the product name and hazards.
- Have spill control materials/spill kit located nearby.
- Have a spill control plan with current contact information.

Required Routine Maintenance:

- Train employees on the site's spill plan and/or proper spill cleanup procedures.
- Sweep and clean paved storage areas as needed. Do not hose down the area to the storm drainage system.
- Routinely check containers and any containment sumps for leaks and spills and replace if compromised. Dispose of all spilled liquids properly.
- Inspect spill control devices routinely and remove oil and debris.
- Storage of reactive, combustible, or flammable liquids must comply with the King County Fire Code. The local fire district must be consulted for limitations on clearance of roof covers over containers used to store flammable materials.

Additional Information:

- Containment Information Sheet
- Disposal Information Sheet

For more information or assistance contact the King County Stormwater Services at 206–477–4811 and visit *kingcounty.gov/stormwater***.**

A-4 Outdoor Storage of Soil, Sand, and Other Erodible Materials

This activity covers both permanent and temporary sites.

Best Management Practices (BMPs) are required by King County Code 9.12. If the BMPs included here are not enough to prevent contamination of stormwater, you will be required to take additional measures.

Required BMPs:

- Cover and contain the stockpiled materials, unless the material cannot wash into the storm drain system or surface waters and cannot be blown away by the wind.
- Covers must be in place at all times when the stockpile is not in active use.
- Do not hose down the contained stockpile area to the storm drainage system.
- Implement erosion control practices if the stockpiles cannot feasibly be covered and contained.
- Install catch basin inserts to collect excess sediment and debris if necessary.

Required Routine Maintenance

- Sweep paved surfaces to collect solid materials. Do not hose down area to the storm drain system.
- Check covers over the stockpiles to ensure they are still functioning properly.
- Inspect and maintain catch basin inserts .

More Detailed Information Can be Found at:

- Covering Information Sheet
- Containment Information Sheet
- Catch Basin Insert Information Sheet
- Erosion control practices – King County Surface Water Design Manual, Appendix D

For more information or assistance contact the King County Stormwater Services at 206–477–4811 and visit *kingcounty.gov/stormwater***.**

A-5 Storage of Dry Pesticides and Fertilizers

Best Management Practices (BMPs) are required by King County Code 9.12. If the BMPs included here are not enough to prevent contamination of stormwater, you will be required to take additional measures.

Required BMPs:

- Store all material so that it cannot come into contact with water.
- Containers and bags must be covered, intact, and off the ground.

Required Routine Maintenance:

- Immediately clean up any spilled fertilizer or pesticides and ensure that the materials are kept in the designated covered or contained areas.
- Store and maintain spill cleanup materials near the storage area.
- Sweep paved storage areas as needed. Collect and dispose of spilled materials. Do not hose down the area.

More Detailed Information Can be Found at:

- Covering Information Sheet

For more information or assistance contact the King County Stormwater Services at 206–477–4811 and visit *kingcounty.gov/stormwater***.**

A-6 Storage of Contaminated Soils

This applies to the storage and/or treatment of contaminated soils such as those excavated during underground fuel tank removal or onsite soil remediation.

Best Management Practices (BMPs) are required by King County Code 9.12. If the BMPs included here are not enough to prevent contamination of stormwater, you will be required to take additional measures.

Required BMPs:

- Cover contaminated soils to keep them from coming into contact with stormwater.
- Contain the material so that nothing flows into or out of the stockpile.

Required Routine Maintenance:

- Sweep paved storage areas as needed. Collect and dispose of soil particles. Do not hose down the area.
- Stock cleanup materials near the storage area.

The Washington State Department of Ecology regulates businesses engaged in this activity. In addition, a permit from the Puget Sound Clean Air Agency is required if the treatment method for removing soil contaminants involves forcing air through the soil.

Additional Information:

- Covering Information Sheet
- Disposal Information Sheet

For more information or assistance contact the King County Stormwater Services at 206–477–4811 and visit *kingcounty.gov/stormwater***.**

A-7 Outdoor Storage and Processing of Food Items

Best Management Practices (BMPs) are required by King County Code 9.12. If the BMPs included here are not enough to prevent contamination of stormwater, you will be required to take additional measures.

Required BMPs – Storage:

- Store all meat and fish products and wastes in leak–proof containers.
- Do not drain water or ice from meat and fish storage to the storm drainage system.

Required Routine Maintenance – Storage:

- Sweep and/or pickup dirt and food fragments. Place collected waste in leak–proof containers prior to disposal.
- Do not hose down the area to the storm drainage system.
- Stock cleanup materials near the storage area.

Required BMPs – Processing:

- Minimize use of water to clean fruits and vegetables to avoid excessive runoff.
- Capture all water used for cleaning and processing and discharge to the sanitary sewer or other treatment facility and not to the storm drain system.

For more information or assistance contact the King County Stormwater Services at 206–477–4811 and visit *kingcounty.gov/stormwater***.**

A-8 Storage or Solid and Food Wastes (Including Cooking Grease)

This refers to garbage dumpsters and outdoor waste containers such as cooking oil/grease receptacles.

Best Management Practices (BMPs) are required by King County Code 9.12. If the BMPs included here are not enough to prevent contamination of stormwater, you will be required to take additional measures.

Required BMPs:

- Store wastes in leak–proof containers with solid lids.
- Keep dumpsters closed except when adding waste.
- Used cooking oil/grease containers should be labeled with their contents.
- Clean up any spills immediately using dry methods. Grease cannot be left on the ground.
- Have spill cleanup materials nearby.
- Use a lid or cover when transporting cooking oil/grease containers from kitchens to outside grease containers.
- Ensure that drip pans or absorbent materials are used whenever grease containers are emptied by vacuum trucks or other means.
- Dispose of collected cooking oil/grease as garbage if it is not being recycled. Do not dispose of fats, oils or grease (FOG) into the sanitary sewer or septic system.

Required Routine Maintenance:

- Keep the area around the grease container clean and free of debris.
- Check storage containers frequently for leaks and to ensure that lids are on securely.
- Replace leaking or damaged containers. Contact waste hauler for replacements.
- Sweep and clean the storage area as needed if it is paved. Do not hose down waste storage areas.
- When cleaning or rinsing waste containers, dispose of all wastewater into a sanitary sewer. If no sewer is available, store in a holding tank, dead end sump, or truck off site to an approved disposal location.

Additional Information:

- Disposal Information Sheet

For more information or assistance contact the King County Stormwater Services at 206–477–4811 and visit *kingcounty.gov/stormwater***.**

A-9 Storage of Scrap and Recycling Materials (Including Auto Recycling Facilities)

This applies to the salvaging and storage of scrap metal, scrapped equipment, junked appliance and vehicles, empty metal drums and recyclable materials such as cans, bottle, plastic and paper products.

Best Management Practices (BMPs) are required by King County Code 9.12. If the BMPs included here are not enough to prevent contamination of stormwater, you will be required to take additional measures.

Required BMPs:

- Check incoming scrap materials, vehicles, and equipment for potential fluid contents and batteries.
- Drain and transfer fluids from vehicles and other equipment only in a designated area with a waste collection system or over drip pans.
- Cover and contain vehicle and equipment dismantling areas to prevent rainwater contact.
- Remove batteries and store off the ground in a leak proof container and under cover.
- Cover and raise any materials that may contaminate stormwater. A tarp and a pallet are acceptable.
- Cover and contain stockpiles of any material that has the potential to contaminate stormwater runoff.

Required Routine Maintenance:

- Inspect storage areas regularly and promptly clean up any leaks, spills, or contamination.
- Sweep scrap storage areas as needed. Do not hose down anything to a storm drain.
- Keep spill cleanup materials in a location known to all. Ensure that employees are familiar with the site's spill control plan and/or proper spill cleanup procedures.
- If you are involved in transporting any of these materials you must carry spill cleanup material in the vehicle to capture any spilled liquids, and have an impermeable liner in the bed of your truck to capture any spilled or leaked materials. Properly dispose of or reuse any collected fluids.

Supplemental BMPs:

- Install catch basin inserts to collect excess sediment and debris if necessary. Inspect and maintain catch basin inserts to ensure they are working correctly.

Additional Information:

- Covering Information Sheet
- Containment Information Sheet
- Catch Basin Insert Information Sheet

All containers used to store fluids must comply with Activity Sheets A-2 and A-3 regarding secondary containment. Storage of gasoline must comply with the appropriate Fire Codes.

For more information or assistance contact the King County Stormwater Services at 206–477–4811 and visit *kingcounty.gov/stormwater*.

A-10 Treatment, Storage, or Disposal of Dangerous Wastes

This activity applies to businesses that are permitted by the Washington State Department of Ecology (Ecology) to treat, store, or dispose of dangerous wastes.

Best Management Practices (BMPs) are required by King County Code 9.12. If the BMPs included here are not enough to prevent contamination of stormwater, you will be required to take additional measures.

Required BMPs:

- Detailed BMPs are not included here because treatment, storage, and disposal (TSD) site requirements are beyond the level of typical BMP application.
- Ecology regulates these facilities with specific requirements, which include the need for a National Pollutant Discharge Elimination System (NPDES) permit

Additional Information:

- Spill Response and Cleanup Information Sheet
- Contact the Washington State Department of Ecology at 425–649–7000 or 360–407–6000.

For more information or assistance contact the King County Stormwater Services at 206–477–4811 and visit *kingcounty.gov/stormwater***.**

A-11 Cleaning or Washing of Tools and Equipment

This activity includes cleaning landscaping equipment such as lawn mowers and weed whackers; tools used at equipment repair shops; and, manufacturing equipment such as saws, grinders and screens.

Best Management Practices (BMPs) are required by King County Code 9.12. If the BMPs included here are not enough to prevent contamination of stormwater, you will be required to take additional measures.

Required BMPs:

- Discharge tool and equipment wash water to the sanitary sewer or a holding tank for offsite disposal. Discharge of wash water to the storm drain system is not allowed without treatment and an Individual Wastewater Discharge permit from the Washington State Department of Ecology.
- Rinse lawnmowers with water only on a lawn or similar area where grass clippings will not get into the storm drain system or surface waters when it rains.
- Oily, soapy or otherwise dirty water is not allowed to discharge to any stormwater system or surface water.

Additional Information:

- Disposal Information Sheet
- Ecology's Vehicle and Equipment Washwater Discharges/Best Management Practices Manual (*https://fortress.wa.gov/ecy/publications/summarypages/95056.html*)

You are encouraged to recycle your wash water with an enclosed loop system or use self–contained parts washers. Numerous products are commercially available that recycle and contain wash water and cleaning solvents.

For more information or assistance contact the King County Stormwater Services at 206–477–4811 and visit *kingcounty.gov/stormwater***.**

A-12 Cleaning or Washing of Food Service Areas and Equipment

Best Management Practices (BMPs) are required by King County Code 9.12. If the BMPs included here are not enough to prevent contamination of stormwater, you will be required to take additional measures.

Required BMPs:

- The cleaning of cooking equipment, filter screens, floor mats etc. must be done indoors.
- All wash and rinse water must be discharged to the sanitary sewer or the septic system.
- Floor mop water must not be poured outside. Instead pour it into a sink or toilet.
- Wash and rinse water containing fats, oils or grease (FOG) may require pretreatment to remove FOG prior to disposal to the sanitary sewer or septic system.
- Do not dispose of wash or rinse waster containing floor stripping or disinfectant chemicals into the septic system as they can seriously inhibit wastewater treatment and cause the system to fail.

For more information or assistance contact the King County Stormwater Services at 206–477–4811 and visit *kingcounty.gov/stormwater***.**

A-13 Vehicle Washing and Steam Cleaning

This applies to all vehicle washing including mobile vehicle washing services. For exterior vessel washing refer to A-30 Ships/Boats/Watercraft Building, Maintenance, and Repair.

Best Management Practices (BMPs) are required by King County Code 9.12. If the BMPs included here are not enough to prevent contamination of stormwater, you will be required to take additional measures.

Required BMPs:

- Commercial car washing must be done in a contained area where all water is collected and either recycled or discharged to the sanitary sewer.
- Occasional vehicle washing with a mild (pH neutral) soap or detergent on gravel, grass, or loose soil is allowed as long as all the water soaks into the ground and you only wash the exterior of the vehicle.
- If your business is located in an area designated as a Critical Aquifer Recharge Area (CARA), infiltration may not be allowed.
- The use of "environmentally friendly", "nontoxic" or "biodegradable" soaps does NOT make it acceptable to discharge vehicle wash water to any storm drain system or surface waters. All soaps are harmful to aquatic organisms.
- Do not wash vehicles on paved areas or wash or rinse the engine compartment or the underside of vehicles, unless you do one of the following:
  - » Designate a wash area for all vehicles where the wash water is collected and discharged to the sanitary sewer or is processed through an enclosed recycling system;
  - » Use a portable collection system that captures all the wash water for proper disposal;
  - » Take the vehicles to a commercial car wash or use a mobile washer who collects the wash water for proper disposal; or
  - » Ensure that the paved area drains directly to grass, gravel or loose soil and there is no possibility of the wash water getting into the storm drain system;
- Do not conduct oil changes or other engine maintenance in the designated washing area.
- Rinsing the outside of a vehicle with water and without any soaps or detergents, is allowed as long as the water is filtered prior to discharge to the storm drain system.
- At multifamily properties it may be necessary to post signs at the designated wash areas, indicating where and how vehicle washing must be done.

Additional Information:

- Disposal Information Sheet
- Catch Basin Insert Information Sheet
- Ecology's Vehicle and Equipment Washwater Discharges/ Best Management Practices Manual (*https://fortress.wa.gov/ecy/publications/summarypages/95056.html*)

For more information or assistance contact the King County Stormwater Services at 206–477–4811 and visit *kingcounty.gov/stormwater*.

A-14 Interior Washing Operations

Best Management Practices (BMPs) are required by King County Code 9.12. If the BMPs included here are not enough to prevent contamination of stormwater, you will be required to take additional measures.

Required BMPs:

- Dispose of wash and rinse water (including floor mop water) to the sanitary sewer or septic system. Wash water may not be discharged outdoors or into the storm drainage system.
- Do not dispose of wash or rinse waster containing floor stripping or disinfectant chemicals into the septic system as they can seriously inhibit wastewater treatment and cause the system to fail.
- Do not dispose of sludge outdoors or into the storm drainage system.

Additional Information:

- Disposal Information sheet

Contact the local sewer authority and the King County Wastewater Treatment Division Industrial Waste Section at 206–477–5371 for more information on disposal to the sanitary sewer system.

For more information or assistance contact the King County Stormwater Services at 206–477–4811 and visit *kingcounty.gov/stormwater***.**

A-15 Pressure Washing of Buildings, Rooftops, and Other Large Objects

Best Management Practices (BMPs) are required by King County Code 9.12. If the BMPs included here are not enough to prevent contamination of stormwater, you will be required to take additional measures.

Required BMPs:

- If the area is paved and soaps, detergents or any other chemical (including pesticides) are used, use a sump pump, wet vacuum or similar device that enables collection of wash water and associated solids so they can be disposed of properly. The wash water must not go to the storm drain system.
- If the area is paved but soaps and detergents are not being used, the wash water runoff does not have to be collected but it does have to be filtered to trap solid materials.
- The wash water does not need to be collected if the area is landscaped and the water can soak into the ground without running into the storm drain system.
- If the surface being pressure washed is painted with lead or other heavy metal–bearing paint (such as chromium or cadmium), you must use a commercial pressure washing service that will collect, test, and properly dispose of the wastewater.
- Block or disconnect all rooftop downspouts when washing roofs. The wash/waste water must be directed to pervious areas such as landscaping or gravel for infiltration, collected and disposed of to the sanitary sewer, or taken off site for appropriate disposal.

Additional Information:

- Disposal Information sheet
- Catch basin insert Information sheet

Note: Pressure washing of boats in boat yards, marinas, and dry dock areas is covered by a National Pollutant Discharge Elimination System (NPDES) permit, administered by the Washington State Department of Ecology, so the BMPs listed above may not apply to pressure washing in these locations.

For more information or assistance contact the King County Stormwater Services at 206–477–4811 and visit *kingcounty.gov/stormwater***.**

A-16 Truck or Rail Loading and Unloading of Liquid or Solid Material

Best Management Practices (BMPs) are required by King County Code 9.12. If the BMPs included here are not enough to prevent contamination of stormwater, you will be required to take additional measures.

Required BMPs:

- Place drip pans underneath hose and pipe connections and other leak–prone spots during liquid transfer operations, and when making and breaking connections.
- Immediately clean up any material that has spilled during transfer operations.
- Have a current spill control plan.
- Train employees to follow proper loading and unloading procedures. Ensure that employees are familiar with the site's spill control and clean–up plans and/or proper spill cleanup procedures.
- Store and maintain appropriate spill cleanup materials in a location known to all.
- Conduct loading and unloading operations under cover if possible.

Required Routine Maintenance:

- Clean drip pans as needed, and dispose of contents properly.
- Check equipment for leaks on a regular basis and repair if needed.
- Sweep loading/unloading areas as needed. Never wash anything to the storm drains or the street.

Supplemental BMPs:

- Pave areas where liquids are transferred to and from tanker trucks. Use Portland cement concrete for fuels that react with asphalt, such as gasoline.
- Install a curb or dike, or slope the area to prevent stormwater from running on to the loading/unloading area and washing away spilled material.

Additional Information:

- Disposal Information Sheet

For more information or assistance contact the King County Stormwater Services at 206–477–4811 and visit *kingcounty.gov/stormwater***.**

A-17 Stationary Fueling Operations

These BMPs apply to the fueling of vehicles and equipment, including gas stations and fuel pumps to service equipment or vehicles, where the fuel pumps were constructed or substantially remodeled after July 1995. "Substantial remodeling" means replacing the canopy, or relocating or adding one or more fuel dispensers in such a way that modifies the impervious concrete paving in the fueling area. For fueling operations installed prior to July 1995, see Activity Sheet A-47 Older Stationary Fueling Operations. For mobile fueling operations see A-48 Mobile Fueling Operations.

Best Management Practices (BMPs) are required by King County Code 9.12. If the BMPs included here are not enough to prevent contamination of stormwater, you will be required to take additional measures.

Applicable Structural Source Control BMPs:

- The fueling island must have a roof or canopy to prevent the direct entry of precipitation onto the spill containment pad. The roof or canopy should cover the spill containment pad (within the grade break or fuel dispensing area) and extend several additional feet to reduce the introduction of windblown rain. Roofs and canopies 10 feet or less in height must have a minimum overhang of 3 feet on all sides. Roofs and canopies greater than 10 feet in height mush have a minimum overhand of 5 feet on each side.
- Plumb all roof drains to storm drains outside the fueling containment area.
- Design the fueling island to control spills (dead–end sump or spill–control separator) and to treat collected stormwater and/or wastewater. Slope the concrete containment pad around the fueling island toward drains; either trench drains, catch basins and/or a dead–end sump. The slope of the drains shall not be less than 1 percent.
- Storm drains plumbed to treatment facilities must have a normally closed shutoff valve; or
- Design the fueling island as a spill containment pad with a sill or berm raised to a minimum of four inches to prevent the runoff of spilled liquids and to prevent run–on of stormwater from the surrounding area. Raised sills are not required at the open–grate trenches that connect to an approved drainage–control system.
- The fueling pad must be constructed of impervious concrete. Asphalt is not acceptable.
- Convey stormwater collected on the fuel island containment pad to a sanitary sewer system, if approved by the sanitary authority, or to an approved treatment system such as an oil/water separator. Discharges from treatment systems to storm drains or surface water or to the ground must not display ongoing or recurring visible sheen and must not contain oil and grease.
- Alternatively, collect stormwater from the fuel island containment pad and hold for proper off–site disposal.
- Approval from the local sewer authority is required for conveyance of any fuel–contaminated stormwater to a sanitary sewer.
- Transfer the fuel from the delivery tank trucks to the fuel storage tank over impervious, contained areas and ensure that appropriate overflow protection is used. Alternatively, cover nearby storm drains during the filling process and use drip pans under all hose connections.

Additional BMP for Vehicles or Equipment 10 Feet in Height or Greater:

A roof or canopy may not be feasible at fueling stations that regularly fuel vehicles or equipment that are 10 feet in height or greater. At those types of fueling facilities, the following BMPs apply, as well as the applicable BMPs for fueling stations:

- If a roof or canopy is impractical, the concrete fueling pad must be equipped with emergency spill control including a shutoff valve for drainage from the fueling area. Maintain the valve in the closed position in the event of a spill. An electronically actuated valve is preferred to minimize the time lapse between spill and containment.
- The valve may be opened to convey contaminated stormwater to a sanitary sewer, if approved by the sewer authority, or to oil–removal treatment such as an API or CP oil/water separator, catch basin insert, or equivalent treatment, and then to a basic treatment BMP. Discharges from treatment systems to storm sewer or surface water or to the ground must not display ongoing or recurring visible sheen and must not contain oil and grease.

Required Operational BMPs:

- Prepare an emergency spill response and cleanup plan and have designated trained person(s) available either on–site or on call at all times to promptly and properly implement that plan and immediately cleanup all spills. Keep suitable cleanup materials, such as dry adsorbent materials, on site to allow prompt cleanup of a spill.
- Immediately notify Ecology, the local jurisdiction, and the local Sewer Authority if a spill may reach sanitary or storm sewers, ground water, or surface water, in accordance with federal and Ecology spill reporting requirements.
- Train employees on the proper use of fuel dispensers. Post signs in accordance with the Uniform Fire Code (UFC) or International Fire Code (IFC). Post "No Topping Off" signs. Make sure that the automatic shutoff on the fuel nozzle is functioning properly.
- The person conducting the fuel transfer must be present at the fueling pump during fuel transfer.
- Keep drained oil filters in a suitable container or drum.
- Never hose down the fueling area to the storm drains. Contaminated runoff must be collected for proper disposal.
- Do not use dispersants or soap to clean up spills or sheens.

Supplemental BMPs:

- Use absorbent materials in or around storm drain inlets on the property to filter oily runoff. Used materials containing oil must be picked up by a qualified disposal contractor.
- A catch basin insert configured for oil removal may remove some of the pollutants in runoff from this activity. The oil–absorbent filter media must retain absorbed oil during future storm events. See the King County Surface Water Design Manual for more information regarding which filter media provide acceptable oil retention.

Additional Information:

- Covering Information Sheet
- Containment Information Sheet
- Oil/Water Separators Information Sheet and Surface Water Design Manual
- Spill Response and Clean–up Plan Information Sheet
- Catch Basin Insert Information Sheet

For more information or assistance contact the King County Stormwater Services at 206–477–4811 and visit *kingcounty.gov/stormwater***.**

A-18 Vehicle and Equipment Repair and Maintenance

This also applies to mobile vehicle and equipment repair and maintenance operations.

Best Management Practices (BMPs) are required by King County Code 9.12. If the BMPs included here are not enough to prevent contamination of stormwater, you will be required to take additional measures.

Required BMPs:

- Inspect all incoming vehicles and equipment for leaks and use drip pans or absorbent material if necessary, while waiting for service.
- Clean up any spilled fluids immediately. The collected material and absorbents must be disposed of, reused, or recycled properly.
- Cover, contain, and label waste oil, antifreeze, and other fluids.
- Store batteries upright in a secure, contained, covered location (not outside on the ground). Check to ensure batteries are not damaged or leaking. Keep battery acid–neutralizing materials, such as baking soda, available near the storage area.
- Regular work at stationary locations must be done indoors or in a covered area using a tarp or drip pans beneath the vehicle or equipment to capture all spills and drips.
- Ensure that employees are familiar with the site's spill control and clean–up plans and are trained in the proper handling, storage, and disposal of all fluids.
- Store and maintain appropriate spill cleanup materials in an easily accessible location.

Required Routine Maintenance

- Inspect parking and outside storage areas daily for leaks and drips.
- Sweep paved work areas as needed. Soak up vehicle fluids with rags or other absorbent material immediately. Never wash paved areas to a storm drain or the street.

Supplemental BMPs:

- Absorbent material such as pillows or booms can be used around storm drains or in catch basins to absorb oil and other substances.
- A catch basin insert may be necessary. Catch basin inserts require frequent maintenance to be effective.

Additional Information:

- Covering Information Sheet
  - » Containment Information Sheet
  - » Disposal Information Sheet
  - » Storage of Liquid Materials in Portable Containers – Activity Sheet A-3
  - » Catch Basin Insert Information Sheet

Call the Business Waste Line at 206–263–8899 or see *http://www.govlink.org/hazwaste/business/index.cfm* for information on the proper disposal and recycling of vehicle fluids, filters, batteries and used sorbent material.

For more information or assistance contact the King County Stormwater Services at 206–477–4811 and visit *kingcounty.gov/stormwater***.**

A-19 Concrete, Asphalt Production, and Recycling

This applies to permanent production sites as well as batch plants.

Best Management Practices (BMPs) are required by King County Code 9.12. If the BMPs included here are not enough to prevent contamination of stormwater, you will be required to take additional measures.

Required Best Management Practices (BMPs):

- Discharge all process water generated from production, pouring, crushing and equipment cleaning activities to a sump, process water recycling system, or sanitary sewer system. Never wash contaminated water to the storm drainage system. Discharge to the sanitary sewer system requires approval from the local sewer district/agency.
- Contain the production and pouring area to prevent pollutants from being washed to the storm drain system.

Required Routine Maintenance:

- Vacuum paved areas as necessary to prevent dust and particle mobilization. Collect loose chunks of aggregate and raw material particles for recycling or proper disposal. Do not hose down the area to a storm drain.
- Dust suppression water may not be discharged to the storm drain system.

Supplemental BMPs:

- A catch basin insert may be necessary. Catch basin inserts require frequent maintenance to be effective.
- Pave the mixing, production, and/or pouring area(s) with a slope that drains to a central collection area.
- Stormwater coming into contact with concrete crushing operations must be collected and discharged to an approved discharge location.
- When pH levels in stormwater rise above 8.5, the pH must be adjusted to the acceptable range of 6.5 to 8.5. Refer to the King County Surface Water Design Manual Appendix D Sections D.2.2.7 and D.2.2.8 for information on pH adjustment.

Additional Information:

- Disposal Information Sheet
- Containment Information Sheet
- Catch Basin Inserts Treatment Sheet

Mobile concrete pouring and asphalt applications are covered under Activity Sheet A-20. This does not cover concrete production at mining or sand and gravel sites covered by a King County Clearing and Grading Permit or National Pollutant Discharge Elimination System (NPDES) Sand and Gravel Permit issued by the Washington State Department of Ecology.

For more information or assistance contact the King County Stormwater Services at 206–477–4811 and visit *kingcounty.gov/stormwater***.**

A-20 Concrete and Asphalt Application

This applies to sites where asphalt is applied or small amounts of concrete that is hand mixed on site. The application of premixed concrete must follow the standards in the King County Surface Water Design Manual.

Best Management Practices (BMPs) are required by King County Code 9.12. If the BMPs included here are not enough to prevent contamination of stormwater, you will be required to take additional measures.

Required Best Management Practices (BMPs):

- Use drip pans, ground cloths, heavy cardboard or plywood wherever concrete, asphalt, asphalt emulsion and drips are likely to spill, such as beneath discharge points from equipment.
- Cover and contain all nearby storm drains at the beginning of the workday. Drain covers and other containment devices are commercially available to keep runoff out of the storm drainage system. All solids collected must be disposed of properly at the end of the workday (or more frequently) prior to removing the containment or cover device(s).
- Contain and collect the slurry from exposed aggregate washing. Never allow the slurry to get into a storm drain, ditch, roadway shoulder or gutter. Use a storm drain cover, inlet protection or other containment device, such as a hand–dug, lined sump to direct and contain slurry. All collected runoff must be disposed of properly.
- Do not discharge concrete, slurry, or rinse water into gutters, storm drains, or drainage ditches or onto the paved surface of a roadway or driveway.
- Designate an area onsite where hand tools will be cleaned and the water collected for disposal. Commercial products and services are also available for concrete, slurry, and rinse water containment and disposal.
- Do not use diesel fuel for cleaning or prepping asphalt tools and equipment.

Required Routine Maintenance:

- Sweep the pouring area at the end of the job or more frequently if needed. Collect loose aggregate chunks and dust. Do not hose down the area to a storm drain.

Supplemental BMPs:

- A catch basin insert may be necessary for sediment removal. Catch basin inserts require frequent maintenance to be effective.

Additional Information:

- Covering Information Sheet
- Containment Information Sheet
- Disposal Information Sheet
- Catch Basin Insert Information Sheet
- King County Surface Water Design Manual Appendix D – Concrete Handling
- King County Surface Water Design Manual Appendix D – Concrete Washout Area

For more information or assistance contact the King County Stormwater Services at 206–477–4811 and visit *kingcounty.gov/stormwater***.**

A-21 Manufacturing and Post-Processing of Metal Products

This applies to mills, foundries, and fabricators that manufacture and/or post process metal products at stationary sites. Painting, finishing, and coating of metal products are covered under Activity Sheet A-22.

Best Management Practices (BMPs) are required by King County Code 9.12. If the BMPs included here are not enough to prevent contamination of stormwater, you will be required to take additional measures.

Required BMPs:

- Keep metal fragments and debris (grindings, cuttings, dust, shavings, etc.) from coming into contact with stormwater. Cover the work area or perform the work indoors.
- Discharge process wastewater to a sanitary sewer, holding tank, or process treatment system. Do not discharge to the storm drain system.
- Cover galvanized metal product storage and processing areas; or capture, treat, and properly dispose of stormwater coming into contact.

Required Routine Maintenance BMPs:

- Sweep the work and pouring area at least daily to collect metal fragments and debris and prevent stormwater contamination. Do not hose down the area to the storm drainage system.

Supplemental BMPs:

- Install catch basin inserts to collect excess sediment and debris if necessary. Inspect and maintain catch basin inserts to ensure they are working correctly.

Additional Information:

- Covering Information Sheet
- Disposal Information Sheet
- Catch Basin Insert Information Sheet

Businesses may be required to apply for and obtain a National Pollutant Discharge Elimination System (NPDES) permit from the Washington State Department of Ecology.

For more information or assistance contact the King County Stormwater Services at 206–477–4811 and visit *kingcounty.gov/stormwater*.

A-22 Painting, Finishing, and Coating of Vehicles, Products and Equipment

This includes preparation work such as sanding and blasting. Painting buildings is covered in Activity Sheet A-29. Painting and other work on vessels is covered in A-30.

Best Management Practices (BMPs) are required by King County Code 9.12. If the BMPs included here are not enough to prevent contamination of stormwater, you will be required to take additional measures.

Required BMPs:

- Enclose all work (unless the work is too large) according to the Puget Sound Clean Air Agency requirements.
- Approved paint booths must be in place prior to any vehicle painting. Properly dispose of paint booth filters as required under Dangerous and Hazardous Waste Regulations.
- Collect dust and debris from sanding operations using vacuum sanders, ground cloths or similar methods. Do not hose down the area to the storm drainage system.
- Use ground cloths and/or drip pans in outdoor locations where paints, finishes, and other liquid materials are mixed and/or applied.

Required Routine Maintenance:

- Store and maintain appropriate spill cleanup materials in a location known to all.
- Train all employees on the site's spill control plan and/or proper spill cleanup procedures.
- Sweep the area at the end of each day at a minimum. Do not hose down the area to a storm drain.

For more information or assistance contact the King County Stormwater Services at 206–477–4811 and visit *kingcounty.gov/stormwater***.**

A-23 Wood Treatment and Preserving

This activity applies to wood treatment operations performed outdoors including storage of freshly treated wood materials outdoors. It includes permanent sites as well as temporary sites.

Best Management Practices (BMPs) are required by King County Code 9.12. If the BMPs included here are not enough to prevent contamination of stormwater, you will be required to take additional measures.

Required BMPs:

- Collect drips and spills using ground cloths or drip pans.
- Store portable containers of wood preservative compounds indoors or in a covered location with appropriate secondary containment when not in use.
- Hold dipped lumber over dip tanks until dripping ceases (if applicable).
- Store treated lumber in a covered and paved area until fully dry.
- Cover and contain the storage area to prevent stormwater from running into the covered area.

Required Routine Maintenance BMPs:

- Cover outdoor dip tanks when not in use.

Additional Information:

- Storage of Liquid Materials in Portable Containers – Activity Sheet A-3
- Containment Information Sheet

Large scale commercial operations are required to have a stormwater National Pollutant Discharge Elimination System (NPDES) permit from the Washington State Department of Ecology.

For more information or assistance contact the King County Stormwater Services at 206–477–4811 and visit *kingcounty.gov/stormwater***.**

A-24 Commercial Composting

This activity applies to commercial receiving and composting wastes.

Best Management Practices (BMPs) are required by King County Code 9.12. If the BMPs included here are not enough to prevent contamination of stormwater, you will be required to take additional measures.

Required BMPs:

- Screen incoming waste for dangerous materials and solid waste. These materials may not be accepted for composting and must be properly disposed of.
- Locate composting areas on impervious surfaces.
- Drain all leachate from composting operations to a sanitary sewer, holding tank, or on–site treatment system. Leachate may not go to the storm drain system or groundwater.
- Collect the leachate with a dike or berm, or with intercepting drains placed on the down slope side of the compost area.
- Direct outside runoff away from the composting areas.

Required Routine Maintenance:

- Clean up debris from yard areas as needed to prevent stormwater contamination.

Supplemental BMPs:

- Install catch basin inserts to collect excess sediment and debris if necessary. Inspect and maintain catch basin inserts to ensure they are working correctly.

Additional Information:

- Disposal Options Information Sheet
- Containment Information Sheet. Refer to the King County Health Code for full compliance.
- Catch Basin Insert Information Sheet

When stormwater is allowed to contact any active composting area, it becomes leachate and must be separated from stormwater runoff. All commercial–composting operations must comply with Seattle–King County Health Department requirements. Commercial composting operations require a National Pollutant Discharge Elimination System (NPDES) permit from the Department of Ecology.

For more information or assistance contact the King County Stormwater Services at 206–477–4811 and visit *kingcounty.gov/stormwater***.**

A-25 Chemical Applications - Other Than Landscaping

This activity applies to the use of pesticides, herbicides or other chemicals for such purposes as removing moss from rooftops, killing nuisance rodents, and using fungicides to preserve patio decks. Application of pesticides for landscaping is covered under Activity Sheet A-26 Landscaping Activities. Pressure washing of roofs is under Activity Sheet A-15.

Best Management Practices (BMPs) are required by King County Code 9.12. If the BMPs included here are not enough to prevent contamination of stormwater, you will be required to take additional measures.

Required BMPs:

- Avoid excessive application of chemicals. Follow manufacturers' application guidelines and label directions.
- Never apply pesticides or other chemicals in the rain.
- Clean up any spilled chemicals immediately. Do not hose down to a storm drain or conveyance ditch.
- Do not spray pesticides within 100 feet of open waters, including wetlands, ponds, and streams, unless approved by local jurisdiction.
- Train employees on proper application and disposal practices

Supplemental BMPs:

- Integrated pest management (IPM), a comprehensive approach to the use of pesticides which minimizes application and stresses selection of proper products and tailored application rates, is the most effective BMP measure that can be taken. IPM is applicable to businesses that frequently apply pesticides.
- Use manual pest control strategies such as physically scraping moss from rooftops, high–pressure sprayers to remove moss, and rodent traps.
- Select the least toxic chemical application that can accomplish the job.

Businesses/agencies engaged in this activity must comply with Seattle–King County Department of Public Health structural pesticide applicator regulations. The BMPs listed here are intended to complement other regulations.

Washington pesticide law requires most businesses that commercially apply pesticides to the property of another to be licensed as a Commercial Applicator from the Washington State Department of Agriculture.

For more information or assistance contact the King County Stormwater Services at 206–477–4811 and visit *kingcounty.gov/stormwater***.**

A-26 Landscaping Activities and Vegetation Management

Best Management Practices (BMPs) are required by King County Code 9.12. If the BMPs included here are not enough to prevent contamination of stormwater, you will be required to take additional measures.

Required BMPs:

- Train employees on the proper use and application of fertilizers and pesticides.
- Never apply pesticides and fertilizers if it is raining or about to rain.
- Do not apply pesticides within 100 feet of surface waters such as lakes, ponds, wetlands, streams, and stormwater conveyance ditches unless the application is approved and permitted by the Washington State Department of Ecology.
- Determine the proper fertilizer application for the types of soil and vegetation involved. Follow manufacturers' recommendations and label directions.
- Clean up any spills immediately.
- Remove weeds/vegetation in stormwater ditches by hand or other mechanical means and only use chemicals as a last resort.
- Do not blow vegetation or other debris into the storm drain system, sidewalks, or street. Dispose of collected vegetation by recycling or composting.
- Use mulch or other erosion control measures when soils are exposed for more than one week during the dry season or two days during the rainy season.
- Ensure sprinkler systems do not "overspray" vegetated areas resulting in the excess water discharging into the storm drain system.
- New and expanding golf courses must have a Golf Course Management Plan as described in addressed in the *King County Golf Course BMP Manual*

Supplemental BMPs:

- Use integrated pest management (IPM); a comprehensive approach to the use of pesticides is the most effective BMP measure that can be taken for herbicide, insecticide, and fungicide use.
- Test soils to determine the correct fertilizer application rates.
- Use mechanical methods of vegetation removal rather than applying herbicides.
- Use native plants in landscaping. Native plants do not require extensive fertilizer or pesticide applications.

Additional Information:

- Storage of Pesticides and Fertilizers – Activity Sheets A-5
- Natural Yard Care Program:
  http://your.kingcounty.gov/solidwaste/naturalyardcare/watering.asp
- The King County Golf Course BMP Manual.
- The King County Noxious Weed Control Program provides best management practices for the removal of typical noxious weeds such as blackberry and purple loosestrife. Call 206–296–0290 or see: *http://www.kingcounty.gov/environment/animalsandplants/noxious–weeds/weed–control–practices.aspx* for more information.

Washington pesticide law requires most businesses that commercially apply pesticides to the property of another to be licensed as a Commercial Applicator from the Washington State Department of Agriculture.

For more information or assistance contact the King County Stormwater Services at 206–477–4811 and visit *kingcounty.gov/stormwater***.**

A-27 Clearing and Grading of Land for Small Construction Projects

Best Management Practices (BMPs) are required by King County Code 9.12. If the BMPs included here are not enough to prevent contamination of stormwater, you will be required to take additional measures.

Required BMPs:

Contact the King County Department of Design and Environmental Review (DPER) prior to clearing, grading, and preparation activities for construction sites greater than 2,000 square feet. Follow the procedures for construction site erosion and sediment control outlined in the King County Surface Water Design Manual, Appendix D Erosion and Sediment Control Standards.

King County DPER coordinates the clearing, grading, and erosion control requirements on individual sites. The King County Surface Water Design Manual has requirements for erosion and sediment control measures. Appendix D (Erosion and Sediment Control Standards) outlines requirements that all sites must implement. The King County Surface Water Design Manual Appendix C (Small Project Drainage Requirements) addresses small project developments. Even if your site does not require a permit, erosion control measures are still required to prevent turbid water from entering drainage systems or surface waters.

For more information or assistance contact the King County Stormwater Services at 206–477–4811 and visit *kingcounty.gov/stormwater***.**

A-28 Demolition of Buildings

Best Management Practices (BMPs) are required by King County Code 9.12. If the BMPs included here are not enough to prevent contamination of stormwater, you will be required to take additional measures.

Required BMPs:

- Sweep surrounding street gutters, sidewalks, driveways, and other paved surfaces as needed to collect loose debris and garbage. Properly dispose of collected debris and garbage. Do not hose down the area to a storm drain.
- Handle and dispose of all waste materials and demolition debris in a manner that does not cause contamination of stormwater.
- Control dust and fine material using water or dust suppression products, avoiding excessive application to prevent runoff.
- Install catch basin inserts to prevent particles and solids from entering the storm drainage system.
- Inspect and maintain catch basin inserts to ensure they are working correctly.

Additional Information:

- Catch Basin Insert Information Sheet
- Surface Water Design Manual Construction and Erosion BMPs Appendix D

For more information or assistance contact the King County Stormwater Services at 206–477–4811 and visit *kingcounty.gov/stormwater***.**

A-29 Building Repair, Remodeling, and Construction

Best Management Practices (BMPs) are required by King County Code 9.12. If the BMPs included here are not enough to prevent contamination of stormwater, you will be required to take additional measures.

Required BMPs:

- Do not dump any substance, wash water or liquid waste on the pavement or ground.
- Use drop cloths when painting, scraping, and sandblasting and properly dispose of collected material daily.
- Use a drop cloth, drip pan, or tub for activities such as paint mixing and tool cleaning.
- Clean paint brushes and tools covered with water–based paints in sinks connected to sanitary sewers or in portable containers that can be dumped into a sanitary sewer. Brushes and tools covered with non–water–based paints, finishes, or other materials must be cleaned in a manner that enables collection of used solvents (e.g., paint thinner, turpentine, etc.) for recycling or proper disposal. Solvents may not be disposed of to the sanitary sewer. Never dispose of any wash water to a storm drain.
- Use a storm drain cover, filter fabric, or other runoff control mechanism if dust, grit, wash water, or other pollutants may escape the work area. Check runoff control mechanisms daily, and replace as necessary. Drain covers, filter fabric, and other containment devices are commercially available if effective runoff control cannot otherwise be provided.
- Cover trash bins and dumpsters and ensure they are not leaking.
- Follow Appendix D of the King County Surface Water Design Manual, "Erosion and Sediment Control Measures" for dewatering activities.

Required Routine Maintenance:

- Keep spill cleanup materials in a common location on–site. Ensure that employees are familiar with proper spill cleanup procedures.
- Sweep paved areas to collect loose particles for proper disposal. Wipe up spills with rags or other absorbent material immediately. Do not hose down the area to a storm drain.
- Store hazardous materials under cover, using items such as tarps or other temporary cover materials.

Supplemental BMPs:

- Recycle or reuse leftover materials.
- Install catch basin inserts to collect excess sediment and debris if necessary. Inspect and maintain catch basin inserts to ensure they are working correctly.
- Install temporary wheel wash facilities if track out occurs.

Additional Information:

- Concrete pouring – Activity Sheet A 20
- Catch Basin Insert Information Sheet
- See Activity Sheet A-41, "Wheel Wash and Tire Bath Operations."

For more information or assistance contact the King County Stormwater Services at 206–477–4811 and visit *kingcounty.gov/stormwater***.**

A-30 Ship/Boat/Watercraft Building, Maintenance, and Repair

This activity applies to businesses that build, maintain and/or repair boats and ships that are not covered by National Pollutant Discharge Elimination System (NPDES) permit from the Washington State Department of Ecology. This activity also applies to wharves, piers, floats and docks.

Best Management Practices (BMPs) are required by King County Code 9.12. If the BMPs included here are not enough to prevent contamination of stormwater, you will be required to take additional measures

Required BMPs:

- Move maintenance and repair activities onshore if possible.
- Enclose blasting and spray painting activities by deploying tarps to prevent dust and overspray from escaping. Use sanders that have dust containment bags. Collect drips and spills using drop cloths or drip pans.
- Collect bilge and ballast water that has an oily sheen on the surface. Properly dispose of it rather than dumping it in surface waters or on land.
- Perform paint and solvent mixing, fuel mixing, and similar handling of liquids on land to avoid spilling into the water. Clean up spills immediately. Do not wash spills to a storm drain or surface waters.
- Collect and properly dispose of wash water from washing painted boat hulls. Never dispose of wash water containing soap or other chemicals to storm drains or surface waters.
- Cover boat construction and structural repair activities.
- Place a tarp above the water surface underneath the work area on boats or piers to collect drips, spills, paint chips, and loose solids when work is performed over water.
- Recycle all used oil and oil filters.
- Do not use soaps or detergents of any kind to wash the topsides or hulls of boats where the wash water will enter surface waters.

Required Routine Maintenance:

- Store and maintain appropriate spill cleanup materials in a readily accessible location.
- Have a current spill control plan and train all employees on proper spill cleanup procedures.
- Sweep maintenance yard areas, piers, wharves, and boat ramps to collect sandblasting material, paint chips, oils, and other loose debris. Properly dispose of these collected materials. Do not hose down the area to the water or to a storm drain.

Additional Information:

- Disposal Information Sheet
- Ecology's Vehicle and Equipment Washwater Discharges/Best Management Practices Manual (*https://fortress.wa.gov/ecy/publications/summarypages/95056.html*)

For more information or assistance contact the King County Stormwater Services at 206–477–4811 and visit *kingcounty.gov/stormwater*.

A-31 Vehicle and Equipment Parking and Storage

Best Management Practices (BMPs) are required by King County Code 9.12. If the BMPs included here are not enough to prevent contamination of stormwater, you will be required to take additional measures.

Required BMPs:

- Sweep parking lots, storage areas, and driveways as needed to collect dirt, waste, and debris. Do not hose down the area to the storm drainage system.
- Clean up vehicle and equipment fluid drips and spills immediately.
- Place drip pans below inoperative or leaking vehicles and equipment, including employee vehicles.
- Collect and discharge wash water to a sanitary sewer or haul for offsite disposal if washing/pressure washing of the parking lot occurs. There are businesses that will clean parking lots and collect water for off–site disposal. Never drain wash water to the storm drainage system.
- Follow basic sediment controls as outlined in Appendix D ("Erosion and Sediment Control Standards") of the King County Surface Water Design Manual for gravel and dirt lots. These types of parking lots may require additional BMPs to prevent sediment laden water from leaving your site.

Supplemental BMPs:

- Encourage employees to repair leaking personal vehicles.
- Encourage employees to carpool or use public transit through incentives.
- Encourage customers to use public transit by rewarding valid transit pass holders with discounts.
- Install catch basin inserts to collect excess sediment and oil if necessary. Inspect and maintain catch basin inserts to ensure they are working correctly.

Additional Information:

- Disposal Information Sheet
- Catch Basin Insert Information Sheet

For more information or assistance contact the King County Stormwater Services at 206–477–4811 and visit *kingcounty.gov/stormwater*.

A-32 Sidewalk Maintenance

Best Management Practices (BMPs) are required by King County Code 9.12. If the BMPs included here are not enough to prevent contamination of stormwater, you will be required to take additional measures.

Required BMPs:

- Sweep sidewalks as needed to collect loose dirt and debris rather than blowing or pushing it into the street or gutter or hosing it down. Collected materials must be disposed of as solid waste.
- Clean individual stains instead of washing the entire sidewalk if possible.
- Collect wash water and dispose of into the sanitary sewer or take off site for appropriate disposal if soaps or other cleaners are used. If only water is used, install a catch basin insert or filter cloth in order to collect all solids and debris.
- Use a minimum amount of sand or deicing salts and sweep up any remaining granules when the snow and ice have melted.

Additional Information:

- Disposal Information Sheet
- Storage of Liquid Materials in Portable Containers – See Activity Sheet A-3
- Containment Information Sheet

For more information or assistance contact the King County Stormwater Services at 206–477–4811 and visit *kingcounty.gov/stormwater***.**

A-33 Swimming Pool and Spa Cleaning and Maintenance

These BMPs apply to pools, spas, hot tubs, and fountains that use chemicals and/or that are heated.

Best Management Practices are required by King County Code 9.12. If the BMPs included here are not enough to prevent contamination of stormwater, you will be required to take additional measures.

Required Operational BMPs:

- Clean the pool, spa, hot tub, or fountain regularly, maintain proper chlorine levels and maintain water filtration and circulation. Doing so will limit the need to drain the facility.
- Manage pH and water hardness to reduce copper pipe corrosion that can stain the facility and pollute receiving waters.
- Before using copper algaecides, try less toxic alternatives. Only use copper algaecides if the others alternative do not work. Ask a pool/spa/hot tub/fountain maintenance service or store for help resolving persistent algae problems without using copper algaecides.
- Develop and regularly update a facility maintenance plan that follows all discharge requirements.
- Dispose of unwanted chemicals properly. Many of them are hazardous wastes when discarded.
- Store pool chemicals under cover and in enclosed containers.

Required Water Disposal BMPs:

All pools and spas regulated by the Seattle–King County Department of Public Health must be connected to the sanitary sewer for draining, pool wash water and filter backwash. If the pool or spa does not have a permanent drain connection, then water must be pumped or drained to the sanitary sewer or meet the following BMPs.

There are several options for discharging pool and spa water: drain to the sanitary sewer, have it hauled offsite for disposal at an approved location, infiltrate to the ground, or drain to the stormwater drainage system under the conditions listed below.

- When a sanitary sewer is not available for discharge, pool and spa water may be discharged to the ground to infiltrate or to the stormwater drainage system if all of the following conditions are met:
  - » No copper–based algaecides were used;
  - » The water must be tested to determine chlorine levels and pH;
  - » The water is dechlorinated to 0.10 ppm Chlorine or less, using neutralizing chemicals or by letting the pool or spa "sit" long enough to reduce the chlorine level to the allowable limit. The pool or spa must not be used during this period;
  - » The pH is neutral (6–8);
  - » Free of any coloration, dirt, suds, or algae.
  - » Free of any filter media.
  - » Free of acid cleaning wastes.
  - » Released at a rate that does not cause erosion either onsite or in the drainage system; and
  - » At ambient temperature.

- Where there is no sanitary sewer and it is not possible to discharge the pool or spa water to the ground, a professional pool–draining service must be hired to collect all water for off–site disposal at an approved location.
- Diatomaceous earth (commonly used as a filtering agent) and water from back flushing filter systems cannot be discharged to surface waters, storm drainage systems, septic systems, or the ground. Dispose of diatomaceous earth filter material as solid waste.
- Do not discharge pool or spa water to a septic system, as it is prohibited and may cause the system to fail.
- The discharge of pool and spa filter backwash or cleaning water to the ground, surface waters or the storm drainage system is not allowed.

For more information or assistance contact the King County Stormwater Services at 206–477–4811 and visit *kingcounty.gov/stormwater***.**

A-34 Keeping Animals in Controlled Areas

This activity applies to kennels and catteries, fenced pens and exercise areas that do not involve livestock. For livestock BMPs see Activity Sheet A-35.

Best Management Practices (BMPs) are required by King County Code 9.12. If the BMPs included here are not enough to prevent contamination of stormwater, you will be required to take additional measures.

Required BMPs:

- Make sure there is vegetative cover or some other type of ground cover such as mulch if animals are kept in unpaved and uncovered areas in order to prevent erosion.
- Install covered waste receptacles and provide waste collection service at designated dog exercise areas.

Required Routine Maintenance:

- Sweep and clean areas where animals are kept, and collect and dispose of droppings, uneaten food, and other stray particles.
- Regularly remove droppings in designated dog exercise areas.
- When washing down kennels and paved areas either collect and dispose of the water to the sewer system or infiltrate into grass or gravel. Do not hose down the area to the storm drainage system.

Supplemental BMPs:

- Specially designed septic systems for kennels are commercially available and are recommended if the above BMPs are not adequate.

For more information or assistance contact the King County Stormwater Services at 206–477–4811 and visit *kingcounty.gov/stormwater***.**

A-35 Keeping Livestock in Stables, Pens, Pastures, or Fields

This activity applies to management of all types of livestock, including cows, horses, and other hoofed animals.

Best Management Practices are required by King County Code 9.12. If the BMPs included here are not enough to prevent contamination of stormwater, you will be required to take additional measures.

Required Best Management Practices (BMPs):

- Horse and livestock wash areas may not be plumbed or flow to the storm drain system. Wash water must be discharged to the sanitary sewer, septic system or infiltrate into the ground.
- Locate manure piles such that runoff does not flow to the storm drain system or to nearby waterways or wetlands.
- Implement BMPs and specific requirements in accordance with King County Code 21A.30 for livestock management. If BMPs are implemented in accordance with the livestock management code, additional BMPs will not be necessary unless they are not adequate to protect King County surface waters.

Technical Assistance:

King Conservation District

The King Conservation District can provide technical assistance for stormwater pollution control efforts related to the keeping of livestock. Personnel are available for site visits and prepare farm management plans to assist in compliance with the stormwater code.

1107 SW Grady Way, Suite 130
Renton, WA 98057
Telephone: 425–282–1900
Email: *district@kingcd.org*
http://www.kingcd.org/ *http://www.kingcd.org/*

Washington State University Cooperative Extension – King County

The Extension Service offers a variety of educational services designed to promote sensitivity to water quality concerns in relation to agricultural production, livestock management, and small farms.

WSU Cooperative Extension–King County

919 SW Grady Way Ste 120
Renton, WA 98055
Telephone: (206) 205–3100
http://king.wsu.edu/

Horses for Clean Water

Horses for Clean Water offers environmentally sensitive horse keeping education on manure management, pasture management, mowing, composting, and what equipment to use.

7235 Southside Blvd
Nampa, ID 83686
Phone: 206–909–0225
http://www.horsesforcleanwater.com

A-36 Logging and Log Yards

This covers logging activities that fall under the classification of Class IV General Forest Practices – where timber harvesting is done in the process of converting forest lands into other land uses, such as forest cutting for construction of homes.

Best Management Practices (BMPs) are required by King County Code 9.12. If the BMPs included here are not enough to prevent contamination of stormwater, you will be required to take additional measures.

Required BMPs:

- Comply with King County Critical Areas Ordinance requirements for logging near streams, wetlands, and other sensitive areas, and the King County Surface Water Design Manual requirements for the clearing and grading of sites.
- Apply for coverage under the State Department of Ecology's National Pollutant Discharge Elimination System (NPDES) baseline general permit.

For more information or assistance contact the King County Stormwater Services at 206–477–4811 and visit *kingcounty.gov/stormwater***.**

A-37 Mining and Quarrying of Sand, Gravel, and Other Materials

This activity applies to surface excavation and on–site storage of sand, gravel, minerals, peat, clay, rock, and other materials that are mined in unincorporated King County.

Best Management Practices (BMPs) are required by King County Code 9.12. If the BMPs included here are not enough to prevent contamination of stormwater, you will be required to take additional measures.

Required BMPs:

- Obtain a National Pollutant Discharge Elimination System (NPDES) Sand and Gravel General Permit for Sand and Gravel Operations, Rock Quarries, and Similar Mining Facilities.
- Obtain a grading permit from King County Department of Permitting and Environmental Review (DPER).
- Comply with King County Clearing and Grading Ordinance (KC Code 16.82). If the DPER grading permit conditions do not adequately protect surface and groundwater, additional BMPs will be required under KC Code 9.12, Water Quality.
- Maintain stormwater facilities per King County Stormwater Ordinance (KC Code 9.04).
- Control sediment and erodible materials on site to prevent track–out on to road right of ways and from entering the stormdrain system.
- Control dust as per Activity A-44.

For more information or assistance contact the King County Stormwater Services at 206–477–4811 and visit *kingcounty.gov/stormwater***.**

A-38 Well, Utility, Directional and Geotechnical Drilling

This activity applies drilling water wells and utilities, environmental protection and monitoring wells, and geotechnical borings that use machinery in the drilling. It does not apply to the use of devices such as hand augers.

Best Management Practices (BMPs) are required by King County Code 9.12. If the BMPs included here are not enough to prevent contamination of stormwater, you will be required to take additional measures.

Required Best Management Practices:

- Obtain permits for drilling activities, and for clearing and grading the access routes and the work site. Contact the King County Department of Permitting and Environmental Review for more information.
- Determine if environmentally sensitive areas (streams, wetlands, erosion hazards, and landslide hazards) are within the area of influence of the work site. For horizontal directional drilling, take measures to ensure drilling fluids are not leaking.
- Mitigate potential impacts to surrounding areas and/or the storm drainage system. The driller must be equipped to quickly respond to unusual conditions that may arise.
- Locate and prepare access roadways to minimize the amount of excavation and the potential for erosion. See the King County Surface Water Design Manual for information on vehicle access preparation and maintenance and erosion control measures.
- Contain accumulated water and sediment on–site and direct through a geotextile filtration system (or equivalent system) before discharging to the surrounding ground surface. Keep all sediment–laden water out of storm drains and surface waters. If sediment–laden water does escape from the immediate drilling location, block flow to any nearby waterways or catch basins using fabric, inlet protections, sand bags, erosion fences, or other similar methods.
- Divert any concentrated flows of water into the site using sandbags or check dams up–slope from the site.
- Dispose of soil cuttings and accumulated sediment appropriately. If cuttings or other soils disturbed in the drilling process are to be temporarily stockpiled on–site, they must be covered and surrounded by a berm or filter device.
- Stabilize exposed soils at the end of the job, using mulch or other erosion control measures.

Additional Information:

- Storage of Soil, Sand, Salt, and Other Erodible Materials – Activity Sheet A-4
- Containment Information Sheet
- Disposal Information Sheet

A-39 Roof Vents and Fugitive Emissions

This activity applies to processes that vent emissions to the roof and/or the accumulation of pollutants on your roof. Processes of special concern are stone cutting, metal grinding, spray painting, paint stripping, galvanizing and electroplating.

Best Management Practices (BMPs) are required by King County Code 9.12. If the BMPs included here are not enough to prevent contamination of stormwater, you will be required to take additional measures.

Required BMPs:

- Identify processes that are vented and may contribute pollutants to the roof. Pollutants of concern include and are not limited to: metal dust, grease from food preparation, solvents, hydrocarbon, fines, and stone dust.
- Install appropriate source control measures such as air pollution control equipment (filters, scrubbers, and other treatment) and/or institute operational or process changes.
- If proper installation and maintenance of air pollution control equipment does not prevent pollutant fallout on your roof, additional treatment of the roof runoff may be necessary. Install/provide appropriate devices for roof runoff before it is discharged off site. This may include approved water quality treatment BMPs or structural stormwater treatment systems.

Required Routine Maintenance:

- Maintain air filters and pollution control equipment on a regular basis to ensure they are working properly. (If you smell odors from outside the building, the pollution control equipment may need maintenance or evaluation.)
- When cleaning accumulated emissions from roof tops, collect the washwater and loose materials using a sump pump, wet vacuum or similar device. Discharge the collected runoff to the sanitary sewer or have a waste disposal company remove it.

Additional Information:

- Water quality treatment Information Sheet
- Disposal Information Sheet

Contact Puget Sound Clean Air Agency and/or the Washington State Department of Ecology (Ecology) for air pollution control regulations. If your activities are permitted by either of these agencies, these requirements are supplemental. Additionally, if you are covered under an Ecology National Pollutant Discharge Elimination System (NPDES) Industrial Permit, and sampling for specific parameters is required, these BMPs may assist you in attaining your permit conditions.

A-40 Street Deicing Operations

This activity applies to deicing and anti–icing operations on streets and highways to control ice and snow.

Best Management Practices (BMPs) are required by King County Code 9.12. If the BMPs included here are not enough to prevent contamination of stormwater, you will be required to take additional measures.

Required BMPs:

- Select deicers and anti–icing materials such as sand, calcium chloride, magnesium acetate, potassium acetate, or similar materials that cause less adverse environmental impact than urea, and sodium chloride.
- Apply only as needed using minimum quantities. Adhere to manufacturers and industry standards of use and application.
- Store de/anti–icing materials (except for sand) in an impervious containment area to keep the material from entering storm or natural drainage systems. Maintain sand piles so that sand cannot wash into the storm drain system.
- Transfer liquid de/anti–icing materials in the containment area or use a drip pan under the hose connection.
- Sweep/clean up accumulated de/anti–icing materials and grit from roads as soon as possible after the road surface clears.
- Minimize use in areas where runoff or spray from the roadway immediately enters sensitive areas such as fish–bearing streams.

Supplemental BMPs:

- Intensify roadway cleaning in early spring to help remove particulates from road surfaces.
- Switch products to one with a lower amount of metals.

Additional Information:

For more information or assistance contact the King County Stormwater Services at 206–477–4811 and visit *kingcounty.gov/stormwater***.**

A-41 Wheel Wash and Tire Bath Track Out Control

This activity applies to commercial and industrial operations where materials may be tracked off the property. If a rocked construction–type entrance for unpaved site, or routine sweeping/vacuuming of paved site, does not control mud and sediment track out; a wheel wash system must be installed.

Best Management Practices (BMPs) are required by King County Code 9.12. If the BMPs included here are not enough to prevent contamination of stormwater, you will be required to take additional measures.

Required Best Management Practices (BMPs):

- Install a portable wheel wash system

  OR

- Permanent wheel wash system as described in Appendix D, Chapter D.3.4.3 of the King County Surface Water Design Manual

Required Routine Maintenance:

- Change water as necessary. Dispose of wheel wash water to appropriate disposal location.
- Maintain the appropriate level of water per design.

Additional Information:

For more information or assistance contact the King County Stormwater Services at 206–477–4811 and visit *kingcounty.gov/stormwater***.**

A-42 Potable Water Line Flushing, Water Tank Maintenance and Hydrant Testing

Chemicals used in line flushing and tank maintenance are highly toxic to aquatic organisms and can degrade receiving waters

Best Management Practices (BMPs) are required by King County Code 9.12. If the BMPs included here are not enough to prevent contamination of stormwater, you will be required to take additional measures.

Required BMPs:

- Discharge water to the sanitary sewer if super chlorination or chemical treatment is used as part of flushing. If sanitary sewer is not available, the water may be infiltrated to the ground as long as it is dechlorinated to a total residual chlorine concentration of 0.1 ppm or less and water quality standards are met, a diffuser is used to prevent erosion, and the water does not cross property lines.
- Discharging water (chlorinated or dechlorinated) to a stormwater drainage system requires approval from King County Water and Land Resources (WLRD). The water must be dechlorinated to a total residual chlorine concentration of 0.1 ppm or less and pH adjusted if necessary. Water must be volumetrically and velocity controlled to prevent resuspension of sediments in the MS4. Contact WLRD for approval.

Additional Information:

For more information or assistance contact the King County Stormwater Services at 206–477–4811 and visit *kingcounty.gov/stormwater***.**

A-44 Dust Control for Commercial Operations

This activity applies to existing manufacturing and commercial operations as opposed to new construction or land development. Material handling activities may include concrete crushing, cement mixing, commercial composting, stone grinding, and wood milling.

Best Management Practices (BMPs) are required by King County Code 9.12. If the BMPs included here are not enough to prevent contamination of stormwater, you will be required to take additional measures.

Required BMPs:

- Sweep paved areas where dust and erodible materials accumulate. Use vacuum sweepers to minimize generation of airborne dust and for more efficient dust removal.
- Clean equipment and vehicles that leave the property to prevent dust and track out of material. Create a designated wash area to collect and properly dispose of the wash water. Never wash down equipment or vehicles to the storm drainage system.
- Train employees in the proper operating procedures to minimize dust accumulation.

Supplemental BMPs–if the Above are Not Sufficient:

- Use dust filtration and collection systems such as bag house filters.
- Use water spray to flush dust accumulations to an approved treatment system or the sanitary sewer where available and allowed by the local sewer authority and the King County Industrial Waste Program.
- Use approved dust suppressants such as those listed in the King County Surface Water Design Manual, Appendix D, Erosion and Sediment Control Standards.
- When pH levels in stormwater rise above 8.5, the pH must be adjusted to the acceptable range of 6.5 to 8.5. Refer to the King County Surface Water Design Manual Appendix D Sections D.2.2.7 and D.2.2.8 for information on pH adjustment.

Additional Information:

- Department of Ecology Publication "Techniques for Dust Prevention and Suppression," #96–433. Please note that not all dust suppressants are appropriate for use near storm drainage systems or surface waters.
- Contact Puget Sound Clean Air Agency and/or the Washington State Department of Ecology for air pollution control regulations.

For more information or assistance contact the King County Stormwater Services at 206–477–4811 and visit *kingcounty.gov/stormwater***.**

A-45 Maintenance of Public and Private Utility Corridors and Facilities

This covers maintenance activities associated with the transmission and distribution of public and private utilities such as petroleum products, natural gas, water, sewage, and electrical power. This includes the maintenance of underground utility vaults, pump stations, and similar facilities.

Best Management Practices (BMPs) are required by King County Code 9.12.

If the BMPs included here are not enough to prevent contamination of stormwater, you will be required to take additional measures.

Required BMPs:

- Minimize the amount of herbicides and other pesticides used to maintain access roads and facilities.
- Stabilize access roads or areas of bare ground with gravel, crushed rock, or another method to prevent erosion. Use and manage vegetation to minimize bare ground/soils that may be susceptible to erosion.
- Provide stormwater drainage for roads and maintenance areas. Grade roads with a crown or slope to minimize the potential for erosion from runoff. Provide ditches, swales, and culverts to convey stormwater runoff.
- Keep ditches and culverts clear to reduce the possibility of the drainage becoming plugged or blocked, causing overflows and erosion.
- Check utility vaults or other underground structures for oil prior to pumping out any collected water. Contaminated water must be collected for proper disposal. Small amounts of oil may be captured with absorbent material. Never discharge contaminated water, including high or low pH, to storm drainage facilities or surface waters.
- When removing water and/or sediment from electrical transformer vaults, determine from records or testing if the transformers contain PCBs.
- Clean up any debris or spilled material immediately after completing maintenance and repair activities.

Additional Information:

- Landscaping Activities and Vegetation Management – Activity Sheet A-26
- Erosion and Sediment Control Standards – King County Surface Water Design Manual, Appendix D
- Work in public road right of ways requires permission from King County Utility Inspection Program (206) 296–8122.

A-46 Color Events

Color events are charity, religious, or commercial events that involve the use of powdered and/or liquid dyes. Because they typically occur outside, there is a high likelihood of the color material entering storm drain systems and surface water unless measures are taken to prevent these illicit discharges from occurring.

Best Management Practices (BMPs) are required by King County Code 9.12. If the BMPs included here are not enough to prevent contamination of stormwater, you will be required to take additional measures.

Pre–event BMPs:

- Call King County Stormwater Services at (206) 477–4811 and ask to speak to a Water Quality Engineer for specific approval requirements and to arrange a pre–event site visit and/or consultation. Every event will have site specific stormwater considerations.
- Create a map of your event that includes the following: event route; nearby streams, lakes and ponds; start and finish areas; color application stations, and the storm drain inlets at the color application, start and finish areas.
- Create a Pollution Prevention Plan that details the measures taken to ensure that NO dye material, either during or after the event, will enter the storm drain system and how it will all be removed and disposed of. The plan must address what will happen in the event of rain.
- Contract with a commercial street cleaning firm to clean paved surfaces. Have a storm drain cleaning contractor on–call for discharges to storm drains or emergency clean–up if necessary.
- Request a copy of the dye product's MSDS (Material Safety Data Sheet) from the manufacturer or supplier. Review MSDS for potential safety and environmental hazards.
- Provide copies of the map, pollution prevention plan, commercial cleaning contract, dye MSDSs, and the names and contact information of the event officials for both during and after the event to the local stormwater agency. This information shall be submitted at least 3 weeks prior to the event.

Preventing Runoff Fom Entering Storm Drain Systems and Water Bodies:

- Protect storm drains by using berms and covering the drains with tarps or catch basin covers.
- Prohibit participants from throwing dye within 100 feet of any stream, ditch or water body.
- Set up color stations at least 100 feet away from any stream, ditch or water body.
- The route, start, finish, and color application stations must be at least 100' away from any permeable pavement or the permeable pavement must be completely covered.

Event Clean–up BMPs:

- Dry off tarps and stained wet pavement with towels or absorbent pads.
- Use brooms or street sweepers to clean up paved areas.
- Do not use blowers to move dye material.
- Do not use hoses or pressure washers to rinse excess dye off of tarps, sidewalks or paved areas.
- If it becomes necessary to use water to clean surfaces, all the water must be collected and disposed of to the sanitary sewer system, with approval from the local sewer agency.
- Call King County Stormwater Services immediately (24/7) if any colored water enters a storm drain or water body.
- All litter and debris must be picked up and properly disposed of.

"Biodegradable" and "non–toxic" do NOT mean that a substance can go into storm drains or water bodies. The dye material can harm aquatic organisms by altering water quality and chemistry. State and Federal environmental laws require local jurisdictions to prohibit non–stormwater discharges to storm drains. Dye material and any wash water are prohibited discharges.

For more information or assistance contact the King County Stormwater Services at 206–477–4811 and visit *kingcounty.gov/stormwater***.**

A-47 Older Fueling Operations

These BMPs apply to the fueling of vehicles and equipment, including gas stations and fuel pumps to service equipment or vehicles, where the fuel pumps were installed prior to July 1995. For new or remodeled fueling areas installed after July 1995, see Activity Sheet A-17 Fueling Operations. For mobile fueling operations see A-48 Mobile Fueling of Vehicles and Heavy Equipment. For farm and agricultural operations with above ground fuel tanks, refer to Activity Sheet A-2 Outdoor Storage of Liquid Materials in Stationary Tanks

Best Management Practices (BMPs) are required by King County Code 9.12. If the BMPs included here are not enough to prevent contamination of stormwater, you will be required to take additional measures.

Required BMPs (Permanent Sites):

- Pave and contain the fueling area with Portland cement concrete with a sill or berm raised to a minimum of four inches to prevent the runoff of spilled liquids and to prevent run–on of stormwater from the surrounding area. Raised sills are not required at the open–grate trenches that connect to an approved drainage–control system.
- Cover (roof) the fueling area or in lieu of covering the fueling area (if the fuel pumps were installed prior to July 1995):
    - Maintain spill materials and drip pans at all times next to the fueling area; and
    - For non–retail fueling operations, post a sign stating that a drip pan must be used during fueling and that all spills and drip must be cleaned up immediately.
    - **Should subsequent inspections find evidence of spilled fuel on the ground or stormwater contamination, then the fueling area must be covered.**
- Convey stormwater collected on the fuel island containment pad to a sanitary sewer system, if approved by the sanitary authority; or to an approved treatment system such as an oil/water separator. Discharges from treatment systems to storm drains or surface water or to the ground must not display ongoing or recurring visible sheen and must not contain oil and grease.
- Alternatively, collect stormwater from the fuel island containment pad and hold for proper off–site disposal.
- Use drip pans or absorbent pads under all hose connections to capture drips or spills during fuel transfers.
- Post signs stating not to top off the fuel tank when filling. Post signs that ban customers and employees from changing engine oil or other fluids at that location.
- Prepare an emergency spill response and cleanup plan and have designated trained person(s) available either on site or on call at all times to promptly and properly implement that plan and immediately cleanup all spills.

Required Routine Maintenance (Permanent Sites):

- Store and maintain appropriate spill cleanup materials in a location known to all.
- Ensure that employees are familiar with the site's spill control plan and proper spill cleanup procedures.
- Sweep or vacuum fueling area as needed. Never hose down the fueling area to the storm drains.

Supplemental BMPs:

- Use absorbent materials in or around storm drain inlets on the property to filter oily runoff. Used materials containing oil must be picked up by a qualified disposal contractor.
- Install a catch basin insert configured for oil removal. The oil absorbent filter media must retain absorbed oil during future storm events.

Additional Information:

- Covering Information Sheet
- Containment Information Sheet
- Oil/Water Separators Information Sheet and Surface Water Design Manual
- Catch Basin Inserts – Information Sheet and the King County Surface Water Design Manual.
- Spill Response and Clean–up Plan Information Sheet

For more information or assistance contact the King County Stormwater Services at 206–477–4811 and visit *kingcounty.gov/stormwater***.**

A-48 Mobile Fueling of Vehicles and Heavy Equipment

Mobile fueling, also known as fleet fueling, wet fueling, or wet hosing, is the practice of filling fuel tanks of vehicles or equipment by fuel tank trucks, tank trailers, and trucks with accessory fueling tanks that are driven to the yards or sites where the vehicles to be fueled are located.

Required Operational BMPs:

- Obtain approval from the local fire department. Comply with local and Washington State fire codes.
- The driver/operator must be present and constantly observe the fuel transfer to ensure the implementation of the following procedures at all fuel transfer locations:
  - » To the extent practical, locate the point of fueling at least 25 feet from the nearest stormdrain or drainage ditch, or inside an impervious containment with a volumetric holding capacity equal to or greater than 110 percent of the fueling tank volume, or covering the stormdrain to prevent discharge of spilled or leaked fuel. Covers are not required for storm drains that convey the inflow to a spill control separator approved by the local jurisdiction and the fire department;
  - » Place a leak–proof drip pan or an absorbent pad under each fueling location prior to and during all dispensing operations. The pan or the absorbent pad must have a capacity of at least 5 gallons. There is no need to report spills retained in the drip pan or the pad;
  - » Manage the handling and operation of fuel transfer hoses and nozzle, drip pan(s), and absorbent pads as needed to prevent spills/leaks of fuel from reaching the ground, stormdrain, or surface waters;
  - » Do not extend fueling hoses across a traffic lane without fluorescent traffic cones, or equivalent devices, conspicuously placed to block all traffic from crossing the fuel hose;
  - » Remove the fill nozzle and cease filling the tank when the automatic shut–off valve engages. Do not lock automatic shutoff fueling nozzles in the open position;
  - » Do not "top off" the fuel tanks; and
  - » Do not use dispersants or soap to clean up spills or sheens.
- Develop and follow a mobile fueling plan that includes the required operational BMPs and spill response procedures.
- The responsible manager shall:
  - » Sign and date the mobile fueling plan;
  - » Distribute procedures to the operators; and
  - » Update and retain them in the organization files
- Immediately notify the local fire department (911) and Ecology in the event of any spill entering surface or ground waters. Establish a "call down list" to ensure the rapid and proper notification of management and government officials should any significant amount of product be lost off–site. Keep the list in a protected but readily accessible location in the mobile fueling truck. The "call down list" should also pre–identify spill response contractors available in the area to ensure the rapid removal of significant product spillage into the environment.

- Train the driver/operator upon hiring, and annually thereafter, on proper fueling procedures, spill prevention, cleanup measures, and emergency procedures. Make all employees aware of the significant liability associated with fuel spills.
- The driver/operator of the fueling vehicle must have:
  - » A current copy of the mobile fueling plan;
  - » Adequate flashlights or other mobile lighting to view fuel fill openings with poor accessibility; and
  - » Two–way communication with the operator's home base.
- Maintain a minimum of the following spill clean–up materials in all fueling vehicles, that are readily available for use:
  - » Non–water absorbents capable of absorbing at least 15 gallons of diesel fuel;
  - » A storm drain plug or cover kit
  - » Two, five–gallon buckets with lids or sealable disposal bags;
  - » A non–spark generating shovel; and
  - » For fuel tankers and trailers with fueling tanks greater than 100 gallons, a non–water absorbent containment boom, minimum 10 feet in length with a 12–gallon minimum absorbent capacity.
- Use automatic shutoff nozzles for dispensing the fuel. Replace automatic shut–off nozzles as recommended by the manufacturer.
- Maintain fueling equipment, particularly hoses and nozzles.
- Use an adequate lighting system at the filling point.

Additional Information:

- Spill Response and Clean–up Plan Information Sheet

For more information or assistance contact the King County Stormwater Services at 206–477–4811 and visit *kingcounty.gov/stormwater*.

CHAPTER 4

RESIDENTIAL BMPS

INTRODUCTION

This chapter consists of a series of BMPs that are required for single family residential activities in unincorporated King County. They address typical household activities that have the potential to pollute stormwater, surface waters, and groundwater.

Even small amounts of commonly used household products such as motor oil, pesticides, paint waste, and soaps are harmful to aquatic life. Although individual activities may appear insignificant, runoff from urban areas is now a leading cause of water pollution in rivers, lakes, and coastal areas.

King County's goal is to reduce pollution by educating homeowners and residents to prevent the contamination of stormwater runoff and our streams, rivers, lakes, and groundwater.

For commercial activities occurring on single family residential properties, the BMPs in Chapter 3 must be implemented in order to protect stormwater quality. This includes home occupations that have an outdoor component such as guest or employee parking areas or outdoor storage.

Containing:

- R-1 Residential Automobile and Boat Washing
- R-2 Residential Storage of Solid and Food Wastes
- R-3 Residential Automobile Repair and Maintenance
- R-4 Residential Hazardous Waste Use, Storage, and Disposal
- R-5 Residential Gardening and Lawn Care
- R-6 Residential Maintenance and Repairs
- R-7 Residential Swimming Pool and Hot Tub Maintenance

R-1 Residential Automobile and Boat Washing

This applies to washing automobiles or boats at your house.

Best Management Practices (BMPs) are required by King County Code 9.12. If the BMPs included here are not enough to prevent contamination of stormwater, you will be required to take additional measures.

Automobile washing is one of the most common residential activities that pollute surface waters, streams, creeks, lakes, and Puget Sound. The soaps and detergents used to wash automobiles can be more of a pollution threat than the grime washed off the automobiles. Even soaps that are labeled "biodegradable," "environmentally friendly" or "nontoxic" are harmful to aquatic life and water quality. The "nontoxic" label simply means the soap is less toxic to humans.

The most environmentally responsible thing to do is to take your vehicle to a commercial car wash where wash water is recycled and discharged to the sanitary sewer.

Required BMPs:

- When washing vehicles or boats, use a mild detergent or soap that is pH neutral. Washing may only be done in an area that allows for infiltration of the wash water, such as gravel, grass, or loose soil.
- Never clean or pressure wash the engine or undercarriage of your automobile at home. The pollutants from this activity can contaminate your property or well water.
- Flush any remaining soapy water in your wash bucket down the toilet or pour it down the sink.
- If you wash on a paved area such as your driveway and use soaps or detergents, you must do ONE of the following:
- Redirect the wash water to vegetated areas such as the lawn using temporary measures such as a berm, boom/socks, or other solid materials like a piece of lumber placed at the low point of where your vehicle is parked. This will redirect the flow of water.

  OR

- Use a wet vacuum to collect the wash water and then dispose of the water in your sink or toilet for treatment at your local sewage treatment plant.

Tips:

- Use a hose nozzle with a trigger and shut it off when you're not using it to conserve water.
- There are several waterless car wash products on the market. Cloths, rags, etc. used with these products should be disposed of as solid waste.
- Do not take your car to a "charity car wash" unless you can see that the wash water is being collected and discharged to the sewer system. When in doubt, ask.

For more information or assistance contact the King County Stormwater Services at 206–477–4811 and visit *kingcounty.gov/stormwater.*

R-2 Storage of Solid and Food Wastes AKA Garbage

Best Management Practices (BMPs) are required by King County Code 9.12. If the BMPs included here are not enough to prevent contamination of stormwater, you will be required to take additional measures.

Leaking garbage cans, waste containers without lids, scrap piles, and junk vehicles and equipment can cause polluted runoff from your property to drain to surface and groundwater. Accumulated garbage can attract rodents, rats, mosquitoes, and other pests that are also health hazards.

Required BMPs:

- Keep garbage, recyclables, and food wastes in covered or lidded containers.
- Dispose of waste, using a curbside pick–up service or take it to a solid waste transfer station.
- Do not let garbage accumulate.

Tips:

- Recycle as much as possible.
- The King County Industrial Materials Exchange (IMEX) at 206–296–4899 or *imex@kingcounty.gov*. *govlink.org/hazwaste/business/imex*.
- King County Online Materials Exchange: *http://your.kingcounty.gov/solidwaste/exchange/*.
- King County Solid Waste Division waste disposal information: *http://your.kingcounty.gov/solidwaste/index.asp*.
- Household hazardous waste disposal: *www.govlink.org/hazwaste/house*, or contact the Hazards Line at 206–296–4692. See Activity Sheet R–4, "Residential Hazardous Waste Use, Storage, and Disposal."
- Composting yard and kitchen waste: *http://your.kingcounty.gov/solidwaste/composting/index.asp*.
- Yard waste collection: *http://your.kingcounty.gov/solidwaste/garbage–recycling/yardwaste.asp*.
- Dispose of pet waste in your garbage; bury it in your yard (not in vegetable gardens); or, dispose of in sanitary sewer systems. See *http://your.kingcounty.gov/solidwaste/composting/petwaste.asp*

For more information or assistance contact the King County Stormwater Services at 206–477–4811 and visit *kingcounty.gov/stormwater.*

R-3 Residential Automobile Repair and Maintenance

Best Management Practices (BMPs) are required by King County Code 9.12. If the BMPs included here are not enough to prevent contamination of stormwater, you will be required to take additional measures.

Many people repair and maintain their vehicles at home. These activities cannot pollute streams, rivers, and lakes. Keeping your vehicle from leaking oil or other fluids is an important pollution prevention measure.

Required BMPs:

- Collect all used oil, antifreeze, or other vehicle fluids in containers with tight fitting lids. Do not mix these fluids in the same container.
- Recycle oil at an auto parts store or service station. Oil and other fluids can be disposed of at a household hazardous waste collection site. Call the household hazardous waste line at 206–296–4692 or see *govlink.org/hazwaste/house/products/list.cfm* for recycling and disposal information and locations. Never dispose of any fluids or waste materials into a storm drain, ditch, or onto the ground.
- Never clean the engine or undercarriage of your vehicle at home. For this type of cleaning, take the vehicle to a commercial car wash facility.
- Use drip pans, tarps, or even cardboard and newspaper under the vehicle to capture leaks or spills that may occur during maintenance and repair activities. This ensures spilled fluids won't be washed to the storm drainage system.
- Clean up spills with rags or absorbent material, such as sand, dirt, or cat litter. Do not wash down or hose down these spills to the curbs, roadway, or storm drains. Sweep up absorbents and dispose of them in your garbage can.
- Store used batteries under cover and off the ground or inside until they can be recycled.

Tips:

- Take your vehicle to a commercial car repair facility where fluids are handled, recycled and disposed of correctly to avoid pollutants being introduced to our local water bodies.

For more information or assistance contact the King County Stormwater Services at 206–477–4811 and visit *kingcounty.gov/stormwater.*

R-4 Residential Hazardous Waste Use, Storage, and Disposal

There are a variety of hazardous materials routinely used in and around our homes including chemical cleaners, pesticides, paints, solvents, lighter fluid, gasoline, antifreeze, brake fluid and other automotive products, wood preservatives and even batteries from our electronic equipment.

Best Management Practices (BMPs) are required by King County Code 9.12. If the BMPs included here are not enough to prevent contamination of stormwater, you will be required to take additional measures.

Improper disposal and failure to keep hazardous products from rainwater contact may cause surface and groundwater pollution. With so many hazardous compounds present in thousands of households in King County, the cumulative adverse effects of poor usage, storage and disposal practices are potentially severe to our environmental health.

Required BMPs:

- Store all hazardous materials inside a building or shed or under cover. Do not expose hazardous materials to rainwater.
- Use products only as specified on labeling directions.
- Dispose of and recycle hazardous wastes through the Household Hazardous Waste Program or other recycling programs or businesses, or carefully follow disposal directions on containers of chemicals. There are three fixed hazardous waste collection sites for household hazardous waste in Seattle and King County. In addition, the Wastemobile travels to different areas of King County throughout the year. See *govlink.org/hazwaste/house* or call the Household Hazards Line at 206–296–4692 for more information.
- Never discharge or dump hazardous chemicals into storm drainage systems or on to the ground.

Tips:

- Reuse and recycle as much as possible. The King County Industrial Materials Exchange (IMEX) is a good resource for finding uses for your left over materials. Call IMEX at 206–296–4899 or send an e–mail to *imex@kingcounty.gov*. Consult the IMEX Web site for more information, at *http://www.govlink.org/hazwaste/business/imex*.
- Use the least toxic product available. See *http://www.govlink.org/hazwaste/house/alternatives* for information on finding alternatives to hazardous household products.

For more information or assistance contact the King County Stormwater Services at 206–477–4811 and visit *kingcounty.gov/stormwater.*

R-5 Residential Gardening and Lawn Care

Best Management Practices (BMPs) are required by King County Code 9.12. If the BMPs included here are not enough to prevent contamination of stormwater, you will be required to take additional measures.

Many pollutants can enter stormwater systems, groundwater, and water bodies as a result of typical lawn and gardening work. Runoff contaminated by pesticides and fertilizers can severely degrade streams and lakes and adversely affect fish and other aquatic life.

Some gardening chemicals are also harmful to children and pets. Disposal of grass clippings and other vegetation into water bodies leads to decreased oxygen levels that can be lethal to fish and other aquatic life. In addition, disposal of leaf litter and other debris to the storm drain system can clog drainage pipes, leading to street flooding and increased maintenance costs.

Required BMPs:

- Never apply herbicides, insecticides, rodenticides, or fungicides near water or when it is raining.
- Manually or mechanically remove weeds and other pests rather than using pesticides near water.
- Store all bags or piles of fertilizers and containers of pesticides in a covered location such as a garden shed.
- Do not sweep or dump grass clippings, leaves, or twigs into any street, drainage ditch, or stormwater facility or pond.
- Store piles of erodible materials on lawns or other pervious areas. If these materials are stored on impervious areas such as driveways, cover them with a tarp so they are not washed into storm drains or ditches.
- Do not blow or sweep leaf litter and other debris into the street or drainage system. Instead, collect and either compost it or dispose as yard waste.
- Control lawn and garden watering so that no runoff leaves your property. Check automatic sprinkler systems to ensure there is no overspray to driveways and sidewalks that drain to storm drainage systems.

Tips:

- Use as little pesticide as possible and always follow the label directions for application. Try pest control measures that do not require chemicals first. See *http://govlink.org/hazwaste/house/yard/problems*.
- Compost your yard waste, or use it as mulch in your yard or garden. Contact your local solid waste utility to see if yard waste pickup service is available. See *http://your.kingcounty.gov/solidwaste/garbage–recycling/yardwaste.asp*.
- Learn about alternatives to chemical pesticides and fertilizers. Contact the Local Hazardous Waste Management Program at 206–296–4692, or visit *http://www.govlink.org/hazwaste/house/yard*.
- Avoid planting species on the Noxious Weeds list. For assistance or questions contact King County's Noxious Weed Program at 206–296–1900.

For more information or assistance contact the King County Stormwater Services at 206–477–4811 and visit *kingcounty.gov/stormwater.*

R-6 Residential Maintenance and Repair

Best Management Practices (BMPs) are required by King County Code 9.12. If the BMPs included here are not enough to prevent contamination of stormwater, you will be required to take additional measures.

There are a variety of home maintenance and repair activities routinely carried out by homeowners in King County that have the potential to can adversely affect our streams, rivers, and lakes. Pollutants generated from these activities can affect whether a water body is swimmable or fishable.

Required BMPs:

- Do not dispose of wastewater into the street, gutter, storm drain, or drainage ditch, or into a stream, creek, or any other body of water.
- **Painting:** Do not dispose of wash water from cleaning brushes, paint rollers, paint buckets, or containers to surface water, storm drains, or ditches. Wash water from latex paints can be disposed of to the sanitary sewer. Empty containers of latex paint can be left open to dry out any residual paint, and then disposed of in your normal garbage or taken to a transfer station for disposal. Residual oil based paint, paint thinners, and solvents must be disposed of as hazardous waste.
- See *http://www.govlink.org/hazwaste/house/products/list.cfm* and *http://www.govlink.org/hazwaste/publications/Paint_CommonWastes.pdf* for information on the proper disposal of paint and solvent waste.
- **Pressure Washing**: Water from pressure washing decks, driveways, roofs, or other hard surfaces may contain suspended solids and other pollutants that should not be directly discharged to drainage systems. Redirect pressure washing wastewater to vegetated areas or areas such as gravel, lawns, landscaping, or bare soil where the water will infiltrate slowly into the ground. If this cannot be accomplished, filter the wash water through filter fabric, or other filtering media to collect the suspended solids before discharging the water to a drainage system. If any chemicals are used during the pressure washing process, the wastewater must be collected and disposed of in a sanitary sewer system or infiltrated on site. If moss control or another chemical treatment is used during pressure washing of roofs, disconnect the downspouts so the chemicals do not discharge to the storm drainage system, and disperse the wash water onto adjacent lawns and landscaping.
- **Carpet Cleaning:** Most commercial carpet cleaners have onboard wastewater recycling systems. If you do your own carpet cleaning, the wash water must be discharged to the sanitary sewer or your septic system. Filter the water if it contains lint or other particles to avoid clogging the drains. If you prefer not to discharge the water to your septic system, you may also discharge the water to your lawn or a landscaped area to allow the wash water to infiltrate slowly into the ground. Be aware that detergents and other cleaning chemicals such as solvents can be harmful to vegetation and septic systems. Discharging wash water to the ground may not be allowed if you live in a Critical Aquifer Recharge Area (CARA). Never dispose of carpet cleaning wash water to a storm drain, drainage ditch, or surface water. Carpet cleaning wastewater contains chemicals, detergents, and suspended solids that adversely impact the quality of surface and ground waters.
- **Cement/Concrete Work:** Concrete/cement wash water has a pH level that is toxic to aquatic life. Do not allow wash water from concrete work to discharge into storm drainage systems, including small yard drains or adjacent roadways. This is especially important when installing washed aggregate driveways or patios. Direct the wash water to vegetated areas or dig a hole where the wash water can settle and infiltrate slowly into the ground. The cement residue can be mixed into the soil where the wash water is infiltrated with no detrimental effects, and the pH will be neutralized.

Tips:

- Hire a professional home maintenance and repair company that follows the approved BMPs for home repair and maintenance, as adopted by King County. If you have questions about which Best Management Practices a business must comply with contact King County Water and Land Resources at 206–477–4811 or see *http://www.kingcounty.gov/environment/waterandland/stormwater.aspx*.
- Remember, as a homeowner, you have a responsibility to ensure your contractors follow the required Best Management Practices. As part of your agreement with contractors, require them to follow all King County Codes and regulations.

For more information or assistance contact the King County Stormwater Services at 206–477–4811 and visit *kingcounty.gov/stormwater*.

R-7 Residential Swimming Pool and Hot Tub Maintenance

Best Management Practices (BMPs) are required by King County Code 9.12. If the BMPs included here are not enough to prevent contamination of stormwater, you will be required to take additional measures.

Improper drainage or discharge of water from swimming pools, hot tubs, or spas to storm drains or ditches during maintenance activities can lead to pollution of streams, rivers, and lakes. Chemicals used in pool, spa, and hot tub maintenance can contaminate stormwater and surface water if they are not stored, used, and disposed of correctly.

Required Operational BMPs:

- Clean the pool, spa, hot tub, or fountain regularly, maintain proper chlorine levels and maintain water filtration and circulation. Doing so will limit the need to drain the facility.
- Manage pH and water hardness to reduce copper pipe corrosion that can stain the facility and pollute receiving waters.
- Before using copper algaecides, try less toxic alternatives. Only use copper algaecides if the others alternative do not work. Ask a pool/spa/hot tub/fountain maintenance service or store for help resolving persistent algae problems without using copper algaecides.
- Develop and regularly update a facility maintenance plan that follows all discharge requirements.
- Dispose of unwanted chemicals properly. Many of them are hazardous wastes when discarded.
- Store pool chemicals under cover and in enclosed containers.

Required Water Disposal BMPs:

If the pool or spa does not have a permanent drain connection, then water must be pumped or drained to the sanitary sewer or meet the following BMPs.

There are several options for discharging pool and spa water: drain to the sanitary sewer, have it hauled offsite for disposal at an approved location, infiltrate to the ground, or drain to the stormwater drainage system under the conditions listed below.

- When a sanitary sewer is not available for discharge, pool and spa water may be discharged to the ground to infiltrate or to the stormwater drainage system if all of the following conditions are met:
  - » No copper–based algaecides were used;
  - » The water must be tested to determine chlorine levels and pH;
  - » The water is dechlorinated to 0.10 ppm Chlorine or less, using neutralizing chemicals or by letting the pool or spa "sit" long enough to reduce the chlorine level to the allowable limit. The pool or spa must not be used during this period;
  - » The pH is neutral (6–8);
  - » Free of any coloration, dirt, suds, or algae.

  - » Free of any filter media.
  - » Free of acid cleaning wastes.
  - » Released at a rate that does not cause erosion either onsite or in the drainage system; and
  - » At ambient temperature.

- Where there is no sanitary sewer and it is not possible to discharge the pool or spa water to the ground, a professional pool–draining service must be hired to collect all water for off–site disposal at an approved location.
- Diatomaceous earth (commonly used as a filtering agent) and water from backflushing filter systems cannot be discharged to surface waters, storm drainage systems, septic systems, or the ground. Dispose of diatomaceous earth filter material as solid waste.
- Do not discharge pool or spa water to a septic system, as it is prohibited and may cause the system to fail.
- The discharge of pool and spa filter backwash or cleaning water to the ground, surface waters or the storm drainage system is not allowed.

Tips:

Hire a professional maintenance company to service your pool, hot tub or spa.

For more information or assistance contact the King County Stormwater Services at 206–477–4811 and visit *kingcounty.gov/stormwater.*

CHAPTER 5

INFORMATION SHEETS

This chapter provides additional information on how to implement BMPs for certain commercial and residential activities.

Containing:

- Catch Basin Inserts
- Containment
- Controlling and Collecting Contaminated Runoff
- Covering
- Disposal
- Drainage Maintenance Contractors
- Oil/Water Separator
- Spill Response and Cleanup Plan
- Water Quality Treatment BMPs

Catch Basin Inserts

INFORMATION SHEET

A catch basin insert is a device installed in a storm drain to provide water quality treatment through filtration or absorption.

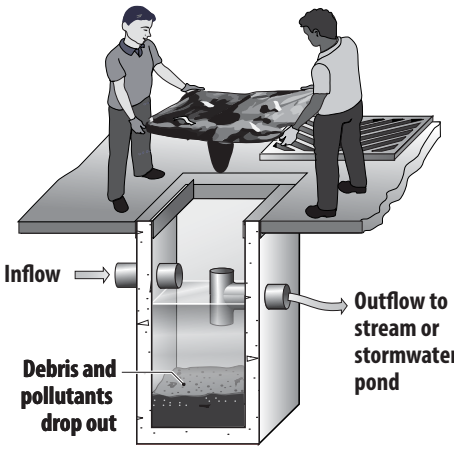

TWO PEOPLE LIFTING INSERT

Catch basin inserts fit into existing catch basins and are configured to remove one or more of the following contaminants: coarse sediment, oil and grease, and litter and debris. Some units may be able to remove dissolved pollutants and pollutants associated with fine sediments. When selecting an insert, ensure that your specific pollutant–removal needs are met. As with any treatment BMP, catch basin inserts should never be used in place of source control practices.

Oil and Grease Removal: Inserts designed for the removal of oil and grease contain, and depend on, oil–absorbing media. The King County Surface Water Design Manual (SWDM) requires specific materials/media to be used in catch basin inserts to ensure oils are not re–released during storm flows. These inserts are appropriate for use in any area in which vehicles are used, maintained or stored. Because of the small storage capacity of these inserts, they are not acceptable as the sole line of defense against actual oil spills in areas where large amounts of oil could be released. Large amounts of sediment entering the catch basin significantly reduce the effectiveness and longevity of the oil absorbing media. Under these conditions, an oil/water separator with a pre–settling chamber may be more appropriate.

Sediment Removal: Inserts designed for sediment removal may be used at construction sites and in situations where stockpiles or unpaved areas are likely to contribute high sediment loads. They may also be appropriate for small (low traffic) businesses. They are not considered a substitute for other source control BMPs.

Debris Removal: Inserts can also be used for the removal of litter and debris, particularly leaf and tree material.

Design and Maintenance

Unlike most other treatment BMPs, which must be designed and constructed specifically for your site, catch basin inserts may be purchased directly from a vendor and installed by the user. While standardized insert units are available, most vendors are able to customize their systems for your site. Before purchasing a catch basin insert, the following factors must be considered.

Conveyance Capacity: The conveyance capacity refers to the amount of water that the insert can pass without causing flooding. This capacity is equal to the amount of water that is able to pass through the insert's treatment area, plus the amount that can pass through the built–in overflow. Over time, the treatment area begins to clog and the total conveyance capacity is reduced. If maintenance is neglected or if an unusually high amount of sediment or debris is captured by the insert, the treatment capacity may drop to zero and all of the water will have to drain through the overflow (routine inspections help prevent

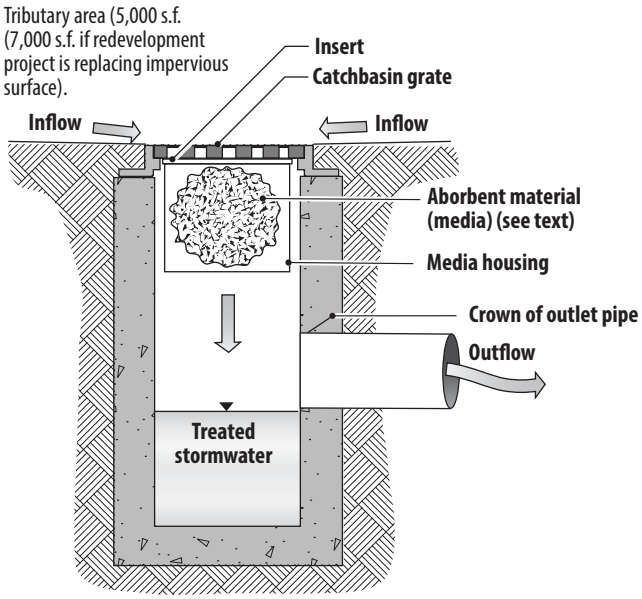

SECTION VIEW (not to scale)

The typical design of a catch basin insert is a set of filters that are specifically chosen to address the pollutants expected at that site (source: King County, WA, 2000)

this problem). In order to minimize the chance of flooding, the insert should function as designed and be able to handle flow from the area draining to the catch basin. The vendor should be able to tell you what the conveyance capacity is. Don't allow employees to poke holes in the insert to drain flooded areas.

Treatment Capacity and Bypass: The treatment capacity refers to the amount of stormwater that the insert unit will pass through its treatment area. The insert unit should be sized to ensure that most of the water entering the drain inlet is treated even as the treatment area starts to clog. The ability of the insert to remove pollutants will be reduced if water is able to seep between the storm drain grate and the edge of the pavement. Ensure that this gap is sealed. The vendor should provide you with information on how to prevent this situation and information on the treatment capacity of the system.

Maximum Weight: The maximum weight of the insert/filter will be equal to the weight of the insert/unit when new, plus the weight of the sediment and water trapped in the unit. Under the most extreme cases, the treatment area of the insert/unit may become completely clogged, and the unit may be full of water when it comes time to service it. It is essential the maximum weight of the insert be less than what can be lifted by the people or equipment to be used during maintenance. Before ordering a system, or having a system customized to your site, be sure the vendor knows how you will be removing the insert/unit for maintenance.

Maintenance: Since the installation of one or more catch basin inserts represents a long–term commitment to maintenance, it is important that the unit selected be easy to use and maintain, and that it is built to last. Be sure to have the vendor provide a complete demonstration of the product at your site, and if possible, ask to try an insert before committing to its purchase. ***Catch basin inserts are ineffective without adequate maintenance***.

Frequent inspection of the insert is necessary. Actual maintenance will generally consist of removing the insert from the catch basin, emptying accumulated sediments, cleaning or replacing the filter media (if applicable), and re–installing the insert. In most cases these materials may be disposed of as regular solid waste, however, media used for oil and grease removal may require special treatment. See the Disposal Information Sheet for more information.

Maintenance frequency will vary depending on the site and on the amount and type of pollutant targeted for removal. All units should be inspected every one to two weeks (except during periods of dry weather), and complete maintenance performed whenever necessary. The simplest way to determine whether the units need maintenance is to inspect them during a rain storm and see whether water is exiting the overflow.

Performance Problem	Conditions When Maintenance or Replacement is Needed	Results Expected When Maintenance is Performed
Sediment Accumulation	When sediment forms a cap over the insert media of the insert and/or unit.	No sediment cap on the insert media and its unit.
Trash and Debris Accumulation	Trash and debris accumulates on insert unit creating a blockage/restriction.	Trash and debris removed from insert unit. Runoff freely flows into catch basin.
Media Insert Not Removing Oil	Effluent water from media insert has a visible sheen.	Effluent water is free of oils and has no visible sheen.
Media Insert Water Saturated	Catch basin insert is saturated with water and no longer has the capacity to absorb.	Effluent water is free of oils and has no visible sheen
Media Insert–Oil Saturated	Media oil saturated due to petroleum spill that drains into catch basin.	Effluent water is free of oils and has no visible sheen
Media Insert Use Beyond Normal Product Life	Media has been used beyond the typical average life of media insert product.	Effluent water is free of oils and has no visible sheen

King County Wastewater Division – Industrial Waste Program
(206) 263–3000
www.kingcounty.gov/environment/wastewater/IndustrialWaste

King County Business Waste Line
(206) 263–8899
www.govlink.org/hazwaste/

King County Surface Water Design Manual
http://www.kingcounty.gov/environment/waterandland/stormwater

Containment

INFORMATION SHEET

Containment refers to methods to prevent material from leaving or entering a specific area. Containment is an effective means for preventing uncontaminated stormwater from flowing into or onto a contaminated activity area. It is also critical for containing spills in activity areas where pollutants may be present.

The term "secondary containment" means the specific requirement for all chemical liquids, fluids, petroleum products and hazardous wastes stored on–site, to be in a containment area sized to hold a volume of 110 percent of the volume of the largest container or 10% of the volume of all the containers, whichever is greater. Secondary containment may be achieved with specially designed containment pallets, concrete curbing, or earthen berms, depending on the nature and amount of the material, activities on site, and site–specific conditions.

- Use separate secondary containers for products and wastes that are incompatible, e.g. acids and bases.
- Make sure the construction materials and containers are compatible with products or wastes stored.

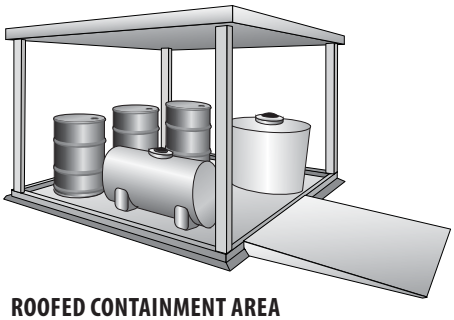

ROOFED CONTAINMENT AREA

Activity areas contained by a curb, berm, or dike (to prevent stormwater run–on) should be covered. This will stop precipitation from ponding inside the secondary containment area. In some instances, run–on prevention can be accomplished by placing a curb or berm on the upslope sides of the area. Elevating the activity or storing materials on a platform can also prevent stormwater run–on.

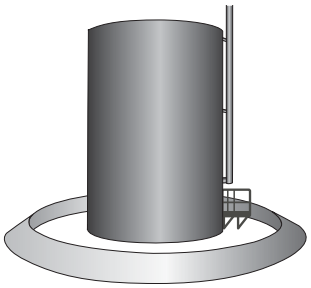

BIG OUTDOOR TANK WITH DIKE

If not covered, containment areas will allow rainwater to accumulate. Contaminated water cannot be drained from the containment area to storm drains or surface waters, or infiltrated into the ground. The water must be collected and disposed of either in a sanitary sewer, a stormwater treatment system, or at a licensed decant facility. During the wet season, secondary containment without cover can lead to frequent disposal of relatively clean water that can be costly. For more detailed information on uncovered containment areas, see the Controlling and Collecting Contaminated Runoff Information Sheet

If containing stockpiles of erodible material, a dike, berm, or filtering device must be placed on at least three sides to act as a barrier or filter to treat runoff and to remove suspended solids. If the containment device is three–sided, the open side should not be on the upslope or the downslope side of the stockpile. The dike or filter can be made of hay bales, silt fencing (filter fabric), concrete curbing, ecology blocks, compacted earth with grass planted on it, or similarly effective materials. Timbers treated with creosote or other preservatives should not be used because they can leach contaminants into runoff. All filter materials used around stockpiles must be maintained to work effectively and must be replaced when necessary (see Appendix D of the Surface Water Design Manual for other options.

SIMPLE CONTAINMENT DEVICES (UNCOVERED)

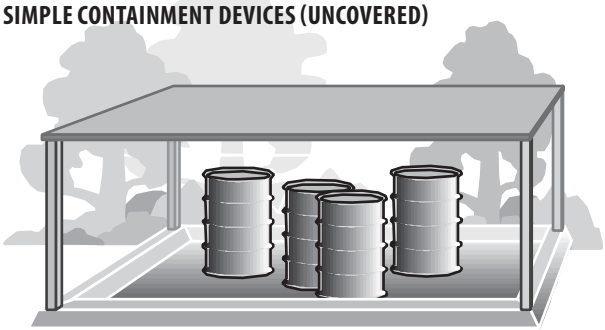

CONTAINMENT DIKE

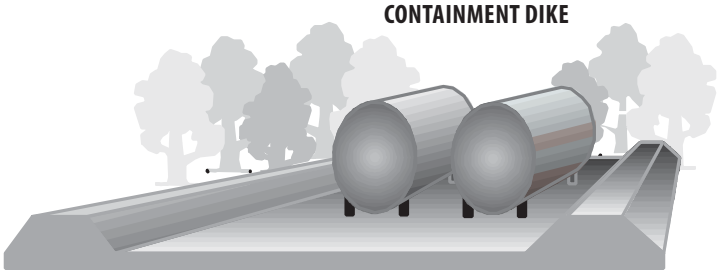

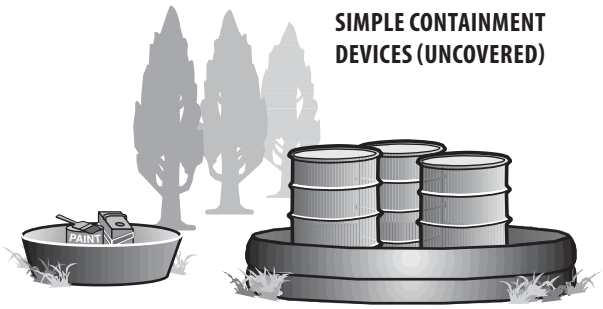

For storing small items, a tub or wading pool is an acceptable containment structure. A rubber or plastic wading pool may be sufficient for containment of some stored materials that do not require much space, such as storing remodeling or painting materials, or temporary storage of wastes in drums.

These small storage devices should also be covered to prevent rain from accumulating. You must also consider the type of materials stored to ensure adverse chemical reactions do not occur with the containment material.

Regular maintenance of containment devices is essential for proper functioning. Commercial products are available that combine containment boxes with elevated pedestals. They prevent stormwater run–on by elevating containers of liquids off the ground and collecting spills and drips inside the pedestal box.

Local Sewer Agency

The name and phone number is identified on your water and sewer bill.

King County Wastewater Division – Industrial Waste Program

(206) 263–3000
www.kingcounty.gov/environment/wastewater/IndustrialWaste

King County Business Waste Line

(206) 263–8899
www.govlink.org/hazwaste/

King County Stormwater Services & Surface Water Design Manual

(206) 477–4811
www.kingcounty.gov/stormwater

Controlling and Collecting Contaminated Runoff

INFORMATION SHEET

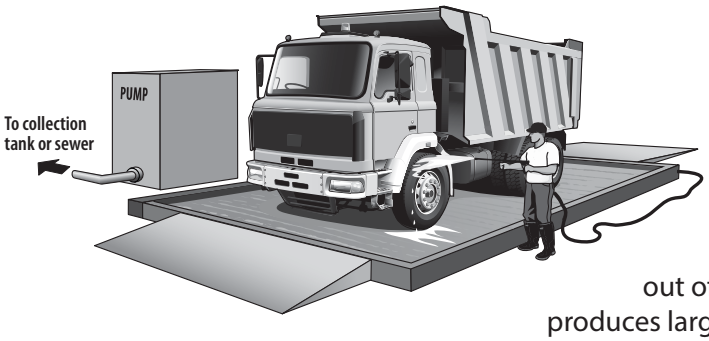

This BMP applies to activities that cannot be covered effectively yet require a method of controlling and containing contaminated runoff. It is particularly suited to activities with the potential for spills and leaks, but that otherwise do not generate excessive amounts of polluted runoff or that are intermittent such as washing or cleaning operations. A sump or holding tank can provide containment until the liquids can be pumped out of the tank and disposed of properly. If the activity produces large amounts of runoff or wastewater, this BMP will not be effective because contaminated water will overflow the sump or pass through the sump before collection and disposal are possible. A designated area must be paved and sloped to a drain connected to a central collection point. A sump, vault, or holding tank must be installed to capture the wastewater. Some materials, such as gasoline, can react with and cause deterioration of asphalt pavement. It is preferable for the area to be paved with Portland cement concrete. If the area is already paved with asphalt, an asphalt sealant should be applied to the pavement surface. Whatever material is used, the paved surface must be free of gaps and cracks.

The sump or holding tank should have a large enough capacity to contain the entire volume of wastewater or potential spill generated by the activity. Depending on the circumstances, the sump or tank can be equipped with an outflow pipe to allow discharge of uncontaminated runoff to the storm drainage system, along with a shutoff valve to prevent outflows in the case of a spill. The local sewer authority may, in some instances, allow a connection to the sanitary sewer system.

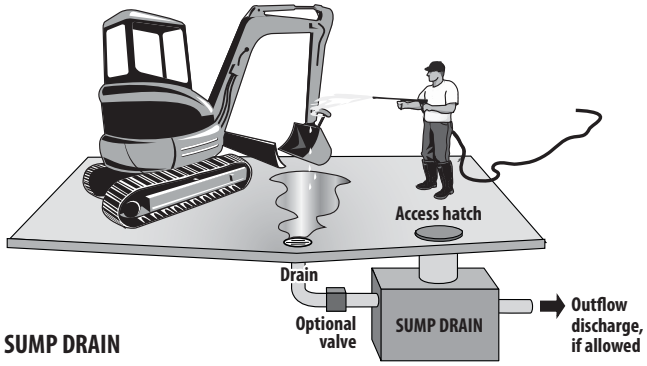

SUMP DRAIN

The paved activity area must also be contained to prevent stormwater run–on and runoff. Curbs, dikes, or berms direct uncontaminated runoff away from the area so that only the precipitation falling within the activity area is discharged (and/or treated) along with the process water. See the Containment Information Sheet for more information.

The catch basin/tank/sump must have a two–way valve installed at the outflow pipe so that uncontaminated runoff can flow to the storm drainage system when the pollutant–generating activity is not occurring. The two–way valve must easily switch between discharges to the sanitary sewer, holding tank, or treatment facility, and discharges to the storm drainage system. When the activity is occurring, the two–way valve must be set so the polluted runoff discharges to the sanitary sewer, holding tank, or treatment system. After the pollutant–generating activity operation is finished and no more process water is generated, the area must be washed down so that the wash water discharges to the sanitary sewer, holding tank, or treatment facility. The two–way valve must be switched after clean–up is completed so that subsequent runoff is discharged to the storm drainage system until the activity resumes. It is critical this valve is always switched to the correct position. Just as contaminated stormwater cannot be discharged to the storm drain system, uncontaminated stormwater cannot be discharged to the sanitary sewer.

Approval for discharges with a two–way valve should be obtained from the King County Industrial Waste Program, the local sewer authority and King County Water and Land Resources Division, Water Quality Compliance Unit.

If discharges to the storm drainage system or sanitary sewer are not allowed, the sump or holding tank contents must be pumped out periodically and disposed of properly. This requirement can make this BMP costly, especially during the wet season. See the Disposal Information Sheet for disposal options. To keep disposal costs down, use

AREA SLOPED WITH COLLECTION

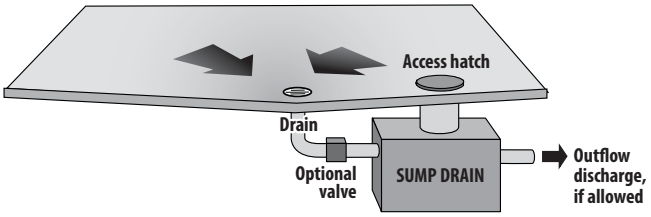

PAVED AREA WITH SUMP DRAIN

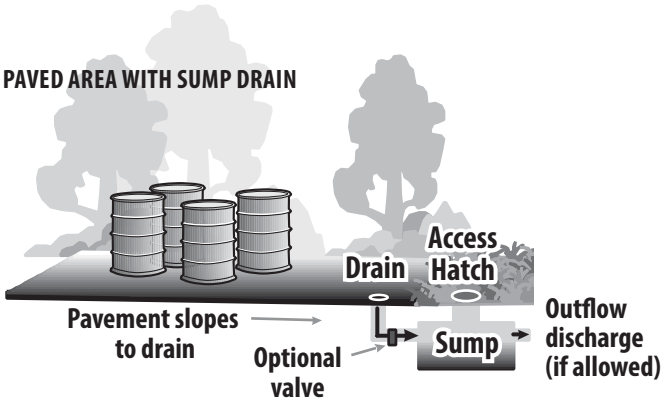

a drain cover, plug, or shutoff valve in the pipe leading to the sump when the activity is not occurring. Before starting the activity (if the activity is intermittent), open the cover, plug, or valve.

Constructing a sump and disposing of accumulated contents can be expensive, so businesses should consider other BMP alternatives. Your local sewer agency may charge additional fees for a sanitary sewer hookup. The fees depend on location, quantity of discharge, and whether the hookup is for a business or residence. A King County industrial waste discharge permit may also be required.

Several commercial services are available for pumping out sumps and holding tanks. Information on these services can be found on the King County Stormwater Services website at *www.kingcounty.gov/stormwater* and the Drainage Maintenance Contractors Information Sheet. Septage hauling contractors may not be used for this type of service.

Local Sewer Agency

The name and phone number is identified on your water and sewer bill.

King County Wastewater Division – Industrial Waste Program

(206) 477–5300
www.kingcounty.gov/environment/wastewater/IndustrialWaste

King County Business Waste Line

(206) 263–8899
www.govlink.org/hazwaste/

Covering

INFORMATION SHEET

Covering potential pollutant–generating activities and materials is one of the most effective ways to prevent stormwater contamination. All of the options must be combined with a method to prevent run–on of stormwater into piles and runoff of any liquids that might leave the pile. See the Containment Information Sheet for more information.

The first step is reviewing what materials are stored outside and what activities are conducted outside that could cause pollutants to get on the ground.

Does the activity need to be conducted outside? Does the material need to be stored outside? Is there a suitable indoor location for these activities?

1. How often does the activity occur?
2. How often is the material used?
3. Can any of the material or equipment be removed if it is no longer needed?
4. Is it feasible to tarp materials or is a permanent structure needed?

Tarps

Many materials, such as stockpiles of erodible materials or storage of drums, can be by covered with a heavy plastic tarp made of impermeable material. Weights such as bricks, tires, or sandbags must be used to anchor the cover in place. Care should be taken to ensure that the tarp covers the stored materials completely and that stormwater does not penetrate the cover. If several tarps are used to form a cover, they should be tethered together or overlapped. If necessary, pins or stakes should be used to anchor the tarps to the ground. The tarp/cover will be easier to keep in place and will last longer if some form of wind protection is used or stockpiles are located in areas protected from the wind. The tarps must be in place when the material is not being used and inspected weekly to ensure that no holes or gaps are present.

TARP COVERING

Roofs & Awnings

The other option for covering is a roof. The roof cover option used depends on the site layout, available space, affordability, and limitations imposed by other regulations. The area of the roof should be sufficient to keep the contents underneath dry. The storage/activity area must be designed to prevent stormwater run–on into the covered area. Examples of various protective structures are shown below.

Permanent structures may require a permit and must comply with all applicable building and fire codes. Contact the King County Department of Permitting and Environmental Review for information on permits and code requirements for a roof structure.

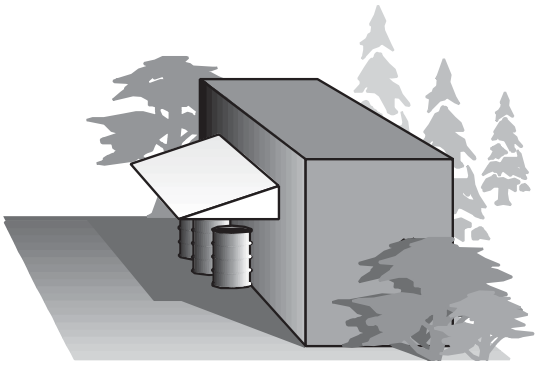

OVERHANGING AWNING

LEAN–TO STRUCTURE

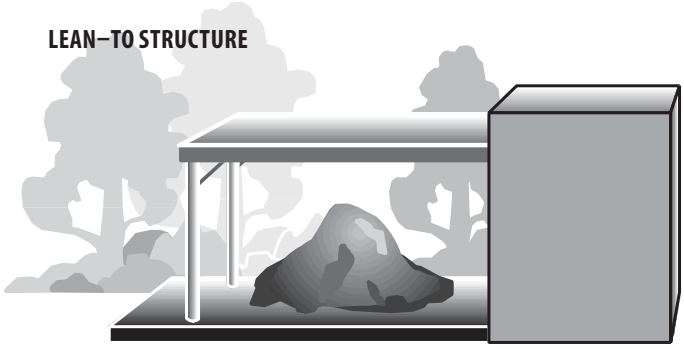

STAND–ALONE CANOPY

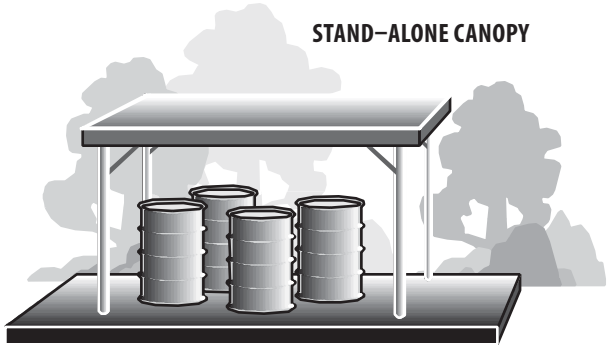

Storage Sheds

There are also numerous prefabricated storage sheds that may be effective. Before purchasing these structures, ensure they meet applicable building and fire codes.

ISLAND-TYPE OVERHANGING ROOF

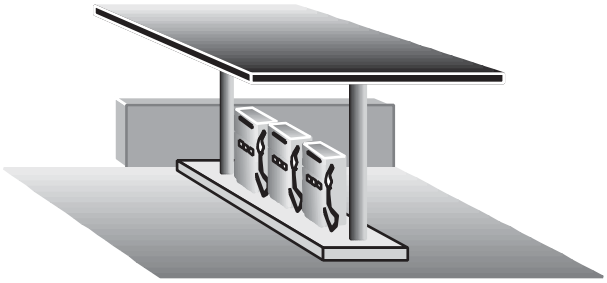

Another option for covering is to use an overhanging awning large enough to prevent precipitation from reaching the contents underneath. This does not include awnings already in place over a public right–of–way such as a sidewalk in front of a store, as this area is not suitable for storage or business activities. Many of the building permit, fire code, and zoning code requirements mentioned above apply to these structures.

Activities such as fueling operations must covered by an island–type roof. This roof is supported by columns along the center of the structure rather than at the corners, allowing vehicular traffic underneath while still providing protection from precipitation. Refer to BMP Activity Sheet A-48 for new fueling facility requirements.

King County Department of Planning and Environmental Review

Land Use, Fire Code, and Building Code Requirements

(206) 296–6600
www.kingcounty.gov/property/permits

Disposal

All solid and liquid wastes and contaminated stormwater in King County must be disposed of properly. There are generally five options for disposal depending on the types and quantity of materials. These options are: (1) sanitary sewer system, (2) septic system, (3) municipal solid waste disposal facilities, (4) recycling, and (5) offsite waste transportation and disposal services. Ordinary stormwater runoff is not considered to be contaminated but stormwater that is mixed with concentrated wastes requires special disposal, as discussed below.

Discharge to Sanitary Sewer System

Wastewater generated by commercial and industrial processes (depending on the nature of the wastewater) may be put into the sanitary sewer, subject to approval by the local sewer authority and the King County Industrial Waste Program. It may be necessary to pretreat the wastewater in order to remove pollutants. Sewer fees may be collected on such discharges. The local sewer authority and King County must be contacted prior to the installation of any permanent connection to the sanitary sewer.

Process wastewater may be recycled on–site as an alternative to discharge to the sanitary sewer. There are numerous products on the market that are designed to recycle wash water.

It is not an option to discharge stormwater to the sanitary sewer in place of implementing adequate best management practices to prevent contamination.

Local Sewer Agency

Contact your local sewer agency for information on allowable discharges and the location of your side sewer. The name of your local sewer agency is identified on your water and sewer bill.

King County Wastewater Division – Industrial Waste Program

The Industrial Waste Program provides information on what can be discharged to the sanitary sewer. Industrial Waste can also assist with information regarding the rerouting of illicit storm water connections/discharges.

(206) 263–3000
www.kingcounty.gov/environment/wastewater/IndustrialWaste

Discharge to Septic System

If your site is not serviced by a sanitary sewer system, you probably have a septic system. Only waste that is comparable to residential sewage may be disposed of into septic systems. Hazardous chemicals and process wastewater cannot be disposed of into septic systems. Furthermore, the septic system must be designed to accommodate the volume of wastewater generated. Any changes in waste volume and constituency from those which existed when the system was permitted must be approved by Public Health – Seattle & King County. Stormwater, whether contaminated or not, may not be disposed of in septic systems. Animal waste may not be disposed of in a septic system unless specifically designed for this purpose.

Public Health – Seattle & King County – Wastewater Program

Information regarding on–site sewage treatment systems (septic systems) is available for both property owners and septic system professionals.

(206) 296–4932
www.kingcounty.gov/healthservices/health/ehs/wastewater.aspxRecycling

Municipal Solid Waste Disposal Facilities

Municipal solid waste disposal facilities are designed to handle solid wastes. They do not accept liquid wastes. Hazardous and dangerous wastes and many liquid wastes must be properly transported and disposed of at an appropriate offsite facility. Contact your local solid waste disposal facility or contact King County Solid Waste Division to find out how to dispose of garbage and other materials.

King County Solid Waste Division

The Solid Waste Division (SWD) provides garbage transfer, disposal and recycling services for residents and businesses in all of King County, except for Seattle and Milton. SWD also provides household hazardous waste disposal options and recycling education programs for its residents.

(206) 477–4466
www.kingcounty.gov/solidwaste/index.asp

King County Business Waste Line

The Business Waste Line answers questions from small businesses on the proper disposal of oil, antifreeze, and other hazardous wastes. The Waste Line may also be used to report complaints and hazardous waste violations.

(206) 263–8899
www.govlink.org/hazwaste/

Hazardous Waste Onsite Consultation Program

The Onsite Consultation Program provides free visits to businesses that request assistance with hazardous waste handling and waste reduction. Only small quantity generators of hazardous wastes (or businesses that are potentially small quantity generators) qualify for this service.

206–263–8899
www.govlink.org/hazwaste/Seattle

Recycling

Recycling facilities are recommended for many commercial items, including used oils, used batteries, a variety of used auto parts, scrap metal, solvents, paints, and other solid wastes. There are a number of private businesses that accept materials for recycling. There is also an Industrial Material Exchange clearinghouse which facilitates the transfer of unwanted materials from the generator to another business that can use them.

King County Solid Waste Division – Workplace Recycling Program

This program assists businesses with recycling by: 1) providing information on waste reduction and recycling services for particular needs; 2) helping you work with your employees to promote participation; 3) offering information on buying recycled products; and 4) providing you with ongoing support to ensure your program is successful.

(206) 477–4466
http://your.kingcounty.gov/solidwaste/business/index.asp

Industrial Materials Exchange (IMEX)

IMEX provides a free service helping businesses with surplus materials to find businesses that need them. Surplus or waste materials, such as solvents, paint, plastics, and wood, are exchanged. The website lists materials available and materials wanted. IMEX is a component of the Local Hazardous Waste Management Program.

(206) 263–8465
www.lhwmp.org/home/IMEX/index.aspx

Offsite Waste Transportation and Disposal Services

Depending on the nature of the waste, it may not be possible to dispose of it in the sewer or municipal landfill. The Seattle–King County Department of Public Health's Waste Characterization Program serves hazardous waste generators in Seattle and King County. Information supplied by the generator on questionable wastes such as sludge, sandblast waste, treated wood, and contaminated soils is reviewed by the Health Department. Permits are issued for wastes that will be allowed in the garbage. The State of Washington's dangerous waste regulations as well as other criteria are used in the decision process.

Sumps, holding tanks or other temporary storage devices may be useful for storing relatively small volumes of liquid wastes on a temporary basis if you cannot discharge to a sanitary sewer or septic system. There are commercial services that can help you identify, quantify, transport, and dispose of any waste that you may generate. They can pump out your sump or holding tank and haul the waste to authorized disposal locations. These can be found in the yellow pages under the headings "Sewer Contractors and Cleaners" and "Tank Cleaning," or on the King County Stormwater Services website at *www.kingcounty.gov/stormwater*. Holding tanks must be pumped out or drained before the tank is full. Septic system pump out and hauling contractors may only dispose of domestic sewage and cannot haul industrial wastes.

Costs of disposal vary considerably depending on the types of materials, quantities, methods of collection and transport, and whether the wastes are mixed. The rate the contractor charges will generally reflect the costs of testing and/or treating waste materials (if necessary) and the subsequent disposal. It is important to keep different types of wastes separated, so that the disposal contractors can take them to the appropriate place without causing inadvertent contamination problems elsewhere, and so that you are not paying too much for disposal of materials that are not contaminated (e.g. regular garbage). It is essential to be familiar with disposal alternatives and the different types of contractors for each disposal option so that all wastes are disposed of properly.

The disposal of wastes is the responsibility of the generator. Before agreeing to let a company handle your waste, it is recommended that you check the company's references. All waste collected by the company should be delivered to an authorized site. Transfer of waste to a vendor does not release a generator from legal obligation for disposal to a licensed disposal facility. Generators of wastes to be hauled off site should keep copies of all transactions, including waste manifests and receipts.

Public Health – Seattle & King County –– Waste Characterization

(206) 263–8528
www.kingcounty.gov/healthservices/health/ehs/toxic/SolidWaste.aspx

Washington State Department of Ecology Dangerous Waste TSD information

The Department of Ecology is the source of information on businesses that provide dangerous waste treatment, storage, and disposal (TSD) services, and information on applicable regulations for TSD businesses.

www.ecy.wa.gov/programs/hwtr/managewaste.html

Drainage Maintenance Contractors

INFORMATION SHEET

The firms below perform drainage system cleaning and maintenance services. King County provides this list for your convenience but makes no recommendation whatsoever regarding these firms. Property owners are encouraged to obtain at least three bids for each job, check references, and inspect the work that has been done to ensure the work has been completed as per County requirements.

A-1 Services, Inc.
P.O. Box 84523
Seattle, WA 98134
Phone: 206–749–5700 or 1–800–343–8096
Fax: 1–800–659–3624

Acain's Parking Lot Services
PO Box 1270
Maple Valley, WA 98038
425–890–1214–Troy 206–719–1509–Joey
Fax: 425–392–0694
cainspw@hotmail.com

Action Services
PO Box 4339
Bremerton, WA 98310
Phone: 360–373–4265 or 1–800–697–1000
Fax: 360–373–9711
amy@getasc.com

Advanced Environmental Solutions, Inc.
8463 South 212th St.
Kent, WA 98031
Phone: 253–872–9363 or 1–800–275–3549
Fax: 253–872–0260
www.shopaes.com

Apex Companies, Llc
Pacific NW Regional Offices:
10220 North Nevada, Suite 70
Spokane, WA 99218
Phone: 509–922–4973
Fax: 509–922–1783
www.apexcos.com

Aqua Clean Jet–N–Vac
18912 SE 133rd Place
Renton, WA 98059
Phone: 425–271–5459 or 1–800–84–CLEAN
Fax: 425–227–9793
www.aquacleanjetnvac.com

Best Parking Lot Cleaning, Inc.
P.O. Box 159
Sumner, WA 98390
Phone: 1–888–851–2378 or 1–800–310–7406
Emergency: 253–221–1018
Fax: 253–770–0724
www.bestparkinglot.com

Bodine Construction
6009 212th St. SW
Lynwood, WA 98036
Phone: 425–778–2557 Emergency: 206–510–5482
Fax: 425–672–2434
www.bodineconstruction.com

Bravo Environmental Services
6437 S. 144th St.
Tukwila, WA 98168
Phone: 425–424–9000
Fax: 425–424–9002
www.bravoenvironmental.com

Catchall Environmental
2522 North Proctor St., Suite 370
Tacoma, WA 98406
Phone: 253 572–0989
Cell: 253 279–5110
www.catchallenvironmental.com

Ccs (Cowlitz Clean Sweep)
55 International Way
Longview, WA 98632 (works in King County)
Phone: 888–423–6316
Fax: 360–423–3409
www.pnecorp.com

Certified Cleaning Services, Inc.
2103 East 112th St.
Tacoma, WA 98445
Phone: 253–536–5500 or 1–800–290–3008
Fax: 253–536–5900
www.certifiedcleaning.com

Clean Harbors Environmental Services
26328 79nd Ave. South
Kent, WA 98032
Phone: 253–639–4240
Fax: 253–639–4249
www.cleanharbors.com

CS Drainage Systems Cleaning
PO Box 46876
Seattle, WA 98146
Phone: 206–242–7280
Fax: 206–257–1529
drainagesystems@gmail.com

Davidson Macri Inc.
12020 SE 32nd St., Suite 4
Bellevue, WA 98005
Phone: 425–289–1145 or 1–866–457–9337
Fax: 425–289–1146
www.davidsonmacri.com

Deangelo Brothers Inc
13122 NE David Circle
Portland, OR 97230
Phone: 503–542–0906
Fax: 503–542–0908
www.dbiservices.com

Drain Pro
5111 85th Ave. East, C–2
Puyallup, WA 98371
Phone: 253–255–5663
Fax: 253–926–5555
www.drainproinc.com

Drain Pro Plumbing, Inc.
9620 South 242nd Court
Kent, WA 98030
Phone: 253–236–5000
Fax: 253–277–0794

Emerald Services
7343 East Marginal Way South
Seattle, WA 98108
Phone: 206–832–3000 or 206–832–3052
Fax: 206–832–3030
www.emeraldservices.com

Environmental Quality Management
6825 216th St SW
Lynnwood, WA 98036
Phone: 425–673–2900
Fax: 425–673–7511

Evergreen Sanitation Aka Coastal Environmental
P.O. Box 259
Lake Stevens, WA 98258
Phone: 206–622–7070 or 1–800–433–1678
www.evergreensanitation.com

Everson's Econovac
P.O. Box 428
Sumner, WA 98390
Phone: 253–848–5250
Fax: 253–848–5363
www.eversons–econovac.com

Fischer Plumbing
1115 NW 51nd St.
Seattle, WA 98107
Phone: 206–337-2141
Fax: 206–784–4924
www.fischerplumbing.com

Guardian Industrial Services, Inc.
1813 99th St. East
Tacoma, WA 98445
Phone: 253–536–0455
Fax: 253–536–3072
www.guardianindustrial.net

Innovac
20909 70th Ave. West
Edmonds, WA 98026
Phone: 206–783–3317 or 1–800–945–4081
Fax: 206–783–9109
www.innovac.com

Jim Dandy Sewer & Plumbing
1501 NW 46th St.
SEATTLE WA 98107
Phone: (206) 633–1141 or (425) 454–8153
Fax: (206) 784–2095
www.jimdandysewer.com

Lavell Vac & Drainage
P.O. Box 3028
Federal Way, WA 98063
Phone: 253–815–0988
Fax: 253–815–0325
office@lavellvac.com

Marine Vacuum Service, Inc.
PO Box 24263
Seattle, WA 98124
Phone: 206–762–0240 or 1–800–540–7491
Fax: 206–763–8084
www.marinevacuum.com

Marshall Brothers Vacuum Service
4004 103rd Ave. SE
Lake Stevens, WA 98258
Phone: 425–377–9820
Fax: 425–377–9830

Master Vac
PO Box 440
Kapowsin, WA 983454
Phone: 253–875–0074
Fax: 360–893–1091
Emergency: 253–377–3007
www.rickysstormdraincleaning.com

Mcdonough & Sons, Inc.
27218 SE Kent Kangley Rd.
Ravensdale, WA 98051
Phone: 425–432–1054
www.msisweep.com

Northwest Cascade, Inc.
P.O. Box 73399
Puyallup, WA 98373
Phone: 253–838–2359 or
1–800–562–4442
www.nwcascade.com

Northwest Natives, Inc.
P.O. Box 52985
Bellevue, WA 98015
Phone: 206–271–2776
Fax: 425–222–4843
www.nwnatives.com

Northwest Stormwater Management
1621 Central Ave. South
Kent, WA 98032
Phone: 206–480–2072 – South End
Phone: 206–851–4869 – Seattle
Fax: 253–480–2073
www.nwstormwater.com

NRC Environmental Services
9520 10th Ave. South Suite 150
Seattle, WA 98108
Phone 1–800–337–7455 or 206–607–3000
Fax: 206–607–3001
www.nrces.com

Olson Brothers Pro–Vac
6622 112th St East
Puyallup, WA 98373
Phone: 253–435–4328
Fax: 253–435–5788
Cell: 253–606–4212
dean@pro–vac.com

Pacific Concrete Services (PCS)
26220 79th Ave. South
Kent, WA 98032
Phone: 253–856–2572
Fax: 253–859–5087
www.pcsjac.com

Pipeline Video & Cleaning North
2212 Port of Tacoma Rd.
Tacoma, WA 98421
Phone: 253–661–0828
Fax: 253–952–7465

Pro–Vac Clean Service
6622 112th St. East
Puyallup, WA 98373
Phone: 253–435–4328 or 1–888–565–5665
Fax: 253–435–5788
www.pro–vac.com

PSC Environmental Services
18000 72nd Ave. South
Kent, WA 98032
Phone: 1–800–882–9785 or 425–227–0311
Emergency: 1–877–577–2669
Fax: 425–204–7164
www.pscnow.com

Reliakor Services
4008 132nd Pl. NE Suite 502
Marysville, WA 98271
Phone: 425–487–6313
Fax: 425–487–6413
www.reliakor.com

Rescue Rooter
175A Roy Rd. SW, Suite 101
Pacific, WA 98047
Phone: 253–872–6970
Fax: 253–872–2390
www.rescuerooter.com

Safety Kleen
3102 B St NW
Auburn, WA 98001
Phone: 253–561–8270
Fax: 253–939–5051
www.safety–kleen.com

Seattle Drain Service
1820 North 48th St.
Seattle, WA 98103
Phone: 206–632–8069
www.seattledrainservice.com

Thermo Fluids, Inc.
14221 29th St. East, Suite 101
Sumner, WA 98390
Phone: 253–863–3310
Fax: 253–863–3490
www.thermofluids.com

Tiger Construction and Excavation
12201 Avondale Rd. NE
Redmond, WA 98052
Phone: 425–558–4437
Fax: 425–869–2633
david@tigerexcavation.com
jill@tigerexcavation.com

Ventilation Power Cleaning
3914 Leary Way NW
Seattle, WA 98107
Phone: 1–800–347–3509 or 206–634–2750
Fax: 206–634–2753
www.ventilationpower.com

Whirlwind Services, Inc.
6801 – 216th St SW
Mountlake Terrace, WA 98043
Phone: 425–697–4373 or 1–800–800–2935
www.whirlwindservices.com

SoundEarth Strategies Construction, LLC
2811 Fairview Ave East, Suite 2000
Seattle, Washington 98102
Phone: 206–306–1900
Mobile: 206–462–0380

Check the King Country Stormwater website for the most current list of drainage maintenance contractors.

Oil/Water Separator Information Sheet

INFORMATION SHEET

Application and Description

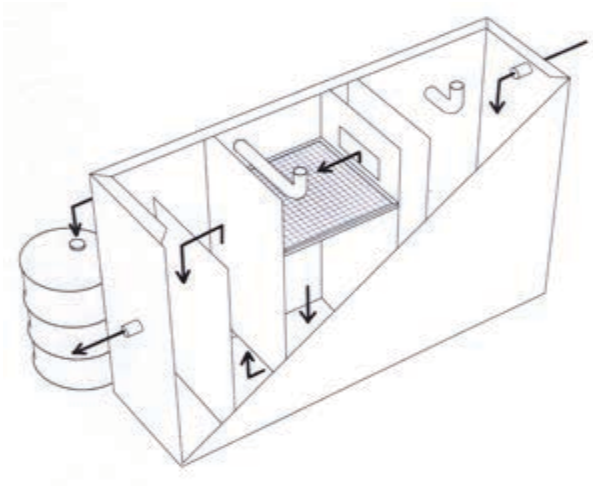

An oil/water separator is a device designed to remove oil, grease, and similar floatable pollutants from stormwater runoff. The name commonly refers to an underground structure; however, more simple designs exist.

Oil/water separators are appropriate at locations where petroleum products may be difficult to control with source–control BMPs. An oil/water separator can be a tee section in a catch basin that contains spills on an emergency basis, or a complex unit that is designed to treat runoff from sites.

For many sites, such as small parking lots, a simple down–turned elbow in a catch basin will temporarily contain pollutants, so they can be cleaned up a before leaving the site. If tee sections are used or installed in catch basins, other measures must be used such as oil absorbent pads or booms. On sites with greater potential for oil spills and high concentrations of oil and grease in runoff, such as fleet vehicle lots, auto repair shops, or fueling stations, a more complex oil/water separator is needed. Spills must always be cleaned up immediately to avoid downstream contamination. There are two types of complex oil/water separators commonly used in situations where oily runoff is a concern: the American Petroleum Institute (API) separator and the coalescing plate interceptor (CPI). The API separator has the appearance of a long septic tank and must be sized relative to the area it is treating. By placing coalescing plates in the separator, its size can be significantly reduced while retaining the efficiency needed. Consequently, the CPI separator is more commonly used. The savings from reducing the cost of vault construction offset the relatively high cost of the plates.

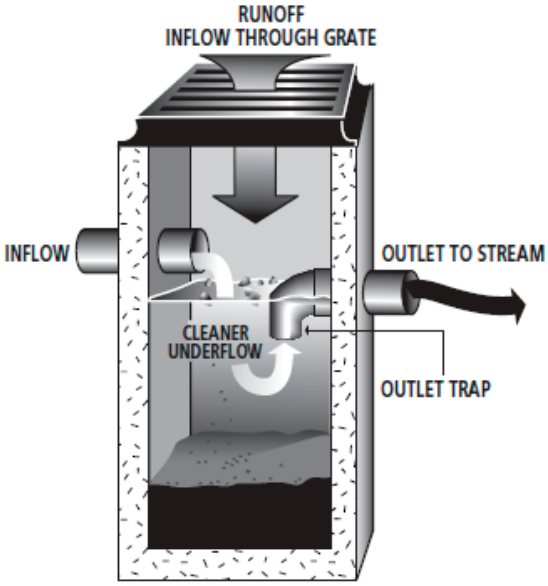

These oil/water separators should be used for targeted pollutant removal in high traffic areas where oil or petroleum products are a significant problem rather than as an all–purpose stormwater treatment facility. The separator will function more efficiently and require less maintenance if the amount of stormwater passing through is limited. Only runoff that has been exposed to high oil activity areas should be directed through the oil/water separator. Avoid directing stormwater (from other areas on your site) through the separator.

For information on oil/water separators that will be used as pretreatment prior to discharge to the sanitary sewer, contact your local sewer agency or King County's Industrial Waste Program within the Wastewater Treatment Division.

Design and Maintenance

API and CPI oil/water separators must be designed and sized in accordance with the King County Surface Water Design Manual.

Oil/water separators must be checked frequently during the wet season. These inspections must occur often enough to prevent BMP failure that allows waste products to exit the oil/water separators. Violations can be cited under King County Code 9.12. How often material should be removed depends on the amount of petroleum in the influent, but the separator should be cleaned at least quarterly, and particularly in the fall before the first storm of the wet season. In addition, the following maintenance requirements apply:

- Remove all sediments from the unit or catch basin if greater than six inches in depth, or if within six inches of the outlet pipe. Sediments should be tested and disposed of properly.
- Oil absorbent pads should be replaced as needed, but should always be replaced in the fall prior to the wet season, and in the spring. Collect used pads in a covered container for oil recovery and recycling by a vendor.
- Use a vendor to clean out the oil/water separator and take any oil and residuals to an approved offsite location for disposal and/or recycling.
- The outlet pipe of the separator must be blocked during cleaning operations.
- Any standing water removed during the maintenance operation must be disposed to a sanitary sewer at a discharge location approved by the local jurisdiction.

Local Sewer Agency

The name and phone number is identified on your water and sewer bill.

King County Wastewater Division – Industrial Waste Program

(206) 263–3000
www.kingcounty.gov/environment/wastewater/IndustrialWaste

King County Business Waste Line

(206) 263–8899
www.govlink.org/hazwaste/

King County Surface Water Design Manual

http://www.kingcounty.gov/environment/waterandland/stormwater

Spill Response and Cleanup Plan Information Sheet

INFORMATION SHEET

It is critical to have your employees trained, and have a plan and supplies in place to address spills that might occur on or near your property. A spill plan identifies the materials of concern and outlines the steps to be taken when responding to a spill. Plans are customized to each site and can be prepared in–house or by consultants. A template for a sample spill plan follows. There are numerous resources and templates for spill prevention and clean–up plans that can be found online.

The nature of the business, the type and amount of liquid materials transferred and stored on site, and the potential for spills will dictate the scope and detail of a spill plan. It is critical that the plan be kept up to date to reflect personnel and procedural changes and to have a regular, ongoing review of the plan by all affected employees.

Spill plans should include the following elements:

- Identification of materials of concern
- Spill prevention methods (if you don't have a site pollution prevention plan)
- Likely areas for spill or leaks to occur
- Site plan that identifies the locations of liquid material storage and spill control equipment
- Spill control techniques
- Evacuation procedures (if necessary)
- Cleanup procedures
- Designated responsible employees
- Spill reporting protocols
- Emergency contact numbers

Even if unsure whether a spill presents a threat to human health, welfare, or the environment, go ahead and report it. This will ensure that you have complied with state and federal spill reporting laws. The sooner the agencies know about an incident, the quicker they can deploy resources and assistance to reduce damage to the environment and protect natural resources.

SPILL RESPONSE AND CLEANUP PLAN

Company Name	Date
Site Address	Runoff Drains to

FACILITY ACTIVITIES (Check all that apply)

- ❑ Fueling & fuel transfer
- ❑ Outdoor manufacturing
- ❑ Outside drum or container storage
- ❑ Vehicle, equipment & building washing
- ❑ Loading/unloading of products
- ❑ Landscape construction/maintenance
- ❑ Outside storage of uncovered materials
- ❑ Other: _____

LIQUIDS STORED ONSITE (Check all that apply)

Food Preparation/Waste	***Acids, Bases,Chemicals***	***Other***
❑ Cooking Oil	❑ Acid	❑ Fertilizers
❑ Grease	❑ Ammonia	❑ Inks, dyes
❑ Other liquids	❑ Caustic, base, lye	❑ Other liquids
	❑ Photographic chemicals	❑ Pesticides, herbicides
Food Preparation/Waste	***Acids, Bases,Chemicals***	***Other***
❑ Cooking Oil	❑ Acid	❑ Fertilizers
❑ Grease	❑ Ammonia	❑ Inks, dyes
❑ Other liquids	❑ Caustic, base, lye	❑ Other liquids
	❑ Photographic chemicals	❑ Pesticides, herbicides

SPILL RESPONSE AND CLEANUP PLAN, CONTINUED

CONTACTS

Title	Name	Phone Numbers
Site Manager		
Environmental Officer		
Onsite Spill Cleanup Coordinator		
Backup Spill Cleanup Coordinator		
Business Owner		
Cleanup Contractor		

Potential Spill Areas (list all locations)

_____

_____

_____

_____

Spill Material & Spill Kit Locations (list all locations)

_____

_____

_____

Attach a Site Plan

SPILL RESPONSE AND CLEANUP PLAN, CONTINUED

ADDITIONAL INFORMATION

Provide a description of any additional emergency cleanup and disposal procedures not listed above that you will use at your site, or any other special conditions that exist:

SPILL REPORTING

Stop, contain, and clean up the chemical spill if:

- The spilled chemical and its hazardous properties have been identified;
- The spill is small and easily contained; and
- The responder is aware of the chemical's hazardous properties.

Spill clean up

- Alert the manager/owner of property where the spill has occurred.
- Obtain personal protective equipment, as appropriate to the hazards. Refer to the Material Safety Data Sheet or other references for information.
- Stop the source of the spill (upright container, plug leak, etc.).
- Seal off storm drains with berms or drain covers and stop any spread of the spill.
- Protect floor drains or other means for environmental release. Spill socks and absorbents may be placed around drains, as needed.
- Use pads and/or granular sorbent to clean up spilled material. Loose spill–control material should be distributed over the entire spill area, working from the outside, circling to the inside. When spilled materials have been absorbed, use brush and scoop to place materials in an appropriate container.
- Let pads sit on spill to absorb spilled material.
- Remove spent pads and/or sorbent and dispose of properly.

If a spill or release cannot be controlled or injuries have occurred due to the release the following procedures should be implemented:

- Summon help or alert others of the release;
- Evacuate the immediate area and provide care to the injured – Call 911;
- If potential fire or explosion hazards exist, initiate evacuation procedures – Call 911;
- Respond defensively to any uncontrolled spills:
- Use appropriate personal protective equipment when responding to any spill;
- Attempt to shut off the source of the release (if safe to do so);
- Eliminate sources of ignition (if safe to do so);
- Protect drains by use of adsorbent, booms or drain covers (if safe to do so).
- Notify the onsite emergency contacts;
- Notify other trained staff and/or emergency response contractors to assist with the spill response and cleanup activities;
- Be prepared to provide MSDS information to the fire department, EMT, hospital or physician;
- Notify the appropriate agency if a release has entered the environment. Refer to the Spill Reporting Table for reporting thresholds.

SPILL RESPONSE AND CLEANUP PLAN, CONTINUED		
SPILL REPORTING		
A spill of hazardous material, oil, or other substance, unless there is no chance it will leak out of the building, get into a storm or sewer drain or endanger people.	**Ecology Northwest Regional Office:** (425) 649–7000	Immediately, but no later than 24–hours after obtaining the knowledge.
A spill or discharge which could constitute a threat to human health, welfare, or the environment.	**Ecology Northwest Regional Office:** (425) 649–7000 AND **911**	Immediately, but no later than 24–hours after obtaining the knowledge.
A spill or discharge of oil or hazardous substances which presents a threat to human or health, welfare, or the environment.	**National Response Center:** (800) 424–8802 AND **Washington Emergency Management Division:** 1–800–258–5990 OR 1–800–OILS911 AND **Ecology Northwest Regional Office:** (425) 649–7000 AND **911**	Immediately
A spill or discharge which might cause bacterial contamination of shellfish.	**WA State Department of Health:** **(360) 236–3330** AND **Ecology Northwest Regional Office:** (425) 649–7000	Immediately
All spills to the storm drain system, including catch basins and drainage ditches, as well as streams, lakes, etc.	**King County Stormwater Services:** (206) 477–4811	Immediately

To the best of your ability, please be ready with the following information:

- Where is the spill?
- What spilled?
- How much spilled?
- How concentrated is the spilled material?
- Who spilled the material? Is anyone cleaning up the spill?
- Are there resource damages (e.g. dead fish or oiled birds)?
- Who is reporting the spill?
- How can we get back to you?

Water Quality Treatment BMPs

INFORMATION SHEET

Water quality treatment BMP options may be required if operational or basic structural source controls do not adequately address pollutant discharges from your site. Source control BMPs, as presented in Chapter Three, must always be implemented before treatment BMPs are considered.

The following information describes some basics of water quality treatment systems/facilities. Design and construction details can be found in the King County Surface Water Design Manual (which contains relevant information for the treatment BMPs discussed). A private vendor specializing in the treatment system or an engineering consultant can also provide information on treatment systems. All of these systems require regular inspection and maintenance in order to function properly.

Businesses and agencies are allowed to select a treatment BMP other than those presented in this manual if they follow the adjustment process as outlined in the King County Surface Water Design Manual and obtain approval from the King County Water Quality Compliance Unit.

Table 5.2 presents a brief description of some typical water quality treatment BMPs. Table 5.3 presents water quality treatment BMPs for removing specified pollutants. One treatment BMP usually cannot treat all pollutant problems. Each BMP is designed for a specific purpose and is capable of removing only specified pollutants. If you decide to install a water quality treatment BMP, always ensure that it is removing the pollutant of concern from your site runoff.

TABLE 5.2 WATER QUALITY TREATMENT BMPs	
Treatment BMP	**Brief Description**
Oil/Water Separator	An underground vault specifically designed to remove oil and grease. Also will remove floatable and some settleable solids.
Catch Basin Insert	A filtering device that is installed within an existing catch basin and uses various sorbent materials and settling space to collect pollutants.
Catch Basin Sump and Vault Filter	A device similar to catch basin inserts, only larger and placed underground.
Leaf Compost Filters	A filtering device that is installed above or below ground and uses leaf compost to remove pollutants from stormwater.
Wet Pond, Constructed Wetland, Wet Vault	A wet pond is a stormwater pond that retains a permanent pool of water. A constructed wetland is similar to a wet pond, but shallower and supporting wetland vegetation in large areas. A wet vault is an underground, covered, engineered structure that retains a permanent pool of water.
Vegetated Biofilter – Biofiltration Swale and Filter Strip	A biofiltration swale is a long, gently sloped ditch or depression Designed to treat water as it passes through the vegetation. Grass is the most common vegetation. A filter strip is a grass area, wider than biofilters, also with gentle slopes. Water usually enters as sheet flow from the adjacent pavement.
Sand Filter	A structure placed in the landscape, with grass grown on top, or in vaults. Stormwater passes through the sand allowing particulate pollutants to be filtered out.
Infiltration	A normally dry basin which temporarily stores stormwater until it soaks through the bottom and sides of the basin, and infiltrates into surrounding soil.
Chemical Treatment	See the King County Design Manual for allowable chemical treatment including chitosan and alum and CO2 sparging.

TABLE 5.3 APPROPRIATE USES FOR WATER QUALITY TREATMENT BMPs	
Pollutants To Remove	**Appropriate Treatment BMPs**
Oil/Grease Sources: vehicle and equipment areas, industrial areas, food preparation	Oil/water separators; catch basin inserts; catch basin sump/vault filters, leaf compost filters.
Sediments/Solids Sources: sand/gravel storage, construction sites, unpaved areas, agriculture/livestock uses	For coarse sediments – wet pond/vault; constructed wetland (with forebay); vegetated biofilter; sand filter; catch basin insert; catch basin sump/vault filters; leaf compost filters. For fine sediments – wet pond/vault; constructed wetland (with forebay); vegetated biofilter; sand filter. Also see catch basin sump/vault filters, chemical treatment.
Phosphorus Compounds Sources: detergents/cleaners, fertilizers, organic matter, animal wastes	For particulate phosphorus – wet pond/vault; constructed wetland (with forebay); vegetated biofilter; sand filter. If dissolved phosphorus must also be removed – a large "oversized" wet pond or sand filter.
Nitrogen Compounds Sources: fertilizers, animal wastes, organic matter	For particulate nitrate – wet pond/vault; constructed wetland (with forebay); vegetated biofilter; sand filter. For dissolved nitrate – constructed wetland.
Metals Sources: industrial areas, vehicle and equipment areas, paints, pesticides	For particulate metals – wet pond/vault; constructed wetland (with sediment forebay); vegetated biofilter; sand filter. For dissolved metals – leaf compost filter or constructed wetland.
Fecal Coliform Bacteria Sources: animal wastes; fertilizers	There is no treatment BMP that can reliably reduce fecal coliform bacteria to acceptable levels. Some studies have shown constructed wetlands provide some benefit.
pH Sources: metal plating, printing/graphic industries, cement/concrete production, cleaners	A constructed wetland can neutralize some ranges of pH.
BOD and Trace Organics Sources: organic debris, food wastes, some chemical wastes	For particulate BOD – see "particulate nitrate" above. For dissolved BOD – A constructed wetland will remove some dissolved BOD and trace organics; more reliable performance requires activated carbon.

CHAPTER 6 TECHNICAL ASSISTANCE

There is a variety of local and regional programs as well as state and federal agencies that can offer technical assistance in selecting and implementing BMPs. Many local governments as well as private sector associations are available to provide suggestions and guidance regarding the most effective and appropriate measures to take in order to protect King County's valuable water resources. This section provides names, contact information, and brief descriptions of several sources of information and assistance available to the businesses and residents of unincorporated King County.

In addition to the personal assistance offered by many organizations and programs, there is also a broad range of written materials available to help businesses and residents select, design, and understand applicable BMPs for water quality protection. This section provides information that can help in the formation of pollution prevention strategies to protect King County's water quality.

GENERAL BMP SELECTION

King County Water and Land Resources Division

The Water and Land Resources Division has water quality engineers available to provide free on–site consultations to businesses and residents for assistance in implementing the water quality BMPs in this manual.

For information, or to request an on–site consultation, contact:

King County Water and Land Resources Division
201 South Jackson, Suite 600
Seattle, WA 98104
(206) 477–4811
www.kingcounty.gov/stormwater

Stormwater Management Manual for Western Washington Volume IV

The Department of Ecology developed this manual as a model for local governments. It contains requirements for stormwater management system design, erosion control, and urban best management practices. Volume IV discusses source control.

To obtain a copy of the manual, go to:

https://fortress.wa.gov/ecy/publications/summarypages/1210030.html

Trade/Business Associations

Local trade or business associations can be valuable sources of information for specific BMP applications on a business property. Many trade and business associations have developed pollution prevention information for the benefit of their members that is unique to their specific types of operations. Contact the appropriate trade or business association to obtain information, BMP assistance, and help in locating other businesses that are working out similar problems.

SANITARY SEWER AND SEPTIC SYSTEMS RESOURCES

Local Sewer Agency

Contact your local sewer agency for information on allowable discharges and location of your side sewer. The name of your local sewer agency is identified on your water and sewer bill.

Public Health Seattle King County – Wastewater Program

Information and regulation on on–site sewage treatment systems (septic systems) are available for both property owners and on–site system professionals.

Eastgate Environmental Health Services
14350 SE Eastgate Way
Bellevue, WA 98007
(206) 296–4932
www.kingcounty.gov/healthservices/health/ehs/wastewater.aspx

King County Wastewater Division – Industrial Waste Program

The Industrial Waste Program provides information on what can be discharged to the sanitary sewer. Industrial Waste can also assist with information for rerouting illicit storm sewer connections to the sanitary sewer.

King County Industrial Waste
201 S Jackson St, Suite 500
Seattle, WA 98109–1658
(206) 477–5300
www.kingcounty.gov/environment/wastewater/IndustrialWaste

WASTE MANAGEMENT AND RECYCLING

King County Solid Waste Division

The Solid Waste Division (SWD) provides garbage transfer, disposal and recycling services for residents and businesses in all of King County, except for Seattle and Milton. SWD also provides household hazardous waste disposal options and recycling education programs for its residents.

General information: (206) 477–4466
your.kingcounty.gov/solidwaste/index.asp

King County Business Waste Line

The Business Waste Line answers questions from small businesses about hazardous waste. The Waste Line may also be used to report complaints and hazardous waste violations.

Business Waste Line: (206) 263–8899
www.govlink.org/hazwaste/

Hazardous Waste Onsite Consultation Program

The Onsite Consultation Program provides free visits to businesses that request assistance with hazardous waste handling and waste reduction. Only small quantity waste generators or businesses that are potential small quantity waste generators qualify for this service.

Seattle/King County Hazardous Waste Management Program
130 Nickerson Street, Suite 100
Seattle, WA 98109
206–263–8899
www.hazwastehelp.org/BHW/index.aspx

The Household Hazards Line (Household Hazardous Waste)

This telephone hot line provides hazardous waste information and referrals to the general public. (Businesses should call the Business Waste Line, also listed in this Reference Guide.) The Hazards Line tells citizens where to dispose of their hazardous waste and suggests less hazardous alternatives. It also provides operations times and locations for household disposal sites for King County and the City of Seattle.

Hazards Line: (206) 296–4692
www.hazwastehelp.org/HHW/hhw.aspx

King County Solid Waste Division – Workplace Recycling Program

This program assists businesses with recycling by: 1) providing information on waste reduction and recycling services for particular needs; 2) helping you work with your employees to promote participation; 3) offering information on buying recycled products; and 4) providing you with ongoing support to ensure your program is successful.

Workplace Recycling
King County Solid Waste Division
201 S Jackson St #701
Seattle, WA 98104
(206) 477–4466
your.kingcounty.gov/solidwaste/business/index.asp

Seattle – King County Department of Public Health Waste Characterization

This program serves businesses in Seattle and King County that have questionable wastes such as sludge, sand-blast waste, treated wood, and contaminated soils. Waste characterization staff assists generators with profiling their waste and determining if the waste can be disposed of in the garbage. For some wastes staff will be able to provide other options such as treatment, recycling or reuse. The Health Department issues authorizations for proper disposal.

King County Department of Public Health Waste Characterization
(206) 263–8528
www.kingcounty.gov/healthservices/health/ehs/toxic/SolidWaste.aspx

Industrial Materials Exchange (IMEX)

IMEX provides a free service helping businesses that have surplus materials find businesses that need them. Surplus or waste materials, such as solvents, paint, plastics, and wood, are exchanged. The website lists materials available and materials wanted. IMEX is a component of the Local Hazardous Waste Program.

IMEX
130 Nickerson St., Suite 100
Seattle, WA 98109–1658
(206) 263–8465
www.lhwmp.org/home/IMEX/index.aspx

Washington State Department of Ecology

The Department of Ecology has extensive information on managing and reducing waste, hazardous waste and toxics reduction, and pollution prevention.

www.ecy.wa.gov/waste.html
www.ecy.wa.gov/programs/hwtr/index.html
www.ecy.wa.gov/green.html

Washington State Department of Ecology Dangerous Waste TSD information

The Department of Ecology is the source of information on businesses that provide dangerous waste treatment, storage, and disposal (TSD) services, and information on applicable regulations for TSD businesses.

www.ecy.wa.gov/programs/hwtr/managewaste.html

Washington Toxics Coalition

The Washington Toxics Coalition is a nonprofit organization dedicated to providing information on reducing the use and production of toxic materials. The Coalition offers fact sheets, research materials, and personal assistance to individuals interested in reducing toxics (such as pesticides, solvents, cleaning chemicals, and a variety of other chemicals) and finding safer alternatives to toxic materials.

Washington Toxics Coalition
4516 University Way NE
Seattle, WA 98105
(206) 632–1545
www.watoxics.org

LAND USE, FIRE CODE, AND BUILDING CODE REQUIREMENTS

King County Department of Planning and Environmental Review

The Department of Planning and Environmental Review (DPER) should be consulted to determine whether any permits may be required in constructing BMPs, modifying property layout, or otherwise altering a site to control runoff contamination. If permit requirements are overlooked or ignored, business or property owners may be subject to fines. DPER should be contacted while plans are being formed for BMPs, and before any action is taken, to determine permit applicability and potential fees.

King County DPER
35030 SE Douglas St., Suite 210
Snoqualmie, WA 98065–9266
(206) 296–6600
www.kingcounty.gov/property/permits.aspx

King County Fire Marshal

Questions on specific fire code requirements for individual site conditions and potential BMP scenarios can be directed to the King County Fire Marshal's office.

King County Fire Marshal
35050 SE Douglas St., Ste. 210
Snoqualmie, WA 98065–9266
(206) 296–6600
www.kingcounty.gov/fire

King County Critical Area Ordinance User's Manual

King County has enacted a Critical Areas Ordinance (CAO) to define and protect certain land and water features throughout the county. The Environmental Education Section of King County's Department of Planning and Environmental Review (DPER) prepared a CAO User's Manual that serves as a reference for the CAO in an easy–to–understand format. The CAO User's Manual can help determine special considerations that may be necessary for implementation of BMPs within or near a designated sensitive area.

To obtain a copy of the manual, go to:
www.kingcounty.gov/property/permits/codes/CAO.aspx#manual

EROSION CONTROL PRACTICES

King County Surface Water Design Manual

This manual contains the requirements and standards for designing surface and stormwater management systems in King County. It also includes a chapter on erosion and sediment control requirements for permitted sites.

To obtain a copy of the manual, go to:
www.kingcounty.gov/environment/water–and–land/stormwater.aspx

Stormwater Management Manual for Western Washington Volume II

The Department of Ecology developed this manual as a model for local governments. It contains requirements for stormwater management system design, erosion control, and urban best management practices. Volume II discusses erosion and sediment control.

To obtain a copy of the manual, go to:
https://fortress.wa.gov/ecy/publications/documents/1210030.pdf

Master Builders Association of King and Snohomish Counties

This is a business association primarily for residential construction companies. Members have experience in applying erosion and sediment control BMPs on both small and large sites. The association can provide references on erosion and sediment control products for use on construction sites as well as material suppliers who carry erosion and sediment control products.

Master Builders Association of King and Snohomish Counties
335 116th Ave SE
Bellevue, WA 98004
(425) 451–7920
www.mba–ks.com/

Associated General Contractors

This association provides information and training on erosion and sediment control for contractors and field staff. The Association also provides resources in the areas of waste disposal and erosion/sediment control. It provides information on recommended water quality protection methods for contractors who maintain equipment yards or are involved in building construction or site preparation activities, such as clearing and grading.

Associated General Contractors
1200 Westlake Avenue North, Suite 310
Seattle, WA 98109
(206) 284–4500
www.agcwa.com/

AIR QUALITY

Puget Sound Clean Air Agency

The Puget Sound Clean Air Agency is the primary entity responsible for regulating air pollution from business and industrial activities in King, Kitsap, Pierce and Snohomish counties. The agency issues air operating permits.

1904 Third Avenue – Suite 105
Seattle, WA 98101
(206) 343–8800
www.pscleanair.org

ENVIRONMENTAL ORGANIZATIONS

Environmental Coalition of South Seattle (ECOSS)

ECOSS is a nonprofit organization that encourages urban redevelopment and a healthy environment by providing education, resources and technical assistance to diverse businesses and communities in the Puget Sound region. ECOSS helps business with environmentally sustainable practices.

8201 10th Ave S, #3
Seattle, WA 98108
(206) 767–0432
www.ecoss.org

Pacific Northwest Pollution Prevention Resource Center

The Pacific Northwest Pollution Prevention Resource Center (PPRC) is a nonprofit organization that provides pollution prevention information to business, government, non–government organizations, and other sectors.

2101 Fourth Ave, Suite 1080
Seattle, Washington 98121
(206) 352–2050
www.pprc.org/

Puget Sound Starts Here

Puget Sound Starts Here is a partnership of cities, counties, state and federal agencies, nonprofit groups, and local organizations dedicated to improving water quality and aquatic habitat in the Puget Sound region. Visit the website to find out how you can protect Puget Sound as a resident.

www.pugetsoundstartshere.org

QUICK PHONE REFERENCE

Environmental Coalition of South Seattle ..... (206) 767–0432

Associated General Contractors ..... (206) 284–4500

King Conservation District ..... (425) 282–1900

King County Department of Permitting and Environmental Review ..... (206) 296–6600

King County Fire Marshall ..... (206) 296–6600

King County Industrial Waste Program ..... (206) 477–5300

King County Local Hazardous Waste Program ..... (206) 263–3050

King County Solid Waste Division ..... (206) 477–4466

King County Stormwater Services ..... (206) 477–4811

Master Builders Association of King and Snohomish Counties ..... (425) 451–7920

Pacific Northwest Pollution Prevention Research Center ..... (206) 352–2050

Puget Sound Clean Air ..... (206) 343–8800

Seattle–King County Health Department

- Business Waste Line ..... (206) 263–8899
- Hazards Line (for households) ..... (206) 296–4692
- Industrial Materials Exchange (IMEX) ..... (206) 296–4899
- Wastewater Program (septic systems) ..... (206) 296–4932
- Waste Characterization ..... (206) 296–4692

Washington State Department of Ecology

- Northwest Regional Office (Bellevue) ..... (425) 649–7000
- Reporting of Spills ..... (425) 649–7000
- Waste reduction and recycling 1–800–RECYCLE

Washington Toxics Coalition ..... (206) 632–1545