REFERENCE

KING COUNTY, WASHINGTON
SURFACE WATER DESIGN MANUAL

Note:

Although some of the materials in this Reference section may have been adopted by administrative rule or by ordinance, the administrative rule that adopted the Surface Water Design Manual has not formally adopted any of the materials in this section. All of the papers, forms, notes, equations, symbols, maps and other materials herein are for reference only.

King County assumes no responsibility for the completeness or current status of the materials contained in this section. It is the sole responsibility of each applicant to insure that the most current materials are used in preparing a permit application for their proposed project. Copies of these materials are available from DNRP or DDES, or may be downloaded from the King County Water and Land Resources Division "Surface Water Design Manual Website."

1 KCC 9.04 – Surface Water Runoff Policy

2 Adopted Critical Drainage Areas

3 Other Adopted Area Specific Drainage Requirements

- A RA Zone Clearing Restrictions

4 Other Drainage Related Regulations and Guidelines

- A Grading Code Soil Amendment Standard
- B Clearing & Grading Seasonal Limitations
- C Landscape Management Plan Guidelines
- D Shared Facility Maintenance Responsibility Guidance

5 Wetland Hydrology Protection Guidelines

6 Hydrologic/Hydraulic Design Methods

- A EPA Infiltration Rate Test
- B Pond Geometry Equations

7 Engineering Plan Support

- A King County Standard Map Symbols
- B Standard Plan Notes and Example Construction Sequence

8 Forms and Worksheets

- A Technical Information Report (TIR) Worksheet
- B Offsite Analysis Drainage System Table
- C Water Quality Facility Sizing Worksheets
- D Flow Control and Water Quality Facility Summary Sheet and Sketch
- E CSWPPP Worksheet Forms
- F Adjustment Application Form and Process Guidelines
- G Dedication and Indemnification Clause - Final Recording
- H Bond Quantities Worksheet
- I Maintenance and Defect Agreement
- J Drainage Facility Covenant
- K Drainage Release Covenant
- L Drainage Easement
- M Flow Control BMP Covenant
- N Impervious Surface Limit Covenant
- O Clearing Limit Covenant
- P River Protection Easement

9 Interim Changes to Requirements

- A Blanket Adjustments
- B Administrative Changes

KING COUNTY, WASHINGTON
SURFACE WATER DESIGN MANUAL

REFERENCE 1

KING COUNTY CODE CHAPTER 9.04 SURFACE WATER RUNOFF POLICY

KING COUNTY

1200 King County Courthouse
516 Third Avenue
Seattle, WA 98104

Signature Report

May 26, 2005

Ordinance 15052

Proposed No. 2004-0123.3 **Sponsors** Constantine

AN ORDINANCE related to surface water; amending Ordinance 9163, Section 2, as amended, and K.C.C. 9.04.020, Ordinance 9163, Section 3, as amended, and K.C.C. 9.04.030, Ordinance 2281, Section 5, as amended, and K.C.C. 9.04.050, Ordinance 2281, Section 6, as amended, and K.C.C. 9.04.070, Ordinance 4938, Section 7, as amended, and K.C.C. 9.04.090, Ordinance 10636, Section 3, as amended, and K.C.C. 9.12.015, Ordinance 10636, Section 4, as amended, and K.C.C. 9.12.025 and Ordinance 10636, Section 5, as amended, and K.C.C. 9.12.035 and adding a new section to K.C.C. chapter 9.04.

BE IT ORDAINED BY THE COUNCIL OF KING COUNTY:

SECTION 1. Ordinance 9163, Section 2, as amended, and K.C.C. 9.04.020 are each hereby amended to read as follows:

Definitions. The definitions in this section apply throughout this chapter unless the context clearly requires otherwise.

A. "Adjustment" means a department-approved variation in the application of the requirements of K.C.C. 9.04.050 and the Surface Water Design Manual to a particular project in accordance with K.C.C. 9.04.050C. Adjustment" replaces "variance," which was used in prior editions of the Surface Water Design Manual.

B. "Applicant" means a property owner or a public agency or public or private utility that owns a right-of-way or other easement or has been adjudicated the right to such an easement under RCW 8.12.090, or any person or entity designated or named in writing by the property or easement owner to be the applicant, in an application for a development proposal, permit or approval.

C. "Basin" means a geographic area that contains and drains to a stream or river named and noted on common maps, such as the Cedar river, Sammamish river, Green river, Snoqualmie river, Skykomish river or White river, or a geographic area that drains to a nonflowing water body named and noted on common maps, such as Lake Washington or Puget Sound.

D. "Basin plan" means a plan and all implementing regulations and procedures including, but not limited to, capital projects, public education activities and land use management adopted by ordinance for managing surface and storm water within the basin.

E. "Closed depression" means an area greater than five thousand square feet at overflow elevation that is low-lying and that has no or such a limited surface water outlet that the area acts as a stormwater retention facility.

F. "Construct or modify" means to install a new drainage pipe or ditch or make improvements to an existing drainage pipe or ditch, for purposes other than maintenance, that either serves to concentrate previously unconcentrated surface and storm water runoff or serves to increase, decrease or redirect the conveyance of surface and storm water runoff. "Construct or modify" does not include installation or maintenance of a driveway culvert installed as part of a single-family residential building permit.

G. "Conveyance system" means the drainage facilities and features, both natural and constructed, that collect, contain and provide for the flow of surface and storm water from the highest points on the land down to a receiving water. The natural elements of the conveyance system include swales and small drainage courses, streams, rivers, lakes and wetlands. The constructed elements of the conveyance system include gutters, ditches, pipes, channels and most flow control and water quality treatment facilities.

H. "Department" means the department of natural resources and parks or its successor.

I. "Development" means any activity that requires a permit or approval, including, but not limited to, a building permit, grading permit, shoreline substantial development permit, conditional use permit, special use permit, zoning variance or reclassification, subdivision, short subdivision, urban planned development, binding site plan, site development permit or right-of-way use permit. "Development" does not include a Class I, II, III or IV-S forest practice conducted in accordance with chapter 76.09 RCW and Title 222 WAC or a class IV-G nonconversion forest practice, as defined in K.C.C. chapter 21A.06, conducted in accordance with chapter 76.09 RCW and Title 222 WAC and a county-approved forest management plan.

J. "Director" means the director of the department of natural resources and parks, or any duly authorized representative of the director.

K. "Drainage" means the collection, conveyance, containment or discharge, or any combination thereof, of surface and storm water runoff.

L. "Drainage facility" means a constructed or engineered feature that collects, conveys, stores or treats surface and storm water runoff. "Drainage facility" includes, but is not limited to, a constructed or engineered stream, pipeline, channel, ditch, gutter, lake, wetland, closed depression, flow control or water quality treatment facility, erosion and sediment control facility and other structure and appurtenance that provides for drainage.

M. "Drainage review" means an evaluation by King County staff of a proposed project's compliance with the drainage requirements in the Surface Water Design Manual. The types of drainage review include: small project drainage review, targeted drainage review, full drainage review and large project drainage review.

N. "Erosion and sediment control" means any temporary or permanent measures taken to reduce erosion, control siltation and sedimentation and ensure that sediment-laden water does not leave the site or enter into wetlands or aquatic areas.

O. "Financial guarantee" means a form of financial security posted to do one or more of the following: ensure timely and proper completion of improvements; ensure compliance with the King County Code; or provide secured warranty of materials, workmanship of improvements and design. "Financial guarantees" include assignments of funds, cash deposit, surety bonds or other forms of financial security acceptable to the director of the department of development and environmental services. "Performance

guarantee," "maintenance guarantee" and "defect guarantee" are considered subcategories of financial guarantee.

P. "Flood hazard reduction plan" means a plan and all implementing programs, regulations and procedures including, but not limited to, capital projects, public education activities and enforcement programs for reduction of flood hazards and prepared in accordance with RCW 86.12.200.

Q. "Flow control best management practice" means a method or design for dispersing, infiltrating or otherwise reducing or preventing development-related increases in surface and storm water runoff at, or near, the sources of those increases. "Flow control best management practice" includes the methods and designs specified in the Surface Water Design Manual.

R. "Flow control facility" means a drainage facility designed to mitigate the impacts of increased surface and storm water runoff generated by site development in accordance with the drainage requirements in this chapter. A "flow control facility" is designed either to hold water for a considerable length of time and then release it by evaporation, plant transpiration or infiltration into the ground or to hold runoff for a short period of time and then release it to the conveyance system.

S. "Full drainage review" means the evaluation required by K.C.C. 9.04.030 for any proposed project, unless the project is subject to small project drainage review, targeted drainage review or large project drainage review, that:

1. Would result in two thousand square feet or more of new impervious surface;

2. Would result in thirty-five thousand square feet or more of new pervious surface; or

3. Is a redevelopment project on one or more parcels where the total of new and replaced impervious surface is five thousand square feet or more and when the valuation of proposed improvements exceeds fifty percent of the assessed value of the existing site improvements, including interior improvements and excluding required mitigation and frontage improvements.

T. "High-use site" means a commercial, industrial or road intersection site that generates a higher than average number of vehicle turnovers or has other characteristics that generate the potential for chronic oil accumulation. "High use site" includes:

1. A commercial or industrial site subject to:

a. an expected daily traffic count greater than one hundred vehicles per one thousand square feet of gross building area;

b. petroleum storage or transfer in excess of one thousand gallons per year, not including routine fuel oil storage or transfer; or

c. use, storage or maintenance of a fleet of twenty-five or more diesel vehicles each weighing over ten tons; or

2. A road intersection with average daily traffic counts of twenty-five thousand vehicles or more on the main roadway and fifteen thousand or more vehicles on any intersecting roadway, excluding pedestrian or bicycle use improvement projects.

U. "Hydraulically connected" means connected through surface flow or water features such as wetlands or lakes.

V. "Impervious surface" means a hard surface area that either prevents or retards the entry of water into the soil mantle as under natural conditions before development or that causes water to run off the surface in greater quantities or at an increased rate of flow

130 from the flow present under natural conditions prior to development. Common impervious
131 surfaces include, but are not limited to, roofs, walkways, patios, driveways, parking lots,
132 storage areas, areas that are paved, graveled or made of packed or oiled earthen materials or
133 other surfaces that similarly impede the natural infiltration of surface and storm water. An
134 open uncovered flow control or water quality treatment facility is not an "impervious
135 surface."

136 W. "Improvement" means a permanent, human-made, physical change to land or
137 real property including, but not limited to, buildings, streets, driveways, sidewalks,
138 crosswalks, parking lots, water mains, sanitary and storm sewers, drainage facilities and
139 landscaping.

140 X. "Land disturbing activity" means an activity that results in a change in the
141 existing soil cover, both vegetative and nonvegetative, or to the existing soil topography.
142 "Land disturbing activity" includes, but is not limited to, demolition, construction,
143 clearing, grading, filling, excavation and compaction. "Land disturbing activity" does not
144 include tilling conducted as part of agricultural practices, landscape maintenance or
145 gardening.

146 Y. "Lake management plan" means a plan describing the lake management
147 recommendations and requirements adopted by public rule for managing water quality
148 within individual lake basins.

149 Z. "Large project drainage review" means the evaluation required by K.C.C.
150 9.04.030 for any proposed project that:

151 1. Has an urban plan development land use designation in the King County
152 Comprehensive Plan land use map;

2. Would, at full buildout of the project site, result in fifty acres or more of new impervious surface within a drainage subbasin or a number of subbasins hydraulically connected across subbasin boundaries; or

3. Has a project site of fifty acres or more within a critical aquifer recharge area, as defined in K.C.C. Title 21A.

AA. "Licensed civil engineer" means a person registered with the state of Washington as a professional engineer in civil engineering.

BB. "Maintenance" means those usual activities taken to prevent a decline, lapse or cessation in the use of currently serviceable structures, facilities, equipment or systems, if there is no expansion of the structure, facilities, equipment or system and there are no significant hydrologic impacts. "Maintenance" includes the repair or replacement of nonfunctional facilities or the replacement of existing structures with different types of structures, if the repair or replacement is required by one or more environmental permits or to meet current engineering standards and the functioning characteristics of the original facility or structure are not changed.

CC. "Master drainage plan" means a comprehensive drainage control plan intended to prevent significant adverse impacts to the natural and constructed drainage system, both on- and off-site.

DD.1. "Native vegetated surface" means a surface in which the soil conditions, ground cover and species of vegetation are like those of the original native condition for the site, as more specifically set forth in the Surface Water Design Manual.

EE. "Natural discharge location" means the location where runoff leaves the project site under existing site conditions as defined in the Surface Water Design Manual.

FF. "New impervious surface" means the creation of a hard or compacted surface such as roofs, pavement, gravel or dirt or the addition of a more compacted surface such as the paving of existing dirt or gravel.

GG. "New pervious surface" means the conversion of a native vegetated surface or other native surface to a nonnative pervious surface, including, but not limited to, pasture land, grassland, cultivated land, lawn, landscaping or bare soil or any alteration of existing nonnative pervious surface that results in increased surface and storm water runoff as defined in the Surface Water Design Manual.

HH. "Pollution-generating impervious surface" means an impervious surface considered to be a significant source of pollutants in surface and storm water runoff. "Pollution-generating impervious surface includes those surfaces subject to vehicular use or storage of erodible or leachable materials, wastes or chemicals and that receive direct rainfall or the run-on or blow-in of rainfall. A covered parking area would be included if runoff from uphill could regularly run through it or if rainfall could regularly blow in and wet the pavement surface. Metal roofs are also considered pollution-generating impervious surface unless they are treated to prevent leaching.

II. "Pollution-generating pervious surface" means a nonimpervious surface considered to be a significant source of pollutants in surface and storm water runoff. "Pollution-generating pervious surfaces" include surfaces subject to the use of pesticides and fertilizers, to the use or storage of erodible or leachable materials, wastes or chemicals or to the loss of soil. "Pollution-generating pervious surface includes, but not limited to, the lawn and landscaped areas of a residential or commercial site, golf course, park, sports field and county-standard grassed modular grid pavement.

JJ. "Project" means any proposed action to alter or develop a site that may also require drainage review.

KK. "Project site" means the portion of a site and any offsite areas subject to proposed project activities, alterations and improvements including those required by this chapter.

LL. "Redevelopment project" means a project that proposes to add, replace or modify impervious surface for purposes other than a residential subdivision or maintenance on a site that:

1. Is already substantially developed in a manner that is consistent with its current zoning or with a legal nonconforming use; or

2. Has an existing impervious surface coverage of thirty-five percent or more.

MM. "Replaced impervious surface" means an existing impervious surface proposed to be removed and reestablished as impervious surface, excluding impervious surface removed for the sole purpose of installing utilities or performing maintenance. For purposes of this definition, "removed" includes the removal of buildings down to bare soil or the removal of Portland cement concrete slabs or pavement or asphaltic concrete pavement together with any asphalt-treated base.

NN. "Runoff" means that portion of water originating from rainfall and other precipitation that flows over the surface or just below the surface from where it fell and is found in drainage facilities, rivers, streams, springs, seeps, ponds, lakes, wetlands and shallow groundwater as well as on ground surfaces. For the purpose of this definition, groundwater means all waters that exist beneath the land surface or beneath the bed of any stream, lake or reservoir, or other body of surface water, whatever may be the

222 geological formation or structure in which such water stands or flows, percolates or
223 otherwise moves.
224 OO. "Salmon conservation plan" means a plan and all implementing regulations
225 and procedures including, but not limited to, land use management adopted by ordinance,
226 capital projects, public education activities and enforcement programs for conservation and
227 recovery of salmon within a water resource inventory area designated by the state under
228 WAC 173-500-040.
229 PP. "Shared facility" means a drainage facility designed to meet one or more of the
230 requirements of K.C.C. 9.04.050 for two or more separate projects contained within a
231 basin. Shared facilities usually include shared financial commitments for those drainage
232 facilities.
233 QQ. "Site" means a single parcel, or two or more contiguous parcels that are under
234 common ownership or documented legal control, used as a single parcel for a proposed
235 project for purposes of applying for authority from King County to carry out a proposed
236 project. For projects located primarily within dedicated rights-of-way, "site" includes the
237 entire width of right-of-way subject to improvements proposed by the project.
238 RR. "Small project drainage review" means the drainage review for a proposed
239 single-family residential project or agricultural project that :
240 1. Would result in:
241 a. ten thousand square feet or less of total impervious surface added on or after
242 January 8, 2001; or
243 b. four percent or less of total impervious surface on a site as specified in the
244 Surface Water Design Manual; and

2. Meets the small project drainage requirements specified in the Surface Water Design Manual, including flow control best management practices, erosion and sediment control measures and drainage plan submittal requirements; and

3. Limits new pervious surface as specified in the Surface Water Design Manual.

SS. "Stormwater compliance plan" means a plan or study and all regulations and procedures that have been adopted by the county to implement the plan or study, including, but not limited to, capital projects, public education activities and enforcement programs for managing stormwater quantity and quality discharged from the county's municipal separate storm sewer system in compliance with the National Pollutant Discharge Elimination System permit program under the Clean Water Act.

TT. "Subbasin" means a geographic area that:

1. Drains to a stream or water body named and noted on common maps; and

2. Is contained within the basin of the stream or water body.

UU. "Surface and storm water" means water originating from rainfall and other precipitation that is found on ground surfaces and in drainage facilities, rivers, streams, springs, seeps, ponds, lakes, wetlands and shallow ground water.

VV. "Surface Water Design Manual" means the manual, and supporting documentation referenced or incorporated in the manual, describing surface and storm water design and analysis requirements, procedures and guidance that has been formally adopted by rule under the procedures in K.C.C. chapter 2.98. The Surface Water Design Manual is available from the department of development and environmental services or the department of natural resources and parks, water and land resources division, or their successor agencies.

WW. "Targeted drainage review" means an abbreviated evaluation required by K.C.C. 9.04.030 for certain types of proposed projects that are not subject to full or large project drainage review. Targeted drainage review may be required for some projects in small project drainage review.

XX. "Water quality treatment facility" means a drainage facility designed to reduce pollutants once they are already contained in surface and storm water runoff. A water quality treatment facility is the structural component of best management practices. When used singly or in combination, a water quality treatment facility reduces the potential for contamination of both surface and ground waters.

SECTION 2. Ordinance 9163, Section 3, as amended, and K.C.C. 9.04.030 are each hereby amended to read as follows:

Drainage review – when required – type.

A. Drainage review is required when any proposed project is subject to a King County development permit or approval and:

1. Would result in two thousand square feet or more of new impervious surface;

2. Would involve seven thousand square feet or more of land disturbing activity;

3. Would construct or modify a drainage pipe or ditch that is twelve inches or more in size or depth or receives surface and storm water runoff from a drainage pipe or ditch that is twelve inches or more in size or depth;

4. Contains or is adjacent to a flood hazard area as defined in K.C.C. chapter 21A.24;

5. Is located within a critical drainage area;

6. Is a redevelopment project proposing one hundred thousand dollars or more of improvements to an existing high-use site; or

7. Is a redevelopment project on a site in which the total of new plus replaced impervious surface is five thousand square feet or more and whose valuation of proposed improvements, including interior improvements and excluding required mitigation and frontage improvements, exceeds fifty percent of the assessed value of the existing site improvements.

B. The drainage review for any proposed project shall be scaled to the scope of the project's size, type of development and potential for impacts to the regional surface water system to facilitate preparation and review of project applications. If drainage review for a proposed project is required under subsection A. of this section, the department of development and environmental services shall determine which of the following drainage reviews apply as specified in the Surface Water Design Manual:

1. Small project drainage review;

2. Targeted drainage review;

3. Full drainage review; or

4. Large project drainage review.

SECTION 3. Ordinance 2281, Section 5, as amended, and K.C.C. 9.04.050 are each hereby amended to read as follows:

Drainage review – requirements.

A. A proposed project required to have drainage review by K.C.C. 9.04.030 must meet each of the following core requirements, which are described in detail in the Surface Water Design Manual. Projects subject only to small project drainage review that meet

the small project drainage requirements specified in the Surface Water Design Manual, including flow control best management practices, erosion and sediment control measures and drainage plan submittal requirements are deemed to comply with the following core requirements:

1. Core requirement 1: Discharge at the natural location. All surface and storm water runoff from a project shall be discharged at the natural location so as not to be diverted onto, or away from, downstream properties. The manner in which runoff is discharged from the project site shall not create a significant adverse impact to downhill properties or drainage systems as specified in the discharge requirements of the Surface Water Design Manual;

2. Core requirement 2: Offsite analysis. The initial application submittal for proposed projects shall include an offsite analysis report that assesses potential offsite drainage impacts associated with development of the proposed site and proposes appropriate mitigations to those impacts. This initial submittal shall include, at minimum, a Level One downstream analysis as described in the Surface Water Design Manual. If impacts are identified, the proposed projects shall meet any applicable problem-specific requirements as specified in the Surface Water Design Manual;

3. Core Requirement 3: Flow control. Proposed projects that would result in two thousand square feet or more of new impervious surface or thirty-five thousand square feet or more of new pervious surface, or that are redevelopment projects that would result in a total of five thousand square feet or more of new and replaced impervious surface, shall provide flow control facilities or flow control BMPs, or both, to control surface and storm water runoff generated by-new impervious surface, new

pervious surface, replaced impervious surface and any existing impervious surface added on or after January 8, 2001, as specified in the Surface Water Design Manual. Flow control facilities shall meet the area-specific flow control facility requirements and the flow control facility implementation requirements applicable to the project site as specified in the Surface Water Design Manual. Flow control BMPs shall also be applied as specified in the Surface Water Design Manual. Projects subject to area-specific flow control facility requirements shall meet one of the flow control facility performance criteria listed in a. through c. of this subsection A.3., as directed by the Surface Water Design Manual:

a. Level One shall match the predeveloped site's peak discharge rates for the two-year and ten-year return periods;

b. Level Two shall meet Level One criteria and also match the predeveloped site's discharge durations for the predeveloped peak discharge rates between the fifty percent of the two-year peak flow through the fifty-year peak flow; or

c. Level Three shall meet Level Two criteria and also match the predeveloped site's peak discharge rate for the one hundred-year return period;

4. Core requirement 4: Conveyance system. All engineered conveyance system elements for proposed projects shall be analyzed, designed and constructed to provide the minimum level of protection against overtopping, flooding, erosion and structural failure as specified by the conveyance requirements for new and existing systems and conveyance implementation requirements described in the Surface Water Design Manual;

5. Core requirement 5: Erosion and sediment control. All proposed projects that will clear, grade or otherwise disturb the site shall provide erosion and sediment

control that prevents, to the maximum extent practicable, the transport of sediment from the site to drainage facilities, water resources and adjacent properties. Erosion and sediment controls shall be applied in accordance with K.C.C. chapter 16.82 as specified by the temporary erosion and sediment control measures and performance criteria and implementation requirements in the King County Surface Water Design Manual;

6. Core requirement 6: Maintenance and operation. Maintenance of all drainage facilities in compliance with King County maintenance standards is the responsibility of the applicant or property owner as described in the Surface Water Design Manual, except those facilities for which King County assumes maintenance and operation as described in K.C.C. 9.04.115 and 9.04.120 and the Surface Water Design Manual;

7. Core requirement 7: Financial guarantees and liability. All drainage facilities constructed or modified for projects, except downspout infiltration and dispersion systems for single family residential lots, must comply with the liability requirements of K.C.C. 9.04.100 and the financial guarantee requirements of K.C.C. Title 27A; and

8. Core requirement 8: Water quality. Proposed projects that would result in five thousand square feet or more of new pollution generating impervious surface or thirty-five thousand square feet or more of new pollution-generating pervious surface, or that are redevelopment projects that would result in a total of five thousand square feet or more of new and replaced pollution-generating impervious surface, shall provide water quality treatment facilities to treat polluted surface and storm water runoff generated by new or replaced pollution-generating impervious surface, new pollution-generating

pervious surface and any existing pollution-generating impervious surface added on or after January 8, 2001, as specified in the Surface Water Design Manual. However, pervious surfaces are specifically excluded if there is a good faith agreement with the King Conservation District to implement a farm management plan for agricultural uses, and pervious areas for other uses are specifically excluded if King County department of development and environmental services approves a landscape management plan that controls pesticides and fertilizers leaving the site. Water quality treatment facilities shall meet the area-specific water quality treatment requirements and the water quality implementation requirements applicable to the project site as specified in the Surface Water Design Manual. The facilities specified by these requirements are designed to reduce pollutant loads according to the applicable annual average performance goals listed in a. through d. of this subsection A.8. for ninety-five percent of the annual average runoff volume:

a. for basic water quality: remove eighty percent of the total suspended solids;

b. for enhanced basic water quality: remove fifty percent of the total zinc;

c. for sensitive lake protection: remove fifty percent of the total phosphorus; and

d. sphagnum bog protection: remove fifty percent of the total phosphorus and forty percent of the total nitrate plus nitrite. The discharge shall maintain a pH of less than 6.5 and an alkalinity of less than ten milligrams per liter.

B. A proposed project required by K.C.C. 9.04.030 to have drainage review shall meet any of the following special requirements, which apply to the site and which are described in detail in the Surface Water Design Manual. The department of development

and environmental services shall verify if a proposed project is subject to and must meet any of the following special requirements.

1. Special Requirement 1: Other adopted area-specific requirements. If a proposed project is in a designated critical drainage area, or is in an area included in an adopted master drainage plan, basin plan, salmon conservation plan, stormwater compliance plan, flood hazard reduction plan, lake management plan or shared facility plan, then the proposed project shall meet the applicable drainage requirements of the critical drainage area, master drainage plan, basin plan, salmon conservation plan, stormwater compliance plan, flood hazard reduction plan, lake management plan or shared facility plan;

2. Special Requirement 2: Floodplain/floodway delineation. If a proposed project contains or is adjacent to a stream, lake, wetland or closed depression, or if other King County regulations require study of flood hazards relating to the proposed project, the one hundred year floodplain boundaries and floodway shall be determined and delineated on the site improvement plans and profiles and any final maps prepared for the proposed project. The flood hazard study shall be prepared for as specified in the Surface Water Design Manual;

3. Special Requirement 3: Flood protection facilities. If a proposed project contains or is adjacent to a stream that has an existing flood protection facility, such as a levee, revetment or berm, or proposes to either construct a new or modify an existing flood protection facility, then the flood protection facilities shall be analyzed and designed as specified in the Surface Water Design Manual to conform with the Federal Emergency Management Agency regulations as found in 44 C.F.R.;

4. Special Requirement 4: Source Control. If a proposed project requires a commercial building or commercial site development permit, then water quality source controls shall be applied to prevent rainfall and runoff from coming into contact with pollutants to the maximum extent practicable. Water quality source controls shall be applied in accordance with K.C.C. chapter 9.12, the King County stormwater pollution prevention manual and the Surface Water Design Manual. All structural source controls shall be identified on the site improvement plans and profiles or final maps prepared for the proposed project; and

5. Special Requirement 5: Oil control. If a proposed project is a high-use site or is a redevelopment project proposing one hundred thousand dollars or more of improvements to an existing high-use site, then oil control shall be applied to all runoff from the high-use portion of the site as specified in the Surface Water Design Manual.

C. 1. An adjustment to the requirements contained in this section or other requirements in the Surface Water Design Manual may be proposed. The resulting development shall be subject to all of the remaining terms and conditions of this chapter and the adjustment shall:

a. produce a compensating or comparable result in the public interest, and

b. meet this chapter's objectives of safety, function, appearance, environmental protection and maintainability based upon sound engineering judgment.

2. If complying with subsection C.1.a. of this section will deny all reasonable use of a property, the best practicable alternative shall be obtained as determined by the director of the department of development and environmental services according to the adjustment process defined in the Surface Water Design Manual.

3. Requests for adjustments that may conflict with the requirements of any other King County division shall require review and concurrence with that division.

4. A request for an adjustment is a Type 1 land use decision as provided for in K.C.C. 20.20.060 and shall be processed in accordance with the procedures specified in the Surface Water Design Manual.

5. The county may require monitoring of experimental designs and technology or untested applications proposed by the applicant in order to determine compliance with subsection C.1. of this section and the approved plans and conditions.

6. The applicant may appeal an adjustment decision by following the appeal procedures as specified in the Surface Water Design Manual.

SECTION 4. Ordinance 2281, Section 6, as amended, and K.C.C. 9.04.070 are each hereby amended to read as follows:

Engineering plans for the purposes of drainage review.

A. 1. All engineering plans shall be submitted to the department of development and environmental services for review in accordance with the Surface Water Design Manual except those drainage plans developed by, or under the review of, the department of natural resources and parks for either surface and storm water capital improvement, repair, maintenance or restoration projects or other linear government agency projects, such as roadways, railways, pipelines, utility lines and trails.

2. If engineering plans are returned for any reason, they shall be returned to the applicant.

3. All master drainage plans, if required, shall be submitted to the department of development and environmental services for review in accordance with the specifications

in the Surface Water Design Manual. The master drainage plan process should commence at the same time as the state Environmental Policy Act (SEPA) process.

4. Drainage plans not subject to review by the department of development and environmental services under subsection A.1. of this section shall be reviewed by the department of natural resources and parks in accordance with K.C.C. 9.04.050. Project applicability and compliance with K.C.C. 9.04.050 shall be documented in writing and available for review.

B. The expiration time frames as specified in the Surface Water Design Manual shall apply to all permit and approval applications.

C. All plans shall be processed in accordance with the review procedures specified in the Surface Water Design Manual.

D. All submittal procedures, definitions and specifications for the required contents of engineering plans are presented in the Surface Water Design Manual.

SECTION 5. Ordinance 4938, Section 7, as amended, and K.C.C. 9.04.090 are each hereby amended to read as follows:

Construction timing and final approval.

A. No work related to permanent or temporary storm drainage control for a permitted development may proceed without the approval of the director of the department of development and environmental services.

B. Erosion and sediment control measures associated with both the interim and permanent drainage systems shall be:

1. Constructed in accordance with the approved plan prior to any grading or land clearing other than that associated with an approved erosion and sediment control plan; and

2. Satisfactorily sequenced and maintained until all improvements, restoration, and landscaping associated with the permit and approvals for the project are completed and the potential for onsite erosion has passed.

C. The applicant shall have constructed and have in operation those portions of the drainage facilities necessary to accommodate the control of surface and storm water runoff discharging from the site before the construction of any other improvements or buildings on the site, or to final recording of a plat or short plat, unless upon written request of the applicant, the development engineer authorizes recording before construction of facilities in order to minimize impacts that may result from construction of facilities during inappropriate times of the year.

SECTION 6. Ordinance 10636, Section 3, as amended, and K.C.C. 9.12.015 are each hereby amended to read as follows:

Definitions. The definitions in this section apply throughout this chapter unless the context clearly requires otherwise.

A. "AKART" means "all known, available and reasonable methods of prevention, control and treatment." "AKART" represents the most current methodology that can be reasonably required for preventing, controlling or abating the pollutants associated with a discharge. "AKART" applies to both point and nonpoint sources of pollution.

B. "Best management practices" or "BMPs" mean the best available and reasonable physical, structural, managerial or behavioral activities, that, when used singly

or in combination, eliminate or reduce the contamination of both surface and ground waters.

C. "Chapter" means this chapter and any administrative rules and regulations adopted to implement this chapter.

D. "Clean Water Act" means 33 U.S.C. 1251 et. seq., as amended.

E. "Director" means the director of the King County department of natural resources and parks, other department directors specified in enforcement procedures established in accordance with this chapter, or any designee of those directors.

F. "Discharge" means throw, drain, release, dump, spill, empty, emit or pour forth any matter or cause or allow matter to flow, run or seep from land or be thrown, drained, released, dumped, spilled, emptied, emitted or poured into water.

G. "Drainage facility" has the same meaning as in K.C.C. 9.04.020.

H. "Farm management plan" means a comprehensive site-specific plan developed by the farm owner in cooperation with the King Conservation District taking into consideration the land owners objectives while protecting water quality and related natural resources.

I. "Forest practices" means any activity conducted on or directly pertaining to forest land and relating to growing, harvesting, or processing timber, as defined in chapter 222-16 WAC.

J. "Ground water" means all waters that exist beneath the land surface or beneath the bed of any stream, lake or reservoir or other body of surface water, whatever may be the geological formation or structure in which such water stands or flows, percolates or otherwise moves.

K. "National Pollutant Discharge Elimination System" or "NPDES" means the national program for controlling pollutants from point source discharges directly into waters of the United States under the Clean Water Act.

L. "National Pollutant Discharge Elimination System permit" means an authorization, license or equivalent control document issued by the Environmental Protection Agency or the Washington state Department of Ecology to implement the requirements of the NPDES program.

M. "Person" means an individual and his or her agent or assign, municipality, political subdivision, government agency, partnership, corporation, business or any other entity.

N. "Source control BMP" means a BMP intended to prevent contaminants from entering surface and storm water or ground water including the modification of processes to eliminate the production or use of contaminants. "Source control BMPs" can be either structural or nonstructural. Structural source control BMPs involve the construction of a physical structure on site, or other type of physical modification to a site. An example of a structural source control BMP is building a covered storage area. A nonstructural source control BMP involves the modification or addition of managerial or behavioral practices. An example of a nonstructural source control BMP is using less toxic alternatives to current products or sweeping parking lots.

O. "State Waste Discharge Permit" means an authorization, license, or equivalent control document issued by the Washington state Department of Ecology in accordance with chapter 173-216 WAC.

P. " Stormwater Pollution Prevention Manual" means the manual adopted in accordance with K.C.C. chapter 2.98, and supporting documentation referenced or incorporated in the manual, describing best management practices and procedures for existing facilities and existing and new activities not covered by the Surface Water Design Manual.

Q. "Surface and storm water" has the same meaning as in K.C.C. 9.04.020.

R. "Treatment BMP" means a BMP intended to remove contaminants once they are already contained in storm water. Examples of treatment BMPs include oil/water separators, biofiltration swales and wetponds.

SECTION 7. Ordinance 10636, Section 4, as amended, and K.C.C. 9.12.025 are each hereby amended to read as follows:

Discharges into King County waters.

A. 1. It is unlawful for any person to discharge any contaminants into surface and storm water, ground water or Puget Sound. Contaminants include, but are not limited, to the following:

a. trash or debris;

b. construction materials;

c. petroleum products including but not limited to oil, gasoline, grease, fuel oil, and heating oil;

d. antifreeze and other automotive products;

e. metals in either particulate or dissolved form;

f. flammable or explosive materials;

g. radioactive material;

h. batteries;

i. acids, alkalis, or bases;

j. paints, stains, resins, lacquers or varnishes;

k. degreasers and solvents;

l. drain cleaners;

m. pesticides, herbicides or fertilizers;

n. steam cleaning wastes;

o. soaps, detergents or ammonia;

p. swimming pool backwash;

q. chlorine, bromine and other disinfectants;

r. heated water;

s. domestic animal wastes;

t. sewage;

u. recreational vehicle waste;

v. animal carcasses;

w. food wastes;

x. bark and other fibrous materials;

y. collected lawn clippings, leaves or branches;

z. silt, sediment or gravel;

aa. dyes, except as stated in subsection C.1. of this section;

bb. chemicals not normally found in uncontaminated water;

cc. any hazardous material or waste not listed above.

2. Illicit connections. Any connection identified by the director that could convey anything not composed entirely of surface and storm water directly to surface and storm water or ground water is considered an illicit connection and is prohibited with the following exceptions:

a. connections conveying allowable discharges;

b. connections conveying discharges pursuant to an NPDES permit, other than an NPDES storm water permit, or a State Waste Discharge Permit; and

c. connections conveying effluent from onsite sewage disposal systems to subsurface soils.

B. The following types of discharges shall not be considered prohibited discharges for the purpose of this chapter unless the director determines that the type of discharge, whether singly or in combination with other discharges, is causing significant contamination of surface and storm water or ground water:

1. Potable water;

2. Potable water line flushing;

3. Uncontaminated water from crawl space pumps or footing drains;

4. Lawn watering with potable water or collected rainwater;

5. Residential car and boat washing;

6. Materials placed as part of an approved habitat restoration or bank stabilization project;

7. Natural uncontaminated surface water or ground water;

8. Flows from riparian habitats and wetlands;

9. The following discharges from boats: engine exhaust; cooling waters; effluent from sinks; showers and laundry facilities; and treated sewage from Type I and Type II marine sanitation devices;

10. Prohibited discharges to which BMPs are applied as specified in the Stormwater Pollution Prevention Manual or as determined necessary by the director. Activities that might result in prohibited discharges to which BMPs may be applied include, but are not limited to, residential auto repair and maintenance, residential auto washing, residential hazardous waste handling, residential maintenance and repair, residential solid and food waste handling and residential swimming pool and hot tub maintenance; and

11. Other types of discharges as determined by the director.

C. 1. Dye testing is allowable but requires verbal notification to the King County water and land resources division at least one day prior to the date of test. The King County department of public health is exempt from this requirement.

2. A person does not violate subsection A. of this section if:

a. That person has properly designed, constructed, implemented and is maintaining BMPs and is carrying out AKART as required by this chapter, but contaminants continue to enter surface and storm water or ground water; or

b. That person can demonstrate that there are no additional contaminants being discharged from the site above the background conditions of the water entering the site.

3. A person who, under subsection C.2. of this section, is not in violation of subsection A. of this section is liable for any prohibited discharges through illicit

652 connections, dumping, spills, improper maintenance of BMPs or other discharges that
653 allow contaminants to enter surface and storm water or ground water.
654 4. Emergency response activities or other actions that must be undertaken
655 immediately or within a time too short to allow full compliance with this chapter in order
656 to avoid an imminent threat to public health or safety, shall be exempt from this section.
657 The director by public rule may specify actions that qualify for this exception in county
658 procedures. A person undertaking emergency response activities shall take steps to
659 ensure that the discharges resulting from such activities are minimized. In addition, this
660 person shall evaluate BMPs and the site plan, where applicable, to restrict recurrence.
661 SECTION 8. Ordinance 10636, Section 5, as amended, and K.C.C. 9.12.035 are
662 each hereby amended to read as follows:
663 **Stormwater Pollution Prevention Manual.**
664 A. Compliance with this chapter shall be achieved through the use of the best
665 management practices described in the Stormwater Pollution Prevention Manual. In
666 applying the Stormwater Pollution Prevention Manual, the director shall first require the
667 implementation of source control BMPs. If these are not sufficient to prevent
668 contaminants from entering surface and storm water or ground water, the director may
669 require implementation of treatment BMPs as set forth in AKART. The King County
670 water and land resources division will provide, upon reasonable request, available
671 technical assistance materials and information, and information on outside financial
672 assistance options to persons required to comply with this chapter.
673 B. In applying the Stormwater Pollution Prevention Manual to prohibited
674 discharges from normal residential activities, the director shall use public education and

675 warnings as the primary method of gaining compliance with this chapter and shall not use
676 citations, notice and orders, assessment of civil penalties and fines, or other compliance
677 actions as authorized in K.C.C. 23.02.040, unless the director determines:
678 a. the discharge from a normal residential activity, whether singly or
679 combination with other discharges, is causing a significant contribution of contaminants
680 to surface and storm water or ground water; or
681 b. the discharge from a normal residential activity poses a hazard to the public
682 health, safety or welfare, endangers any property or adversely affects the safety and
683 operation of county right-of-way, utilities or other county-owned or maintained property.
684 C. Persons implementing BMPs through another federal, state or local program
685 will not be required to implement the BMPs prescribed in the county's Stormwater
686 Pollution Prevention Manual, unless the director determines the alternative BMPs are
687 ineffective at reducing the discharge or contaminants. If the other program requires the
688 development of a stormwater pollution prevention plan or other best management
689 practices plan, the person shall make the plan available to King County upon request.
690 Persons who qualify for exemptions include, but are not limited to, persons:
691 1. Required to obtain a general or individual NPDES permit for storm water
692 discharges from the Washington state Department of Ecology;
693 2. Implementing and maintaining, as scheduled, a King Conservation District-
694 approved farm management plan;
695 3. Who have received a permit under a Washington state Department of
696 Ecology NPDES general or individual permit for commercial dairy operations;
697 4. Implementing BMPs in compliance with K.C.C. chapter 21A.30;

5. Implementing BMPs in compliance with the management program of the county's municipal NPDES permit;

6. Engaged in forest practices, with the exception of forest practices occurring on lands platted after January 1, 1960, or on lands being converted to another use or when regulatory authority is otherwise provided to local government by RCW 76.09.240; or

7. Identified by the director as being exempt from this section.

NEW SECTION. SECTION 9. There is hereby added to K.C.C. chapter 9.04 a new section to read as follows:

Vesting period for lots in final short plats. Unless the department finds that a change in conditions creates a serious threat to the public health or safety in the short subdivision, for a period of five years after recording, a lot within a short subdivision shall be governed by the provisions of this chapter in effect at the time a fully completed application for short subdivision approval was filed in accordance with K.C.C. chapter 20.20.

SECTION 10. **Effective date.** This ordinance takes effect January 1, 2005.

SECTION 11. **Severability.** If any provision of this ordinance or its application

714 to any person or circumstance is held invalid, the remainder of the ordinance or the

715 application of the provision to other persons or circumstances is not affected.

716

Ordinance 15052 was introduced on 3/8/2004 and passed as amended by the Metropolitan King County Council on 10/25/2004, by the following vote:

Yes: 7 - Mr. Phillips, Ms. Edmonds, Mr. Pelz, Mr. Ferguson, Mr. Gossett, Ms. Patterson and Mr. Constantine
No: 6 - Mr. von Reichbauer, Ms. Lambert, Mr. McKenna, Mr. Hammond, Ms. Hague and Mr. Irons
Excused: 0

KING COUNTY COUNCIL
KING COUNTY, WASHINGTON

ATTEST:

APPROVED this 5th day of November, 2004.

Attachments None

KING COUNTY, WASHINGTON
SURFACE WATER DESIGN MANUAL

REFERENCE 2

ADOPTED CRITICAL DRAINAGE AREAS

None at this time

None at this time.

KING COUNTY, WASHINGTON
SURFACE WATER DESIGN MANUAL

REFERENCE 3

OTHER ADOPTED AREA SPECIFIC DRAINAGE REQUIREMENTS

3-A RA Zone Clearing Restrictions

TITLE 16 Excerpts (12/04 Draft)

SECTION 14

Clearing standards for individual lots in the rural zone.

A. Except as otherwise provided in this section, in the RA zone the following standards apply to clearing on individual lots:

1. For lots one and one-quarter acre or smaller:

a. clearing shall not exceed the greater of:

(1) the amount cleared before January 1, 2005, or cleared under a complete clearing permit application filed before October 25, 2004, in accordance with previous county regulations;

(2) fifty percent of the lot area; or

(3) seven thousand square feet.

b. any clearing required for the construction of access, utilities and septic systems-shall not be counted towards the amount of clearing allowed under this subsection;

2. For lots greater than one and one-quarter acres and up to fives acres in area, clearing shall not exceed the greater of:

a. the amount legally cleared before January 1, 2005, or cleared under a complete clearing permit application filed before October 25, 2004, in accordance with previous county regulations; or

b. fifty percent of lot area;

3. For lots greater than fives acres, clearing shall not exceed the greater of:

a. the amount legally cleared before January 1, 2005, or cleared under a

complete clearing permit application filed before October 25, 2004, in accordance with previous county regulations;

b. two and one-half acres, or

c. thirty-five percent of lot area; and

4. For lots greater than one and one-quarter acre in either the Bear Creek basin, the Issaquah Creek basin and the May Creek basin, clearing shall not exceed the greater of:

a. the amount legally cleared before January 1, 2005, or cleared under a complete clearing permit application filed before October 25, 2004, in accordance with previous county regulations; or

b. thirty-five percent of lot area;.

B. The standards in subsection A. of this section shall not apply if more restrictive standards apply through:

1. The Critical Areas Code, K.C.C. chapter 21A.24, or its adopted public rules;

2. Property-specific development standards or special district overlays under K.C.C. chapter 21A.38; or

3. Critical drainage area designations identified by adopted public rule

1. If there is an approved and current rural stewardship plan or farm management plan under K.C.C. chapter 21A.24, the maximum amount of clearing allowed under this section is established by the rural stewardship plan or the farm management plan ;

2. Subsection A. of this section does not apply to a lot within a subdivision or

short subdivision:

a. Approved with clearing restrictions in accordance with section 15 of this ordinance; or

b. In the Bear Creek, Issaquah Creek or May Creek basins that was approved with clearing restrictions in accordance with this section as it existed prior to the effective date of this section;

3. On a lot within a subdivision or short subdivision that is not covered by subsection C.2. of this section, any land located in an open space tract created as part of the subdivision or short subdivision shall be credited to the individual lots in the subdivision or short subdivision on a prorated basis according to the size of each lot in relation the entire area of the subdivision or short subdivision;

4. The area within critical areas and critical area buffers, except for critical aquifer recharge areas, may be counted towards meeting the requirements of subsection A. of this section;

5. Clearing in areas encumbered by a utility corridor, or easement for a public road or trail rights-of-way or an access easement shall not be counted toward the cleared area limit;

6. Clearing standards for mining uses shall be determined through the clearing and grading permit review process; and

7. Clearing that is the minimum necessary to provide for the relocation of equestrian community trails shall not be counted towards the cleared area limit.

D. The director may modify or waive subsection A. of this section for a development proposal that meets the following conditions:

1. The development proposal consists of one or more of the following uses:

a. government services listed in K.C.C. 21A.08.060;

b. educational services listed in K.C.C. 21A.08.050;

c. parks as listed in K.C.C. 21A.08.040 when located adjacent to an existing or proposed school;

d. libraries listed in K.C.C. 21A.08.040; and

e. road projects that are not part of a larger development proposal;

2. The development proposal site is not located in a designated regionally significant resource area, except for utility or road corridors for which the applicant demonstrates that there is no feasible alternative or that the development proposal is within an existing maintained corridor. If only a portion of the project is located within a designated regionally significant resource area, this subsection applies to that portion of the project located outside of the designated regionally significant resource area; and

3. To the maximum extent practical, the project locates structures in already cleared areas of the site and clears the minimum necessary to accommodate the proposed use which includes all the allowed ballfields, playfields, other facilities, and spaces proposed by the public agency to carry out its public function

E. The standards of this section shall be established at the time of permit application. The area required to remain uncleared shall be designated on the site plan approved by the department**.**

F. Areas that are required to remain uncleared under this section shall be maintained by the property owner as a resource area. The uses permitted in the resource area shall not prevent the long-term purpose of the resource area to promote forest cover

and shall include uses such as:

1. Except in areas regulated by a source described in subsection B.3. of this section, forest practices in accordance with a county-approved forest management plan;

2. Passive recreation uses and related facilities, including pedestrian, equestrian community and bicycle trails, nature viewing areas, fishing and camping areas, and other similar uses that do not require permanent structures, if:

a. clearing and soil compaction associated with these uses and facilities does not exceed eight percent of the area of the resource area; and

b. within wildlife habitat corridors, trail widths shall be the minimum allowed under adopted trail standards and no other recreation uses shall be permitted in an area of the corridor at least one hundred fifty feet in width;

3. Utilities and utility easements, including surface water facilities, if the facilities are within or adjacent to existing road or utility easements to the maximum extent practical;

4. Pruning or removing hazard trees or removing downed trees;

5. Reducing the danger from wildfire by following best management practices approved by the King County fire marshal;

b. removal of limbs within ten feet of the ground to prevent movement of fire from ground level to treetops; and

c. removal of dead trees or branches overhanging a residence; and

6. Removal of noxious or invasive vegetation.

G. Before approving a development permit application for a parcel that has been cleared in violation of the clearing standards in effect at the time of the clearing, the

department shall require the applicant submit to the department and implement a restoration plan to restore trees, understory vegetation and soil to support and maintain the native vegetative cover on the percentage of the site that was to remain uncleared under this section. If the clearing is in violation of the six-year moratorium on permitting established in K.C.C. 16.82.140, the department may determine whether the restoration plan is sufficient to mitigate for the impacts resulting from the clearing violation.

SECTION 15

Clearing standards for subdivisions and short subdivisions in the rural residential zone.

A. Except as otherwise provided in this section, the following standards apply to clearing allowed in subdivisions and short subdivisions in the RA zone:

1. Clearing shall not exceed thirty-five percent of the area of the subdivision and short subdivision; and

2. The area remaining uncleared shall be:

a. shown on the face of the recorded plat map to delineate where the uncleared area is to remain on each lot; and

b. marked with at least one sign per buildable lot adjoining the area indicating that the area is a permanent resource management area.

B. The standards in subsection A. of this section shall not apply if more restrictive standards apply through:

1. Property-specific development standards pursuant to K.C.C. chapter 21A.38; or

2. Critical drainage area designations identified by adopted administrative rule.

C. If sixty-five percent or more of the site is in critical areas and critical area buffers, this section does not apply.

D. Clearing to provide for the relocation of equestrian community trails shall not be counted towards the cleared area limit.

E. The department may allow an increase in the amount of clearing up to fifty percent of the site area of a subdivision or short subdivision if the area to remain uncleared:

1. Is placed in a separate resource tract that is:

a. separately identified from critical area tracts on the face of the recorded plat map; and

b. retained by the subdivider, conveyed to residents of the subdivision, or conveyed to a third party;

2. Is situated in a manner that minimizes fragmentation of wildlife habitat or that maximizes protection of critical areas and prevention of flooding, erosion, and groundwater impacts based on site characteristics, including topography and soils; and

3. Complies with either of the following:

a. A reforestation plan for the tract is approved and implemented, if the tract has been legally harvested, or

b. One or more of the following habitats is preserved that is not contained within another critical area or critical area buffer:

(1) cave;

(2) old-growth forest;

(3) mature forest;

(4) area that has an abundance of snags;

(5) talus slope;

(6) breeding habitat for a species that the county should protect under the King County Comprehensive Plan;

(7) foraging habitat for any species that the county shall protect or should protect under the King County Comprehensive Plan; or

(8) a vegetated corridor that connects critical areas, priority habitat areas, designated regionally or locally significant resource areas, and other areas of high wildlife value.

F. The approval of a subdivision or short subdivision application for a parcel that has been cleared in violation of the regulations in effect at the time of the clearing shall require the restoration of trees, understory vegetation and soil to support and maintain native vegetation cover on the percentage of the site that was to remain uncleared under this section. The applicant shall submit to the department a restoration plan. If the clearing is in violation of the six-year moratorium on permitting authorized in K.C.C. 16.82.140, the department may determine whether the restoration plan is sufficient to mitigate for the impacts resulting from the clearing violation.

G. The uses permitted within a resource land tract shall be limited as provided in K.C.C. 16.82.150.F.

SECTION 16

Clearing – modification of limits through farm management and rural stewardship plans. The clearing limits of K.C.C. 16.82.150 and section 15 of this ordinance may be modified through a farm management plan or rural stewardship plan approved in accordance with Ordinance 15051, Sections 138 and 139, respectively.

KING COUNTY, WASHINGTON
SURFACE WATER DESIGN MANUAL

REFERENCE 4

OTHER DRAINAGE RELATED REGULATIONS AND GUIDELINES

4-A Grading Code Soil Amendment Standard

4-B Clearing & Grading Seasonal Limitations

4-C Landscape Management Plan Guidelines

4-D Shared Facility Maintenance Responsibility Guidance

TITLE 16 Excerpts (12/04 Draft)

SECTION 10

F. The duff layer and native topsoil shall be retained in an undisturbed state to the maximum extent practicable. Any duff layer or topsoil removed during grading shall be stockpiled on-site in a designated, controlled area not adjacent to public resources and critical areas. The material shall be reapplied to other portions of the site where feasible.

G.1. Except as otherwise provided in subsection G.2. of this section, areas that have been cleared and graded shall have the soil moisture holding capacity restored to that of the original undisturbed soil native to the site to the maximum extent practicable. The soil in any area that has been compacted or that has had some or all of the duff layer or underlying topsoil removed shall be amended to mitigate for lost moisture-holding capacity. The amendment shall take place between May 1 and October 1. Replaced topsoil shall be a minimum of eight inches thick, unless the applicant demonstrates that a different thickness will provide conditions equivalent to the soil moisture holding capacity native to the site. Replaced topsoil shall have an organic matter content of between eight to thirteen percent dry weight and a pH suitable for the proposed landscape plants.

2. This subsection does not apply to areas that:

a. Are subject to a state surface mine reclamation permit; or

b. At project completion are covered by an impervious surface, incorporated into a drainage facility or engineered as structural fill or slope.

TITLE 16 Excerpts Clearing and Grading Seasonal Limitations

SECTION 9

Erosion and sediment control standards – seasonal limitation period.

A. A person who clears, grades or otherwise disturbs a site shall provide erosion and sediment control that prevents, to the maximum extent practicable, the transport of sediment from the site to drainage facilities, water resources and adjacent properties. Erosion and sediment controls shall be applied as specified by the temporary erosion and sediment control measures and performance criteria and implementation requirements in the King County Surface Water Design Manual adopted in accordance with K.C.C. chapter 9.04.

B. From October 1 through April 30, which is the seasonal limitation period, clearing and grading shall only be permitted if shown to the satisfaction of the director that runoff leaving the construction site will comply with the erosion and sediment control measures and performance criteria and implementation requirements in the King County Surface Water Design Manual adopted in accordance with K.C.C. chapter 9.04 through a combination of the following:

1. Site conditions including vegetative coverage, slope, soil type and proximity to receiving waters;

2. Proposed limitations on activities and the extent of disturbed areas; and

3. Proposed erosion and sedimentation control measures.

C. Based on the information provided under subsection A. of this section, the director may expand or restrict the seasonal limitations on site disturbance. The director

shall set forth in writing the basis for approval or denial of clearing or grading during the seasonal limitation period.

D. During the seasonal limitation period, clearing and grading will be allowed only if there is installation and maintenance of an erosion and sedimentation control plan approved by the department that defines any limits on clearing and grading or specific erosion and sediment control measures required during the seasonal limitation period. The department may require or approve alternate best management practices.

E. If, during the course of construction activity or soil disturbance during the seasonal limitation period, silt-laden runoff violating standards in the King County Surface Water Design Manual leaves the construction site or if clearing and grading limits or erosion and sediment control measures shown in the approved plan are not maintained, a citation and stop work order shall be issued in accordance with K.C.C. chapters 23.20 and 23.28, respectively.

F. If the erosion and sediment control problem defined in the citation or stop work order is not adequately repaired within twenty-four hours of issuance, then a notice and order may be issued in accordance with K.C.C. chapter 23.24 to install adequate erosion and sediment control measures to stop silt-laden runoff from leaving the site. The notice and order may also require the property owner to discontinue any further clearing or grading, except for erosion and sediment control maintenance and repair, until the following April 30.

G. The following activities are exempt from the seasonal limitations of this section:

1. Routine maintenance and necessary repair of erosion and sediment control facilities;

2. Routine maintenance of public facilities or existing utility structures that do not expose the soil or result in removal of the vegetative cover to the soil;

3. Activities where there is one hundred percent infiltration of surface water runoff within the site in approved and installed erosion and sedimentation control facilities;

4. Typical landscaping activities of existing single family residences that do not require a permit;

5. Class I, II III and IV special forest practices in accordance with chapter 76.09 RCW;

6. Mineral extraction activities on sites with approved permits; and

7. Response to emergencies that threaten the public health, safety or welfare, consistent with section 6 of this ordinance.

REFERENCE 4-C

Guidelines for preparing a landscape management plan

Landscape management plans have the potential to significantly reduce the pollutant load washing off managed green spaces. For this reason, landscape management plans that incorporate key pollution prevention elements and which are consistently implemented can be used in lieu of water quality treatment facilities (see Section 1.2.8). Submittal requirements for obtaining an approved landscape management plan are given in Chapter 2.

GENERAL CONSIDERATIONS

Studies of pollutant transport have consistently shown that forested lands consistently produce lower pollutant loads—of solids, phosphorus and metals—than do lands used for residential, industrial or agricultural purposes. "Loading" refers to the total weight of a pollutant leaving a particular area or site. It is measured by determining both the concentration of a pollutant and the amount of flow leaving a site. Since the Puget Sound area was largely forested before settlement, lakes and streams in the area have developed biotic regimes in response to this low pollutant loading—clear, cool waters supporting salmon and other aquatic life. When the input of pollutants increases, lakes and streams often shift to a more biologically productive mode, often with a concomitant loss of clear water and a shift or even a decline in fish species.

When forests are converted to cities, this increase in pollutant load needs to be managed in order to maintain the beneficial uses of lakes and streams. One way to manage pollutants is to treat stormwater before it enters a water body. Biofiltration swales, wetponds and sand filters, as well as other facilities, can be used to provide this treatment. Another approach to manage pollutant loads is to prevent the pollutants from entering stormwater in the first place.

Our best models on how to keep nutrients and pollutants from entering storm water are from the original, unaltered landscape—the forests. Forests have a soft, absorptive **duff** layer, as well as **dense vegetative cover**, especially near the ground surface. Nutrients are provided in the form of **slow-release** organic materials, or leaves, needles and woody material. Rainfall **runoff is greatly reduced** from the levels seen in developed landscapes. These factors help to keep the total load of nutrients and sediments transported to receiving waters low.

ELEMENTS OF A SUCCESSFUL LANDSCAPE MANAGEMENT PLAN

Good planning, tailored to the specific conditions of the site, as well as good follow-through, are both essential in controlling the pollutants generated when forests are replaced with lawns, gardens or other landscape features. This section will focus on planning. Follow-through, or implementation, will be discussed in the next section.

I. Plan contents

A landscape management plan for any particular site works best if developed with the specific site characteristics in mind. Soil type, slope, exposure, depth to groundwater as well as the particular suite of plants chosen for the site all should help direct the specific make-up of the plan. However, there are some basic principles that all sites should consider in order to be successful in controlling the export of soil or organic matter, fertilizers and pesticides in stormwater runoff. Landscape management plans should address each of the general principles given in Table 1, tailoring them to fit the specific site situation.

Each of the five basic principles is expanded upon in the following section. The recommendations discussed under each principle are intended as a framework for a variety of site situations, from individual homes to large parks and golf courses. Thus, not every landscape management plan may be able to apply each of the listed recommendations. In addition, landscapes are managed for different purposes, some more formal than others. It may be that some recommendations will not be appropriate for very formal sites and thus not adopted, in favor of other management practices that better fit the uses for which the site is intended. In the end, the extent to which a landscape management plan is successful depends on the ability of the practices chosen to retain soil, fertilizers and pesticides on the site and away from water resources throughout the entire year.

Table 1 Basic principles to reduce pollutant transport from landscaped areas

1	Minimize bare soil areas
2	Reduce water demand
3	Reduce extent of turf area—manage remaining turf for low-impact
4	Choose plants with sustainability in mind
5	Manage fertilizer and pesticide use wisely

Principle 1 Minimize bare soil areas

Bare soil areas are one source of solids that can be mobilized and carried downstream by rainfall. Minimizing bare soil areas makes it less likely that solid particles will be dislodged by rainfall. Some pointers on how to manage landscapes to minimize bare soil are given below.

a) Establish dense plantings of pest-resistant groundcover to shade out weeds. Some easy-care recommendations are rock rose (*Cistus* sp.), snowberry (*Symphoricarpus alba*), salal (*Gaultheria shallon*) and kinnickinick (*Arctostaphylos uva-ursi*).

b) If bare soil areas are required, as in plant beds or ball diamonds, surround the bare area with an area of grass or groundcover to filter out solids that may be picked up by stormwater runoff.

- The denser the grass or groundcover, the better it works to capture solids in runoff.
- Try to make the filtering area as level as possible. Avoid low spots, where runoff can concentrate and create channels.
- In general, filter areas should be about one-fourth as long (along the flow path) as the area contributing low, assuming that slopes are gentle (less than about 10 percent). For flat, level areas without dips, this length can be reduced.

c) Repair promptly bare patches in lawns or groundcovers that could contribute solids to stormwater runoff.

d) Don't place bark or loose mulch on slopes where it can be carried to stormdrains.

Principle 2 Reduce water demand

Reducing the need for irrigation reduces the potential movement of pollutants, conserves water and saves money.

a) Use drought tolerant or native vegetation.

b) Install underground irrigation systems timed to water at night or drip irrigation systems.

c) Increase the organic content of soils to improve water-retention capability.

d) Allow for longer water retention by terracing sloped areas.

Principle 3 Reduce turf area and manage remaining turf for low-impact

Turf requires care to look good. In addition to mowing, turf areas typically require water, fertilizer and weed and disease control. However, some practices can reduce or minimize the amount of chemical controls needed.

a) Amend soil with organic matter to a depth of 8 -12 inches before the lawn is established. Till the organic matter into the native soil.

b) Decide if all lawn area needs the same level of upkeep: let some areas have a less formal look if possible, and reduce fertilizer and pesticide use in those areas.

c) Rely on irrigation and lawn aeration as the primary tools to maintain healthy turf.

d) Remove thatch each year to increase water penetration to grass roots and reduce runoff.

e) Plant groundcovers rather than grass in shady areas. Turf grasses usually need at least partial sun to remain vigorous.

Principle 4 Choose plants with sustainability in mind

Plants differ in their ability to cope with different soils, rainfall conditions, pest and diseases and microclimates. Choosing resilient plant species, plants with adaptations for particular environments or creating optimal microenvironments are all techniques that can be used to create landscapes that require less intervention. Less watering and less need for pesticide and fertilizer application means less potential for pollutants to leave the site.

a) Choose disease resistant plants.

b) Choose drought-resistant groundcovers, shrubs and trees in areas with poor soil or little shading.

c) Group plants in clusters with tree, shrub and groundcover layers to create a better micro-environment and to supply organic matter back to the soil.

d) Include plants in the landscape that are important for beneficial insects such as parasitic wasps. If beneficial insects have nothing to sustain them, they won't stick around to control pests when you need them.

e) Use dense plantings or close spacing to shade out weeds rather than herbicides.

f) Use plants with fibrous roots on steeper slopes or erosion-prone areas. [1] Some good choices include:
   - *New Zealand flax (*Phormium penax*)
   - Ornamental grasses, lawn grasses
   - *Rock rose (*Cistus* sp.)
   - Rosa rugosa
   - Salmonberry (*Rubus spectabilis*) -- native
   - Snowberry (*Symphoricarpus alba*)-- native

   * not hardy in all areas of the County

a) Use wetland plants in areas with seeps or a high water table.

b) Attend to installation details. Write enforceable planting specifications that include details such as soil preparation, plant spacing, plant condition and size, planting depth, transplant handling and irrigation. Inspect the job during planting to prevent short cuts such as blowing the soil mixture around root balls rather than digging the roots into amended native soils.

Principle 5 Manage fertilizer and pesticide use wisely

Many landscape plants and turf simply won't do well without fertilization and some amount of pest management. It's therefore important for landscape management plans to address when and how these actions will be taken.

a) Keep plants healthy by building healthy soil using composted organic material. Healthy plants can better resist diseases and insect pests.

b) Tailor fertilizer make-up to lawn needs. Adjust application rate and timing of fertilizer applications to avoid carry-off in storm runoff.

c) Reduce the phosphorus (P) concentration in fertilizers when possible by using a low phosphorous formulation or formulations containing only nitrogen or potassium. Added phosphorus is often not needed for health foliage growth, only for encouraging profuse blooms.

d) Use an integrated pest management approach to control pests. Keep current about non-chemical controls as a first-defense against pests.

[1] Note that the County's Sensitive Areas Code (21a) defines and protects steep slopes and landslide hazard areas from encroachment. Generally, clearing of vegetation is prohibited in areas with slopes of 40% or more.

e) Encourage a diverse insect community in your landscape: Beneficial insects can help control pests, especially pests of trees and shrubs.
f) Target pesticide application to the specific pest of concern. Avoid pesticide "mixes" targeting generic problems (such as weed and feed) unless you actually need each of the formulations for a current problem.
g) Only apply pesticides during the life-stage when the pest is vulnerable.
h) Use fungicides very sparingly—they disrupt the base of aquatic food webs. If you need to use fungicides, spray formulations with faster break-down times. Consult a golf course management text for information on the attributes of various fungicides (and other pesticides). Balough and Walker, 1992, *Golf course management and construction* by Lewis Publishers is one source of information.
i) Tolerate some weeds.

References

"Weed management for lawns and gardens." Washington Toxics Coalition Fact Sheet, 1989.

"Least toxic lawn management." The BioIntegral Resource Center (BIRC), P.O. Box 7414, Berkeley, CA 94707

Washington State Cooperative Extension publications on lawn care, Bulletin Office, Cooperative Extension, Cooper Publication Building, Washington State University, Pullman, WA 99164-5912

Selected tittles include: "Turf grass diseases" and supplement (EB0713 and EB0713S); "European crane fly"(EB0856); "Fertilizer guide: western Washington" (FG0041); "Disease control in home lawns" (EB0938); "Home lawns" (EB0482).

II Plan implementation

A landscape management plan, no matter how good, will not reduce pollutants in runoff if it is not implemented. And implementation often means that the plan needs to be modified over time, since as plants grow and as the cycle of pests change, the original plan may not fit the site. The following must be addressed before a landscape management plan can be approved.

1. Identify who will be responsible for assuring the management plan is carried out.
2. Identify how the applicant will assure that grounds crews or homeowners have the training and/or resources required to implement the plan and keep up to date on advances in landscape care practices and products.
3. Agree to keep records of fertilizer and pesticide application, including rate of application, area treated and disposal or storage of residue.
4. Agree to certify each year that the landscape management plan for the project in question has been carried out, and that needed amendments or updates have been made.
5. Provide the plan to County maintenance or inspection personnel on request
6. Agree to pay an annual fee (based on time expended) to allow the County to administer the certification process, including review of plans, tracking of information, periodic field inspections and sampling.

REFERENCE 4-D

Shared Drainage Facility Maintenance Responsibility Guidelines

Shared facilities are flow control, conveyance, and/or water quality facilities designed and constructed in accordance with the provisions contained in the 2005 SWDM and which serve more than one project. By this we mean that the facility serves more than one residential subdivision, or may serve a combination of residential, commercial and public projects.

Shared facility policies are contained in the Surface Water Design Manual (SWDM) and K.C.C. 9.04.050. Core Requirement #6 states that "King County may assume maintenance of such facilities serving any mix of developments as part of a shared facilities plan."

Shared facilities must have a plan or agreement which is reviewed and approved by King County. The plan may be developed through the Master Drainage Plan process, or through the plat screening or commercial permit process. WLRD assists in the review of shared facility proposals within the existing support framework in the Adjustment and MDP programs, particularly regarding maintenance issues.

Guidelines for assigning maintenance responsibility

1. Shared facilities that serve only single-family residential projects (more than one subdivision) will be maintained by King County.
2. Shared facilities that serve a combination of residential and commercial projects where more than two-thirds of the developed contributing area served is a mix of single or duplex residential units on individual lots and any public improvements will be maintained by KC.
3. Shared facilities that serve a mix of single family residential, public, and commercial projects where a single commercial project is more than one third of the developed contributing area served will be maintained by the property owner of the single commercial project. The facilities must be located on the commercial property responsible for maintenance or within a tract or easement dedicated to the commercial property responsible for maintenance.
4. If there are two commercial projects which individually are more than one third of the developed contributing area served, the shared facility will be jointly maintained by the two commercial property owners. The facility must be located on one or both of the commercial properties responsible for maintenance or within a tract or easement dedicated to the commercial properties responsible for maintenance.
5. Shared facilities that serve commercial subdivision projects in which no single contributing parcel area is more than one third of the total contributing area served may be maintained by KC. The actual situation should be reviewed by WLRD as part of the shared facility plan review process to determine whether the facility should be maintained by KC.
6. King County may elect to maintain shared facilities where there are unusual circumstances such as where shared facilities are located off and not adjacent to the sites they serve.

KING COUNTY, WASHINGTON
SURFACE WATER DESIGN MANUAL

REFERENCE 5

WETLAND HYDROLOGY PROTECTION GUIDELINES
DOE GUIDE SHEET 2B: GUIDELINES FOR PROTECTION FROM ADVERSE IMPACTS OF MODIFIED RUNOFF QUANTITY DISCHARGED TO WETLANDS

Guide Sheet 2B: Guidelines for Protection from Adverse Impacts of Modified Runoff Quantity Discharged to Wetlands
Excerpted from 2001 DOE Stormwater Manual for Western Washington

1. Protection of wetland plant and animal communities depends on controlling the wetland's **hydroperiod**, meaning the pattern of fluctuation of water depth and the frequency and duration of exceeding certain levels, including the length and onset of drying in the summer. A hydrologic assessment is useful to measure or estimate elements of the hydroperiod under existing **pre-development** and anticipated **postdevelopment** conditions. This assessment should be performed with the aid of a qualified hydrologist. Post-development estimates of watershed hydrology and wetland hydroperiod must include the cumulative effect of all anticipated watershed and wetland modifications. Provisions in these guidelines pertain to the full anticipated build-out of the wetland's watershed.

This analysis hypothesizes a fluctuating water stage over time before development that could fluctuate more, both higher and lower after development; these greater fluctuations are termed **stage excursions**. The guidelines set limits on the frequency and duration of excursions, as well as on overall water level fluctuation, after development. To determine existing hydroperiod use one of the following methods, listed in order of preference:

- Estimation by a continuous simulation computer model—
  The model should be calibrated with at least one year of data taken using a continuously recording level gage under existing conditions and should be run for the historical rainfall period. The resulting data can be used to express the magnitudes of depth fluctuation, as well as the frequencies and durations of surpassing given depths. [Note: Modeling that yields high quality information of the type needed for wetland hydroperiod analysis is a complex subject. Providing guidance on selecting and applying modeling options is beyond the scope of these guidelines but is being developed by King County Surface Water Management Division and other local jurisdictions. An alternative possibility to modeling depths, frequencies, and durations within the wetland is to model durations above given discharge levels entering the wetland over various time periods (e. g., seasonal, monthly, weekly). This option requires further development.]

- Measurement during a series of time intervals (no longer than one month in length) over a period of at least one year of the maximum water stage, using a crest stage gage, and instantaneous water stage, using a staff gage--The resulting data can be used to express water level fluctuation (WLF) during the interval as follows:

  Average base stage = (Instantaneous stage at beginning of interval + Instantaneous stage at end of interval)/2

  WLF = Crest stage - Average base stage

Compute mean annual and mean monthly WLF as the arithmetic averages for each year and month for which data are available.

To forecast future hydroperiod use one of the following methods, listed in order of preference:

- Estimation by the continuous simulation computer model calibrated during pre-development analysis and run for the historical rainfall period—
  The resulting data can be used to express the magnitudes of depth fluctuation, as well as the frequencies and durations of surpassing given depths. [Note: Post-development modeling results should generally be compared with predevelopment modeling results, rather than directly with field measurements, because different sets of assumptions underlie modeling and monitoring. Making pre- and post-development comparisons on the basis of common assumptions allows cancellation of errors inherent in the assumptions.]

- Estimation according to general relationships developed from the Puget Sound Wetlands and Stormwater Management Program Research Program, as follows (in part adapted from Chin 1996):

  – Mean annual WLF is very likely (100% of cases measured) to be < 20 cm (8 inches or 0.7 ft) if total impervious area (TIA) cover in the watershed is < 6% (roughly corresponding to no more than 15% of the watershed converted to urban land use).

  – Mean annual WLF is very likely (89% of cases measured) to be > 20 cm if TIA in the watershed is > 21% (roughly corresponding to more than 30% of the watershed converted to urban land use).

  – Mean annual WLF is somewhat likely (50% of cases measured) to be > 30 cm (1.0 ft) if TIA in the watershed is > 21% (roughly corresponding to more than 30% of the watershed converted to urban land use).

  – Mean annual WLF is likely (75% of cases measured) to be > 30 cm, and somewhat likely (50% of cases measured) to be 50 cm (20 inches or 1.6 ft) or higher, if TIA in the watershed is > 40% (roughly corresponding to more than 70% of the watershed converted to urban land use).

  – The frequency of stage excursions greater than 15 cm (6 inches or 0.5 ft) above or below pre-development levels is somewhat likely (54% of cases measured) to be more than six per year if the mean annual WLF increases to > 24 cm (9.5 inches or 0.8 ft).

– The average duration of stage excursions greater than 15 cm above or below pre-development levels is likely (69% of cases measured) to be more than 72 hours if the mean annual WLF increases to > 20 cm.

2. The following hydroperiod limits characterize wetlands with relatively high vegetation species richness and apply to all zones within all wetlands over the entire year. If these limits are exceeded, then species richness is likely to decline. If the analysis described above forecasts exceedences, one or more of the management strategies listed in step 5 should be employed to attempt to stay within the limits.

- Mean annual WLF (and mean monthly WLF for every month of the year) does not exceed 20 cm. Vegetation species richness decrease is likely with: (1) a mean annual (and mean monthly) WLF increase of more than 5 cm (2 inches or 0.16 ft) if predevelopment mean annual (and mean monthly) WLF is greater than 15 cm, or (2) a mean annual (and mean monthly) WLF increase to 20 cm or more if pre-development mean annual (and mean monthly) WLF is 15 cm or less.

- The frequency of stage excursions of 15 cm above or below predevelopment stage does not exceed an annual average of six. Note: A short-term lagging or advancement of the continuous record of water levels is acceptable. The 15 cm limit applies to the temporary increase in maximum water surface elevations (hydrograph peaks) after storm events and the maximum decrease in water surface elevations (hydrograph valley bottoms) between events and during the dry season.

- The duration of stage excursions of 15 cm above or below predevelopment stage does not exceed 72 hours per excursion.

- The total dry period (when pools dry down to the soil surface everywhere in the wetland) does not increase or decrease by more than two weeks in any year.

- Alterations to watershed and wetland hydrology that may cause perennial wetlands to become **vernal** are avoided.

3. The following hydroperiod limit characterizes **priority peat wetlands** (bogs and fens as more specifically defined by the Washington Department of Ecology) and applies to all zones over the entire year. If this limit is exceeded, then characteristic bog or fen wetland vegetation is likely to decline. If the analysis described above forecasts exceedence, one or more of the management strategies listed in step 5 should be employed to attempt to stay within the limit.

- The duration of stage excursions above the predevelopment stage does not exceed 24 hours in any year.

- Note: To apply this guideline a continuous simulation computer model needs to be employed. The model should be calibrated with data taken under existing conditions at the wetland being analyzed and then used to forecast post-development duration of excursions.

4. The following hydroperiod limits characterize wetlands inhabited by breeding native amphibians and apply to breeding zones during the period 1 February through 31 May. If these limits are exceeded, then amphibian breeding success is likely to decline. If the analysis described above forecasts exceedences, one or more of the management strategies listed in step 5 should be employed to attempt to stay within the limits.

- The magnitude of stage excursions above or below the pre-development stage does not exceed 8 cm, and the total duration of these excursions does not exceed 24 hours in any 30 day period.

- Note: To apply this guideline a continuous simulation computer model needs to be employed. The model should be calibrated with data taken under existing conditions at the wetland being analyzed and then used to forecast post-development magnitude and duration of excursions.

5. If it is expected that the hydroperiod limits stated above could be exceeded, consider strategies such as:

- Reduction of the level of development;

- Increasing runoff infiltration [Note: Infiltration is prone to failure in many Puget Sound Basin locations with glacial till soils and generally requires **pretreatment** to avoid clogging. In other situations infiltrating urban runoff may contaminate groundwater. Consult the stormwater management manual adopted by the jurisdiction and carefully analyze infiltration according to its prescriptions.];

- Increasing runoff storage capacity; and

- Selective runoff bypass.

6. After development, monitor hydroperiod with a continuously recording level gauge or staff and crest stage gauges. If the applicable limits are exceeded, consider additional applications of the strategies in step 5 that may still be available. It is also recommended that goals be established to maintain key vegetation species, amphibians, or both, and that these species be monitored to determine if the goals are being met.

KING COUNTY, WASHINGTON
SURFACE WATER DESIGN MANUAL

REFERENCE 6

HYDROLOGIC/HYDRAULIC DESIGN METHODS

6-A EPA Infiltration Rate Test

6-B Pond Geometry Equations

REFERENCE 6-A

FALLING HEAD PERCOLATION TEST PROCEDURE

REFERENCE SECTION 1-A

FALLING HEAD PERCOLATION TEST PROCEDURE

Source: EPA, Onsite Wastewater Treatment and Disposal Systems, 1980.

Number and Location of Tests
A minimum of three tests shall be performed within the area proposed for an absorption system. They shall be spaced uniformly throughout the area. If soil conditions are highly variable, more tests may be required.

Preparation of Test Hole
The diameter of each test hole is 6 inches, dug or bored to the proposed depths of the absorption systems or to the most limiting soil horizon. To expose a natural soil surface, the sides of the hole are scratched with a sharp pointed instrument and the loose material is removed from the bottom of the test hole. Two inches of ½- to ¾-inch rock are placed in the hole to protect the bottom from scouring when the water is added.

Soaking Period
The hole is carefully filled with at least 12 inches of clear water. The depth of water should be maintained for at least 4 hours and preferably overnight if clay soils are present. A funnel with an attached hose or similar device may be used to prevent water from washing down the sides of the hole. Automatic siphons or float valves may be employed to automatically maintain the water level during the soaking period. It is extremely important that the soil be allowed to soak for a sufficiently long period of time to allow the soil to swell if accurate results are to be obtained.
In sandy soils with little or no clay, soaking is not necessary. If, after filling the hole twice with 12 inches of water, the water seeps completely away in less than ten minutes, the test can proceed immediately.

Measurement of the Percolation Rate
Except for sandy soils, percolation rate measurements are made 15 hours but no more than 30 hours after the soaking period began. Any soil that sloughed in to the hole during the soaking period is removed and the water level is adjusted to 6 inches above the gravel (or 8 inches above the bottom of the hole). At no time during the test is the water level allowed to rise more than 6 inches above the gravel.
Immediately after adjustment, the water level is measured from a fixed reference point to the nearest $1/16^{th}$ inch at 30-minute intervals. The test is continued until two successive water level drops do not vary by more than 1/16 inch within a 90-minute period.
After each measurement, the water level is readjusted to the 6-inch level. The last water level drop is used to calculate the percolation rate.
In sandy soils or soils in which the first 6-inch of water added after the soaking period seeps away in less than 30 minutes, water level measurements are made at 10-minute intervals for a 1-hour period. The last

water level drop is used to calculate the percolation rate.

Calculation of the Percolation Rate

The percolation rate is calculated for each test hole by dividing the time interval used between measurements by the magnitude of the last water level drop. This calculation results in a percolation rate in terms of minutes/inch. To determine the percolation rate for the area, the rates obtained from each hole are averaged. (If tests in the area vary by more than 20 minutes/inch, variations in soil type are indicated. Under these circumstances, percolation rates should not be averaged.)

Example: If the last measured drop in water level after 30 minutes is 5/8-inch, then:

Percolation rate = (30 minutes)/(5/8 inch) = 48 minutes/inch.

REFERENCE 6-A

SINGLE-RING PERCOLATION TEST PROCEDURE

Preparation for Test

A single ring made of steel or other durable material a minimum of 3 feet in diameter and a minimum of 6 inches high and an adequate supply of clear water is needed. Tests must be performed in undisturbed native soil in a suitable locations to determine soil percolation rates for the proposed infiltration facility. The surface of the soil where the test is to be run must be accurately leveled and the ring imbedded and sealed in the soil to prevent water from running under the ring and onto the surface.

Soaking Period

The ring shall be carefully filled with at least 6 inches of clear water. The depth of water should be maintained for at least 4 hours and preferably overnight if fine-grained soils are present. Automatic siphons or float valves may be employed to automatically maintain the water level during the soaking period. It is extremely important that the soil be allowed to soak for a sufficiently long period of time to allow the soil to swell if accurate results are to be obtained.

In sandy soils with little or no fines, soaking is not necessary. If, after filling the ring twice with 6 inches of water, the water seeps completely away in less than ten minutes, the test can proceed immediately.

Measurement of the Percolation Rate

Except for sandy soils, percolation rate measurements are made 15 hours but no more than 30 hours after the soaking period began. The water level is adjusted to 6 inches above the soil surface and successive measurements are taken to determine the percolation rate. At no time during the test is the water level allowed to rise more than 6 inches above the soil surface.

Immediately after adjustment, the water level is measured from a fixed reference point to the nearest $1/16^{th}$ inch at 30-minute intervals. The test is continued until two successive water level drops do not vary by more than 1/16 inch within a 90-minute period. After each measurement, the water level is readjusted to the 6-inch level. The last water level drop is used to calculate the percolation rate.

In sandy soils or soils in which the first 6-inch of water added after the soaking period seeps away in less than 30 minutes, water level measurements are made at 10-minute intervals for a 1-hour period. The last water level drop is used to calculate the percolation rate.

Calculation of the Percolation Rate

The percolation rate is calculated for each test by dividing the time interval used between measurements by the magnitude of the last water level drop. This calculation results in a percolation rate in terms of minutes/inch. To determine the percolation rate for the area, the rates obtained from each hole are averaged.

Example: If the last measured drop in water level after 30 minutes is 5/8-inch, then:

Percolation rate = (30 minutes)/(5/8 inch) = 48 minutes/inch.

Reference Section 6-B

Pond Geometry Calculations

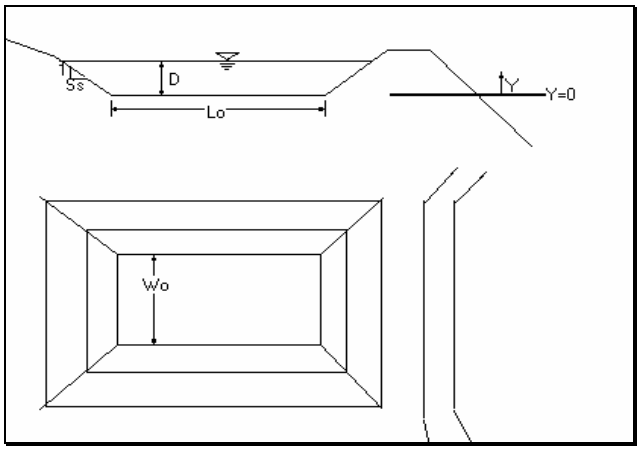

<Known>

Volume	(V)
Pond Depth	(D)
Side Slope	(S_S)
Length-to-Width Ratio	(R)

<Find>

Bottom Area of Rectangular Pond

<Solution>

Y = depth of section measured from bottom, from zero to D
W_0= width at pond bottom

The pond width (W) at any depth, Y

$$W_Y = W_0 + 2S_S Y \qquad \text{Eq. 1}$$

The pond length (L) at any depth, Y

$$L_Y = RW_0 + 2S_S Y \qquad \text{Eq. 2}$$

The pond area at any depth, Y

$$A_Y = L_Y W_Y = (RW_0 + 2S_S Y)(W_0 + 2S_S Y) \qquad \text{Eq. 3}$$

or,

$$A_Y = RW_0^2 + (R+1)2W_0 S_S Y + 4S_S^2 Y^2 \qquad \text{Eq. 4}$$

The equation for the pond-full volume (V) is obtained by integrating between Y=0 and Y=D

$$V = \int_0^D \left(RW_0^2 + (R+1)2W_0 S_S Y + 4S_S^2 Y^2 \right) dY \qquad \text{Eq. 5}$$

or,

$$V = \left[RW_0^2 Y + (R+1)W_0 S_S Y^2 + \frac{4}{3} S_S^2 Y^3 \right]\Bigg|_0^D \qquad \text{Eq. 6}$$

or,

$$V = RDW_0^2 + S_S D^2 (R+1)W_0 + \frac{4}{3} S_S^2 D^3 \qquad \text{Eq. 7}$$

Where

V =	Volume of rectangular pond	R =	Length-to-width ratio
D =	Depth	Ss =	Side Slope
W_0 =	Bottom width		

Rearrange equation to solve for W_0 using quadratic equation, $0 = ax^2 + bx + c$

$$0 = RDW_0^2 + S_S D^2 (R+1)W_0 + \frac{4}{3} S_S^2 D^3 - V \qquad \text{Eq. 8}$$

Use Quadratic Equation to solve for positive solution of W_0, $x = \dfrac{-b \pm \sqrt{b^2 - 4ac}}{2a}$

$$W_0 = \frac{-S_S D^2 (R+1) \pm \sqrt{\left[S_S D^2 (R+1)\right]^2 - 4RD\left(\frac{4}{3} S_S^2 D^3 - V\right)}}{2RD} \qquad \text{Eq. 9}$$

Use Equation 2 for Length of pond at Y=0,
$L_0 = RW_0$

Use Equation 3 for Area of pond at Y=0,
$A_O = L_0 W_0 = RW_0^2$

KING COUNTY, WASHINGTON
SURFACE WATER DESIGN MANUAL

REFERENCE 7

ENGINEERING PLAN SUPPORT

7-A King County Standard Map Symbols

7-B Standard Plan Notes and Example Construction Sequence

KING COUNTY
STANDARD PLAN NOTES

The standard plan notes must be included on all engineering plans. Notes which in no way apply to the project may be omitted; however, the remaining notes must not be renumbered. For example, if General Note #3 were omitted, the remaining notes should remain numbered 1, 2, 4, 5, 6, etc.

GENERAL NOTES

(1) All design and construction shall be in accordance with permit conditions, the King County Code (KCC), Road Standards (KCRS), Washington State DOT (WSDOT) Standard Specifications and the conditions of preliminary approval. It shall be the sole responsibility of the applicant and the professional civil engineer to correct any error, omission, or variation from the above requirements found in these plans. All corrections shall be at no additional cost or liability to King County.

(2) The design elements within these plans have been reviewed according to the King County Department of Development and Environmental Services (DDES) Engineering Review checklist. Some elements may have been overlooked or missed by the DDES plan reviewer. Any variance from adopted standards is not allowed unless specifically approved by King County prior to construction.

(3) Approval of this road, grading, parking and drainage plan does not constitute an approval of any other construction (e.g. domestic water conveyance, sewer conveyance, gas, electrical, etc.)

(4) Before any construction or development activity, a preconstruction meeting must be held between the DDES's Land Use Inspection Section, the Applicant, and the Applicant's Construction Representative.

(5) A copy of these approved plans must be on the job site whenever construction is in progress.

(6) Grading activities (site alteration) are limited to the hours of 7 a.m. to 7 p.m. Monday through Saturday and 10 a.m. to 5 p.m. on Sunday, unless otherwise approved with a written decision by the Reviewing Agency.

(7) It shall be the applicant's/contractor's responsibility to obtain all construction easements necessary before initiating off-site work. Easements require review and approval prior to construction.

(8) Franchised utilities or other installations that are not shown on these approved plans shall not be constructed unless an approved set of plans that meet all requirements of KCRS Chapter 8 are submitted to the DDES's Land Use Inspection Section three days prior to construction.

(9) Datum shall be KCAS unless otherwise approved by DDES.

(10) Dewatering system (underdrain) construction shall be within a right-of-way or appropriate drainage easement, but not underneath the roadway section. All underdrain systems must be constructed in accordance with WSDOT Standard Specifications.

(11) All utility trenches and roadway subgrade shall be backfilled and compacted to 95 percent density, standard proctor.

(12) Open cutting of existing roadways for non-franchised utility or storm work is not allowed unless specifically approved by DDES and noted on these approved plans. Any open cut shall be restored in accordance with KCRS.

(13) The Contractor shall be responsible for providing adequate safeguards, safety devices, protective equipment, flaggers, and any other needed actions to protect the life, health, and safety of the public, and to protect property in connection with the performance of work covered by the contractor. Any work within the traveled right-of-way that may interrupt normal traffic flow shall require at least one flagger for each lane of traffic affected. Manual on Uniform Traffic Control Devices (MUTCD) shall apply. Work in right-of-way is not authorized until a traffic control plan is approved by King County.

DRAINAGE NOTES

(1) Proof of liability insurance shall be submitted to DDES prior to the construction of the drainage facilities, preferably at the preconstruction meeting.

(2) All pipe and appurtenances shall be laid on a properly prepared foundation in accordance with WSDOT specifications. This shall include leveling and compacting the trench bottom, the top of the foundation material, and any required pipe bedding, to a uniform grade so that the entire pipe is supported by a uniformly dense unyielding base.

(3) Steel pipe shall be aluminized, or galvanized with asphalt treatment #1 or better inside and outside.

(4) All drainage structures, such as catch basins and manholes, not located within a traveled roadway or sidewalk, shall have solid locking lids. All drainage structures associated with a permanent retention/detention facility shall have solid locking lids.

(5) All catch basin grates shall conform to KCRS, which includes the stamping "OUTFALL TO STREAM, DUMP NO POLLUTANTS" and "Property of King County", except that private drainage systems shall not have the words “Property of King County”.

(6) All driveway culverts located within King County right-of-way shall be of sufficient length to provide a minimum 3:1 slope from the edge of the driveway to the bottom of the ditch. Culverts shall have beveled end sections to match the side slope KCRS.

(7) Rock for erosion protection of roadway ditches, where required, must be of sound quarry rock, placed to a depth of 1 foot, and must meet the following specifications: 4"-8"/40%-70% passing; 2"- 4" rock/30%-40% passing; and -2" rock/10%-20% passing. Installation shall be in accordance with KCRS.

(8) Drainage outlets (stub-outs) shall be provided for each individual lot, except for those lots approved for infiltration by King County. Stub-outs shall conform to the following:

a) Each outlet shall be suitably located at the lowest elevation on the lot, so as to service all future roof downspouts and footing drains, driveways, yard drains, and any other surface or subsurface drains necessary to render the lots suitable for their intended use. Each outlet shall have free-flowing, positive drainage to an approved stormwater conveyance system or to an approved outfall location.

b) Outlets on each lot shall be located with a five-foot-high, 2" x 4" stake marked "storm" or "drain". The stub-out shall extend above surface level, be visible, and be secured to the stake.

c) Pipe material shall conform to underdrain specifications described in KCRS and, if non-metallic, the pipe shall contain wire or other acceptable detection.

d) Drainage easements are required for drainage systems designed to convey flows through individual lots.

e) The applicant/contractor is responsible for coordinating the locations of all stub-out conveyance lines with respect to the utilities (e.g. power, gas, telephone, television).

f) All individual stub-outs shall be privately owned and maintained by the lot home owner.

(9) All disturbed pervious areas (compacted, graded, landscaped, etc.) of the development site must demonstrate one of the following: The existing duff layer shall be staged and redistributed to maintain the moisture capacity of the soil, OR; Amended soil shall be added to maintain the moisture capacity.

(10) Seasonal clearing is limited between October 1 and March 30 inclusive, unless otherwise approved with a written decision by the Reviewing Agency.

(11) Improvements and/or buildings shall not be installed until drainage facilities are “in operation”, (KCC 9.04).

EROSION AND SEDIMENTATION CONTROL NOTES

(1) Approval of this erosion and sedimentation control (ESC) plan does not constitute an approval of permanent road or drainage design (e.g. size and location of roads, pipes, restrictors, channels, retention facilities, utilities, etc.)

(2) The implementation of these ESC plans and the construction, maintenance, replacement, and upgrading of these ESC facilities is the responsibility of the applicant/ESC supervisor until all construction is approved.

(3) The boundaries of the clearing limits shown on this plan shall be clearly flagged by survey tape or fencing, if required, prior to construction (SWDM Appendix D). During the construction period, no disturbance beyond the clearing limits shall be permitted. The clearing limits shall be maintained by the applicant/ESC supervisor for the duration of construction.

(4) Stabilized construction entrances shall be installed at the beginning of construction and maintained for the duration of the project. Additional measures, such as constructed wheel wash systems or wash pads, may be required to ensure that all paved areas are kept clean and track out to road right of way does not occur for the duration of the project.

(5) The ESC facilities shown on this plan must be constructed prior to or in conjunction with all clearing and grading so as to ensure that the transport of sediment to surface waters, drainage systems, and adjacent properties is minimized.

(6) The ESC facilities shown on this plan are the minimum requirements for anticipated site conditions. During the construction period, these ESC facilities shall be upgraded as needed for unexpected storm events and modified to account for changing site conditions (e.g. additional cover measures, additional sump pumps, relocation of ditches and silt fences, perimeter protection etc.).

(7) The ESC facilities shall be inspected daily by the applicant/ESC supervisor and maintained to ensure continued proper functioning. Written records shall be kept of weekly reviews of the ESC facilities.

(8) Any areas of exposed soils, including roadway embankments, that will not be disturbed for two days during the wet season or seven days during the dry season shall be immediately stabilized with the approved ESC cover methods (e.g., seeding, mulching, plastic covering, etc.).

(9) Any area needing ESC measures, not requiring immediate attention, shall be addressed within seven (7) days.

(10) The ESC facilities on inactive sites shall be inspected and maintained a minimum of once a month or within 24 hours following a storm event.

(11) At no time shall more than one (1) foot of sediment be allowed to accumulate within a catch basin. All catch basins and conveyance lines shall be cleaned prior to paving. The cleaning operation shall not flush sediment-laden water into the downstream system.

(12) Any permanent retention/detention facility used as a temporary settling basin shall be modified with the necessary erosion control measures and shall provide adequate storage capacity. If the permanent facility is to function ultimately as an infiltration system, the temporary facility must be rough graded so that the bottom and sides are at least three feet above the final grade of the permanent facility.

(13) Cover measures will be applied in conformance with Appendix D of the Surface Water Design Manual.

(14) Prior to the beginning of the wet season (Oct. 1), all disturbed areas shall be reviewed to identify which ones can be seeded in preparation for the winter rains. Disturbed areas shall be seeded within one week of the beginning of the wet season. A sketch map of those areas to be seeded and those areas to remain uncovered shall be submitted to the DDES inspector for review.

STRUCTURAL NOTES

(1) These plans are approved for standard road and drainage improvements only. Plans for structures such as bridges, vaults, and retaining walls require a separate review and approval by DDES prior to construction (KCC 16.04. 16.70, 14.20).

(2) Rockeries are considered to be a method of bank stabilization and erosion control. Rockeries shall not be constructed to serve as retaining walls. All rockeries in County road right-f-way shall be constructed in accordance with KCRS. Rockeries outside of road right-f-way shall be constructed in accordance with the International Building Code.

EROSION AND SEDIMENT CONTROL RECOMMENDED CONSTRUCTION SEQUENCE

(1) Pre-construction meeting.
(2) Post sign with name and phone number of ESC supervisor (may be consolidated with the required notice of construction sign).
(3) Flag or fence clearing limits.
(4) Install catch basin protection if required.
(5) Grade and install construction entrance(s).
(6) Install perimeter protection (silt fence, brush barrier, etc.).
(7) Construct sediment ponds and traps.
(8) Grade and stabilize construction roads.
(9) Construct surface water controls (interceptor dikes, pipe slope drains, etc.) simultaneously with clearing and grading for project development.
(10) Maintain erosion control measures in accordance with King County standards and manufacturer's recommendations.
(11) Relocate erosion control measures or install new measures so that as site conditions change the erosion and sediment control is always in accordance with the King County Erosion and Sediment Control Standards.
(12) Cover all areas that will be unworked for more than seven days during the dry season or two days during the wet season with straw, wood fiber mulch, compost, plastic sheeting or equivalent.
(13) Stabilize all areas that reach final grade within seven days.
(14) Seed or sod any areas to remain unworked for more than 30 days.
(15) Upon completion of the project, all disturbed areas must be stabilized and BMPs removed if appropriate.

KING COUNTY, WASHINGTON
SURFACE WATER DESIGN MANUAL

REFERENCE 8

PLAN REVIEW FORMS AND WORKSHEETS

8-A Technical Information Report (TIR) Worksheet

8-B Offsite Analysis Drainage System Table

8-C Water Quality Facility Sizing Worksheets

8-D Flow Control and Water Quality Facility Summary Sheet and Sketch

8-E CSWPPP Worksheet Forms

8-F Adjustment Application Form and Process Guidelines

8-G Dedication and Indemnification Clause - Final Recording

8-H Bond Quantities Worksheet

8-I Maintenance and Defect Agreement

8-J Declaration of Covenant

8-K Drainage Release Covenant

8-L Drainage Easement

8-M Flow Control BMP Covenant

8-N Impervious Surface Limit Covenant

8-O Clearing Limit Covenant, and

8-P River Protection Easement

KING COUNTY, WASHINGTON
SURFACE WATER DESIGN MANUAL

REFERENCE 8-A

TECHNICAL INFORMATION REPORT (TIR) WORKSHEET

TECHNICAL INFORMATION REPORT (TIR) WORKSHEET

Part 1 PROJECT OWNER AND PROJECT ENGINEER

Project Owner _____

Phone _____

Address _____

_____

Project Engineer _____

Company _____

Phone _____

Part 2 PROJECT LOCATION AND DESCRIPTION

Project Name _____

DDES Permit # _____

Location Township _____

Range _____

Section _____

Site Address _____

_____

Part 3 TYPE OF PERMIT APPLICATION

- ❑ Landuse Services
  Subdivison / Short Subd. / UPD
- ❑ Building Services
  M/F / Commerical / SFR
- ❑ Clearing and Grading
- ❑ Right-of-Way Use
- ❑ Other _____

Part 4 OTHER REVIEWS AND PERMITS

- ❑ DFW HPA
- ❑ COE 404
- ❑ DOE Dam Safety
- ❑ FEMA Floodplain
- ❑ COE Wetlands
- ❑ Other _____
- ❑ Shoreline Management
- ❑ Structural Rockery/Vault/_____
- ❑ ESA Section 7

Part 5 PLAN AND REPORT INFORMATION

Technical Information Report		**Site Improvement Plan (Engr. Plans)**	
Type of Drainage Review (circle):	Full / Targeted / Large Site	Type (circle one):	Full / Modified / Small Site
Date (include revision dates):	_____ _____	Date (include revision dates):	_____ _____
Date of Final:	_____	Date of Final:	_____

Part 6 ADJUSTMENT APPROVALS

Type (circle one): Standard / Complex / Preapplication / Experimental / Blanket

Description: (include conditions in TIR Section 2)

_____

_____

_____

Date of Approval: _____

TECHNICAL INFORMATION REPORT (TIR) WORKSHEET

Part 7 MONITORING REQUIREMENTS

Monitoring Required: Yes / No

Start Date: _____

Completion Date: _____

Describe: _____

Part 8 SITE COMMUNITY AND DRAINAGE BASIN

Community Plan : _____

Special District Overlays: _____

Drainage Basin: _____

Stormwater Requirements: _____

Part 9 ONSITE AND ADJACENT SENSITIVE AREAS

- ❑ River/Stream _____
- ❑ Lake _____
- ❑ Wetlands _____
- ❑ Closed Depression _____
- ❑ Floodplain _____
- ❑ Other _____
- ❑ Steep Slope _____
- ❑ Erosion Hazard _____
- ❑ Landslide Hazard _____
- ❑ Coal Mine Hazard _____
- ❑ Seismic Hazard _____
- ❑ Habitat Protection _____
- ❑ _____

Part 10 SOILS

Soil Type	Slopes	Erosion Potential
_____	_____	_____
_____	_____	_____
_____	_____	_____
_____	_____	_____

- ❑ High Groundwater Table (within 5 feet)
- ❑ Other _____
- ❑ Sole Source Aquifer
- ❑ Seeps/Springs

❑ Additional Sheets Attached

TECHNICAL INFORMATION REPORT (TIR) WORKSHEET

Part 11 DRAINAGE DESIGN LIMITATIONS	
REFERENCE	LIMITATION / SITE CONSTRAINT
❑ Core 2 – Offsite Analysis	_____
❑ Sensitive/Critical Areas	_____
❑ SEPA	_____
❑ Other	_____
❑ _____	_____
❑ Additional Sheets Attached	

Part 12 TIR SUMMARY SHEET (provide one TIR Summary Sheet per Threshold Discharge Area)	
Threshold Discharge Area: (name or description)	
Core Requirements (all 8 apply)	
Discharge at Natural Location	Number of Natural Discharge Locations:
Offsite Analysis	Level: 1 / 2 / 3 dated:_____
Flow Control (incl. facility summary sheet)	Level: 1 / 2 / 3 or Exemption Number _____ Small Site BMPs _____
Conveyance System	Spill containment located at: _____
Erosion and Sediment Control	ESC Site Supervisor: Contact Phone: After Hours Phone:
Maintenance and Operation	Responsibility: Private / Public If Private, Maintenance Log Required: Yes / No
Financial Guarantees and Liability	Provided: Yes / No
Water Quality (include facility summary sheet)	Type: Basic / Sens. Lake / Enhanced Basicm / Bog or Exemption No. _____ Landscape Management Plan: Yes / No
Special Requirements (as applicable)	
Area Specific Drainage Requirements	Type: CDA / SDO / MDP / BP / LMP / Shared Fac. / None Name: _____
Floodplain/Floodway Delineation	Type: Major / Minor / Exemption / None 100-year Base Flood Elevation (or range): _____ Datum:
Flood Protection Facilities	Describe:
Source Control (comm./industrial landuse)	Describe landuse: Describe any structural controls:

TECHNICAL INFORMATION REPORT (TIR) WORKSHEET

Oil Control	High-use Site: Yes / No Treatment BMP: _____ Maintenance Agreement: Yes / No with whom? _____
Other Drainage Structures	
Describe:	

Part 13 EROSION AND SEDIMENT CONTROL REQUIREMENTS		
MINIMUM ESC REQUIREMENTS DURING CONSTRUCTION		MINIMUM ESC REQUIREMENTS AFTER CONSTRUCTION
❑ Clearing Limits		❑ Stabilize Exposed Surfaces
❑ Cover Measures		❑ Remove and Restore Temporary ESC Facilities
❑ Perimeter Protection		❑ Clean and Remove All Silt and Debris Ensure Operation of Permanent Facilities
❑ Traffic Area Stabilization		❑ Flag Limits of SAO and open space preservation areas
❑ Sediment Retention		❑ Other _____
❑ Surface Water Control		
❑ Dust Control		
❑ Construction Sequence		

Part 14 STORMWATER FACILITY DESCRIPTIONS (Note: Include Facility Summary and Sketch)				
Flow Control	Type/Description		Water Quality	Type/Description
❑ Detention	_____		❑ Biofiltration	_____
❑ Infiltration	_____		❑ Wetpool	_____
❑ Regional Facility	_____		❑ Media Filtration	_____
❑ Shared Facility	_____		❑ Oil Control	_____
❑ Small Site BMPs	_____		❑ Spill Control	_____
❑ Other	_____		❑ Small Site BMPs	_____
			❑ Other	_____

TECHNICAL INFORMATION REPORT (TIR) WORKSHEET

Part 15 EASEMENTS/TRACTS		Part 16 STRUCTURAL ANALYSIS
❑ Drainage Easement ❑ Access Easement ❑ Native Growth Protection Covenant ❑ Tract ❑ Other		❑ Cast in Place Vault ❑ Retaining Wall ❑ Rockery > 4' High ❑ Structural on Steep Slope ❑ Other

Part 17 SIGNATURE OF PROFESSIONAL ENGINEER
I, or a civil engineer under my supervision, have visited the site. Actual site conditions as observed were incorporated into this worksheet and the attached Technical Information Report. To the best of my knowledge the information provided here is accurate. *Signed/Date*

KING COUNTY, WASHINGTON
SURFACE WATER DESIGN MANUAL

REFERENCE 8-B

OFFSITE ANALYSIS
DRAINAGE SYSTEM TABLE

OFF-SITE ANALYSIS DRAINAGE SYSTEM TABLE
SURFACE WATER DESIGN MANUAL, CORE REQUIREMENT #2

Basin: **Subbasin Name:** **Subbasin Number:**

Symbol	Drainage Component Type, Name, and Size	Drainage Component Description	Slope	Distance from site discharge	Existing Problems	Potential Problems	Observations of field inspector, resource reviewer, or resident
see map	Type: sheet flow, swale, stream, channel, pipe, pond; Size: diameter, surface area	drainage basin, vegetation, cover, depth, type of sensitive area, volume	%	¼ ml = 1,320 ft.	constrictions, under capacity, ponding, overtopping, flooding, habitat or organism destruction, scouring, bank sloughing, sedimentation, incision, other erosion		tributary area, likelihood of problem, overflow pathways, potential impacts

KING COUNTY, WASHINGTON
SURFACE WATER DESIGN MANUAL

REFERENCE 8-C

WATER QUALITY FACILITY SIZING WORKSHEETS

BIOFILTRATION SWALE WORKSHEET
2005 Surface Water Design Manual Sizing Method

Project: _____

METHODS OF ANALYSIS (Section 6.3.1.1)

Step 1) Calculate design flows

Biofiltration swales generally precede other water quality facilities (See menus in 6.1)

Design flows depend on sequence with detention facility. (Section 6.2.1)

Preceding detention	Qwq = 60% 2-yr, developed, KCRTS flow with 15-min time step
Following detention	Qwq = 2-yr release rate from detention facility

If no high flow bypass	$Q_{100\text{-}yr}$	_____	(cfs)	High flows bypass or flow through (6.3.1.1)
	$Q_{25\text{-}yr}$	_____	(cfs)	See 3.2.2 KCRTS/Runoff files Method
	$Q_{2\text{-}yr}$	_____	(cfs)	"
Water quality design flow	Q_{wq}	_____	(cfs)	"

Rainfall Region: Seatac or Landsburg?	_____		See Figure 3.2.2.A
Soil Type: Till or outwash?	_____		See Table 3.2.2 B
Forest	_____	(acres)	Areas draining to swale (3.2.2)
Pasture	_____	(acres)	"
Grass	_____	(acres)	"
Wetland	_____	(acres)	"
Impervious	_____	(acres)	"
Scale Factor:	_____		See Figure 3.2.2.A
Time Step: 15-min	*15-min*		Required "15 min" (6.2.1)
Data Type: Reduced or historic?	_____		Recommend "Reduced" (3.2.2.1)

Step 2) Calculate swale bottom width

$$b = \frac{Q_{wq}\, n_{wq}}{1.49\, y^{1.67}\, s^{0.5}}$$

b=	bottom width of swale	_____	(ft)	Simplified Manning's formula
Q_{wq}=	water quality design flow	_____	(cfs)	Calculated in Step 1
n_{wq} =	Manning's roughness coefficient	*0.20*		Required 0.20
y =	design flow depth	_____	(ft)	Mowed 2 in. (0.17ft), Rural 4 in. (0.33ft)
s =	longitudinal slope, along flow	_____	(feet/ft)	

If the bottom width is calculated to be between 2 and 10 feet, proceed to Step 3.
If bottom width is less than 2 feet, increase width to 2 feet and recalculate the design flow depth (y).
If bottom width is more than 10 feet: increase longitudinal slope (s), increase design flow depth (y), install flow divider and flow spreader, or relocate swale after detention facility

Step 3) Determine design flow velocity

$v_{wq} = Q_{wq}/A_{wq}$	design flow velocity	_____	(fps)	Flow Continuity Eq.
A_{wq}=	$by+Zy^2$	_____	(sf)	Cross-sectional area at design depth
Z=	side slope length per unit height	_____	(feet/ft)	Select now

If the velocity exceeds 1.0 foot per second, go back to Step 2 and modify longitudinal slope, bottom width, or depth.
If the velocity is less than 1.0 foot per second, proceed to step 4.

Step 4) Calculate swale length

$L = 540\ v_{wq}$ = swale length		_____	(ft)	
540 =	hydraulic residence time	_____	(s)	
v_{wq}=	design flow velocity	_____	(fps)	Calculated in Step 3

If the length is less than 100 feet, increase the length to 100 feet, leaving the bottom width unchanged.
If the swale length can be accommodated on the site, proceed to Step 6.
If the length is too long for the site, proceed to Step 5.

Step 5) Adjust swale layout to fit on site.

Reduce swale length and increase bottom width to provide an equivalent top area.

$A_{top} = (b_i + b_{slope})L_i = (b_f + b_{slope})L_f$		_____	(sf)	Calculate top area at WQ design depth
b_f=	increased bottom width	_____	(ft)	Select now
b_{slope}=	2Zy (ft) top width above sides	_____	(ft)	
L_f=	reduced swale length	_____	(ft)	Select now; Required minimum 100 ft

Go to Step 3 and recalculate design flow velocity (v) using b_f.
Recalculate to Assure the 9 minute retention

Step 6) Provide conveyance capacity for flows higher than Qwq

Meet conveyance requirements of Section 1.2.4. and check conveyance and velocity of high flows.

A) Q_c =	$1.49/n_c \quad A_c R_c^{0.67} s^{0.5}$	_____	(cfs)	Manning's Eq.; 100-yr or 25-yr flow in Step 1
n_c =	Manning's roughness coefficient	_____		Manning's "n" from Table 4.4.1 B
A_c=	$by_c + Zy_c^2$	_____	(sf)	Cross sectional area
R_c=	$A_c/(b+2y_c(Z^2+1)^{0.5})$	_____	(ft)	Hydraulic Radius
s =	longitudinal slope, along flow	_____	(ft/ft)	Selected in Step 2
y_c=	depth of 25-yr or 100-yr flows	_____	(ft)	Calculate now
B) $v_{100}=Q_{100}/A_{100}$		_____	(fps)	

If v_{100} exceeds 3.0 feet per second, return to Step 2 and increase the bottom width or flatten slope.

Size Summary

Land area is needed for the channel, access, setbacks, and, if necessary, area to convey high flows.

Atop= Water surface at conveyance depth_____ (sf)

Cross section includes depth, channel slope x length, and, if necessary, underdrain and high flows.

Slope times length= _____ (ft) From Steps 3, 4 and 6

OTHER CRITERIA (Section 6.3.1.2)

Swale Geometry
Water Depth
Flow Velocity, Energy Dissipation and Flow Spreading
Underdrains
Swale Divider
Access
Soil and plantings
Liners (Section 6.2.4)
Setbacks (Section 6.2.3)

FILTER STRIP WORKSHEET
2005 Surface Water Design Manual Sizing Method

Project: _____

METHODS OF ANALYSIS (Section 6.3.1.1)

Step 1) Calculate design flows

Filter strips usually precede other water quality facilities (See menus in 6.1)

Two-year flow	$Q_{2\text{-}yr}$	_____	(cfs)	See 3.2.2 KCRTS Method
Water quality design flow	Q_{wq}	_____	(cfs)	"

Step 2) Calculate design flow depth

Q_{wq}=	water quality design flow	_____	(cfs)	Calculated in Step 1
n_{wq} =	Manning's roughness coefficient	_____		Use 0.35 or 0.45, see p. 6-59
W =	width of strip along imperv.	_____	(ft)	Determine now
s =	longitudinal slope along path	_____	(feet/ft)	Determine now
$d_f = \left[\frac{Q_{wq}\, n_{wq}}{1.49\, W s^{0.5}}\right]^{0.6}$	design flow depth	_____	(ft)	Manning's formula, re-arranged

If the design flow depth is greater than I inch (0.083 ft), the flow must reduced, the strip width must be increased, or a different WQ facility must be used.

CHECK: _____ (ft) < 0.083 ft, OK

Step 3)Calculate the design flow velocity through the strip

Q_{wq}=	_____	(cfs)	From step 1
W =	_____	(ft)	From step 2
d_f =	_____	(ft)	From step 2
$V_{wq} = Q_{wq}/Wd_f$	_____	(fps)	Flow Continuity Eq. w/ Wd_f for A

If V_{wq} exceeds 0.5 f/s, a filter strip may not be used. Redesign site to use a gentler longitudinal slope, or use another WQ facility.

CHECK: _____ (fps) < 0.5 fps, OK

Step 4) Calculate length of filter strip

hydraulic residence time =	540	(s)	Required 9 minutes
v_{wq}= design flow velocity	_____	(fps)	Calculated in Step 3
L= 540 v_{wq}	_____	(ft)	

Size Summary

Land area is needed for the strip, access, & area outside the treatment area to convey high flows

Other Criteria

Flow spreading & energy dissipation

Access

Soil amendment

Planting requirements

Liners (Section 6.2.4)

Recommended design features p. 6-61

BAFFLE OIL/WATER SEPARATOR WORKSHEET
2005 Surface Water Design Manual Sizing Method

Project: _____

METHODS OF ANALYSIS (Section 6.6.2.1)

Step 1) Calculate design flows

Calculate flows on Design Flow and Design Volume worksheet and transfer results here.

Tributary area	_____	(sf)	
Water quality design flo Q_{wq}	_____	(cfs)	See 3.2.2 KCRTS/Runoff files Method

Step 2) Calculate the minimum vertical cross-sectional area

$A_c = Q/V_H$

$A_{c=}$	minimum cross-sectional area	_____	(sf)	
Q=	water quality design flow	_____	(cfs)	Step 1
$V_{H=}$	design horizontal velocit	0.008	(fps)	Using V_H=15V_T;V_T=0.033 fpm=0.00055 fps

Step 3) Calculate the width and depth of the vault

D= Ac/W

W=	width of vault	_____	(ft)	May be standard width
Ac=		_____	(sf)	from Step 2
D=	maximum depth	_____	(ft)	Minimum 3 ft; Maximum 8 ft

The computed depth D must meet a depth-to-width ratio r of between 0.3 and 0.5

Note: D = (rAc)0.5

W = D/r, where r = the depth-to-width ratio

D/W= _____

Step 4) Calculate the length of the vault

L= FD(V_H/V_T)

V_H=	horizontal velocity (ft/min)		Vh/Vt = 15
V_T=	oil droplet rise rate (ft/min)		
F=	turbulence and short-cir	1.65	select using VH/VT = 15; see Figure 6.6.2.A
D=	depth	_____ (ft)	from step 3

Therefore: L= 1.65 X 15 X D _____ (ft)

Step 5) Check the separator's length-to-width ratio.

L/W vault =	_____	the ratio of L/W must be 5 or greater
L/W forebay =	_____	L/W must be 3 or greater

Step 6) Compute and check that the proposed separator vault satisfies the minimum horizontal surface area A_H criterion.

A_H must be less than or = LW:

A_H=	(1.65Q/0.33)	_____	(sf)	
Q=		_____	(cfs)	Step 1
LW=		_____	(sf)	

Step 7) Compute and check the horizontal surface area of the vault forebay.

This area must be greater than 20 square feet p

A_F:A_{TI} > 1: 500

L=	length of vault	_____	(ft)	Step 4
$L_{F=}$	length of forebay	_____	(ft)	=L/3
W=		_____		Step 3
A_F=	forebay area = L_F x W	_____	(ft^2)	
A_{TI}=	Tributary Impervious Area	_____	(ft^2)	(1 acre = 43,560 ft^2)
Required min. area A_F (20 X A_{TI}/10,000)		_____	(sf)	
		_____	(sf)	
OR use ratio A_F:A_{TI}=		_____	:500	If > 1:500, OK

Step 8) Design the flow splitter and high-flow bypass.

See Section 6.2.5 (p.6-27) for information on flow splitter design.

OTHER CRITERIA (Section 6.6.2)

General siting before other stormwater facilities (p. 6-147)
Baffle requirements (p. 6-148)
Inlet & outlet (p. 6-149)
Material requirements (p. 6-149)
Maintenance access (p. 6-149 to 6-150, also p. 5-37 to 5-38)

SAND FILTER DETAILED KCRTS ROUTING METHOD WORKSHEET

2005 Surface Water Design Manual

Project: _____

METHODS OF ANALYSIS (Section 6.5.2.1) Detailed KCRTS Routing Method

Step 1) Determine whether a basic or large sand filter is needed.

Basic or Large Sand Filter?	_____		See Section 1.2.8 (map) and Section 6.1(menus)
%runoff volume to be treated	_____		90% for basic and 95% for large

Step 2) Determine rainfall region and regional scale factor.

Rainfall Region: Landsburg or Seatac?	_____	(unitless)	Required Figure 3.2.2.A
Regional Scale Factor:	_____	(unitless)	"

Step3) Create inflow time series

If the sand filter is upstream of detention, the time series is that of the developed site.

If the sand filter is downstream of detention, the time series is that leaving the detention pond.

In KCRTS at the main menu, select "CREATE a new time series" to generate the inflow time series

Select project location	_____		Seatac or Landsburg
Enter Till Forest	_____	(acres)	
Enter Till Pasture	_____	(acres)	
Enter Till Grass	_____	(acres)	
Enter Outwash Forest	_____	(acres)	
Enter Outwash Pasture	_____	(acres)	
Enter Outwash Grass	_____	(acres)	
Enter Wetlands	_____	(acres)	
Enter Impervious	_____	(acres)	
Enter scale factor	_____		0.8 to 1.1
Enter time step: 15-min	_____		
Enter data type: Reduced or historic	_____		
Select "Compute total area"			
Enter time series file name	*BG-IN1*		Name of inflow time series, default *.TSF

Select "Compute time series", Overwrite file, press "F10" to view information.

Press "Enter" to return to main menu

Step 4) Determine the design overflow volume

For off-line (high flows bypass the facility) sand filters the design overflow volume is zero and a flow splitter diverts flows above 60% of the 2-yr peak discharge 15 min time steps.

For the on-line (all flows go through the sand filter pond) sand filters, the ……..

On-line or off-line sand filter? _____

At the KCRTS main menu, select "Enter the analysis TOOLS module," then "Compute VOLUME discharge"

Enter time series file	*BG-IN1*		Inflow hydrograph previously named
Enter output time series file	*BG-IN1*		Name data file, default *.PRN
Enter start date	*10/1/0 0:00*		Required 10/1/0 0:00
Enter end date	*9/30/8 23:59*		Required 9/30/8 23:59
Select "Extract discharge volume"			
Note "Discharge Volume" (V_d) results	_____	(acft)	Inflow volume
% runoff volume to overflow ($\%V_{rf}$)	_____	(%)	10% for basic; 5% for large (Step 1)
Calc. design overflow volume = $\%V_{rf} * V_d$	_____	(acft)	Maximum overflow volume

Select "Save to BG-IN1.PRN", then select "Return to Previous Menu"

Step 5) Define sand filter modeling parameters and Step 6) Size the sand filter

In KCRTS at the main menu, select “Size a Facility”

Enter R/D Facility (filename)	*BG-SF1*		Automatically *.RDF
Switch to “Manual” Design Technique			
Select “Create a new R/D Facility," then select “Infiltration Pond”			
Enter side slope			Horizontal component
Enter bottom area		(sqft)	
0r bottom length (ft)			
bottom width (ft)			
Enter effective storage depth before overflow		(ft)	
Enter Elevation at 0 stage		(ft)	
Enter Vertical permeability		(min/in)	
Toggle to desired bottom surface			Permeable Required
Toggle to desired side surface			Impermeable Required
Enter Riser Head		(ft)	
Enter Riser Diameter		(in)	12-36" See 6.5.2.2 and 5.3.1.1
Enter Number of orifices			
Select top of riser	*flat*		
Select "Point of Compliance"			
Enter inflow time series name	*BG-IN1*		
Select “Return to Facility Edit”			
Skip Test Hydrograph List and Define Riser Orifices and Notch			
Select "Save to *.rdf"			

Step 7) Route inflow time series through sand filter and compare volumes

Select “MODIFY auto Analysis setup”

Toggle to "Skip Peaks" from "Calculate Peaks"		
Toggle to "Do not Notify" from "Notify"		
Leave Duration Calcs? Prompt at default "Skip Durations"		
Toggle to "Calculate Volume" from "Skip Volume"		
Select “Edit peak/Duration/Volume Information”		
Enter start date	*10/1/0 0:00*	Required 10/1/0 0:00
Enter end date	*9/30/8 23:59*	Required 9/30/8 23:59
Select “Return to facility Design Menu”		
Select "OVERWRITE File"		

Select “Route Time series & perform auto analysis”

Press “F10” to display routing data, then press return again for volume calculation
Press “F10” to view volume results when R/D Facility menu displays.
Press "Enter" to return to R/D facility menu.

KCRTS will display the time series flow volume. Compare the discharge volume with design overflow volume calculated in Step 4. If outflow volumes exceed design, the filtered volumes do not meet the treatment goal requirement and increase sand area and/or pond volume and route again. If outflow volumes significantly exceed design, decrease sand area and/or pond volume and route again. If outflow volumes do not exceed design, the treatment goal requirements are met.

Sand Filter Area (sqft)	*Discharge Volume (ac-ft)* *Target=*

To Adjust Sand Filter Geometry, Re-route Flows and Re-check Flow Volumes

Select “Edit facility” at R/D Facility menu
Edit data to change facility, then select “save to *.rdf”
Select "Overwrite File"
Select “Route time series and perform auto analysis”

Step 8) Size the underdrain system

* For feeder pipes, the design criteria in "underdrain systems"(6.5.2.2) can be used in lieu of analysis
* The collector pipe shall be sized to convey the 2-year 15-minute peak flow with 1' of head above the upstream invert. Capacity can be checked using the "KCBW" standard step back water program.

KCRTS dev., 2-yr peak flow (15-min steps) _____ (cfs)

Size Summary: Volume, Land area, and Cross Section

The land needed includes area for the pond, berms, access, and setbacks (6.2.3).

A_{top}=Pond top area. If Square, $(A_{sf}^{0.5}+2dZ)^2$ _____ (sf) "A_{sf}" from Step 5 and "d" from Step 3

Z= side slope length per unit height _____ (unitless) Select now

Total volume equals volume of ponded water (V_{wq}) plus volume to convey the 100-yr flow.

$V_{wq}=(A_{top}+A_{sf})d/2$ ponded water volume _____ (ft^3)

Cross-section includes underdrain system, sand depth (1.5 ft), pond depth ("d," max 6 ft), and freeboard

SAND FILTER SIMPLE SIZING METHOD WORKSHEET

2005 Surface Water Design Manual Sizing Method

Project: _____

METHODS OF ANALYSIS (Section 6.5.2.1), Simple Sizing Method

Step 1) Determine whether a basic or large sand filter is needed.

See Core Requirement 8 of Section 1.2.8.

Basic or Large Sand Filter?	_____		Consult water quality menus in Section 6.1

Step 2) Determine rainfall region and regional scale factor.

Rainfall Region: Landsburg or Seatac?	_____	(unitless)	Required Figure 3.2.2.A
Regional Scale Factor:	_____	(unitless)	"

Step 3) Determine maximum depth of water above sand filter

d= maximum water depth above sand	_____	(ft)	Select now

Step 4) Determine site characteristics

For the simple sizing method, pasture is assumed grass and wetlands are assumed impervious.

Soil Type: Till or Outwash?		_____		See Table 3.2.2 B
T_i=	tributary area of impervious surface	_____	(acres)	Section 3.2.2.1
T_{tg}=	tributary area of till grass	_____	(acres)	"
T_{og}=	tributary area of outwash grass	_____	(acres)	"
Forest areas are ignored		_____	(acres)	

Step 5) Calculate minimum required surface area for sand filter

A_{sf}= 0.7 $C_s(T_iA_i+T_{tg}A_{tg}+T_{og}A_{og})$

A_{sf}=	sand filter area	_____	(sf)	
0.7=	adjustment factor for routing effect	_____	(unitless)	
C_s=	regional scale factor	_____	(unitless)	From Step 2
T_i=	tributary area of impervious	_____	(acres)	From Step 4
T_{tg}=	tributary area of till grass	_____	(acres)	"
T_{og}=	tributary area of outwash grass	_____	(acres)	"
A_i=	filter area for impervious	_____	(sf/acre)	Table 6.5.2.A, Impervious column
A_{tg}=	filter area for till grass	_____	(sf/acre)	Table 6.5.2.A, Till Grass column
A_{og}=	filter area for outwash grass	_____	(sf/acre)	Table 6.5.2.A, Outwash Grass column

Step 6) Size the underdrain system

* The design criteria in "underdrain systems"(6.5.2.2) can be used in lieu of analyzing conveyance capacity for feeder pipes.
* The collector pipe, collecting flows from the underdrain system, shall be sized to convey the 2-year 15-minute peak flow with one foot of head above the invert of the upstream end of the collector pipe. Capacity can be checked using the "KCBW" standard step back water program.

KCRTS 2-year developed peak flow	_____	(cfs)	See Section 3.2.2
Rainfall Region: Seatac or Landsburg?	_____		See Figure 3.2.2.A
Soil Type: Till or outwash?	_____		See Table 3.2.2 B
Forest	_____	(acres)	Areas draining to swale (3.2.2)
Pasture	_____	(acres)	"
Grass	_____	(acres)	"
Wetland	_____	(acres)	"
Impervious	_____	(acres)	"
Scale Factor:	_____		See Figure 3.2.2.A
Time Step: hourly or 15-min?	*15-min*		Required "15 min" (6.2.1)
Data Type: Reduced or historic?	_____		Recommend "Reduced" (3.2.2.1)

<u>Size Summary: Land area, Volume, and Cross Section</u>

The land needed includes area for the pond, berms, access, and setbacks.

A_{top}= Pond top area, for Square, $(A_{sf}^{0.5}+2dZ)^2$	_____	(sf)	Calculate area at top of water
A_{sf}= sand filter area	_____	(sf)	From Step 5
d= maximum water depth above sand	_____	(ft)	From Step 3
Z= side slope length per unit height	_____	(feet/ft)	Select now (Horizontal/Vertical)

Total volume equals volume of ponded water (V_{wq}) plus volume to convey the 100-yr flow.

$V_{wq}=(A_{top}+A_{sf})d/2$ ponded water volume _____ (ft^3)

Cross section includes underdrain system, sand depth (1.5 ft), and pond depth ("d," max 6 ft)

Pond depth _____ (ft)

OTHER DESIGN DETAILS (Section 6.5.2.2)

Pretreatment, Flow Spreading, Energy Dissipation
Overflow and Bypass Structures
Filter Composition and Specifications
Underdrain Systems
Grass Cover
Access Roads
Sequence of Facilities (Section 6.2.2)
Setbacks, Slopes, and Embankments (Section 6.2.3)
Liners (Section 6.2.4)
Presettling (Section 6.5.1)

SAND FILTER VAULT SIZING WORKSHEET
2005 Surface Water Design Manual Sizing Method

Name:

METHODS OF ANALYSIS (Section 6.5.2.1), Simple Sizing Method

Step 1) Determine whether a basic or large sand filter is needed.

See Core Requirement 8 (1.2.8) and the WQ applications map in the back of the design manual.

* Large sand filter -- an option in resource stream or sensitive lake areas, or partial option for sphagnum bog areas

* Basic sand filter -- an option for basic WQ treatment areas or part of a 2-3 facility treatment train for other areas

Basic, regionally significant resource stream, sensitive lake, or sphagnum bog area?	Basic	Water Quality Applications Map, manual back cover
Basic or Large Sand Filter?	Basic	Consult water quality menus in Section 6.1

Step 2) Determine rainfall region and regional scale factor.

Refer to the precipitation scaling map in Chapter 3, Figure 3.2.2.A.

Rainfall Region: Landsburg or Seatac?	_____	(unitless)	Required Figure 3.2.2.A
Regional Scale Factor:	_____	(unitless)	Required Figure 3.2.2.A

Step 3) Determine maximum depth of water above sand filter

Select maximum water storage depth above the surface of the filter depending on site topography.

d= maximum water depth above sand	_____	(ft)	Select now; maximum 6 feet (6.5.2.2)

Step 4) Determine site characteristics

For the simple sizing method, vegetated areas other than grass may be represented as grass.

Soil Type: Till or Outwash?		_____		See Table 3.2.2B
T_i=	tributary area of impervious surface	_____	(acres)	Roads, roofs, etc, See Table 3.2.2.1
T_{tg}=	tributary area of till grass	_____	(acres)	Landscaping and forest, See Table 3.2.2.1
T_{og}=	tributary area of outwash grass	_____	(acres)	Refer to Table 3.2.2.1

Step 5) Calculate minimum required surface area for sand filter

$A_{sf} = 0.7\ C_s(T_iA_i+T_{tg}A_{tg}+T_{og}A_{og})$

0.7=	adjustment factor for routing effec	0.7	(unitless)	
C_s=	regional scale factor	_____	(unitless)	From Step 2
T_i=	tributary area of impervious	_____	(acres)	From Step 4
T_{tg}=	tributary area of till grass	_____	(acres)	From Step 4
T_{og}=	tributary area of outwash grass	_____	(acres)	From Step 4
A_i=	filter area for impervious	_____	(sf/acre)	Table 6.5.2.A, Ai Impervious column "d"
A_{tg}=	filter area for till grass	_____	(sf/acre)	Table 6.5.2.A, Atg Till grass column "d"
A_{og}=	filter area for outwash grass	_____	(sf/acre)	Table 6.5.2.A, Outwash grass column "d"
A_{sf}=	sand filter area	[ ]	(sf)	

Step 6) Size the underdrain system

*Design criteria in "underdrain systems"(6.5.2.2) can be used or do capacity analysis for feeder pipes.

* The pipe collecting flows from the underdrain system shall be sized to convey the 2-yr 15-min. peak flow with one foot of head above the invert of the upstream end of the collector pipe. Capacity can be checked using the "KCBW" standard step back water program.

KCRTS developed, 2-year return period, 15-minute time step, peak flow	_____	(cfs)	See Section 3.2.2

Rainfall region: Seatac or Landsburg?	_____		See Step 2 or Figure 3.2.2.A
Scale Factor:	_____	(unitless)	See Step 2 or Figure 3.2.2.A
Time Step: hourly or 15-min?	_____		Required "15 min"
Data Type: Reduced or historic?	_____		"Reduced," (3.2.2.1)
Till grass	_____	(acres)	See Step 4 "T_{tg}"
Outwash grass	_____	(acres)	See Step 4 "T_{og}"
Impervious	_____	(acres)	See Step 4 "T_i"
Effective area	_____		(3.2.2.1)

Step 7) Determine presettling volume

Determine rainfall *R* for mean annual storm.

Rainfall (R) _____ (feet) Required from Figure 6.4.1.A

Calculate runoff from mean annual storm

$V_r = (0.9A_i + 0.25A_{tg} + 0.10A_{tf} + 0.01\ A_{og})$ X R

A_i=	tributary area of impervious surface	_____	(sf)
A_{tg}=	tributary area of till grass	_____	(sf)
Atf =	tributary area of till forest	_____	(sf)
A_{og}=	tributary area of outwash grass	_____	(sf)
R =	rainfall from mean annual storm	_____	(ft)
V_r =	volume of runoff from mean annual storm	_____	(cf)

Calculate presettling volume

$V_b = f\ V_r$

f =	Volume factor	0.75	(unitless)
V_r =	volume of runoff, mean annual storm		(cf)
V_b =	Volume of the wetpool		(cf)

Calculate presettling cell size

Vault depth	_____	(ft)	
Vault area	_____	(sf)	Volume /cell depth
Vault width	_____	(ft)	Use 20' w for precast options
Vault length	_____	(ft)	

Size Summary: Surface area change in elevation

Total surface area equals sand bed area, surface area of presettling cell plus addtl for inlet/outlet pipes

Sand surface area	_____	(sf)	
Presettling surface area	_____	(sf)	
Outlet pipe area		(sf)	(3'X20')
Total surface area		(sf)	

The elevational change needed includes

sand depth	_____	(ft)	(required)
underdrain	_____	(ft)	(minimum)
Depth "d" above sand	_____	(ft)	(Depends on design)
Total fall needed:	_____	(ft)	

Other design criteria (Section 6.5.2.2)

Pretreatment, Flow Spreading, Energy Dissipation

Overflow and bypass structures

Filter Composition and specifications

Access to inlet, outlet, over sand bed

STORMWATER WETLAND SIZING WORKSHEET
2005 Surface Water Design Manual Sizing Method

Project name: _____

METHODS OF ANALYSIS (see p. 6-86)

Step 1) Determine volume factor *f*.

Use basic size f = 3 Consult WQ requirements(Section1.2.8)

Step 2) Determine rainfall *R* for mean annual storm.

Rainfall (R) _____ (feet) Required from Figure 6.4.1.A

Step 3) Calculate runoff from mean annual storm

$V_r = (0.9A_i + 0.25A_{tg} + 0.10A_{tf} + 0.01\ A_{og})\ X\ R$

A_i=	tributary area of impervious surface	_____	(sf)	Determine now
A_{tg}=	tributary area of till grass	_____	(sf)	Determine now
Atf =	tributary area of till forest	_____	(sf)	Determine now
A_{og}=	tributary area of outwash grass	_____	(sf)	Determine now
R =	rainfall from mean annual storm	_____	(ft)	From Step 2
V_r =	volume of runoff from mean annual storm	_____	(cf)	

Step 4) Calculate volume of "template" wetpool

$V_b = f\ V_r$

f =	Volume factor	3	(unitless	From Step 1
V_r =	volume runoff, mean annual storm		(cf)	From Step 3
V_b =	Volume of the "template" wetpool		(cf)	

Step 5) Calculate required wetland surface area

$A_{top} = V_b/3$ _____ (A_{top} = surface area of both cells)

template V_b =	_____	(cf)	From step 4
Atop =		(sf)	"Sizing" depth is 3 ft (see step 7, p. 6-87)

Step 6) Determine wetland cell dimensions same as steps 7 & 8, stormwater wetland)

a) Determine geometry of first cell

V_r from step 3 = volume 1st cell	_____	(cf)	
Depth ***h*** 1st cell (minus sed. stor.)	_____	(ft)	Note actual cell depth may be from 4 to 8 ft

Determine horizontal xs area at mid-depth using Amid = V1st/h

A_{mid}	_____	(sf)
Mid-width	_____	(ft)
Mid-length	_____	(ft)

Determine horizontal xs area at surface

Z = Side slope length: __(H): 1(V)	_____	(ft)	3:1 recommended
2(*h*/2 x Z)=	_____	(ft)	

Find top dimensions by adjusting for shape geometrics

Top width	_____	(ft)
Top length	_____	(ft)
A_{T1} =	_____	(sf)

b) Determine geometry of second cell

Wetland surface area A_{top}	_____	(sf)	From step 5
Surface area of cell 2	_____		A_{top} - A_{T1}
Depth ***h*** of 2nd cell	varies, 1.5' avg		See Table 6.4.3.A and Criteria #8 p. 6-88

<u>Step 7) Choose plants for wetland cell</u>

See recommendations in Table 6.4.1.A, p. 6-75

<u>Step 8) Design rest of pond (See p. 6-87 for Criteria))</u>

Internal berm
Inlet & Outlet
Primary overflow
Access
Other Design Details (Sections 6.2.2, p. 6-18, 6.2.3, p. 20 and 6.2.4, p. 6-22)
- Sequence of Facilities
- Setbacks
- Sideslopes, fencing, embankment
- Liners

Total pond surface area estimate

Surface area 1st cell + 2nd cell + area for internal berm + area for access ramp

= _____

= _____

= [ ] sf

_____ Plus setbacks, access roads, 100-yr conveyance

WETPOND SIZING WORKSHEET

2005 Surface Water Design Manual Sizing Method

Project name: _____

METHODS OF ANALYSIS (see p. 6-68)

Step 1) Determine volume factor *f*.

Basic size? f = 3 Consult WQ requirements(Section1.2.8)

Large size? f = 4.5 to determine if basic or large size needed

Step 2) Determine rainfall *R* for mean annual storm.

Rainfall (R) _____ (feet) Required from Figure 6.4.1.A

Step 3) Calculate runoff from mean annual storm

$V_r = (0.9A_i + 0.25A_{tg} + 0.10A_{tf} + 0.01\ A_{og})$ X R

A_i=	tributary area of impervious surface	_____	(sf)	Determine now
A_{tg}=	tributary area of till grass	_____	(sf)	Determine now
A_{tf} =	tributary area of till forest	_____	(sf)	Determine now
A_{og}=	tributary area of outwash grass	_____	(sf)	Determine now
R =	rainfall from mean annual storm	_____	(ft)	From Step 2
V_r =	volume of runoff from mean annual storm	_____	(cf)	

Step 4) Calculate wetpool volume

$V_b = f\ V_r$

f =	Volume factor	_____	(unitless)	From Step 1
V_r =	volume runoff, mean annual storm		(cf)	From Step 3
V_b =	Volume of the wetpool	[ ]	(cf)	

Step 5) Determine wetpool dimensions

a) Determine geometry of first cell

Volume in first cell	_____	(cf)	25-35% of total
Depth ***h*** 1st cell (minus sed. stor.)	_____	(ft)	See Section 6.4.1.2

Determine horizontal xs area at mid-depth using Amid = V1st/h

Amid	_____	(sf)
Mid-width	_____	(ft)
Mid-length	_____	(ft)

Determine horizontal xs area at surface

Z = Side slope length: __(H):	1(V)	(ft)	3:1 recommended
2(*h*/2 x Z) =	_____	(ft)	

Find top dimensions by adjusting for shape geometrics

Top width	_____	(ft)
Top length	_____	(ft)
A_{top} =	_____	(sf)

b) Determine geometry of second cell

Volume in second cell	_____	(cf)	Must be 65 - 75%
Depth ***h*** of 2nd cell	_____	(ft)	See Section 6.4.1.2

Determine horizontal xs area at mid-depth using $A_{mid} = V_{2nd}/h$

A_{mid}	_____	(sf)	
Mid-width	_____	(ft)	
Mid-length	_____	(ft)	Used to check L:W

Determine xs-area at surface

Z = Side slope length: __(H): 1(V)	_____	(ft)	3:1 recommended
2(*h*/2 x Z) =	_____	(ft)	
Top width	_____	(ft)	
T_{top} length	_____	(ft)	
A_{top} =	_____	(sf)	
Adjust cell 2 width to match cell 1	_____	(ft)	
Adjust cell 2 length using A_{top}	_____	(ft)	

Geometry check: overall pond L : W at mid depth = 3 : 1

Pond width (mid-depth)	_____	(ft)
Cell 1 length (mid-depth)	_____	(ft)
Cell 2 length (mid-depth)	_____	(ft)
Pond length (mid-depth) = cell 1 + 2	_____	(ft)
	_____	
Lmid : Wmid =	_____	

Step 6) Design rest of pond (see Criteria p. 6-72)

Internal berm
Inlet & Outlet
Primary overflow
Access
Other Design Details (Sections 6.2.2, p. 6-18, 6.2.3, p. 20 and 6.2.4, p. 6-22)
- Sequence of Facilities
- Setbacks
- Sideslopes, fencing, embankment
- Liners

Total wetland surface area estimate

Surface area 1st cell + 2nd cell + area for internal berm + area for access ramp

= _____
= _____
= _____ sf

Plus setbacks, access roads, 100-yr conveyance

WETVAULT SIZING WORKSHEET
2005 Surface Water Design Manual Sizing Method

Project name: _____

METHODS OF ANALYSIS

Step 1) Determine volume factor *f*.

Basic size f = 3 Consult WQ requirements(Section1.2.8)

Step 2) Determine rainfall *R* for mean annual storm.

Rainfall (R) _____ (feet) Required from Figure 6.4.1.A

Step 3) Calculate runoff from mean annual storm

$V_r = (0.9A_i + 0.25A_{tg} + 0.10A_{tf} + 0.01\ A_{og}) \times R$

A_i=	tributary area of impervious surface	_____	(sf)	Determine now
A_{tg}=	tributary area of till grass	_____	(sf)	Determine now
Atf =	tributary area of till forest	_____	(sf)	Determine now
A_{og}=	tributary area of outwash grass	_____	(sf)	Determine now
R =	rainfall from mean annual storm	_____	(ft)	From Step 2
V_r =	volume of runoff from mean annual storm	_____	(cf)	

Step 4) Calculate wetpool volume

$V_b = f\ V_r$

f =	Volume factor	3	(unitless)	From Step 1
V_r =	volume of runoff, mean annual storm	_____	(cf)	From Step 3
V_b =	Volume of the wetpool	_____	(cf)	

Step 5) Determine wetpool dimensions

a) Determine geometry of first cell

Volume in first cell	_____	(cf)	Must be 25 - 35%
Depth ***h*** 1st cell (minus sed. stor.)	_____	(ft)	See Section 6.4.1.2
Determine horizontal xs-area at surface			
Atop =	_____	(sf)	If square = take sqrt
Find top dimensions by adjusting for shape geometrics			
Dimension of 1st cell: width	_____	(ft)	
length	_____	(ft)	

b) Determine geometry of second cell

Volume in second cell	_____	(cf)	Must be 65 - 75%
Depth ***h*** of 2nd cell	_____	(ft)	See Section 6.4.1.2
Determine xs-area at surface			
Atop =	_____	(sf)	
Dimension of 2nd cell: width	_____		

Dimension of 2nd cell: length _____ (ft) If rectangular, short side = 24 ft to match cell 1

Geometry check: overall pond L : W at mid depth = 3 : 1

Cell 1 length (mid-depth) _____ (ft)

Cell 2 length (mid-depth) _____ (ft)

Vault length = cell 1 + 2 _____ (ft)

Vault width _____ (ft)

Lmid : Wmid = _____

Step 6) Design rest of vault (Section 6.4.2.1)

Internal baffle

Inlet & Outlet

Access

Effective area _____ (3.2.2.1)

Note 5'X10" access, grating and corner vent holes

Other Design Details (Sections 6.2.2, 6.2.3, and 6.2.4)

Sequence of Facilities

Setbacks

Sideslopes, fencing, embankment

SIZE SUMMARY: Surface area, change in elevation

Vault width _____ (ft)

Vault length _____ (ft)

Surface area _____ (sf)

Elevation change needed: _____ (ft)

KING COUNTY, WASHINGTON
SURFACE WATER DESIGN MANUAL

REFERENCE 8-D

FLOW CONTROL AND WATER QUALITY FACILITY SUMMARY SHEET AND SKETCH

STORMWATER FACILITY SUMMARY SHEET

DDES Permit Number_____

(provide one Stormwater Facility Summary Sheet per *Natural Discharge Location*)

Overview:

Project Name _____Date_____

Downstream Drainage Basins

Major Basin Name _____

Immediate Basin Name _____

Flow Control:

Flow Control Facility Name/Number _____

Facility Location_____

If none,

Flow control provided in regional/shared facility (give location)_____

No flow control required_____ Exemption number _____

General Facility Information:

Type/Number of detention facilities:

_____ ponds

_____ vaults

_____ tanks

Type/Number of infiltration facilities:

_____ ponds

_____ tanks

_____ trenches

Control Structure Location _____

Type of Control Structure _____ Number of Orifices/Restrictions _____

Size of Orifice/Restriction: No. 1 _____

No. 2 _____

No. 3 _____

No. 4 _____

Flow Control Performance Standard _____

Live Storage Volume _____ Depth _____ Volume Factor of Safety _____

Number of Acres Served _____

Number of Lots _____

Dam Safety Regulations (Washington State Department of Ecology)

Reservoir Volume above natural grade _____

Depth of Reservoir above natural grade _____

Facility Summary Sheet Sketch

All detention, infiltration and water quality facilities must include a detailed sketch.
(11"x17" reduced size plan sheets may be used)

Water Quality:

Type/Number of water quality facilities/BMPs:

_____ biofiltration swale
(regular/wet/ or continuous inflow)

_____ combined detention/wetpond
(wetpond portion basic or large)

_____ combined detention/wetvault

_____ filter strip

_____ flow dispersion

_____ farm management plan

_____ landscape management plan

_____ oil/water separator
(baffle or coalescing plate)

_____ sand filter (basic or large)

_____ sand filter, linear (basic or large)

_____ sand filter vault (basic or large)
sand bed depth_____ (inches)

_____ stormwater wetland

_____ storm filter

_____ wetpond (basic or large)

_____ wetvault

_____ Is facility Lined?
If so, what marker is used above Liner?_____

_____ catch basin inserts: Manufacturer_____

_____ pre-settling pond

_____ pre-settling structure: Manufacturer_____

_____ high flow bypass structure (e.g., flow-splitter catch basin)

_____ source controls _____

Design Information

Water Quality design flow _____

Water Quality treated volume (sandfilter) _____

Water Quality storage volume (wetpool) _____

Facility Summary Sheet Sketch

All detention, infiltration and water quality facilities must include a detailed sketch.
(11"x17" reduced size plan sheets may be used)

KING COUNTY, WASHINGTON
SURFACE WATER DESIGN MANUAL

REFERENCE 8-E

CWSPPP WORKSHEET FORMS

BMP Implementation	Completed by:_____ Title:_____ Date:_____

Develop a plan for implementing each BMP. Describe the steps necessary to implement the BMP (i.e., any construction or design), the schedule for completing those steps (list dates), and the person(s) responsible for implementation.

BMPs	Description of Action(s) Required for Implementation	Scheduled Milestone and Completion Date(s)	Person Responsible for Action
Good Housekeeping	1.		
	2.		
	3		
Preventive Maintenance	1.		
	2.		
	3.		
	4.		
Spill Prevention and Emergency Cleanup	1.		
	2.		
	3.		
Inspections	1.		
	2.		
	3.		

BMPs	Description of Action(s) Required for Implementation	Schedule Milestone and Completion Date(s)	Person Responsible for Action
Source Control BMPs	1.		
	2.		
	3		
	4.		
	5.		
	6.		
	7.		
	8.		
Treatment BMPs	1.		
	2.		
	3.		
	4.		
Emerging technologies	1.		
	2.		
Flow Control BMPs	3.		
	4.		

Material Inventory

Completed by:_____

Title:_____

Date:_____

List materials handled, treated, stored, or disposed of at the project site that may potentially be exposed to precipitation or runoff.

Material	Purpose/Location	Quantity (Units)				Likelihood of contact with stormwater If Yes, describe reason		Past Spill or Leak	
		Used	Produced	Stored				Yes	No
		(indicate per/wk. or yr.)							

Pollution Prevention Team	Completed by: _____ Title: _____ Date: _____

Responsible Official:_____ Title:_____

Team Leader:_____ Office Phone:_____

Cell Phone #:_____

Pager #:_____

Responsibilities:

_____

_____

_____

(1)_____ Title:_____

Office Phone:_____

Pager #:_____

Cell Phone:_____

Responsibilities:

_____

_____

_____

(2)_____ Title:_____

Office Phone:_____

Pager #:_____

Cell Phone #:_____

Responsibilities:

_____

_____

_____

Potential Pollutant Source Identification	Completed by:_____ Title:_____ Date:_____

List all potential stormwater pollutants from materials handled, treated, or stored on-site.

Potential Stormwater Pollutant	Stormwater Pollutant Source	Likelihood of pollutant being present in your stormwater discharge. If yes, explain

List of Significant Spills and Leaks

Completed by:_____

Title:_____

Date:_____

List all spills and leaks of toxic or hazardous pollutants that were significant but are not limited to, release of oil or hazardous substances in excess of reportable quantities. Although not required, we suggest you list spills and leaks of non-hazardous materials.

Date (month/day/year)	Location (as indicated on site map)	Description				Response Procedure		Preventive Measure Taken
		Type of Material	Quantity	Source, If Known	Reason for Spill/Leak	Amount of Material Recovered	Material No longer exposed to Stormwater (Yes/No)	

Employee Training	Completed by:_____ Title:_____ Date:_____

Describe the annual training of employees on the SWPPP, addressing spill response, good housekeeping, and material management practices.

Training Topics 1.) LINE WORKERS	Brief Description of Training Program/Materials (e.g., film, newsletter course)	Schedule for Training (list dates)	Attendees
Spill Prevention and Response			
Good Housekeeping			
Material Management Practices			
2.) P2 TEAM:			
SWPPP Implementation			
Monitoring Procedures			

KING COUNTY, WASHINGTON
SURFACE WATER DESIGN MANUAL

REFERENCE 8-F

ADJUSTMENT APPLICATION FORM AND PROCESS GUIDELINES

King County
Department of Development and Environmental Services
900 Oakesdale Avenue Southwest
Renton, Washington 98055-1219

Surface Water Design Manual Requirements / Standards Adjustment* Request

Project Name:	DDES Project File No.: DDES Engineer/Planner Name:
Project Address:	Design Engineer: Phone:
Applicant/Agent: Phone:	Signature: Date:
Signature: Date:	Engineering Firm Name:
Address: City, State, Zip Code:	Address: City, State, Zip Code:

INSTRUCTIONS TO APPLICANT/DESIGN ENGINEER:

Please be sure to include all plans (T.I.R., if available), sketches, photos and maps that may assist in complete review and consideration of this adjustment request. Failure to provide all pertinent information may result in delayed processing or denial of your request. Please submit two complete copies of this request, application form, and applicable fee to the DDES Intake Counter, at 900 Oakesdale Avenue Southwest, Renton, Washington 98055-1219. For additional information, phone Randall Parsons, P.E., at (206) 296-7207.

REFER TO SECTION 1.4 IN CHAPTER 1 OF THE SURFACE WATER DESIGN MANUAL FOR ADJUSTMENTS

DESCRIPTION OF ADJUSTMENT REQUEST: ☐ Standard ☐ Complex ☐ Experimental ☐ Blanket
☐ Pre-application

APPLICABLE VERSION KCSWDM: ☐ 1990 (11/95) * ☐ 1998 (9/98) ☐ _____
* (Note: the term "variance" replaced by "adjustment")

APPLICABLE SECTION(S) OF STANDARDS:

JUSTIFICATION PER KCSWDM SECTION 1.4.2
☐ See attachments listed below.

AUTHORIZATION SIGNATURES:

DETERMINATION:
☐ Approval ☐ Conditional Approval (see below) ☐ Denial

☐ DNR/WLRD Approval Signed: _____ Date: _____ (Experimental & Blanket variances only)

DDES Staff Recommendation Signed: _____ Date: _____

Conditions of Approval:

☐ See attached Memo Dated: _____

DDES DIRECTOR/DESIGNEE:

DDES, Land Use Services Div., Engineering Review Supervisor: Signed: Date:	**DDES, Bldg. Serv. Div., Site Engineering & Planning Supervisor:** Signed: Date:

REFERENCE 8-F

ADJUSTMENT PROCESS GUIDELINES

1.0 PREAPPLICATION ADJUSTMENT PROCESS

This process is used when the applicant needs an adjustment decision to determine if a project is feasible or the results are needed to determine if a project is viable before funding a full application. Preapplication adjustment requests will be accepted when 1) an issue is raised or a potential constraint is identified at a preapplication conference with DDES, and 2) sufficient engineering information to evaluate the request is provided. A higher preapplication adjustment fee will apply to these requests, and any unused adjustment fee will be credited towards the permit application fee.

Steps in the processing of a preapplication adjustment shall include:

- A DDES preapplication conference is scheduled at which the applicant provides justification that a decision on the adjustment will effect viability of the project. An example could include a need to divert flows due to a downstream problem.

- King County may request additional information and site visits due to the limited data and lack of prior project review.

- A preapplication deposit is required and fee for review will be an hourly rate billing applied against the deposit. Any unused fees could be returned to the applicant. Any fees in excess of the deposit must be paid prior to the issuance of a decision.

- For approved preapplication adjustment, the applicant can apply that approval to the applied for permit proposal provided conditions of the approval are met, the proposal has not substantially changed and the applicable regulations have not changed. This will be determined by DDES.

The criteria for granting a preapplication adjustment are the same as for a Standard or Complex adjustment. However, preapplication adjustments will be tied by condition to the project proposal resented at the preapplication meeting. The appeal process is also the same as for a Standard adjustment or a Complex adjustment. This approval will expire 1 year after the approval date, unless a complete permit application is submitted and accepted.

2.0 EXPERMIENTAL DESIGN ADJUSTMENT PROCESS

This process is used for proposing new designs or methods different from those in the manual, that are not site specific, and where data sufficient to establish functional equivalence does not exist. Experimental design proposals will be submitted to DDES for processing review and recommendations and forwarded to DNR for review. These adjustments will incur a special review fee as adopted in the King County DDES fee ordinance. Experimental adjustments should be submitted prior to development permit application since they may take longer than a typical adjustment to review.

Upon approval of the adjustment by the DNR Division Manager, the application can use the design or method in a development proposal without applying for a site-specific adjustment. This type of adjustment is provided to encourage innovation on the part of the development community. It also can expedite the review and development of alternative designs for incorporation in future Manual updates.

Steps in the application for an Experimental Design Adjustment will include:

- The application for adjustment is preferably submitted prior to engineering plan review due to the extended review period that may occur. However, it may occur at any permit stage prior to final plan approval. If the review time is to exceed the time outlined in Section 1.4, staff will provide an estimate of the additional time necessary to complete the review within 10 working days of submittal of the adjustment.

- Review will follow the Standard or Complex adjustment procedure. DDES may forward to DNR without a recommendation.

- DDES will process and bill the applicant.

- Justification supporting comparable performance of the proposed system to a standard design is required. Where uncertainty or lack of supportive literature or performance testing exists, monitoring may be applicable with joint participation and funding between King County and the applicant.

Only a limited number of experimental adjustments for a particular facility or method will be granted. If the design proves successful, DNR and DDES may establish a blanket adjustment for the design until such time as it can be incorporated in the Design Manual by formal update. The appeal process is also the same as for a Standard adjustment or a Complex adjustment.

3.0 FEE REDUCTION

This process is used for adjustments that are determined to meet either of the conditions A or B identified below. The DDES Director or designee shall be responsible for making the determination for a fee reduction.

A. Minor adjustment requests that are defined as issues requiring no engineering review to determine appropriateness. These include:

- New or revised standard specifications for engineering and construction which are cited in the Manual (e.g., APWA standard specifications for public works construction, WSDOT standard specifications),
- Minor design alternatives that meet the stated intent in the Manual,
- Identified errors in the Manual.

B. Blanket Adjustments (See Reference Section 10-A Blanket Adjustments, for approved Blanket Adjustments).

KING COUNTY, WASHINGTON
SURFACE WATER DESIGN MANUAL

REFERENCE 8-G

DEDICATION AND INDEMNIFICATION CLAUSE – FINAL RECORDING

Sample Dedication and Indemnification Clause - Subdivision

KNOW ALL PEOPLE BY THESE PRESENTS that we, the undersigned owners of interest in the land hereby subdivided, hereby declare this plat to be the graphic representation of the subdivision made hereby, and do hereby dedicate to the use of the public forever all streets and avenues not shown as private hereon and dedicate the use thereof for all public purposes not inconsistent with the use thereof for public highway purposes, and also the right to make all necessary slopes for cuts and fills upon the lots shown thereon in the original reasonable grading of said streets and avenues, and further dedicate to the use of the public all the easements and tracts shown on this plat for all public purposes as indicated thereon, including but not limited to parks, open space, utilities and drainage unless such easements or tracts are specifically identified on this plat as being dedicated or conveyed to a person or entity other than the public, in which case we do hereby dedicate such streets, easements, or tracts to the person or entity identified and for the purpose stated.

Further, the undersigned owners of the land hereby subdivided, waive for themselves, their heirs and assigns and any person or entity deriving title from the undersigned, any and all claims for damages against King County, its successors and assigns which may be occasioned by the establishment, construction, or maintenance of roads and/or drainage systems within this subdivision other than claims resulting from inadequate maintenance by King County.

Further, the undersigned owners of the land hereby subdivided, agree for themselves, their heirs and assigns to indemnify and hold King County, its successors and assigns, harmless from any damage, including any costs of defense, claimed by persons within or without this subdivision to have been caused by alterations of the ground surface, vegetation, drainage, or surface or sub-surface water flows within this subdivision or by establishment, construction or maintenance of the roads within this subdivision. Provided, this waiver and indemnification shall not be construed as releasing King County, its successors or assigns, from liability for damages, including the cost of defense, resulting in whole or in part from the negligence of King County, its successors, or assigns.

This subdivision, dedication, waiver of claims and agreement to hold harmless is made with the free consent and in accordance with the desires of said owners.

IN WITNESS WHEREOF we set our hands and seals.

_____	_____
Name	Name
_____	_____
Name	Name
_____	_____
Name	Name

State of Washington
County of _____

I certify that I know or have satisfactory evidence that

_____

Signed the instrument and acknowledged it to be (his/her) free and voluntary act for the uses and purposes mentioned in the instrument.

Sample Dedication and Indemnification Clause – Short Subdivision

KNOW ALL PEOPLE BY THESE PRESENTS that we, the undersigned owners of interest in the land hereby short subdivided, hereby declare this short plat to be the graphic representation of the short subdivision made hereby, and do hereby dedicate to the use of the public forever all streets and avenues not shown as private hereon and dedicate the use thereof for all public purposes not inconsistent with the use thereof for public highway purposes, and also the right to make all necessary slopes for cuts and fills upon the lots shown thereon in the original reasonable grading of said streets and avenues, and further dedicate to the use of the public all the easements and tracts shown on this plat for all public purposes as indicated thereon, including but not limited to parks, open space, utilities and drainage unless such easements or tracts are specifically identified on this plat as being dedicated or conveyed to a person or entity other than the public, in which case we do hereby dedicate such streets, easements, or tracts to the person or entity identified and for the purpose stated.

Further, the undersigned owners of the land hereby short subdivided, waive for themselves, their heirs and assigns and any person or entity deriving title from the undersigned, any and all claims for damages against King County, its successors and assigns which may be occasioned by the establishment, construction, or maintenance of roads and/or drainage systems within this short subdivision other than claims resulting from inadequate maintenance by King County.

Further, the undersigned owners of the land hereby short subdivided, agree for themselves, their heirs and assigns to indemnify and hold King County, its successors and assigns, harmless from any damage, including any costs of defense, claimed by persons within or without this short subdivision to have been caused by alterations of the ground surface, vegetation, drainage, or surface or sub-surface water flows within this short subdivision or by establishment, construction or maintenance of the roads within this short subdivision. Provided, this waiver and indemnification shall not be construed as releasing King County, its successors or assigns, from liability for damages, including the cost of defense, resulting in whole or in part from the negligence of King County, its successors, or assigns.

This subdivision, dedication, waiver of claims and agreement to hold harmless is made with the free consent and in accordance with the desires of said owners.

IN WITNESS WHEREOF we set our hands and seals.

_____	_____
Name	Name
_____	_____
Name	Name
_____	_____
Name	Name

State of Washington
County of _____

I certify that I know or have satisfactory evidence that

_____

Signed the instrument and acknowledged it to be (his/her) free and voluntary act for the uses and purposes mentioned in the instrument.

KING COUNTY, WASHINGTON
SURFACE WATER DESIGN MANUAL

REFERENCE 8-H

BOND QUANTITIES WORKSHEET

Site Improvement Bond Quantity Worksheet

Original bond computations prepared by:

Name: _____ **Date:** _____

PE Registration Number: _____ **Tel. #:** _____

Firm Name: _____

Address: _____ **Project No:** _____

ROAD IMPROVEMENTS & DRAINAGE FACILITIES FINANCIAL GUARANTEE REQUIREMENTS

		PERFORMANCE BOND* AMOUNT	BOND* AMOUNT REQUIRED AT RECORDING OR TEMPORARY OCCUPANCY ***	PUBLIC ROAD & DRAINAGE MAINTENANCE/DEFECT BOND*
Stabilization/Erosion Sediment Control (ESC)	(A)	$ -		
Existing Right-of-Way Improvements	(B)	$ -		
Future Public Road Improvements & Drainage Facilities	(C)	$ -		
Private Improvements	(D)	$ -		
Calculated Quantity Completed			(E) $ -	
Total Right-of Way and/or Site Restoration Bond*/** (First $7,500 of bond* shall be cash.)	(A+B)	$ -		
Performance Bond* Amount (A+B+C+D) = TOTAL	(T)	$ - Minimum bond* amount is $1000.	T x 0.30 $ - OR	
Reduced Performance Bond* Total ***			(T-E) $ - Use larger of Tx30% or (T-E)	
Maintenance/Defect Bond* Total				(B+C) x 0.25 = $ -

NAME OF PERSON PREPARING BOND* REDUCTION: _____ Date: _____

*** NOTE:** The word "bond" as used in this document means any financial guarantee acceptable to King County.

**** NOTE:** KCC 27A authorizes right of way and site restoration bonds to be combined when both are required.
The restoration requirement shall include the total cost for all TESC as a minimum, not a maximum. In addition, corrective work, both on- and off-site needs to be included. Quantities shall reflect worse case scenarios not just minimum requirements. For example, if a salmonid stream may be damaged, some estimated costs for restoration needs to be reflected in this amount. The 30% contingency and mobilization costs are computed in this quantity.

***** NOTE:** Per KCC 27A, total bond amounts remaining after reduction shall not be less than 30% of the original amount (T) or as revised by major design changes.
SURETY BOND RIDER NOTE: If a bond rider is used, minimum additional performance bond shall be $ - (C+D)-E

REQUIRED BOND* AMOUNTS ARE SUBJECT TO REVIEW AND MODIFICATION BY DDES

Check out the DDES Web site at www.metrokc.gov/ddes

Unit prices updated: 02/12/02
Version: 4/22/02
Report Date: 5/26/2005

REF8H BOND QUANTITY WORKSHEET.XLS

Site Improvement Bond Quantity Worksheet

King County

Department of Development & Environmental Services
900 Oakesdale Avenue Southwest
Renton, Washington 98055-1219
206-296-6600 TTY 206-296-7217

For alternate formats, call 206-296-6600.

Project Name: _____ **Date:** _____

Location: _____ **Project No.:** _____

Activity No.: _____

Clearing greater than or equal to 5,000 board feet of timber?

_____ yes _____ no

If yes,

Forest Practice Permit Number: _____

(RCW 76.09)

Note: All prices include labor, equipment, materials, overhead and profit. Prices are from RS Means data adjusted for the Seattle area or from local sources if not included in the RS Means database.

Unit prices updated: 02/12/02
Version: 04/22/02
Report Date: 5/26/2005

Check out the DDES Web site at www.metrokc.gov/ddes

Site Improvement Bond Quantity Worksheet

		Reference #	Unit Price	Unit	Quantity	# of Applications	Cost
EROSION/SEDIMENT CONTROL	**Number**						
Backfill & compaction-embankment	**ESC-1**		$ 5.62	CY			
Check dams, 4" minus rock	**ESC-2**	SWDM 5.4.6.3	$ 67.51	Each			
Crushed surfacing 1 1/4" minus	**ESC-3**	WSDOT 9-03.9(3)	$ 85.45	CY			
Ditching	**ESC-4**		$ 8.08	CY			
Excavation-bulk	**ESC-5**		$ 1.50	CY			
Fence, silt	**ESC-6**	SWDM 5.4.3.1	$ 1.38	LF			
Fence, Temporary (NGPE)	**ESC-7**		$ 1.38	LF			
Hydroseeding	**ESC-8**	SWDM 5.4.2.4	$ 0.59	SY			
Jute Mesh	**ESC-9**	SWDM 5.4.2.2	$ 1.45	SY			
Mulch, by hand, straw, 3" deep	**ESC-10**	SWDM 5.4.2.1	$ 2.01	SY			
Mulch, by machine, straw, 2" deep	**ESC-11**	SWDM 5.4.2.1	$ 0.53	SY			
Piping, temporary, CPP, 6"	**ESC-12**		$ 10.70	LF			
Piping, temporary, CPP, 8"	**ESC-13**		$ 16.10	LF			
Piping, temporary, CPP, 12"	**ESC-14**		$ 20.70	LF			
Plastic covering, 6mm thick, sandbagged	**ESC-15**	SWDM 5.4.2.3	$ 2.30	SY			
Rip Rap, machine placed; slopes	**ESC-16**	WSDOT 9-13.1(2)	$ 39.08	CY			
Rock Construction Entrance, 50'x15'x1'	**ESC-17**	SWDM 5.4.4.1	$ 1,464.34	Each			
Rock Construction Entrance, 100'x15'x1'	**ESC-18**	SWDM 5.4.4.1	$ 2,928.68	Each			
Sediment pond riser assembly	**ESC-19**	SWDM 5.4.5.2	$ 1,949.38	Each			
Sediment trap, 5' high berm	**ESC-20**	SWDM 5.4.5.1	$ 17.91	LF			
Sed. trap, 5' high, riprapped spillway berm section	**ESC-21**	SWDM 5.4.5.1	$ 68.54	LF			
Seeding, by hand	**ESC-22**	SWDM 5.4.2.4	$ 0.51	SY			
Sodding, 1" deep, level ground	**ESC-23**	SWDM 5.4.2.5	$ 6.03	SY			
Sodding, 1" deep, sloped ground	**ESC-24**	SWDM 5.4.2.5	$ 7.45	SY			
TESC Supervisor	**ESC-25**		$ 74.75	HR			
Water truck, dust control	**ESC-26**	SWDM 5.4.7	$ 97.75	HR			
WRITE-IN-ITEMS ** (see page 9)**							
				Each			

ESC SUBTOTAL:	$ -
30% CONTINGENCY & MOBILIZATION:	$ -
ESC TOTAL:	$ -
COLUMN:	**A**

Unit prices updated: 02/12/02
Version: 04/22/02

Check out the DDES Web site at www.metrokc.gov/ddes

Report Date: 5/26/2005

Site Improvement Bond Quantity Worksheet

				Existing Right-of-Way		Future Public Road Improvements & Drainage Facilities		Private Improvements		Quantity Completed (Bond Reduction)*	
		Unit Price	Unit	Quant.	Cost	Quant.	Cost	Quant.	Cost	Quant. Complete	Cost
GENERAL ITEMS	**No.**										
Backfill & Compaction- embankment	GI - 1	$ 5.62	CY								
Backfill & Compaction- trench	GI - 2	$ 8.53	CY								
Clear/Remove Brush, by hand	GI - 3	$ 0.36	SY								
Clearing/Grubbing/Tree Removal	GI - 4	$ 8,876.16	Acre								
Excavation - bulk	GI - 5	$ 1.50	CY								
Excavation - Trench	GI - 6	$ 4.06	CY								
Fencing, cedar, 6' high	GI - 7	$ 18.55	LF								
Fencing, chain link, vinyl coated, 6' high	GI - 8	$ 13.44	LF								
Fencing, chain link, gate, vinyl coated, 20	GI - 9	$ 1,271.81	Each								
Fencing, split rail, 3' high	GI - 10	$ 12.12	LF								
Fill & compact - common barrow	GI - 11	$ 22.57	CY								
Fill & compact - gravel base	GI - 12	$ 25.48	CY								
Fill & compact - screened topsoil	GI - 13	$ 37.85	CY								
Gabion, 12" deep, stone filled mesh	GI - 14	$ 54.31	SY								
Gabion, 18" deep, stone filled mesh	GI - 15	$ 74.85	SY								
Gabion, 36" deep, stone filled mesh	GI - 16	$ 132.48	SY								
Grading, fine, by hand	GI - 17	$ 2.02	SY								
Grading, fine, with grader	GI - 18	$ 0.95	SY								
Monuments, 3' long	GI - 19	$ 135.13	Each								
Sensitive Areas Sign	GI - 20	$ 2.88	Each								
Sodding, 1" deep, sloped ground	GI - 21	$ 7.46	SY								
Surveying, line & grade	GI - 22	$ 788.26	Day								
Surveying, lot location/lines	GI - 23	$ 1,556.64	Acre								
Traffic control crew (2 flaggers)	GI - 24	$ 85.18	HR								
Trail, 4" chipped wood	GI - 25	$ 7.59	SY								
Trail, 4" crushed cinder	GI - 26	$ 8.33	SY								
Trail, 4" top course	GI - 27	$ 8.19	SY								
Wall, retaining, concrete	GI - 28	$ 44.16	SF								
Wall, rockery	GI - 29	$ 9.49	SF								

SUBTOTAL _____ _____ _____ _____

*KCC 27A authorizes only one bond reduction.

Check out the DDES Web site at www.metrokc.gov/ddes

Unit prices updated: 02/12/02
Version: 4/22/02
Report Date: 5/26/2005

Site Improvement Bond Quantity Worksheet

				Existing Right-of-way		Future Public Road Improvements & Drainage Facilities		Private Improvements		Bond Reduction*	
		Unit Price	Unit	Quant.	Cost	Quant.	Cost	Quant.	Cost	Quant. Complete	Cost
ROAD IMPROVEMENT	**No.**										
AC Grinding, 4' wide machine < 1000sy	RI - 1	$ 23.00	SY								
AC Grinding, 4' wide machine 1000-2000	RI - 2	$ 5.75	SY								
AC Grinding, 4' wide machine > 2000sy	RI - 3	$ 1.38	SY								
AC Removal/Disposal/Repair	RI - 4	$ 41.14	SY								
Barricade, type I	RI - 5	$ 30.03	LF								
Barricade, type III (Permanent)	RI - 6	$ 45.05	LF								
Curb & Gutter, rolled	RI - 7	$ 13.27	LF								
Curb & Gutter, vertical	RI - 8	$ 9.69	LF								
Curb and Gutter, demolition and disposal	RI - 9	$ 13.58	LF								
Curb, extruded asphalt	RI - 10	$ 2.44	LF								
Curb, extruded concrete	RI - 11	$ 2.56	LF								
Sawcut, asphalt, 3" depth	RI - 12	$ 1.85	LF								
Sawcut, concrete, per 1" depth	RI - 13	$ 1.69	LF								
Sealant, asphalt	RI - 14	$ 0.99	LF								
Shoulder, AC, (see AC road unit price)	RI - 15	$ -	SY								
Shoulder, gravel, 4" thick	RI - 16	$ 7.53	SY								
Sidewalk, 4" thick	RI - 17	$ 30.52	SY								
Sidewalk, 4" thick, demolition and disposa	RI - 18	$ 27.73	SY								
Sidewalk, 5" thick	RI - 19	$ 34.94	SY								
Sidewalk, 5" thick, demolition and disposa	RI - 20	$ 34.65	SY								
Sign, handicap	RI - 21	$ 85.28	Each								
Striping, per stall	RI - 22	$ 5.82	Each								
Striping, thermoplastic, (for crosswalk)	RI - 23	$ 2.38	SF								
Striping, 4" reflectorized line	RI - 24	$ 0.25	LF								

SUBTOTAL _____ _____ _____ _____

*KCC 27A authorizes only one bond reduction.

Check out the DDES Web site at www.metrokc.gov/ddes

Site Improvement Bond Quantity Worksheet

				Existing Right-of-way		Future Public Road Improvements & Drainage Facilities		Private Improvements		Bond Reduction*	
		Unit Price	Unit	Quant.	Cost	Quant.	Cost	Quant.	Cost	Quant. Complete	Cost
ROAD SURFACING (4" Rock = 2.5 base & 1.5" top course) For '93 KCRS (6.5" Rock= 5" base & 1.5" top course)											
For KCRS '93, (additional 2.5" base) add:	RS - 1	$ 3.60	SY								
AC Overlay, 1.5" AC	RS - 2	$ 7.39	SY								
AC Overlay, 2" AC	RS - 3	$ 8.75	SY								
AC Road, 2", 4" rock, First 2500 SY	RS - 4	$ 17.24	SY								
AC Road, 2", 4" rock, Qty. over 2500SY	RS - 5	$ 13.36	SY								
AC Road, 3", 4" rock, First 2500 SY	RS - 6	$ 19.69	SY								
AC Road, 3", 4" rock, Qty. over 2500 SY	RS - 7	$ 15.81	SY								
AC Road, 5", First 2500 SY	RS - 8	$ 14.57	SY								
AC Road, 5", Qty. Over 2500 SY	RS - 9	$ 13.94	SY								
AC Road, 6", First 2500 SY	RS - 10	$ 16.76	SY								
AC Road, 6", Qty. Over 2500 SY	RS - 11	$ 16.12	SY								
Asphalt Treated Base, 4" thick	RS - 12	$ 9.21	SY								
Gravel Road, 4" rock, First 2500 SY	RS - 13	$ 11.41	SY								
Gravel Road, 4" rock, Qty. over 2500 SY	RS - 14	$ 7.53	SY								
PCC Road, 5", no base, over 2500 SY	RS - 15	$ 21.51	SY								
PCC Road, 6", no base, over 2500 SY	RS - 16	$ 21.87	SY								
Thickened Edge	RS - 17	$ 6.89	LF								

SUBTOTAL _____ _____ _____ _____

*KCC 27A authorizes only one bond reduction.

Check out the DDES Web site at www.metrokc.gov/ddes

Unit prices updated: 02/12/02
Version: 4/22/02
Report Date: 5/26/2005

Site Improvement Bond Quantity Worksheet

				Existing Right-of-way		Future Public Road Improvements & Drainage Facilities		Private Improvements		Bond Reduction*	
		Unit Price	Unit	Quant.	Cost	Quant.	Cost	Quant.	Cost	Quant. Complete	Cost
DRAINAGE (CPP = Corrugated Plastic Pipe, N12 or Equivalent)											
For Culvert prices, Average of 4' cover was assumed. Assume perforated PVC is same price as solid pipe.											
Access Road, R/D	D - 1	$ 16.74	SY								
Bollards - fixed	D - 2	$ 240.74	Each								
Bollards - removable	D - 3	$ 452.34	Each								
* (CBs include frame and lid)											
CB Type I	D - 4	$ 1,257.64	Each								
CB Type IL	D - 5	$ 1,433.59	Each								
CB Type II, 48" diameter	D - 6	$ 2,033.57	Each								
for additional depth over 4'	D - 7	$ 436.52	FT								
CB Type II, 54" diameter	D - 8	$ 2,192.54	Each								
for additional depth over 4'	D - 9	$ 486.53	FT								
CB Type II, 60" diameter	D - 10	$ 2,351.52	Each								
for additional depth over 4'	D - 11	$ 536.54	FT								
CB Type II, 72" diameter	D - 12	$ 3,212.64	Each								
for additional depth over 4'	D - 13	$ 692.21	FT								
Through-curb Inlet Framework (Add)	D - 14	$ 366.09	Each								
Cleanout, PVC, 4"	D - 15	$ 130.55	Each								
Cleanout, PVC, 6"	D - 16	$ 174.90	Each								
Cleanout, PVC, 8"	D - 17	$ 224.19	Each								
Culvert, PVC, 4"	D - 18	$ 8.64	LF								
Culvert, PVC, 6"	D - 19	$ 12.60	LF								
Culvert, PVC, 8"	D - 20	$ 13.33	LF								
Culvert, PVC, 12"	D - 21	$ 21.77	LF								
Culvert, CMP, 8"	D - 22	$ 17.25	LF								
Culvert, CMP, 12"	D - 23	$ 26.45	LF								
Culvert, CMP, 15"	D - 24	$ 32.73	LF								
Culvert, CMP, 18"	D - 25	$ 37.74	LF								
Culvert, CMP, 24"	D - 26	$ 53.33	LF								
Culvert, CMP, 30"	D - 27	$ 71.45	LF								
Culvert, CMP, 36"	D - 28	$ 112.11	LF								
Culvert, CMP, 48"	D - 29	$ 140.83	LF								
Culvert, CMP, 60"	D - 30	$ 235.45	LF								
Culvert, CMP, 72"	D - 31	$ 302.58	LF								
		SUBTOTAL									

*KCC 27A authorizes only one bond reduction.

Check out the DDES Web site at www.metrokc.gov/ddes

Unit prices updated: 02/12/02
Version: 4/22/02
Report Date: 5/26/2005

Site Improvement Bond Quantity Worksheet

DRAINAGE CONTINUED				Existing Right-of-way		Future Public Road Improvements & Drainage Facilities		Private Improvements		Bond Reduction*	
	No.	Unit Price	Unit	Quant.	Cost	Quant.	Cost	Quant.	Cost	Quant. Complete	Cost
Culvert, Concrete, 8"	D - 32	$ 21.02	LF								
Culvert, Concrete, 12"	D - 33	$ 30.05	LF								
Culvert, Concrete, 15"	D - 34	$ 37.34	LF								
Culvert, Concrete, 18"	D - 35	$ 44.51	LF								
Culvert, Concrete, 24"	D - 36	$ 61.07	LF								
Culvert, Concrete, 30"	D - 37	$ 104.18	LF								
Culvert, Concrete, 36"	D - 38	$ 137.63	LF								
Culvert, Concrete, 42"	D - 39	$ 158.42	LF								
Culvert, Concrete, 48"	D - 40	$ 175.94	LF								
Culvert, CPP, 6"	D - 41	$ 10.70	LF								
Culvert, CPP, 8"	D - 42	$ 16.10	LF								
Culvert, CPP, 12"	D - 43	$ 20.70	LF								
Culvert, CPP, 15"	D - 44	$ 23.00	LF								
Culvert, CPP, 18"	D - 45	$ 27.60	LF								
Culvert, CPP, 24"	D - 46	$ 36.80	LF								
Culvert, CPP, 30"	D - 47	$ 48.30	LF								
Culvert, CPP, 36"	D - 48	$ 55.20	LF								
Ditching	D - 49	$ 8.08	CY								
Flow Dispersal Trench (1,436 base+)	D - 50	$ 25.99	LF								
French Drain (3' depth)	D - 51	$ 22.60	LF								
Geotextile, laid in trench, polypropylene	D - 52	$ 2.40	SY								
Infiltration pond testing	D - 53	$ 74.75	HR								
Mid-tank Access Riser, 48" dia, 6' deep	D - 54	$ 1,605.40	Each								
Pond Overflow Spillway	D - 55	$ 14.01	SY								
Restrictor/Oil Separator, 12"	D - 56	$ 1,045.19	Each								
Restrictor/Oil Separator, 15"	D - 57	$ 1,095.56	Each								
Restrictor/Oil Separator, 18"	D - 58	$ 1,146.16	Each								
Riprap, placed	D - 59	$ 39.08	CY								
Tank End Reducer (36" diameter)	D - 60	$ 1,000.50	Each								
Trash Rack, 12"	D - 61	$ 211.97	Each								
Trash Rack, 15"	D - 62	$ 237.27	Each								
Trash Rack, 18"	D - 63	$ 268.89	Each								
Trash Rack, 21"	D - 64	$ 306.84	Each								

SUBTOTAL _____ _____ _____ _____

*KCC 27A authorizes only one bond reduction.

Check out the DDES Web site at www.metrokc.gov/ddes

Site Improvement Bond Quantity Worksheet

				Existing Right-of-way		Future Public Road Improvements & Drainage Facilities		Private Improvements		Bond Reduction*	
		Unit Price	Unit	Quant.	Price	Quant.	Cost	Quant.	Cost	Quant. Complete	Cost
PARKING LOT SURFACING											
	No.										
2" AC, 2" top course rock & 4" borrow	PL - 1	$ 15.84	SY								
2" AC, 1.5" top course & 2.5" base cour	PL - 2	$ 17.24	SY								
4" select borrow	PL - 3	$ 4.55	SY								
1.5" top course rock & 2.5" base course	PL - 4	$ 11.41	SY								
WRITE-IN-ITEMS											
(Such as detention/water quality vaults.)	No.										
	WI - 1		Each								
	WI - 2		SY								
	WI - 3		CY								
	WI - 4		LF								
	WI - 5		FT								
	WI - 6										
	WI - 7										
	WI - 8										
	WI - 9										
	WI - 10										

SUBTOTAL				
SUBTOTAL (SUM ALL PAGES):				
30% CONTINGENCY & MOBILIZATION:				
GRANDTOTAL:				
COLUMN:	**B**	**C**	**D**	**E**

*KCC 27A authorizes only one bond reduction.

Check out the DDES Web site at www.metrokc.gov/ddes

Unit prices updated: 02/12/02
Version: 4/22/02
Report Date: 5/26/2005

KING COUNTY, WASHINGTON
SURFACE WATER DESIGN MANUAL

REFERENCE 8-I

MAINTENANCE AND DEFECT AGREEMENT

MAINTENANCE AND DEFECT AGREEMENT (Two Years) For public roads and drainage facilities	Applicant's Name and Address
Agreement Number	Project Number and Name
Guarantee Amount	Site Location/Section

This AGREEMENT is made and entered into this _____ day of _____, 19____, between the King County Department of Transportation, Road Services Division, hereinafter called the COUNTY, and the above named APPLICANT, hereinafter called APPLICANT.

Basis for AGREEMENT:

WHEREAS the undersigned APPLICANT has constructed public roads and/or drainage facilities in connection with the above-referenced project; and

WHEREAS the APPLICANT has agreed to secure the successful maintenance and operation of said improvements for the referenced projects pursuant to King County Ordinance 12020 and King County Code Title 14 and 19;

NOW THEREFORE, the APPLICANT hereby agrees and binds itself and it's legal representatives, successors, and assigns as follows:

Terms of the AGREEMENT:

1. The improvements constructed by the APPLICANT or his representative shall successfully operate and shall remain free of defects in design, workmanship, materials, and design for a period of two years from the date of satisfactory completion of the improvements or final plat approval, whichever is later. As used in this AGREEMENT, the term "defects" includes but is not limited to, damage resulting from construction activities and/or use during the two year period.
2. The APPLICANT is responsible for maintenance of the public road and drainage facilities, including the roadway surface for the two year period from the date of satisfactory construction approval or final plat approval, whichever is later.
3. In the event of any failure of the improvements to satisfactorily operate or in the event of a defect in design, workmanship or materials, the APPLICANT shall promptly and adequately repair and/or correct the failure or defect.
4. The COUNTY will perform maintenance inspections during the two year period.
5. During the two year period upon notification by the COUNTY, the APPLICANT shall correct and/or make repairs to the right-of-way improvements within the time period specified by the COUNTY when defects in the design, workmanship, or materials occur.
6. In the event the COUNTY determines that repairs must be performed immediately to prevent risk to person(s) and property, the COUNTY may make necessary repairs and the costs of those repairs shall be paid by the APPLICANT upon demand.
7. The APPLICANT shall pay all required fees in accordance with King County Code.
8. At the end of the two year period, the APPLICANT shall clean the drainage system prior to the COUNTY's final inspection.

Agreement Number	Project Number and Name

9. If, at the conclusion of the two year period, King County, at its sole discretion, determines that the improvements are not adequately maintained, the APPLICANT shall perform prompt maintenance to the COUNTY's satisfaction. In the event this maintenance is not performed within the time period specified by the COUNTY, the COUNTY will invoke the enforcement and Notice and Order processes found in K.C.C. 23.12.
10. Any failure by the APPLICANT to comply with the terms of this AGREEMENT in a timely manner shall constitute default. Any action or inaction by King County following any default in any term or condition of this AGREEMENT shall not be deemed to waive any rights of King County pursuant to this AGREEMENT.
11. The APPLICANT shall indemnify and hold the COUNTY and it's agents, employees and/or officers harmless from and shall process and defend at it's own expense all claims, damages, suits at law or equity, actions, penalties, losses, or costs of whatsoever kind or nature, brought against the COUNTY arising out of, in connection with, or incident to the execution of this AGREEMENT and/or the APPLICANT's performance or failure to perform any aspect of the AGREEMENT. Provided, however, that if such claims are caused by or result from concurrent negligence of the APPLICANT and the COUNTY, it's agents, employees and/or officers, this provision shall be valid and enforceable only to the extent of the negligence of the APPLICANT, and provided further, that nothing herein shall require the APPLICANT to hold harmless or defend the COUNTY from any claim arising from the sole negligence of the COUNTY's agents, employees and/or officers.
12. In the event that any party deems it necessary to institute legal action or proceedings to enforce any right or obligation under this AGREEMENT, the parties hereto agree that any such action or proceeding shall be brought in a court of competent jurisdiction situated in King County, Washington.

Release Requirements: This AGREEMENT shall remain in full force and effect and shall not be released until all terms of this AGREEMENT have been completed to the satisfaction of the King County Road Engineer or his/her designee.

IN WITNESS THEREOF, the parties hereto have executed this AGREEMENT as of the day and year first above written.

APPLICANT

By Title Date

Received for King County By Date

1/1/05

KING COUNTY, WASHINGTON
SURFACE WATER DESIGN MANUAL

REFERENCE 8-J

DECLARATION OF COVENANT

After Recording return to:

_____
_____
_____

DECLARATION OF COVENANT AND GRANT OF EASEMENT

IN CONSIDERATION of the approved King County _____ permit for application No. _____ relating to real property described as follows:_____

_____

_____.

The undersigned as Grantor(s), declares that the above described property is hereby subject to an easement for a system of stormwater facilities and BMPs, and hereby dedicates, covenants and agrees as follows:

1. King County shall have the right to ingress and egress over those portions not contained in Exhibit "A" to access such easement area for inspection of and to reasonably monitor the performance, operational flows, or defects in accordance with and [as presented in King County Code Section 9.04.120].

2. If King County determines that maintenance or repair work is required to be done to the system, the Director of the Water and Land Resources Division of the King County

Department of Natural Resources shall give notice of the specific maintenance and/or repair work required pursuant to K.C.C 9.04.120. The Director shall also set a reasonable time in which such work is to be completed by the Grantor(s), its heirs or assigns. If the above required maintenance or repair is not completed with the time set by the Director, the County may perform the required maintenance or repair. Written notice will be sent to the Grantor(s) stating the County's intention to perform such maintenance. Maintenance work will not commence until at least seven (7) days after such notice is mailed. If, within the sole discretion of the Water and Land Resources Division Director, there exists an imminent or present danger, said seven (7) day notice period will be waived and maintenance and/or repair work will begin immediately.

3. If at any time King County reasonably determines that any existing drainage facility or flow control BMP creates any of the conditions listed in K.C.C. 9.04.130 and herein incorporated by reference, the Water and Land Resources Division Director may take measures specified therein.

4. The Grantor(s) shall assume all responsibility for the cost of any maintenance and for repairs to the system. Such responsibility shall include reimbursement to the County within thirty (30) days of the receipt of the invoice for any such work performed. Overdue payments will require payment of interest at the current legal rate as liquidated damages. If legal action ensues, the prevailing party is entitled to costs or fees

5. The Grantor(s) is (are) hereby required to obtain written approval from the Water and Land Resources Division Director of the King County Department of Natural Resources prior to filling, piping, cutting, or removing vegetation (except in routine landscape maintenance) in open vegetated drainage facilities (such as swales, channels, ditches, ponds, etc.), or performing any alterations or modifications to the drainage facilities contained within said drainage easement. Any notice or consent required to be given or otherwise provided for by the provisions of this

Agreement shall be effective upon personal delivery, or three (3) days after mailing by Certified Mail, return receipt requested.

6. This agreement constitutes the entire agreement between the parties, and supercedes all prior discussions, negotiations, and all agreements whatsoever whether oral or written.

This covenant is intended to protect the value and desirability of the real property described above, and shall insure to the benefit of all the citizens of King County, and shall be binding on all heirs, successors and assigns.

_____
OWNER

_____
OWNER

STATE OF WASHINGTON)
COUNTY OF KING)ss.

On this day personally appeared before me:

_____, to me known to be the individual(s) described in and who executed the within and foregoing instrument and acknowledged that they signed the same as their free and voluntary act and deed, for the uses and purposes therein stated.

Given under my hand and official seal this _____ day of _____, 20__.

_____

_____
Printed name
Notary Public in and for the State of Washington,
residing at _____

My appointment expires _____

KING COUNTY, WASHINGTON
SURFACE WATER DESIGN MANUAL

REFERENCE 8-K

DRAINAGE RELEASE COVENANT

After Recording return to:

_____
_____
_____

DRAINAGE RELEASE COVENANT

This agreement made this _____ day of _____, 20_____, _____, hereinafter called the GRANTOR(s), and KING COUNTY, a political subdivision of the State Of Washington, hereinafter called the GRANTEE, and whereas the GRANTOR represents and warrants that it is the owner in fee of that certain parcel of land, described as follows:

_____

_____

_____

_____,

and whereas the GRANTEE is implementing an approved drainage plan for the project known as _____, permit no. _____, on lands located at the above description, which said plan shall divert surface and storm waters from their natural

course and cause them to flow (onto)/(away from) the lands of GRANTOR; NOW THEREFORE in consideration of either GRANTEE approval of diversion of said plan and/or other valuable consideration, receipt of which is hereby acknowledged, the GRANTOR hereby willfully acknowledges, agrees and consents to the diversion of surface and storm waters (onto)/(away from) its lands and to hold and release GRANTEE harmless for any damage that may be caused by such diversion of flow. This release shall be a covenant running with the land and shall be binding upon the GRANTOR, its heirs, successors and assigns forever.

IN WITNESS THEREOF, the parties hereto have hereunto set their hands:

_____
GRANTOR

_____
GRANTOR

STATE OF WASHINGTON)
COUNTY OF KING)ss.

On this day personally appeared before me:

_____, to me known to be the individual(s) described in and who executed the within and foregoing instrument and acknowledged that they signed the same as their free and voluntary act and deed, for the uses and purposes therein stated.

Given under my hand and official seal this ____ day of _____, 20___.

_____

_____
Printed name
Notary Public in and for the State of Washington,
residing at _____

My appointment expires _____

KING COUNTY, WASHINGTON
SURFACE WATER DESIGN MANUAL

REFERENCE 8-L

DRAINAGE EASEMENT

After Recording return to:

_____
_____
_____

DRAINAGE EASEMENT

For a valuable consideration, receipt of which is hereby acknowledged, the GRANTOR(s),_____, the owner(s) in fee of that certain parcel of land, described as follows:

_____

_____

_____,

hereby grant and convey a(an) [exclusive/non-exclusive] easement (attached and incorporated as Exhibit "A") to King County, a political subdivision of the State of Washington, (GRANTEE) for the purpose of conveying, storing, managing and facilitating surface and storm water per an engineering plan approved by King County for the project known as:

_____

_____,

together with the right for King County to enter said drainage easement at reasonable times for the purpose of inspecting, operating, maintaining, repairing and improving the drainage facilities contained herein. Note that except for facilities which have been formally accepted for

maintenance by King County, maintenance and repair of drainage facilities on private property is the responsibility of the property owner.

The GRANTOR(s) of said parcel is (are) required to obtain prior written approval from the Water and Land Resources Division of the King County Department of Natural Resources prior to filling, piping, cutting or removing vegetation (except for routine landscape maintenance such as lawn mowing) in open vegetated drainage facilities (such as swales, channels, ditches, ponds, etc.), or performing any alterations or modifications to the drainage facilities, contained within said drainage easement.

This easement is intended to facilitate reasonable access to the drainage facilities. It is binding upon the GRANTOR(s), its heirs, successors and assigns.

_____
GRANTOR

_____
GRANTOR

STATE OF WASHINGTON)
COUNTY OF KING)ss.

On this day personally appeared before me:

_____, to me known to be the individual(s) described in and who executed the within and foregoing instrument and acknowledged that they signed the same as their free and voluntary act and deed, for the uses and purposes therein stated.

Given under my hand and official seal this _____day of _____, 20___.

_____

_____
Printed name
Notary Public in and for the State of Washington,
residing at _____

My appointment expires _____

KING COUNTY, WASHINGTON
SURFACE WATER DESIGN MANUAL

REFERENCE 8-M

SMALL PROJECT FLOW CONTROL BMP DECLARATION OF COVENANT AND GRANT OF EASEMENT

RECORDING REQUESTED BY AND
WHEN RECORDED MAIL TO:

_____

_____

_____

_____

RECORDING COVER SHEET

DECLARATION OF COVENANT AND GRANT OF EASEMENT

Grantor: _____

Grantee: _____

Legal Description: _____

_____

_____

Additional Legal(s) on: _____

Assessor's Tax Parcel ID#: _____

_____

_____

DECLARATION OF COVENANT AND GRANT OF EASEMENT
For Stormwater Flow Control Best Management Practices

IN CONSIDERATION of the following approved King County (check one of the following) ❑ residential building permit, ❑ commercial building permit, ❑ clearing and grading permit, ❑ subdivision permit, or ❑ short subdivision permit for Application No. _____ relating to real property ("Property") legally described as follows:

_____

_____

_____

_____

The Grantor(s), the owner(s) in fee of the above described parcel of land, hereby covenants with King County, a political subdivision of the state of Washington its successors in interest and assigns ("King County"), that it will observe, consent to, and abide by the conditions and obligations set forth and described in Paragraphs 1 and 2 and 4 through 7 below with regard to the Property, and hereby grants an access easement on and to the Property to King County, for the purposes described in Paragraph 3 below. Grantor(s) hereby grants, covenants, and agrees as follows:

1. Owner(s) of the Property shall retain, uphold, and protect the stormwater management devices, features, pathways, limits, and restrictions, known as flow control best management practices ("Flow Control BMPs"), shown on the approved Flow Control BMP Site Plan for the Property attached hereto and incorporated herein as Exhibit A.

2. Owner(s) of the Property shall at their own cost, operate, maintain, and keep in good repair, the Property's Flow Control BMPs as described in the approved Design and Maintenance Details for each BMP attached hereto and incorporated herein as Exhibit B.

3. King County shall have a nonexclusive perpetual access easement on the Property in order to ingress and egress over the Property for the sole purposes of inspecting and monitoring the

Property's Flow Control BMPs, and if applicable in accordance with the terms of Paragraph 4 below, performing any corrective work required to bring the Property's Flow Control BMPs into compliance with Title 9 of the King County Code.

4. If King County determines that maintenance, repair, restoration, and/or mitigation work is required to be done to the Flow Control BMPs and has not been performed by the Property owner(s), the Director of the Water and Land Resources Division of the King County Department of Natural Resources and Parks shall give notice to the Property owner (s) of the specific maintenance, repair, restoration, and/or mitigation work (Work) required pursuant to Title 9 of the King County Code. The Manager shall also set a reasonable time in which the Work is to be completed by the Property owner(s). If the Work is not completed within the time set by the Division Director, King County may perform the required Work. Written notice will be sent to the Property owner(s) stating King County's intention to perform the Work. Performance of the Work by King County will not commence until at least seven (7) days after such notice is mailed. If, within the sole discretion of the Water and Land Resources Division Director, there exists an imminent or present danger, the owner hereby waives the seven (7) day notice period and the Work will begin immediately.

5. The owner(s) of the Property shall assume all responsibility for the cost of any Work required to be done to the Flow Control BMPs. Such responsibility shall include reimbursement to King County within thirty (30) days of the receipt of the invoice for any such Work performed by King County in accordance with the terms of Paragraph 3 above. Overdue payments will require payment of interest at the current legal rate as liquidated damages. In the event that King County does not receive reimbursement within the required time frame, it may elect to place a lien on the Property and act upon the lien in accordance with the terms and procedures specified in Chapter 23.40 of the King County Code, as amended from time to time. If legal action is taken to enforce the provisions of this Paragraph, the prevailing party is entitled to costs and attorney's fees.

6. Apart from performing routine landscape maintenance, the Property owner(s) is (are) hereby required to obtain written approval from the Water and Land Resources Division Manager of the King County Department of Natural Resources and Parks prior to performing any alterations or modifications to the Flow Control BMPs. Any notice or consent required to be given or otherwise provided for by the provisions of this Declaration of Covenant and Grant of Easement shall be effective upon personal delivery, or three (3) days after mailing by Certified Mail, return receipt requested, whichever occurs sooner.

7. This Declaration of Covenant and Grant of Easement is intended to promote the efficient and effective management of surface water drainage on the Property, and it shall inure to the benefit of all the citizens of King County, its successors and assigns. This Declaration of Covenant and Grant of Easement shall run with the land and be binding upon Grantor(s), and Grantor's (s') successors in interest and assigns.

8. This Declaration of Covenant and Grant of Easement may be terminated by execution of a written agreement by Grantor(s) and King County expressing their mutual agreement to terminate this Declaration of Covenant and Grant of Easement.

IN WITNESS WHEREOF, this Declaration of Covenant and Grant of Easement is executed

this _____day of _____, 20___.

By _____

Its _____

By _____

Its _____

STATE OF WASHINGTON)
)SS
COUNTY OF KING)

On this _____ day of _____, 20___, before me, the undersigned, a Notary Public in and for the State of _____, duly commissioned and sworn personally appeared , to me known to be the individual described in and who executed the foregoing instrument, and acknowledged to me that he signed and sealed the said instrument as h free and voluntary act and deed for the uses and purposes therein mentioned.

WITNESS my hand and official seal hereto affixed the day and year in this certificate above written.

_____

_____
Printed name
Notary Public in and for the State of Washington,
residing at _____

My appointment expires _____

KING COUNTY, WASHINGTON
SURFACE WATER DESIGN MANUAL

REFERENCE 8-N

IMPERVIOUS SURFACE LIMIT COVENANT

After Recording return to:

_____
_____
_____

IMPERVIOUS SURFACE LIMIT COVENANT

IN CONSIDERATION OF the approved King County _____ permit for application No. _____ relating to real property legally described as follows:

_____
_____
_____
_____

The undersigned as Grantor(s), declares that the above described property is hereby established as having a limit to the amount of impervious surface allowed on the property for the purpose of limiting stormwater flows and is subject to the following restrictions.

The Grantor hereby covenants and agrees as follows: no more than _____ square feet of impervious surface coverage is allowed on the property. Impervious surface means a hard surface area that either prevents or retards the entry of water into the soil mantle as under natural conditions before development; or that causes water to run off the surface in greater quantities or at an increased rate of flow from the flow present under natural conditions prior to development. Common impervious surfaces include, but are not limited to, roof, walkways, patios, driveways, parking lots, or storage areas, areas that are paved, graveled or made of packed or oiled earthen materials or other surfaces that similarly impede the natural infiltration of surface and storm

water. King County shall have a nonexclusive perpetual access easement on the Property in order to ingress and egress over the Property for the sole purposes of inspecting and monitoring the Property's impervious surface coverage.

This easement/restriction is binding upon the GRANTOR(s), its heirs, successors and assigns unless or until a new drainage or site plan is reviewed and approved by the Department of Development and Environmental Services or its successor.

_____

GRANTOR

_____

GRANTOR

STATE OF WASHINGTON)
COUNTY OF KING) ss.

On this date, personally appeared before me:

_____ , to me known to be the individual(s) described in and who executed the within and foregoing instrument and acknowledged that they signed the same as their free and voluntary act and deed, for the uses and purposes therein stated.

Given under my hand and official seal this_____ day of _____, 20___.

_____
Printed Name
NOTARY PUBLIC in and for the State of
Washington, residing at _____
My Commission Expires: _____

KING COUNTY, WASHINGTON
SURFACE WATER DESIGN MANUAL

REFERENCE 8-O

CLEARING LIMIT COVENANT

After Recording return to:

_____
_____
_____

CLEARING LIMIT COVENANT

IN CONSIDERATION OF the approved King County _____ permit for application No. _____ relating to real property legally described as follows:

_____
_____
_____
_____

The undersigned as Grantor(s), declares that the above described property is hereby established as having a native growth retention area for the purpose of dispersing and treating stormwater flows and is subject to restrictions applying to vegetation removal in all designated areas shown in Attachment A, and hereby covenants and agrees as follows:

1) Any alterations to sensitive areas, their buffers and native growth retention areas shall be pursuant to applicable King County Code.
2) The property within the native growth protection area (shown in Attachment A) shall be maintained in a forested condition, with the exception of open water and existing non-forested native wetland plant communities. The following activities are allowed:

a) Removal of noxious weeds and non-native vegetation using hand equipment provided that those areas are replanted with appropriate native vegetation.
b) Removal of dangerous and diseased trees.
c) Passive recreation and related activities including trails, nature viewing, fishing, camping areas, and other similar activities that do not require permanent structures, provided that cleared areas and areas of compacted soil associated with these areas and facilities do not exceed eight percent of the native growth retention area.
d) The native growth retention area may contain utilities and utility easements including flow control BMPs, but not including septic systems.
e) Limited trimming and pruning of vegetation for the creation and maintenance of views per applicable King County Code.
f) Timber harvest in accordance with a King County-approved forest management plan and appropriate permits.

Note that for all the above activities forested hydrologic conditions and soil stability shall be maintained. King County shall have a nonexclusive perpetual access easement on the Property in order to ingress and egress over the Property for the sole purposes of inspecting and monitoring the Property's native growth retention area.

This easement/restriction is binding upon the GRANTOR(s), its heirs, successors and assigns unless or until a new drainage or site plan is reviewed and approved by the Department of Development and Environmental Services or its successor.

_____

GRANTOR

_____

GRANTOR

STATE OF WASHINGTON)
COUNTY OF KING) ss.

On this date, personally appeared before me:

_____ , to me known to be the individual(s) described in and who executed the within and foregoing instrument and acknowledged that they signed the same as their free and voluntary act and deed, for the uses and purposes therein stated.

Given under my hand and official seal this_____ day of _____, 20___.

_____
Printed Name
NOTARY PUBLIC in and for the State of
Washington, residing at _____
My Commission Expires: _____

KING COUNTY, WASHINGTON
SURFACE WATER DESIGN MANUAL

REFERENCE 8-P

RIVER PROTECTION EASEMENT

AFTER RECORDING RETURN TO:

King County Property Services Division
500A King County Administration Building
500 Fourth Avenue
Seattle, WA 98104

Document Title: River Protection Easement
Reference Number of Related Document:
Grantor(s):
Grantee(s): King County
Legal Description:
Assessor's Tax Parcel Number:

RIVER PROTECTION EASEMENT

For valuable consideration, receipt of which is hereby acknowledged, the GRANTOR(S),

_____
owner(s) in fee of that certain parcel of land (the "Property"), legally described as follows:
_____
_____
_____
_____

hereby grant(s) to KING COUNTY, a political subdivision of the State of Washington , its successors and assigns, agents and licensees (GRANTEE), a perpetual easement for the purposes of accessing and constructing, inspecting, monitoring, reconstructing, maintaining, repairing, modifying, and removing river bank protection and/or other flood related works, including

installing, inspecting, maintaining and removing all vegetation and any other appurtenances thereto across, in, under, on, over and upon the following portions of the above described Property:

> All portions of the above described parcel that are riverward of a line that is parallel to and thirty (30) feet landward of the stable top of the river bank on the _____ River ("Easement Area"), as constructed or reconstructed, together with reasonable ingress and egress upon the Property to access the Easement Area.

Grantee shall have the right at such time as may be necessary and at the Grantee's sole discretion, to enter upon the Property and to have unimpeded access to, in and through the Easement Area for the purposes of exercising the Grantee's rights as described herein.

Grantor agrees not to plant non-native vegetation within the Easement Area and not to remove or otherwise alter any improvements installed by Grantee, including any native vegetation that may be planted and any flood protection works that may be constructed, within the Easement Area, without the prior approval of Grantee. Grantor further agrees not to use herbicides within the Easement Area without the prior approval of Grantee. Nothing contained herein shall be construed as granting any license, permit or right, otherwise required by law, to Grantor with respect to the Property and the Easement Area.

For the purposes of this river protection easement, the term "native vegetation" shall mean vegetation comprised of plant species, other than noxious weeds (as identified on the State of Washington noxious weed list found at Washington Administrative Code Chapter 16-750, as amended from time to time), which are indigenous to the coastal region of the Pacific Northwest and which reasonably could have been expected to naturally occur at the site.

Neither Grantor nor Grantee is hereby obligated to future maintenance, repair or other action related to the above-described exercise of easement rights. This river protection easement and/or any flood related works constructed or to be constructed within the Easement Area shall not be construed as granting any rights to any third person or entity, or as a guarantee of any protection from flooding or flood damage, and nothing contained herein shall be construed as waiving any immunity to liability granted to Grantee by any state statute, including Chapter 86.12 of the Revised Code of Washington, or as otherwise granted or provided for by law.

The rights, conditions, and provisions of this easement shall inure to the benefit of and be binding upon the heirs, executors, administrators, and successors in interest and assigns of Grantor and Grantee.

_____	_____
GRANTOR	GRANTOR

STATE OF WASHINGTON)
) ss.
COUNTY OF KING)

On this _____ day of _____, 20___, before me, the undersigned, a Notary Public in and for the State of Washington, duly commissioned and sworn, personally appeared _____, to me known to be the individual described in and who executed the foregoing instrument, and acknowledged to me that he/she signed and sealed the said instrument as _____ free and voluntary act and deed for the uses and purposes therein mentioned.

Given under my hand and official seal the _____ day of _____, 20___.

_____
NOTARY PUBLIC in and for the
State of Washington, residing
at _____
My commission expires _____

J\mi20-easement

KING COUNTY, WASHINGTON
SURFACE WATER DESIGN MANUAL

REFERENCE 9

INTERIM CHANGES TO REQUIREMENTS

9-A Blanket Adjustments

9-B Administrative Changes

None at this time.