US Army Corps
of Engineers ®
Seattle District

PL 84-99 LEVEE REHABILITATION DYKSTRA, GREEN RIVER

AUBURN, WASHINGTON

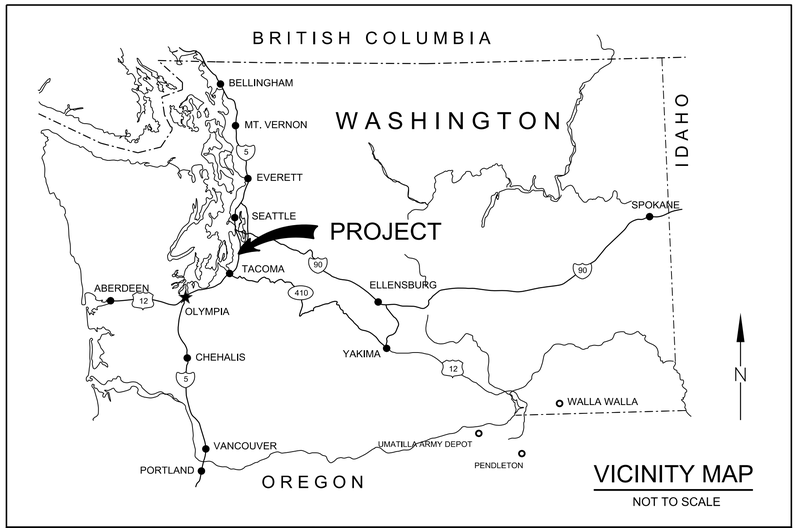

VICINITY MAP
NOT TO SCALE

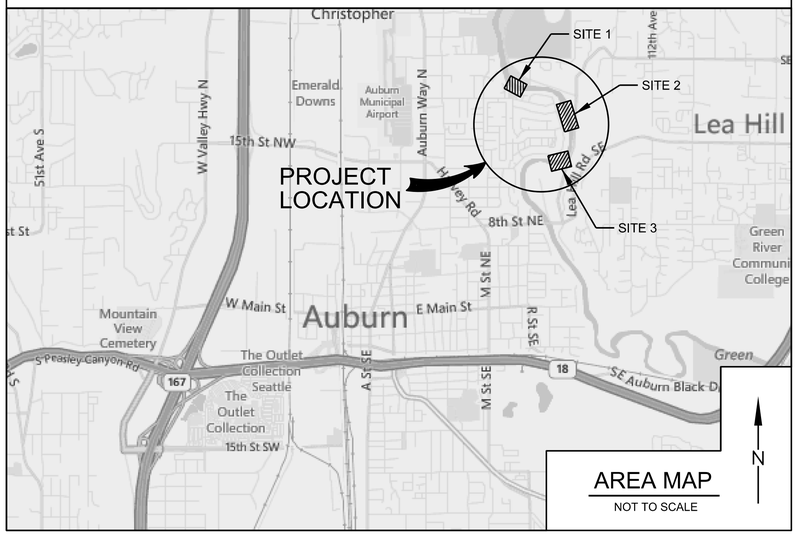

AREA MAP
NOT TO SCALE

DRAWING INDEX

SHEET NUMBER	SHEET IDEN.	TITLE
1	G-001	TITLE, MAPS, AND DRAWING INDEX
2	C-001	LEGEND, ABBREVIATIONS, AND GENERAL NOTES
3	C-002	HAUL ROUTE
4	C-003	GENERAL SITE PLAN
5	C-101	EXISTING CONDITIONS SITE 1
6	C-102	EXISTING CONDITIONS SITE 2(A)
7	C-103	EXISTING CONDITIONS SITE 2(B)
8	C-104	EXISTING CONDITIONS SITE 3
9	C-105	SITE PLAN SITE 1
10	C-106	SITE PLAN SITE 2(A)
11	C-107	SITE PLAN SITE 2(B)
12	C-108	SITE PLAN SITE 3
13	C-301	CROSS SECTIONS 1
14	C-302	CROSS SECTIONS 2
15	C-303	CROSS SECTIONS 3
16	C-501	SITE 1 DETAILS
17	C-502	SITE 2 DETAILS
18	C-503	SITE 3 DETAILS

FY15 GRN-01-14

SAFETY FIRST

IF SHEET MEASURES LESS THAN 22" X 34" IT IS A REDUCED PRINT. REDUCE SCALE ACCORDINGLY.

US Army Corps of Engineers ® Seattle District

Date: 31 MAR 2014

File No.: E-51-4-69

GUY L. GREEN, P.E. — Chief, Design Branch — Date

JOANN T. WALLS, P.E. — Chief, Engineering Division — Date

Submitted by: LEAH WICKSTROM, P.E. — Project Manager — Date

Reviewed by: ANIL L. NISARGAND, P.E. — Specs and Tech Review — Date

U.S. ARMY CORPS OF ENGINEERS
SEATTLE DISTRICT
SEATTLE, WASHINGTON

Prepared by: JENNIFER L. WEST, P.E. — Chief, Civil Section — Date

PL 84-99 LEVEE REHABILITATION, DYKSTRA
TUKWILA, WASHINGTON

TITLE, LOCATION AND DRAWING INDEX

SHEET IDENTIFICATION
G-001
SHEET 1 OF 18

DESIGN FILE: I:\AECDesigns\FY15_PN448194_GRDK\Con_Docs\CAD_Sheets\General\PN448192_GRDK-G-001CVR.dgn

DATE AND TIME PLOTTED: 3/20/2015

CIVIL NOTES

LINETYPES

20 — EXISTING CONTOURS

20 — PROPOSED CONTOURS

CONSTRUCTION LIMITS

LEGEND

SLOPE ARROWS

EL 21.00 — SPOT ELEVATION

TREE/ TREES

CONSTRUCTION ACCESS/ STAGING

LEVEE FILL

TOP SOIL

2" - 4" QUARRY SPALLS

1" MINUS GRAVEL

CLASS III RIP RAP

3' LIVE WILLOW STAKES

ABBREVIATIONS

APPROX	APPROXIMATE
CB	CATCH BASIN
CMP	CORRUGATED METAL PIPE
EL	ELEVATION
FH	FIRE HYDRANT
GNV	GENERIC NATIVE VEGETATION
H	HORIZONTAL
LF	LINEAR FOOT/FEET
MH	MANHOLE
N	NORTH
NAVD	NORTH AMERICAN VERTICAL DATUM
NTS	NOT TO SCALE
OC	ON CENTER
OHW	ORDINARY HIGH WATER
PI	POINT INTERCEPT
POB	POINT OF BEGINNING
POE	POINT OF ENDING
SPEC	SPECIFICATION
STA	STATION
TYP	TYPICAL
V	VERTICAL
WSDOT	WASHINGTON STATE DEPARTMENT OF TRANSPORTATION

DRAFTING

X / C-304 — DIRECTION OF VIEW; LETTER INDICATES CIVIL SECTION NUMBER INDICATES ELEV OR DETAIL; PLATE NUMBER WHERE SECTION/DETAIL IS DRAWN

X / C-502 — NUMBER INDICATES DETAIL NO.; PLATE NUMBER WHERE DETAIL IS DRAWN

N — NORTH ARROW

0 20 40 — GRAPHIC SCALE (FEET)

SURVEY/DATUM

MAPPING COMPILED FROM FEBRUARY 2006 AERIAL PHOTOS. MAPPING BY 3Di WEST FOR KING COUNTYDNR AND PARKS.

MAP SCALE 1"=100', CONTOUR INTERVAL: 2 FOOT.

HORIZONTAL DATUM: NAD83/91 (HARN) WA STATE PLANE NORTH ZONE (FEET).

VERTICAL DATUM: NAVD 88.

MAP HAS NOT BEEN COMPREHENSIVELY VERIFIED BY FIELD CHECKS.

UTILITIES CONTACT INFORMATION

COMPANY	PHONE
CALL-BEFORE-YOU-DIG	(800) 424-5555
PUGET SOUND ENERGY	(425) 392-6412
CITY OF TUKWILA	(206) 433-0179

LEVEE CONSTRUCTION NOTES

1. CONTRACTOR SHALL VERIFY ALL DIMENSIONS IN THE FIELD BEFORE STARTING WORK AND SHALL IMMEDIATELY NOTIFY THE CORPS OF ENGINEERS OF ANY DISCREPANCIES WITH RESPECT TO THE PLANS.

2. BEFORE EXCAVATION OR TRENCHING, CONTRACTOR SHALL SUBMIT A UTILITY LOCATE REQUEST (CALL BEFORE YOU DIG) THROUGH THE STATE OF WASHINGTON UTILITY NOTIFICATION CENTER IN ACCORDANCE WITH STATE OF WASHINGTON LAW: CHAPTER 19.122 RCW - UNDERGROUND UTILITIES. NO EXCAVATION MAY BEGIN UNTIL THE TIME STATED ON THE LOCATE TICKET. THE ONE-CALL PHONE NUMBER FOR UTILITY LOCATES IS: 1-800-424-5555.

3. ANY DAMAGE TO EXISTING SUBSURFACE OR SURFACE FACILITIES SHALL BE REPAIRED BY THE CONTRACTOR AT NO COST TO THE OWNER.

4. THE HORIZONTAL AND VERTICAL LOCATIONS OF EXISTING UTILITIES AND IMPROVEMENTS ARE APPROXIMATE. THE CONTRACTOR SHALL VERIFY THE EXACT LOCATION OF ALL UTILITIES AND IMPROVEMENTS PRIOR TO EXCAVATION TO AVOID DAMAGE. THE CONTRACTOR IS RESPONSIBLE FOR PROTECTING AND PRESERVING THE INTEGRITY OF EXISTING SITE UTILITIES DURING CONSTRUCTION.

5. ALL DISTANCES SHOWN ON THE DRAWINGS AND DESCRIBED IN THE SPECIFICATION SHALL BE INTERPRETED TO REFER TO HORIZONTALLY AND VERTICALLY PROJECTED PLANES, UNLESS OTHERWISE NOTED.

6. THE CONTRACTOR SHALL BE RESPONSIBLE FOR FULL RESTORATION OF ALL EXISTING FEATURES DISTURBED DURING CONSTRUCTION TO THEIR ORIGINAL CONDITION, UNLESS OTHERWISE INDICATED BY THE CONSTRUCTION DOCUMENTS.

7. PRELIMINARY CLEARING AND GRUBBING, STAGING AREAS AND CONSRUCTION ACCESS RAMP

   (A) ESTABLISH CONSTRUCTION STAGING AREAS, AS SHOWN ON PLANS.

   (B) INSTALL TEMPORARY EROSION CONTROL MEASURES FOR PHASES OF WORK TO BE CONDUCTED. WORKING AS CONSTRUCTION ADVANCES, CONTINUE TO INSTALL SILT FENCING ALONG FULL LENGTH OF DISTURBED AREAS OF THE PROJECT SITE. INSTALL EROSION CONTROL MEASURES AS NEEDED TO PREVENT THE DISCHARGE OR ACCUMULATION OF SEDIMENT INTO THE RIVER, ADJACENT SWALES, CATCH BASINS AND STORM DRAINS AND OFF-SITE. ACCUMULATION OF SEDIMENT IN ADJACENT SWALES OR STORM DRAINS WILL BE MONITORED DAILY AND CLEANED TO ENSURE CONTINUED SERVICE THROUGHTOUT CONSTRUCTION.

   (C) CLEAR AND GRUB PROJECT SITE. DISPOSE OF VEGETATION AND OTHER UNSUITABLE MATERIALS IN AN APPROVED AND PERMITTED OFF-SITE LOCATION.

8. RESTORATION AND TEMPORARY CONSTRUCTION WORK AREAS

   (A) RESTORE ASPHALT ON ALL DISTURBED AREAS, INCLUDING TEMPORARY CONSTRUCTION ACCESS AND WORK AREAS.

   (B) HYDROSEED ALL DISTURBED SITE AREAS PRIOR TO END OF CONSTRUCTION.

   (C) RESTORE TEMPORARY WORK AREAS TO PRE-CONSTRUCTION CONDITION. REPLACE ANY DAMAGED CURBS, PAINT STRIPES, ETC. IN KIND.

   (D) RESTORE ACCESS ROAD CONDITIONS AND FEATURES (FENCING, GATES, ETC...) TO PRE-CONSTRUCTION CONDITIONS.

9. CONSTRUCTION

   (A) ALL IN-WATER PROJECT WORK SHALL BE COMPLETED DURING THE FISH WINDOW: AUGUST 1 - AUGUST 31.

   (B) THE LIMITS OF THE STAGING AREA WILL BE DELINEATED IN THE FIELD BEFORE THE START OF CONSTRUCTION. FOLLOWING CONSTRUCTION, CONSTRUCTION MATERIALS WILL BE REMOVED AND ANY DISTURBED BARE SOIL IN ANY UNPAVED PORTION OF THE STAGING AREA WILL BE HYDROSEEDED.

   (C) HEAVY EQUIPMENT WILL OPERATE EITHER FROM THE TOP OF BANK OR FROM A MID-SLOPE BENCH WELL ABOVE THE WATERLINE. THE EXCAVATOR BUCKET WILL ENTER THE WATER ONLY TO EXCAVATE MATERIAL TO ALLOW PLACEMENT OF ROCK AND FOR PLACEMENT OF ROCK.

   (D) ALL GAS AND OIL CONTAINERS FOR SMALL EQUIPMENT SHALL BE SAFELY AND SECURELY STORED IN UTILITY VEHICLES.

   (E) ALL WORK AREAS SHALL BE FENCED OFF WITH TEMPORARY FENCING PRIOR TO START OF CONSTRUCTION. NO GROUND DISTURBANCE OR OTHER CONSTRUCTION ACTIVITY SHALL TAKE PLACE OUTSIDE OF FENCING.

   (F) NO NATURALLY OCCURRING MATERIAL (LOGS, STUMPS, OR BRANCHES) SHALL BE REMOVED FROM THE RIVER AT ANY TIME. SHIFTING OF MATERIAL AS NEEDED FOR CONSTRUCTION SHALL BE APPROVED BY THE COR.

   (G) SEE SPECIFICATION 01 57 20 WATER QUALITY STANDARDS FOR TURBIDITY SAMPLING REQUIREMENTS.

10. EROSION CONTROL AND VEGETATION

   (A) VEGETATION TO BE PRESERVED AND CLEARING LIMITS WILL BE FLAGGED IN THE FIELD PRIOR TO THE START OF CONSTRUCTION BY THE PROJECT ENGINEER OR THE PROJECT ECOLOGIST.

   (B) EROSION CONTROL HYDROSEED MIX WILL BE USED TO ESTABLISH INITIAL GROUND COVER ON ALL DISTURBED AREAS, USING WASHINGTON STATE DEPARTMENT OF TRANSPORTATION HYDROSEED MIX.

NOT ALL UTILITIES ARE SHOWN ON THE PLANS, CALL 2 WORKING DAYS BEFORE YOU DIG 1-800-424-5555

US Army Corps of Engineers®
SEATTLE DISTRICT

MARK	DESCRIPTION	DATE	APPR.	MARK	DESCRIPTION	DATE	APPR.

U.S. ARMY CORPS OF ENGINEERS
SEATTLE DISTRICT
SEATTLE, WASHINGTON

DESIGNED BY: PEELE
DWN BY: PEELE
CKD BY: KATO
SUBMITTED BY: WIKSTROM
DATE: 27 MAR 2015
PLOT TIME: 3/20/2015 3:04:46 PM
FILE NUMBER: E2-02-206
SIZE: ANSI D
FILE NAME: PN448194_GRDK_C-001

FY15 GREEN RIVER LEVEE REHABILITATION
DYKSTRA LEVEE
AUBURN, WA

LEGEND, ABBREVIATIONS AND GENERAL NOTES

SHEET IDENTIFICATION
C-001
SHEET 2 OF 18

DESIGN FILE: I:\AECDesigns\FY15_PN448194_GRDK\Con_Docs\CAD_Sheets\Civil\PN448194_GRDK_C-001 LEGEND.dgn

DATE AND TIME PLOTTED: 3/20/2015

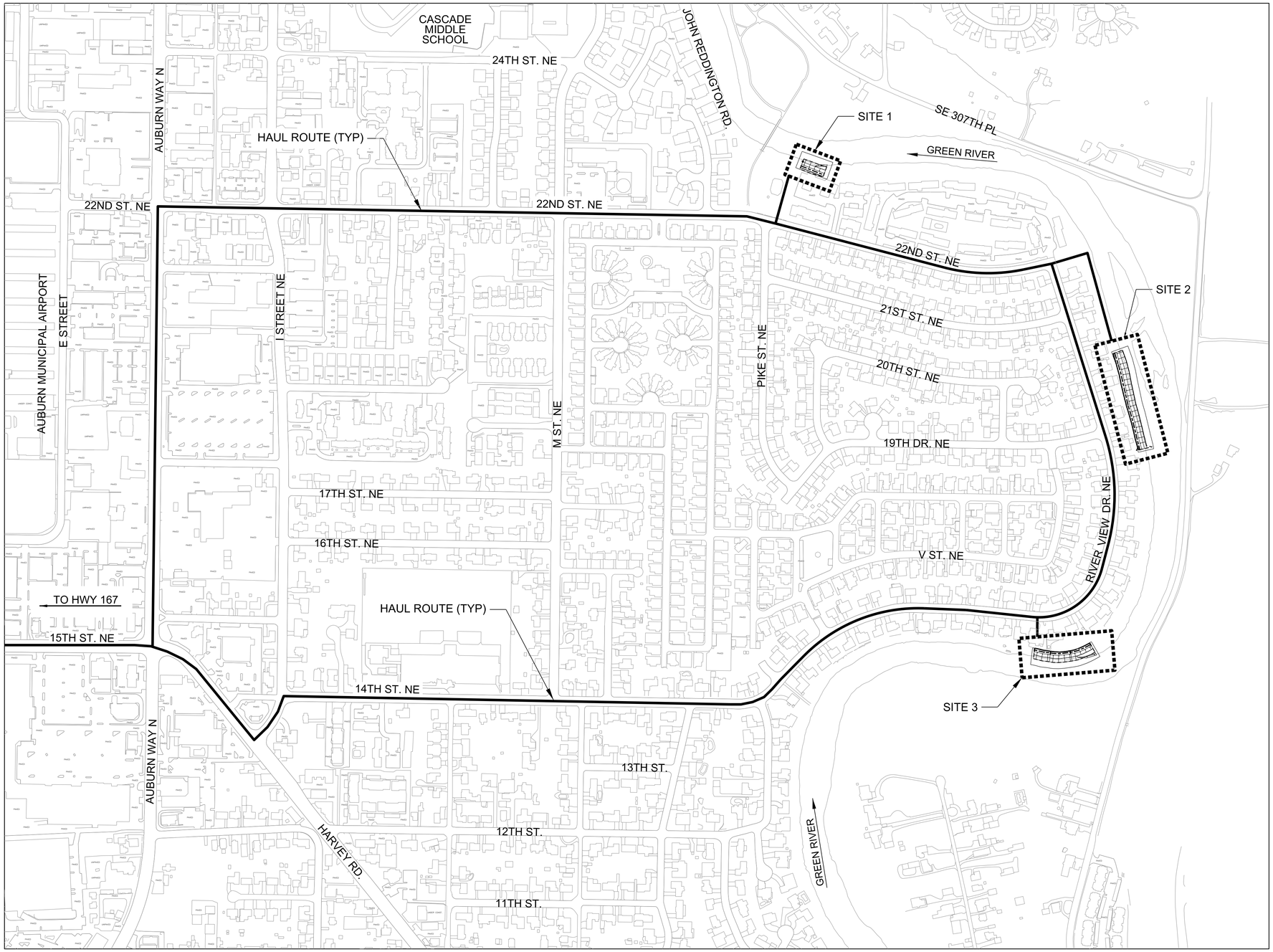

N

1 HAUL ROUTE

SCALE: 1" = 300'

0 300' 600'

NOTES:

1. FOR LEGEND, ABBREVIATIONS, AND GENERAL NOTES, SEE SHEET C-001.

2. MAPPING COMPILED FROM FEBRUARY 2006 AERIAL PHOTOS. MAPPING BY 3DI WEST FOR KING COUNTY DNR AND PARKS. MAP SCALE 1"=100', CONTOUR INTERVAL: 2 FOOT. HORIZONTAL DATUM: NAD83/91 (HARN) WA STATE PLANE NORTH ZONE (FEET). VERTICAL DATUM: NAVD 88. MAP HAS NOT BEEN COMPREHENSIVELY VERIFIED BY FIELD CHECKS.

3. ALL REAL ESTATE REQUIREMENTS AND UTILITY RELOCATIONS NECESSARY FOR PROJECT CONSTRUCTION SHALL BE OBTAINED/PERFORMED BY KING COUNTY FLOOD CONTROL DISTRICT PRIOR TO CONSTRUCTION.

US Army Corps of Engineers®
SEATTLE DISTRICT

MARK	DESCRIPTION	DATE	APPR.	MARK	DESCRIPTION	DATE	APPR.

U.S. ARMY CORPS OF ENGINEERS
SEATTLE DISTRICT
SEATTLE, WASHINGTON

DESIGNED BY: PEELE
DWN BY: PEELE
CKD BY: KATO
SUBMITTED BY: WICKSTROM
DATE: 27 MAR 2015
PLOT DATE: 3/20/2015
PLOT TIME: 3:36:25 PM
FILE NUMBER: E-12-7-236
SIZE: ANSI D
FILE NAME: PN448194_GRDK_C-002

FY15 GREEN RIVER LEVEE REHABILITATION
DYKSTRA LEVEE
AUBURN, WA

HAUL ROUTE

SHEET IDENTIFICATION
C-002
SHEET 3 OF 18

DESIGN FILE: I:\AECDesigns\FY15_PN448194_GRDK\Con_Docs\CAD_Sheets\Civil\PN448194_GRDK_C-002 HAUL ROUTE.dgn

DATE AND TIME PLOTTED: 3/20/2015

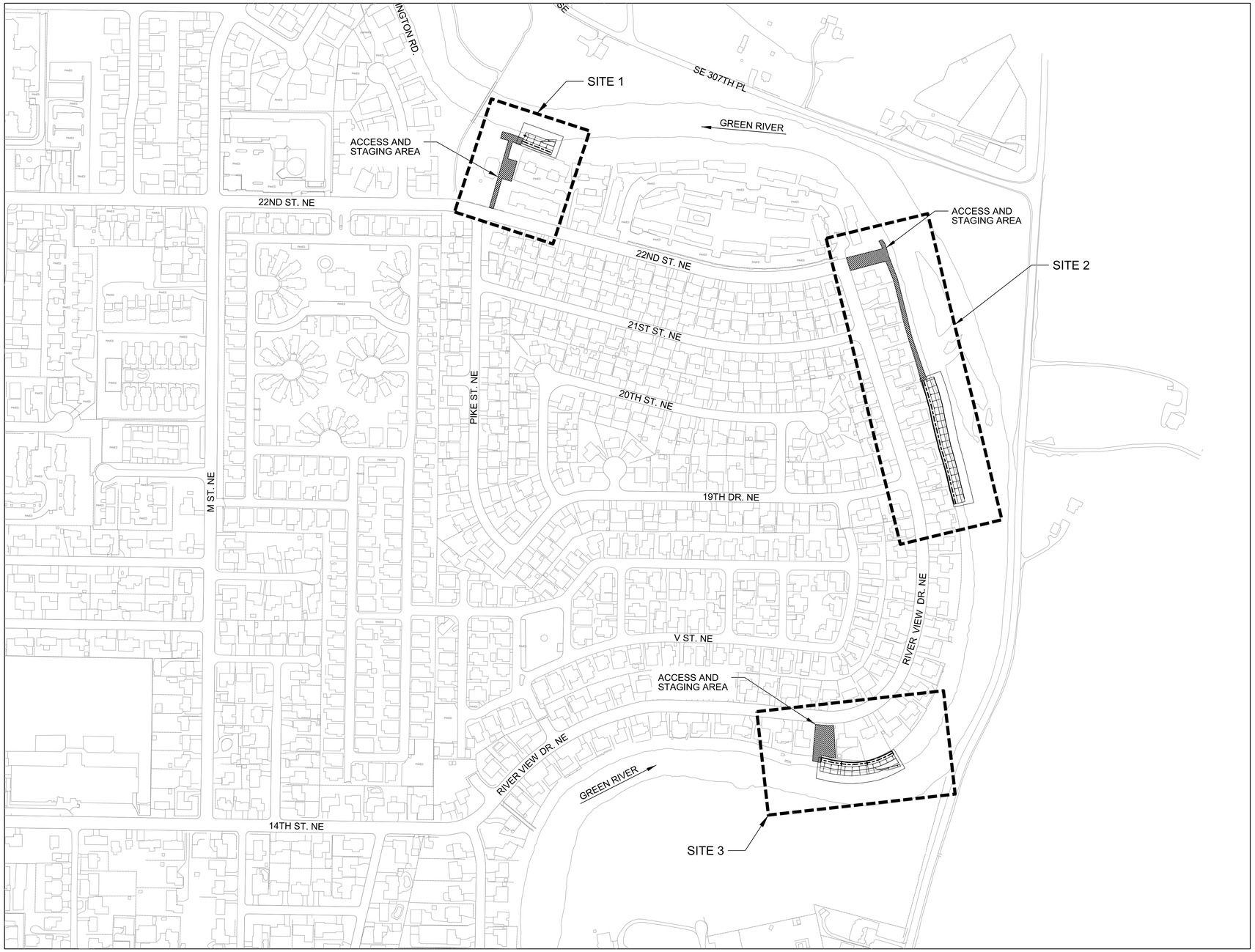

N

1 GENERAL SITE PLAN

SCALE: 1" = 200'

0 200' 400'

NOTES:

1. FOR LEGEND, ABBREVIATIONS, AND GENERAL NOTES, SEE SHEET C-001.

2. MAPPING COMPILED FROM FEBRUARY 2006 AERIAL PHOTOS. MAPPING BY 3Di WEST FOR KING COUNTY DNR AND PARKS. MAP SCALE 1"=100', CONTOUR INTERVAL: 2 FOOT. HORIZONTAL DATUM: NAD83/91 (HARN) WA STATE PLANE NORTH ZONE (FEET). VERTICAL DATUM: NAVD 88. MAP HAS NOT BEEN COMPREHENSIVELY VERIFIED BY FIELD CHECKS.

3. ALL REAL ESTATE REQUIREMENTS AND UTILITY RELOCATIONS NECESSARY FOR PROJECT CONSTRUCTION SHALL BE OBTAINED/PERFORMED BY KING COUNTY FLOOD CONTROL DISTRICT PRIOR TO CONSTRUCTION.

US Army Corps of Engineers®
SEATTLE DISTRICT

MARK	DESCRIPTION	DATE	APPR.	MARK	DESCRIPTION	DATE	APPR.

U.S. ARMY CORPS OF ENGINEERS
SEATTLE DISTRICT
SEATTLE, WASHINGTON

DESIGNED BY: PEELE
DWN BY: PEELE
CKD BY: KATO
SUBMITTED BY: WICKSTROM
PLOT DATE: 3/20/2015
PLOT TIME: 3:36:29 PM
SIZE: ANSI D
FILE NAME: PN448194_GRDK_C-003
DATE: 27 MAR 2015
FILE NUMBER: E-12-7-236

FY15 GREEN RIVER LEVEE REHABILITATION
DYKSTRA LEVEE
AUBURN, WA

GENERAL SITE PLAN

SHEET IDENTIFICATION
C-003
SHEET 4 OF 18

DESIGN FILE: I:\AECDesigns\FY15_PN448194_GRDK\Con_Docs\CAD_Sheets\Civil\PN448194_GRDK_C-003 GENERAL PLAN.dgn

DATE AND TIME PLOTTED: 3/20/2015

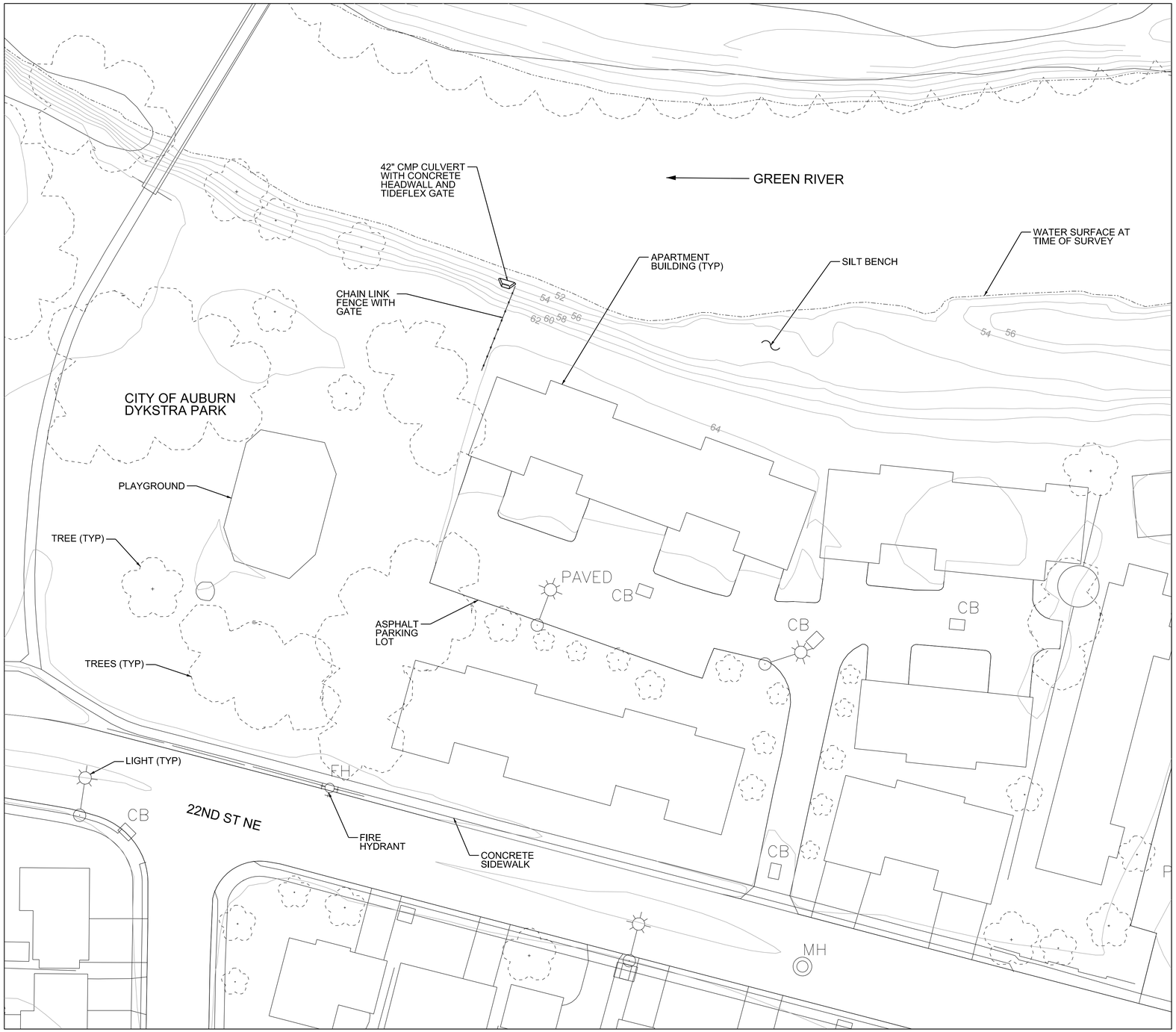

NOTES:

1. FOR LEGEND, ABBREVIATIONS, AND GENERAL NOTES, SEE SHEET C-001.

2. MAPPING COMPILED FROM FEBRUARY 2006 AERIAL PHOTOS. MAPPING BY 3Di WEST FOR KING COUNTY DNR AND PARKS. MAP SCALE 1"=100', CONTOUR INTERVAL: 2 FOOT. HORIZONTAL DATUM: NAD83/91 (HARN) WA STATE PLANE NORTH ZONE (FEET). VERTICAL DATUM: NAVD 88. MAP HAS NOT BEEN COMPREHENSIVELY VERIFIED BY FIELD CHECKS.

3. CONTRACTOR SHALL PROTECT ALL EXISTING UTILITIES, TREES, BUILDINGS, AND PAVEMENT. ALL DAMAGE SHALL BE REPLACED BY CONTRACTOR AT CONTRACTOR'S EXPENSE.

N

1 DYKSTRA LEVEE EXISTING CONDITIONS SITE 1

SCALE: 1" = 30'

0 30' 60'

US Army Corps of Engineers®
SEATTLE DISTRICT

MARK	DESCRIPTION	DATE	APPR.

MARK	DESCRIPTION	DATE	APPR.

U.S. ARMY CORPS OF ENGINEERS
SEATTLE DISTRICT
SEATTLE, WASHINGTON

DESIGNED BY: PEELE
DWN BY: PEELE
CKD BY: KATO
SUBMITTED BY: WICKSTROM
PLOT DATE: 3/20/2015
PLOT TIME: 3:36:33 PM
SIZE: ANSI D
FILE NAME: PN448194_GRDK_C-101
DATE: 27 MAR 2015
FILE NUMBER: E-12-7-236

FY15 GREEN RIVER LEVEE REHABILITATION
DYKSTRA LEVEE
AUBURN, WA

EXISTING CONDITIONS
SITE 1

SHEET IDENTIFICATION
C-101
SHEET 5 OF 18

DESIGN FILE: I:\AECDesigns\FY15_PN448194_GRDK\Con_Docs\CAD_Sheets\Civil\PN448194_GRDK_C-101 EXISTING 1.dgn

DATE AND TIME PLOTTED: 3/20/2015

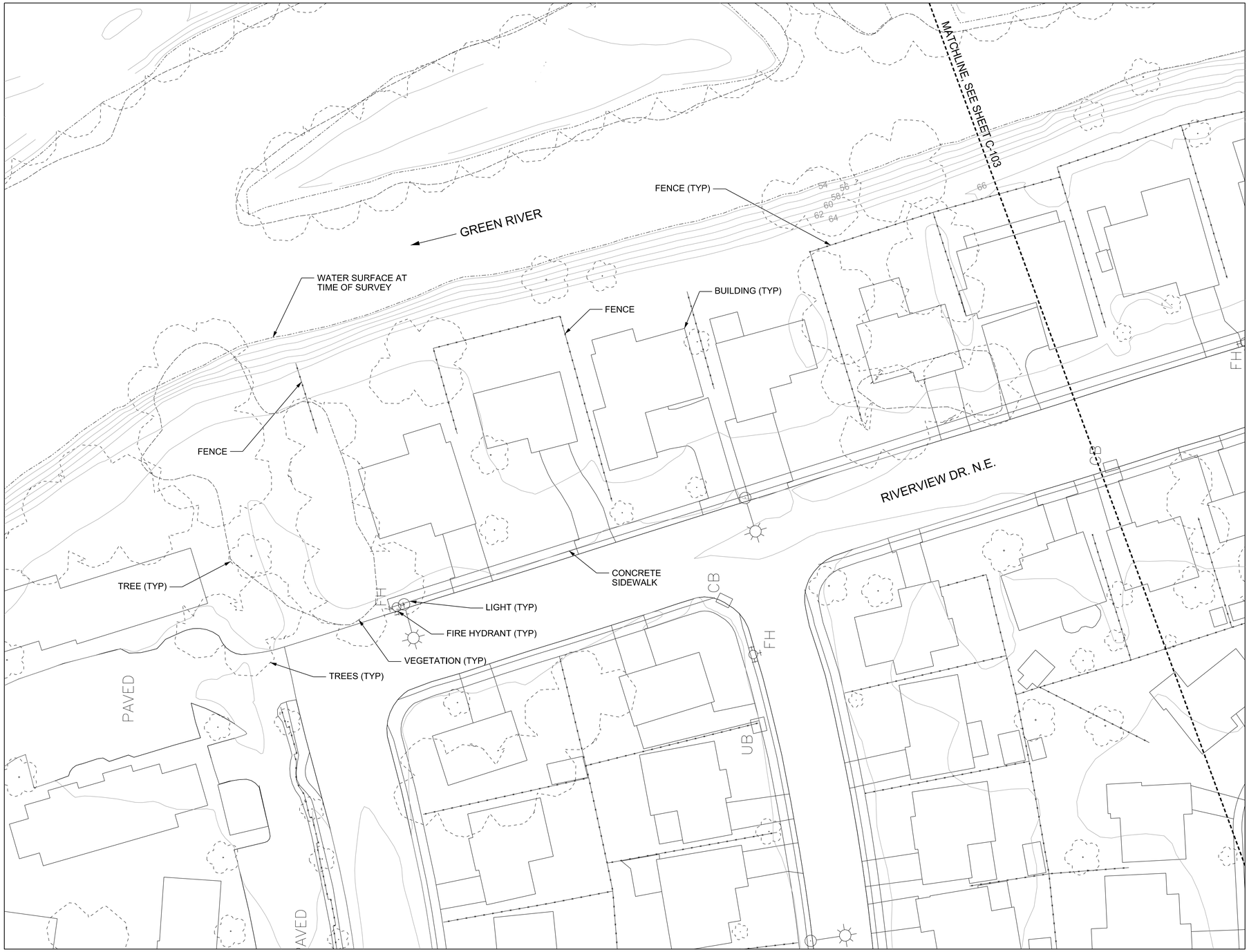

NOTES:

1. FOR LEGEND, ABBREVIATIONS, AND GENERAL NOTES, SEE SHEET C-001.

2. MAPPING COMPILED FROM FEBRUARY 2006 AERIAL PHOTOS. MAPPING BY 3Di WEST FOR KING COUNTY DNR AND PARKS. MAP SCALE 1"=100', CONTOUR INTERVAL: 2 FOOT. HORIZONTAL DATUM: NAD83/91 (HARN) WA STATE PLANE NORTH ZONE (FEET). VERTICAL DATUM: NAVD 88. MAP HAS NOT BEEN COMPREHENSIVELY VERIFIED BY FIELD CHECKS.

3. CONTRACTOR SHALL PROTECT ALL EXISTING UTILITIES, TREES, BUILDINGS, AND PAVEMENT. ALL DAMAGE SHALL BE REPLACED BY CONTRACTOR AT CONTRACTOR'S EXPENSE.

1 DYKSTRA LEVEE EXISTING CONDITIONS SITE 2(A)

SCALE: 1" = 30'

0 30' 60'

US Army Corps of Engineers®
SEATTLE DISTRICT

MARK	DESCRIPTION	DATE	APPR.	MARK	DESCRIPTION	DATE	APPR.

U.S. ARMY CORPS OF ENGINEERS
SEATTLE DISTRICT
SEATTLE, WASHINGTON

DESIGNED BY: PEELE
DWN BY: PEELE
CKD BY: KATO
SUBMITTED BY: WICKSTROM
DATE: 27 MAR 2015
PLOT DATE: 3/20/2015
PLOT TIME: 3:36:35 PM
FILE NUMBER: E-12-7-236
SIZE: ANSI D
FILE NAME: PN448194_GDRK_C-102

FY15 GREEN RIVER LEVEE REHABILITATION
DYKSTRA LEVEE
AUBURN, WA

EXISTING CONDITIONS
SITE 2(A)

SHEET IDENTIFICATION
C-102
SHEET 6 OF 18

DESIGN FILE: I:\AECDesigns\FY15_PN448194_GRDK\Con_Docs\CAD_Sheets\Civil\PN448194_GRDK_C-102 EXISTING 2(A).dgn

DATE AND TIME PLOTTED: 3/20/2015

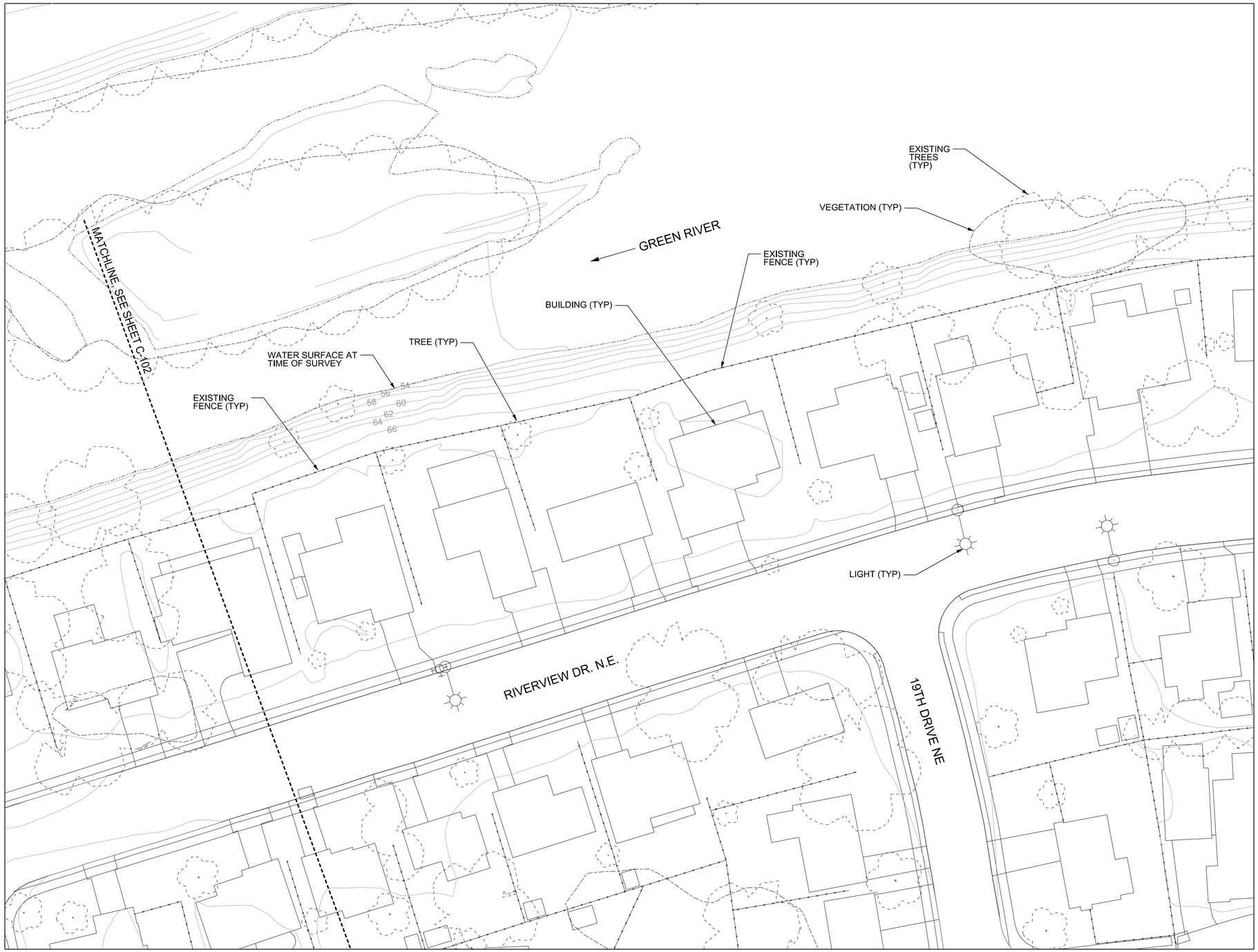

1 DYKSTRA LEVEE EXISTING CONDITIONS SITE 2(B)

SCALE: 1" = 30'

0 30' 60'

NOTES:

1. FOR LEGEND, ABBREVIATIONS, AND GENERAL NOTES, SEE SHEET C-001.

2. MAPPING COMPILED FROM FEBRUARY 2006 AERIAL PHOTOS. MAPPING BY 3Di WEST FOR KING COUNTY DNR AND PARKS. MAP SCALE 1"=100', CONTOUR INTERVAL: 2 FOOT. HORIZONTAL DATUM: NAD83/91 (HARN) WA STATE PLANE NORTH ZONE (FEET). VERTICAL DATUM: NAVD 88. MAP HAS NOT BEEN COMPREHENSIVELY VERIFIED BY FIELD CHECKS.

3. CONTRACTOR SHALL PROTECT ALL EXISTING UTILITIES, TREES, BUILDINGS, AND PAVEMENT. ALL DAMAGE SHALL BE REPLACED BY CONTRACTOR AT CONTRACTOR'S EXPENSE.

US Army Corps of Engineers®
SEATTLE DISTRICT

MARK	DESCRIPTION	DATE	APPR.	MARK	DESCRIPTION	DATE	APPR.

U.S. ARMY CORPS OF ENGINEERS
SEATTLE DISTRICT
SEATTLE, WASHINGTON

DESIGNED BY: PEELE
DWN BY: PEELE
CKD BY: KATO
SUBMITTED BY: WICKSTROM
DATE: 27 MAR 2015
PLOT DATE: 3/20/2015
PLOT TIME: 3:36:36 PM
FILE NUMBER: E-12-7-236
SIZE: ANSI D
FILE NAME: PN448194_GDRK_C-103

FY15 GREEN RIVER LEVEE REHABILITATION
DYKSTRA LEVEE
AUBURN, WA

EXISTING CONDITIONS
SITE 2(B)

SHEET IDENTIFICATION
C-103
SHEET 7 OF 18

DESIGN FILE: I:\AECDesigns\FY15_PN448194_GRDK\Con_Docs\CAD_Sheets\Civil\PN448194_GRDK_C-103 EXISTING 2(B).dgn

DATE AND TIME PLOTTED: 3/20/2015

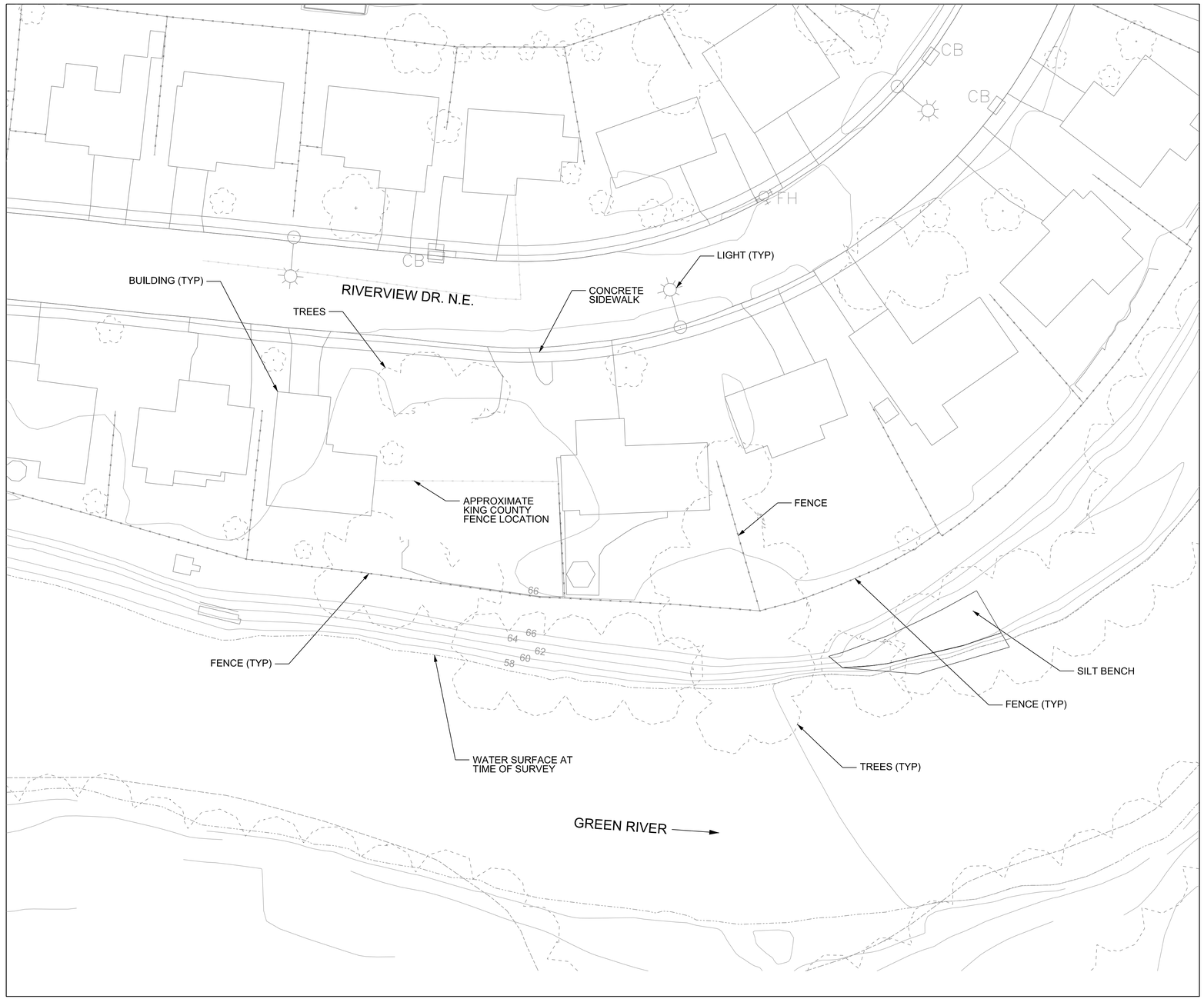

N

1 DYKSTRA LEVEE EXISTING CONDITIONS SITE 3

SCALE: 1" = 30'

0 30' 60'

NOTES:

1. FOR LEGEND, ABBREVIATIONS, AND GENERAL NOTES, SEE SHEET C-001.

2. MAPPING COMPILED FROM FEBRUARY 2006 AERIAL PHOTOS. MAPPING BY 3Di WEST FOR KING COUNTY DNR AND PARKS. MAP SCALE 1"=100', CONTOUR INTERVAL: 2 FOOT. HORIZONTAL DATUM: NAD83/91 (HARN) WA STATE PLANE NORTH ZONE (FEET). VERTICAL DATUM: NAVD 88. MAP HAS NOT BEEN COMPREHENSIVELY VERIFIED BY FIELD CHECKS.

3. CONTRACTOR SHALL PROTECT ALL EXISTING UTILITIES, TREES, BUILDINGS, AND PAVEMENT. ALL DAMAGE SHALL BE REPLACED BY CONTRACTOR AT CONTRACTOR'S EXPENSE.

US Army Corps of Engineers®
SEATTLE DISTRICT

MARK	DESCRIPTION	DATE	APPR.

MARK	DESCRIPTION	DATE	APPR.

U.S. ARMY CORPS OF ENGINEERS
SEATTLE DISTRICT
SEATTLE, WASHINGTON

DESIGNED BY: PEELE
DWN BY: PEELE
CKD BY: KATO
SUBMITTED BY: WICKSTROM
PLOT DATE: 3/20/2015
PLOT TIME: 3:36:38 PM
SIZE: ANSI D
FILE NAME: PN448194_GDRK_C-104
DATE: 27 MAR 2015
FILE NUMBER: E-12-7-236

FY15 GREEN RIVER LEVEE REHABILITATION
DYKSTRA LEVEE
AUBURN, WA

EXISTING CONDITIONS
SITE 3

SHEET IDENTIFICATION
C-104
SHEET 8 OF 18

DESIGN FILE: I:\AECDesigns\FY15_PN448194_GRDK\Con_Docs\CAD_Sheets\Civil\PN448194_GRDK_C-104 EXISTING 3.dgn

DATE AND TIME PLOTTED: 3/20/2015

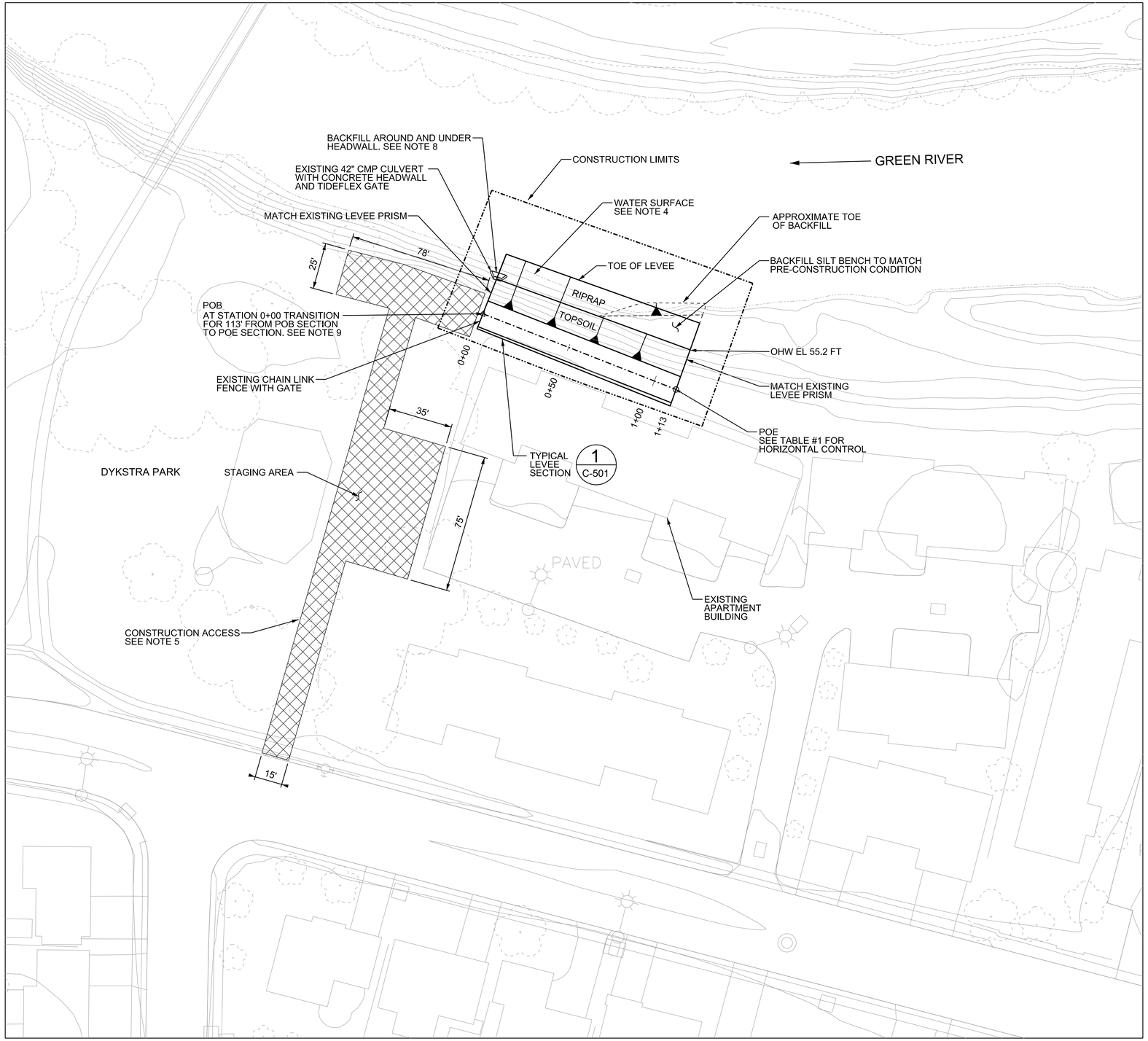

N

1 DYKSTRA LEVEE SITE PLAN SITE 1

SCALE: 1" = 30'

0 30' 60'

NOTES:

1. FOR LEGEND, ABBREVIATIONS, AND GENERAL NOTES, SEE SHEET C-001.

2. LEVEE TOP ELEVATION AT THE UPSTREAM AND DOWNSTREAM ENDS OF THE PROJECT SHALL MATCH THE EXISTING GRADE ELEVATIONS. A CONTINUOUS SLOPE BETWEEN THE UPSTREAM AND DOWNSTREAM END ELEVATIONS SHALL BE CONSTRUCTED FOR THE FINAL GRADE OF THE LEVEE BASED ON THE CENTERLINE OF THE LEVEE.

3. MAPPING COMPILED FROM FEBRUARY 2006 AERIAL PHOTOS. MAPPING BY 3Di WEST FOR KING COUNTY DNR AND PARKS. MAP SCALE 1"=100', CONTOUR INTERVAL: 2 FOOT. HORIZONTAL DATUM: NAD83/91 (HARN) WA STATE PLANE NORTH ZONE (FEET). VERTICAL DATUM: NAVD 88. MAP HAS NOT BEEN COMPREHENSIVELY VERIFIED BY FIELD CHECKS.

4. TOPOGRAPHY AND CONTOURS NOT SHOWN BELOW WATER SURFACE. DUE TO SURVEY DATA BEING TAKEN FROM LIDAR DATA NO TOPOGRAPHY INFORMATION IS AVAILABLE BELOW THE WATER SURFACE.

5. RESTORE TEMPORARY WORK AREAS TO PRE-CONSTRUCTION CONDITION. REPLACE ANY DAMAGED CURBS, PAINT STRIPES, ETC. IN KIND. RESTORATION SHALL BE COMPLETE PRIOR TO END OF CONSTRUCTION.

6. SHIFT CONSTRUCTION ACCESS TO AVOID DAMAGING OR REMOVING TREES. COORDINATE SHIFTING OF THE CONSTRUCTION ACCESS AND STAGING AREA TO AVOID TREES WITH THE COR. ANY TREES REMOVED SHALL BE REPLACED IN KIND. ANY PRUNING SHALL BE DONE IN A MANNER THAT DOES NOT JEOPARDIZE THE TREE HEALTH OR NATURAL GROWING FORM.

7. RESTORE ACCESS ROAD CONDITIONS AND FEATURES (FENCING, GATES, ETC...) TO PRE-CONSTRUCTION CONDITIONS.

8. BACK FILL UNDER HEADWALL WITH 2"-4" QUARRY SPALLS. FINAL GRADES AROUND HEADWALL TO BE FLUSH WITH EDGES OF HEADWALL. CARE SHOULD BE USED TO AVOID DAMAGING THE HEADWALL AND CULVERT.

9. SEE SHEET C-301 FOR SECTIONS AT POB AND POE.

TABLE 1 - HORIZONTAL CONTROL TABLE

POINT/ TYPE	STATION/ DISTANCE	DIRECTION	NORTHING	EASTING
POB	0+00.00 112.64	S 68°34'35.4" E	122,367.291	1,299,106.024
POE	1+12.64		122,367.291	1,299,106.024

US Army Corps of Engineers®
SEATTLE DISTRICT

MARK	DESCRIPTION	DATE	APPR.

MARK	DESCRIPTION	DATE	APPR.

U.S. ARMY CORPS OF ENGINEERS
SEATTLE DISTRICT
SEATTLE, WASHINGTON

DESIGNED BY: PEELE
DWN BY: PEELE
CKD BY: KATO
SUBMITTED BY: WICKSTROM
DATE: 27 MAR 2015
PLOT DATE: 3/20/2015
PLOT TIME: 3:36:40 PM
FILE NUMBER: E-12-7-236
SIZE: ANSI D
FILE NAME: PN448194_GRDK_C-105

FY15 GREEN RIVER LEVEE REHABILITATION
DYKSTRA LEVEE
AUBURN, WA

SITE PLAN
SITE 1

SHEET IDENTIFICATION
C-105
SHEET 9 OF 18

DESIGN FILE: I:\AECDesigns\FY15_PN448194_GRDK\Con_Docs\CAD_Sheets\Civil\PN448194_GRDK_C-105 SITE 1.dgn

DATE AND TIME PLOTTED: 3/20/2015

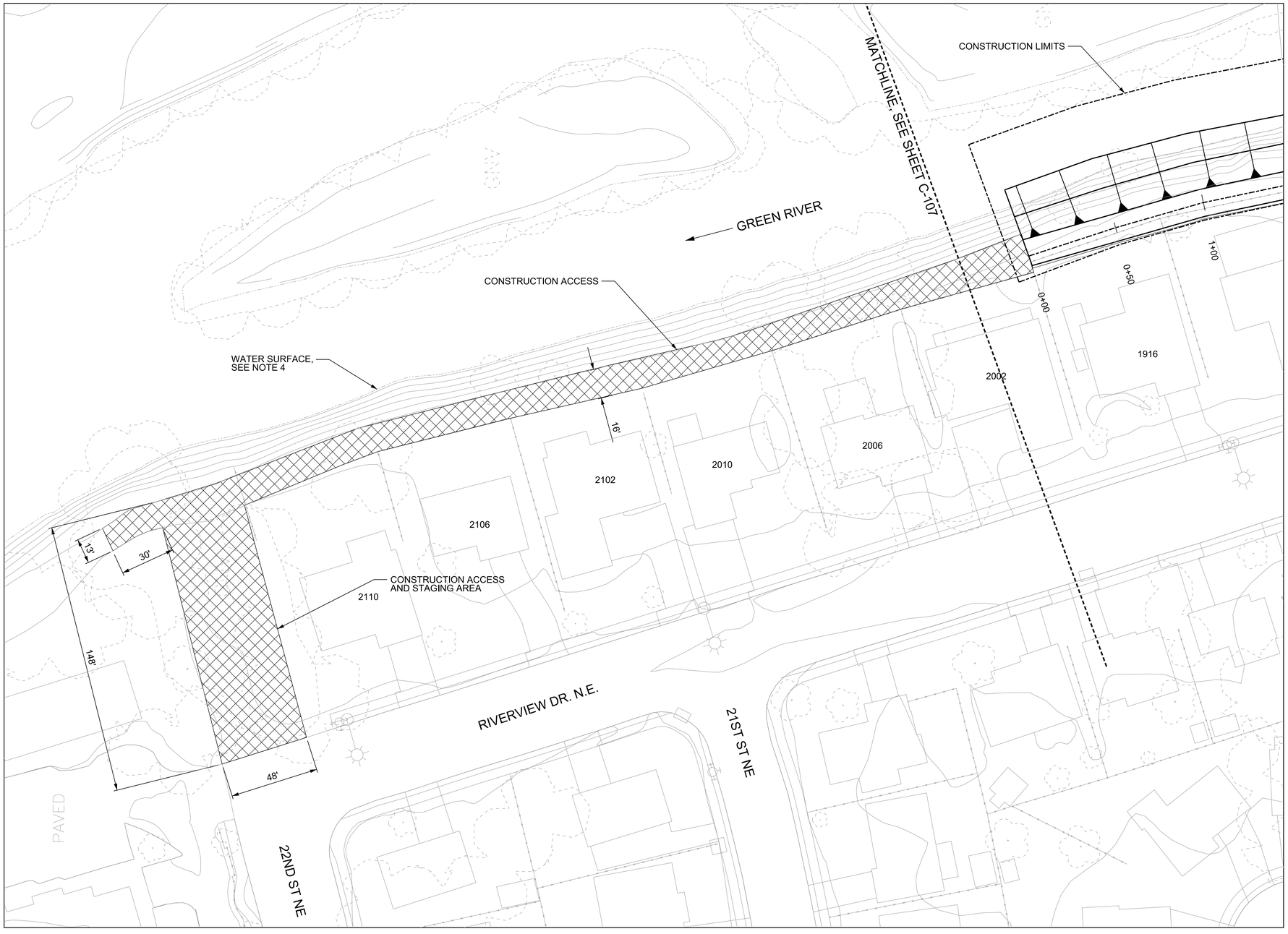

NOTES:

1. FOR LEGEND, ABBREVIATIONS, AND GENERAL NOTES, SEE SHEET C-001.

2. FOR LEVEE HORIZONTAL CONTROL, SEE SHEET C-106.

3. MAPPING COMPILED FROM FEBRUARY 2006 AERIAL PHOTOS. MAPPING BY 3Di WEST FOR KING COUNTYDNR AND PARKS. MAP SCALE 1"=100', CONTOUR INTERVAL: 2 FOOT. HORIZONTAL DATUM: NAD83/91 (HARN) WA STATE PLANE NORTH ZONE (FEET). VERTICAL DATUM: NAVD 88. MAP HAS NOT BEEN COMPREHENSIVELY VERIFIED BY FIELD CHECKS.

4. LEVEE TOP ELEVATION AT THE UPSTREAM AND DOWNSTREAM ENDS OF THE PROJECT SHALL MATCH THE EXISTING GRADE ELEVATIONS. A CONTINUOUS SLOPE BETWEEN THE UPSTREAM AND DOWNSTREAM END ELEVATIONS SHALL BE CONSTRUCTED FOR THE FINAL GRADE OF THE LEVEE BASED ON THE CENTERLINE OF THE LEVEE.

5. TOPOGRAPHY AND CONTOURS NOT SHOWN BELOW WATER SURFACE. DUE TO SURVEY DATA BEING TAKEN FROM LIDAR DATA NO TOPOGRAPHY INFORMATION IS AVAILABLE BELOW THE WATER SURFACE.

6. RESTORE TEMPORARY WORK AREAS TO PRE-CONSTRUCTION CONDITION. REPLACE ANY DAMAGED CURBS, PAINT STRIPES, ETC. IN KIND. RESTORATION SHALL BE COMPLETE PRIOR TO END OF CONSTRUCTION.

7. SHIFT CONSTRUCTION ACCESS TO AVOID DAMAGING OR REMOVING TREES. COORDINATE SHIFTING OF THE CONSTRUCTION ACCESS AND STAGING AREA TO AVOID TREES WITH THE COR. ANY TREES REMOVED SHALL BE REPLACED IN KIND. ANY PRUNING SHALL BE DONE IN A MANNER THAT DOES NOT JEOPARDIZE THE TREE HEALTH OR NATURAL GROWING FORM.

8. SEE SHEET C-302 FOR SECTIONS AT POB AND POE.

N

1 DYKSTRA LEVEE SITE PLAN SITE 2(A)

SCALE: 1" = 30'

0 30' 60'

US Army Corps of Engineers®
SEATTLE DISTRICT

MARK	DESCRIPTION	DATE	APPR.

MARK	DESCRIPTION	DATE	APPR.

U.S. ARMY CORPS OF ENGINEERS
SEATTLE DISTRICT
SEATTLE, WASHINGTON

DESIGNED BY: PEELE
DWN BY: PEELE
CKD BY: KATO
SUBMITTED BY: WICKSTROM
DATE: 27 MAR 2015
PLOT DATE: 3/20/2015
PLOT TIME: 3:36:42 PM
FILE NUMBER: E-12-7-236
SIZE: ANSI D
FILE NAME: PN448194_GRDK_C-106

FY15 GREEN RIVER LEVEE REHABILITATION
DYKSTRA LEVEE
AUBURN, WA

SITE PLAN
SITE 2(A)

SHEET IDENTIFICATION
C-106
SHEET 10 OF 18

DESIGN FILE: I:\AECDesigns\FY15_PN448194_GRDK\Con_Docs\CAD_Sheets\Civil\PN448194_GRDK_C-106 SITE 2(A).dgn

DATE AND TIME PLOTTED: 3/20/2015

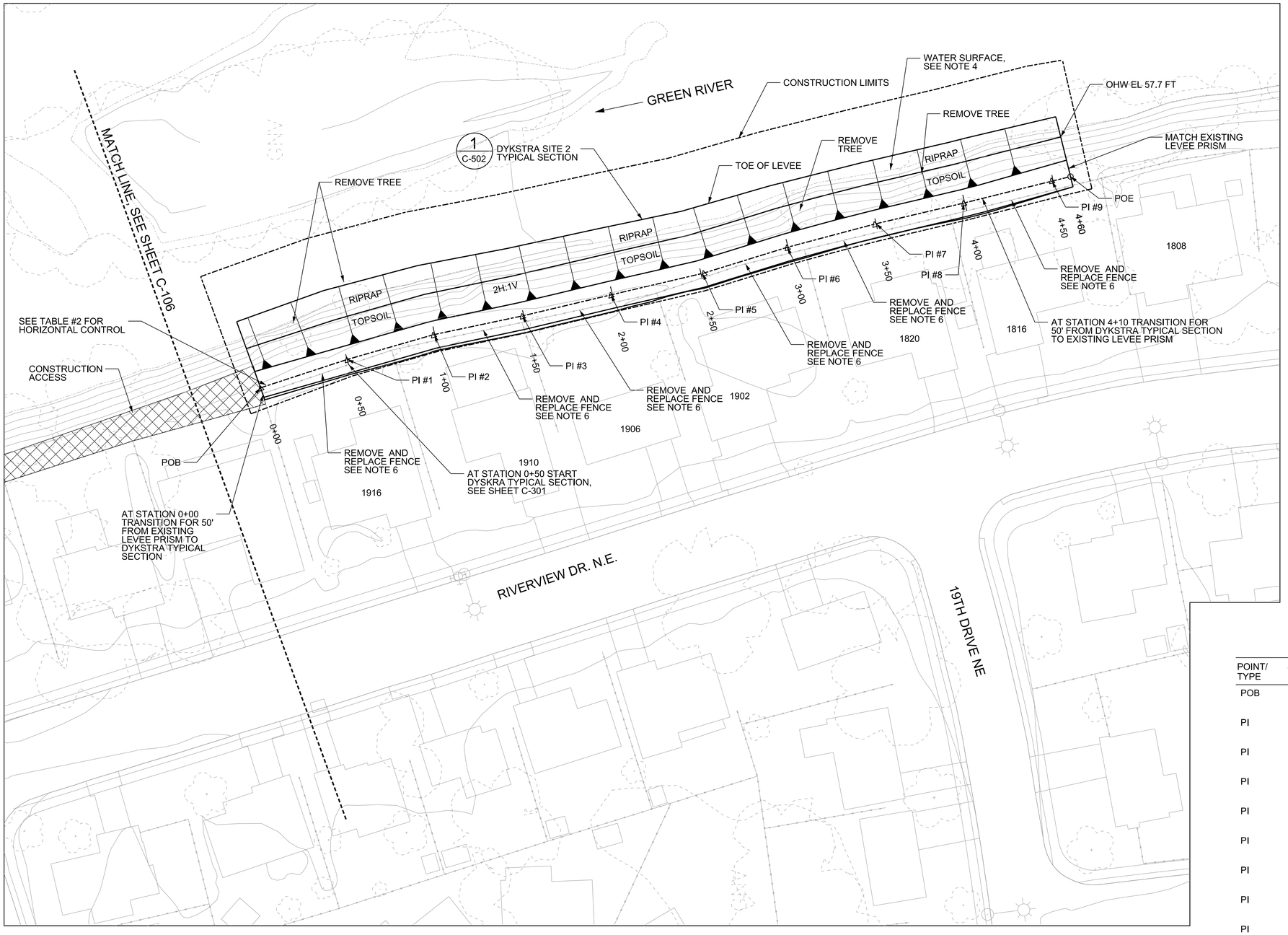

NOTES:

1. FOR LEGEND, ABBREVIATIONS, AND GENERAL NOTES, SEE SHEET C-001.

2. MAPPING COMPILED FROM FEBRUARY 2006 AERIAL PHOTOS. MAPPING BY 3Di WEST FOR KING COUNTYDNR AND PARKS. MAP SCALE 1"=100', CONTOUR INTERVAL: 2 FOOT. HORIZONTAL DATUM: NAD83/91 (HARN) WA STATE PLANE NORTH ZONE (FEET). VERTICAL DATUM: NAVD 88. MAP HAS NOT BEEN COMPREHENSIVELY VERIFIED BY FIELD CHECKS.

3. LEVEE TOP ELEVATION AT THE UPSTREAM AND DOWNSTREAM ENDS OF THE PROJECT SHALL MATCH THE EXISTING GRADE ELEVATIONS. A CONTINUOUS SLOPE BETWEEN THE UPSTREAM AND DOWNSTREAM END ELEVATIONS SHALL BE CONSTRUCTED FOR THE FINAL GRADE OF THE LEVEE BASED ON THE CENTERLINE OF THE LEVEE.

4. TOPOGRAPHY AND CONTOURS NOT SHOWN BELOW WATER SURFACE. DUE TO SURVEY DATA BEING TAKEN FROM LIDAR DATA NO TOPOGRAPHY INFORMATION IS AVAILABLE BELOW THE WATER SURFACE.

5. RESTORE TEMPORARY WORK AREAS TO PRE-CONSTRUCTION CONDITION. REPLACE ANY DAMAGED CURBS, PAINT STRIPES, ETC. IN KIND. RESTORATION SHALL BE COMPLETE PRIOR TO END OF CONSTRUCTION.

6. FENCES TO BE REMOVED AND REPLACED IN KIND. NEW FENCE SHALL BE LOCATED AT THE LANDWARD TOE OF THE LEVEE.

7. RESTORE TEMPORARY WORK AREAS TO PRE-CONSTRUCTION CONDITION. REPLACE ANY DAMAGED CURBS, PAINT STRIPES, ETC. IN KIND. RESTORATION SHALL BE COMPLETE PRIOR TO END OF CONSTRUCTION.

8. SHIFT CONSTRUCTION ACCESS TO AVOID DAMAGING OR REMOVING TREES. COORDINATE SHIFTING OF THE CONSTRUCTION ACCESS AND STAGING AREA TO AVOID TREES WITH THE COR. ANY TREES REMOVED SHALL BE REPLACED IN KIND. ANY PRUNING SHALL BE DONE IN A MANNER THAT DOES NOT JEOPARDIZE THE TREE HEALTH OR NATURAL GROWING FORM.

9. SEE SHEET C-302 FOR SECTIONS AT POB AND POE.

TABLE #2 - HORIZONTAL CONTROL TABLE

POINT/ TYPE	STATION/ DISTANCE	DIRECTION	NORTHING	EASTING
POB	0+00.00		121,506.160	1,300,549.550
	49.98	S 18°05'51" E		
PI	0+49.98		121,458.650	1,300,565.080
	49.27	S 16°00'07" E		
PI	0+99.25		121,411.290	1,300,578.660
	49.94	S 11°56'13" E		
PI	1+49.19		121,362.430	1,300,588.990
	49.95	S 13°23'41" E		
PI	1+99.14		121,313.840	1,300,600.560
	52.41	S 13°10'50" E		
PI	2+51.55		121,262.810	1,300,612.510
	47.89	S 17°10'30" E		
PI	2+99.44		121,217.060	1,300,626.650
	49.81	S 14°50'30" E		
PI	3+49.25		121,168.910	1,300,639.410
	50.12	S 13°17'14" E		
PI	3+99.37		121,120.130	1,300,650.930
	49.86	S 14°21'44" E		
PI	4+49.23		121,071.820	1,300,663.300
	10.59	S 11°51'16" E		
POE	4+59.82		121,071.820	1,300,663.300

N

1 DYKSTRA LEVEE SITE PLAN SITE 2(B)

SCALE: 1" = 30'

0 30' 60'

US Army Corps of Engineers®
SEATTLE DISTRICT

MARK	DESCRIPTION	DATE	APPR.	MARK	DESCRIPTION	DATE	APPR.

U.S. ARMY CORPS OF ENGINEERS
SEATTLE DISTRICT
SEATTLE, WASHINGTON

DESIGNED BY: PEELE | DATE: 27 MAR 2015
DWN BY: PEELE | CKD BY: KATO
SUBMITTED BY: WIKSTROM
PLOT DATE: 3/20/2015 | PLOT TIME: 09:44 PM
SIZE: ANSI D | FILE NUMBER: E2-E2-206
FILE NAME: PN448194_GRDK_C-107

FY15 GREEN RIVER LEVEE REHABILITATION
DYKSTRA LEVEE
AUBURN, WA

SITE PLAN
SITE 2(B)

SHEET IDENTIFICATION
C-107
SHEET 11 OF 18

DESIGN FILE: I:\AECDesigns\FY15_PN448194_GRDK\Con_Docs\CAD_Sheets\Civil\PN448194_GRDK_C-107 SITE 2(B).dgn

DATE AND TIME PLOTTED: 3/20/2015

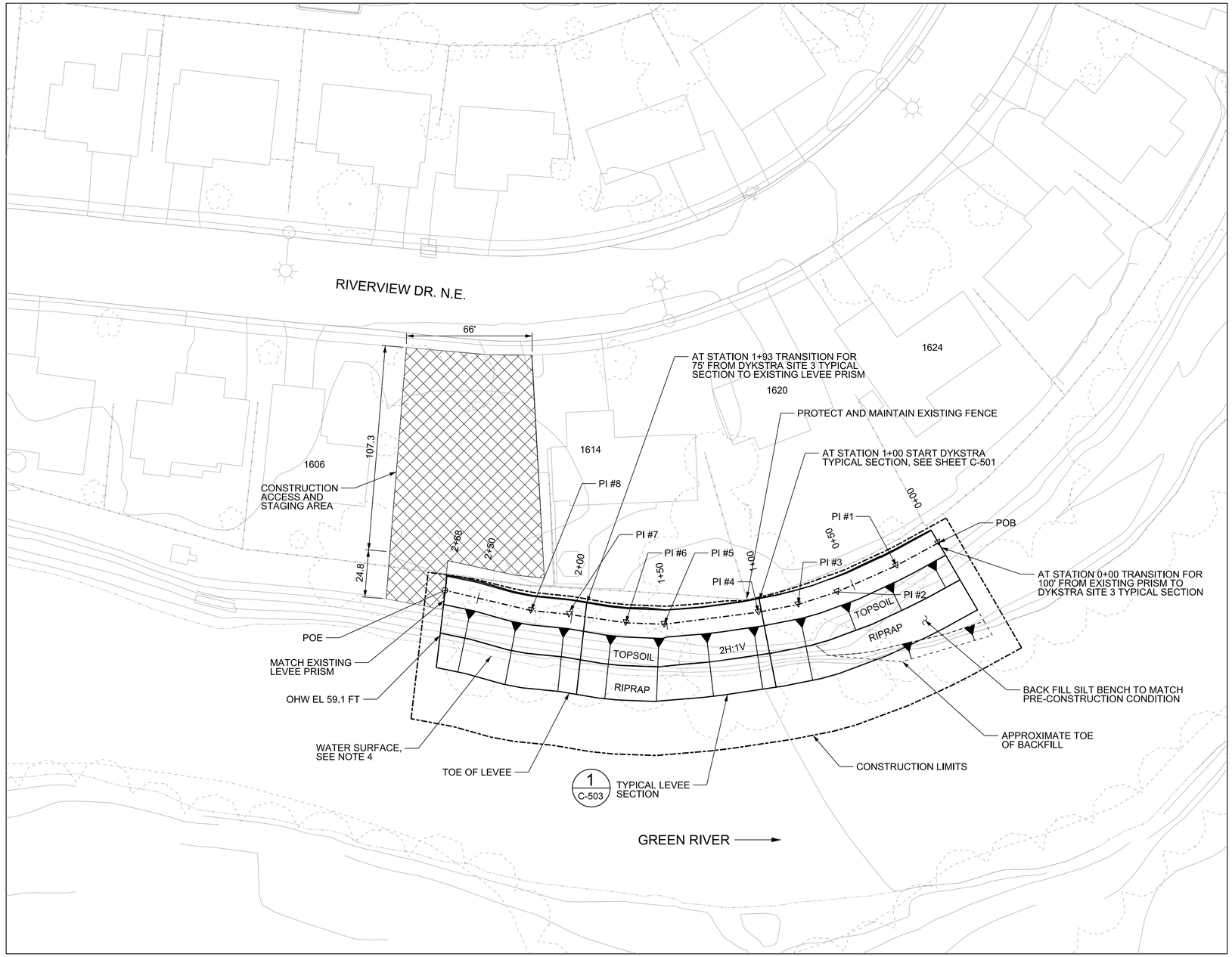

N

1 DYKSTRA LEVEE SITE PLAN SITE 3

SCALE: 1" = 30'

0 30' 60'

NOTES:

1. FOR LEGEND, ABBREVIATIONS, AND GENERAL NOTES, SEE SHEET C-001.

2. LEVEE TOP ELEVATION AT THE UPSTREAM AND DOWNSTREAM ENDS OF THE PROJECT SHALL MATCH THE EXISTING GRADE ELEVATIONS. A CONTINUOUS SLOPE BETWEEN THE UPSTREAM AND DOWNSTREAM END ELEVATIONS SHALL BE CONSTRUCTED FOR THE FINAL GRADE OF THE LEVEE BASED ON THE CENTERLINE OF THE LEVEE.

3. MAPPING COMPILED FROM FEBRUARY 2006 AERIAL PHOTOS. MAPPING BY 3Di WEST FOR KING COUNTYDNR AND PARKS. MAP SCALE 1"=100', CONTOUR INTERVAL: 2 FOOT. HORIZONTAL DATUM: NAD83/91 (HARN) WA STATE PLANE NORTH ZONE (FEET). VERTICAL DATUM: NAVD 88. MAP HAS NOT BEEN COMPREHENSIVELY VERIFIED BY FIELD CHECKS.

4. TOPOGRAPHY AND CONTOURS NOT SHOWN BELOW WATER SURFACE. DUE TO SURVEY DATA BEING TAKEN FROM LIDAR DATA NO TOPOGRAPHY INFORMATION IS AVAILABLE BELOW THE WATER SURFACE.

5. RESTORE TEMPORARY WORK AREAS TO PRE-CONSTRUCTION CONDITION. REPLACE ANY DAMAGED CURBS, PAINT STRIPES, ETC. IN KIND. RESTORATION SHALL BE COMPLETE PRIOR TO END OF CONSTRUCTION.

6. SHIFT CONSTRUCTION ACCESS TO AVOID DAMAGING OR REMOVING TREES. COORDINATE SHIFTING OF THE CONSTRUCTION ACCESS AND STAGING AREA TO AVOID TREES WITH THE COR. ANY TREES REMOVED SHALL BE REPLACED IN KIND.

7. SEE SHEET C-303 FOR SECTIONS AT POB AND POE.

TABLE #3 - HORIZONTAL CONTROL TABLE

POINT/ TYPE	STATION/ DISTANCE	DIRECTION	NORTHING	EASTING
POB	0+00.00 25.01	S 61°33'37" W	120,164.740	1,300,438.810
PI	0+25.01 33.93	S 66°07'04" W	120,152.830	1,300,416.810
PI	0+58.94 21.54	S 72°06'21" W	120,139.090	1,300,385.790
PI	0+80.48 21.16	S 79°00'18" W	120,132.470	1,300,365.290
PI	1+01.64 49.81	S 82°41'44" W	120,128.440	1,300,344.520
PI	1+51.46 20.06	N 87°43'51" W	120,122.100	1,300,295.110
PI	1+71.52 30.01	N 81°33'05" W	120,122.900	1,300,275.060
PI	2+01.54 19.98	N 84°16'09" W	120,127.310	1,300,245.370
PI	2+21.51 46.35	N 76°44'24" W	120,129.300	1,300,225.490
POE	2+67.86		120,129.300	1,300,225.490

US Army Corps of Engineers®
SEATTLE DISTRICT

MARK	DESCRIPTION	DATE	APPR.	MARK	DESCRIPTION	DATE	APPR.

U.S. ARMY CORPS OF ENGINEERS
SEATTLE DISTRICT
SEATTLE, WASHINGTON

DESIGNED BY: PEELE
DWN BY: PEELE
CKD BY: KATO
SUBMITTED BY: WICKSTROM
DATE: 27 MAR 2015
PLOT DATE: 3/20/2015
PLOT TIME: 3:36:46 PM
FILE NUMBER: E12-C-0209
SIZE: ANSI D
FILE NAME: PN448194_GRDK_C-108

FY15 GREEN RIVER LEVEE REHABILITATION
DYKSTRA LEVEE
AUBURN, WA

SITE PLAN
SITE 3

SHEET IDENTIFICATION
C-108
SHEET 12 OF 18

DESIGN FILE: I:\AEDesigns\FY15_PN448194_GRDK\Con_Docs\CAD_Sheets\Civil\PN448194_GRDK_C-108 SITE 3.dgn

DATE AND TIME PLOTTED: 3/20/2015

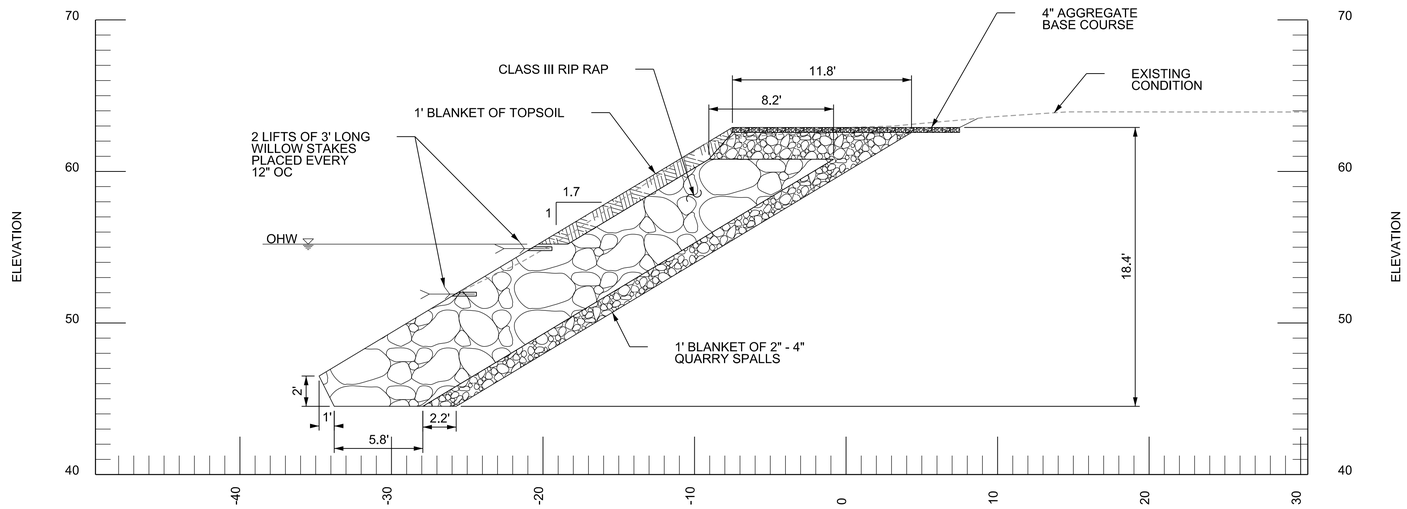

1 SITE 1 CROSS SECTION AT POB

SCALE: 1" = 5'

0 5 10

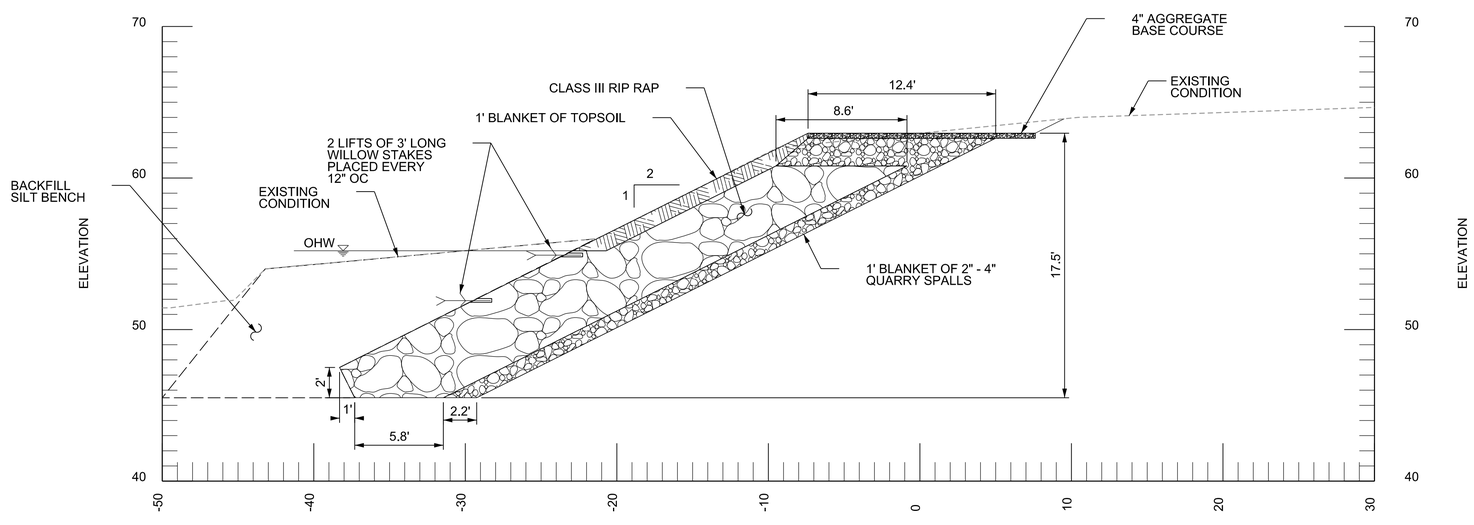

2 SITE 1 CROSS SECTION AT POE

SCALE: 1" = 5'

0 5 10

US Army Corps of Engineers®
SEATTLE DISTRICT

MARK	DESCRIPTION	DATE	APPR.

MARK	DESCRIPTION	DATE	APPR.

U.S. ARMY CORPS OF ENGINEERS
SEATTLE DISTRICT
SEATTLE, WASHINGTON

DESIGNED BY: PEELE
DWN BY: PEELE
CKD BY:
SUBMITTED BY: WICKSTROM
PLOT DATE: 3/20/2015
PLOT TIME: 3:36:47 PM
SIZE: ANSI D
FILE NAME: PN448194_GRDK_C-301
DATE: 27 MAR 2015
FILE NUMBER: E-12-7-236

FY15 GREEN RIVER LEVEE REHABILITATION
DYKSTRA LEVEE
AUBURN, WA

CROSS SECTIONS 1

SHEET IDENTIFICATION
C-301
SHEET 13 OF 18

DESIGN FILE: I:\AECDesigns\FY15_PN448194_GRDK\Con_Docs\CAD_Sheets\Civil\PN448194_GRDK_C-301 SITE 1 SECTIONS.dgn

DATE AND TIME PLOTTED: 3/20/2015

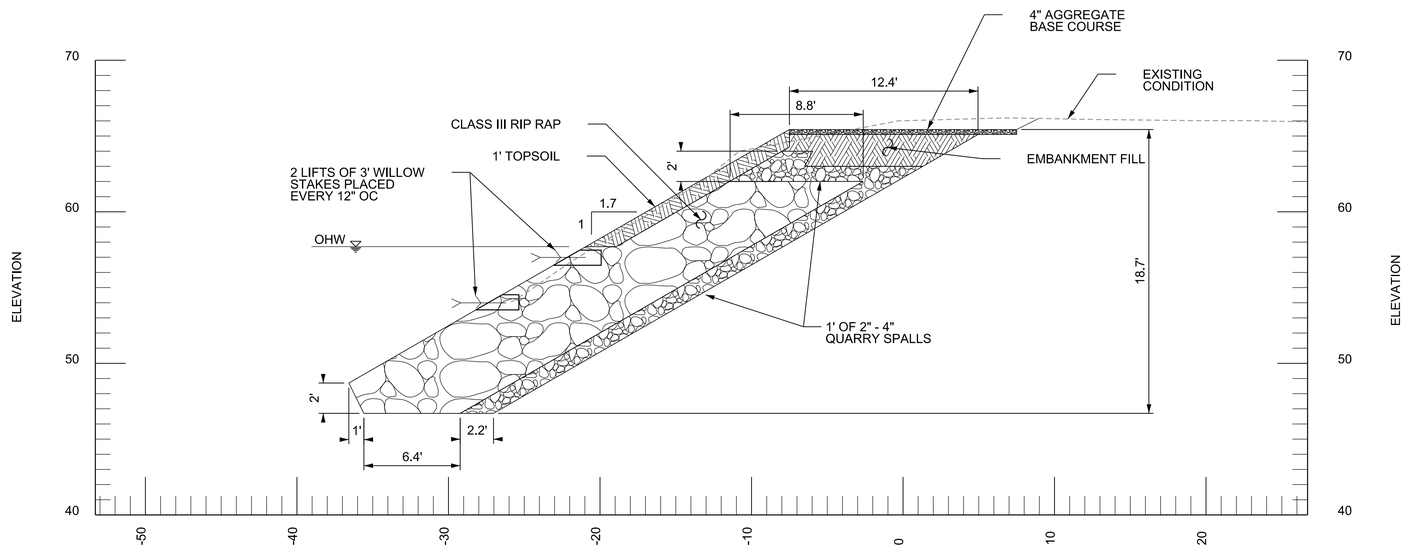

1 SITE 2 CROSS SECTION AT POB

SCALE: 1" = 5'

0 5 10

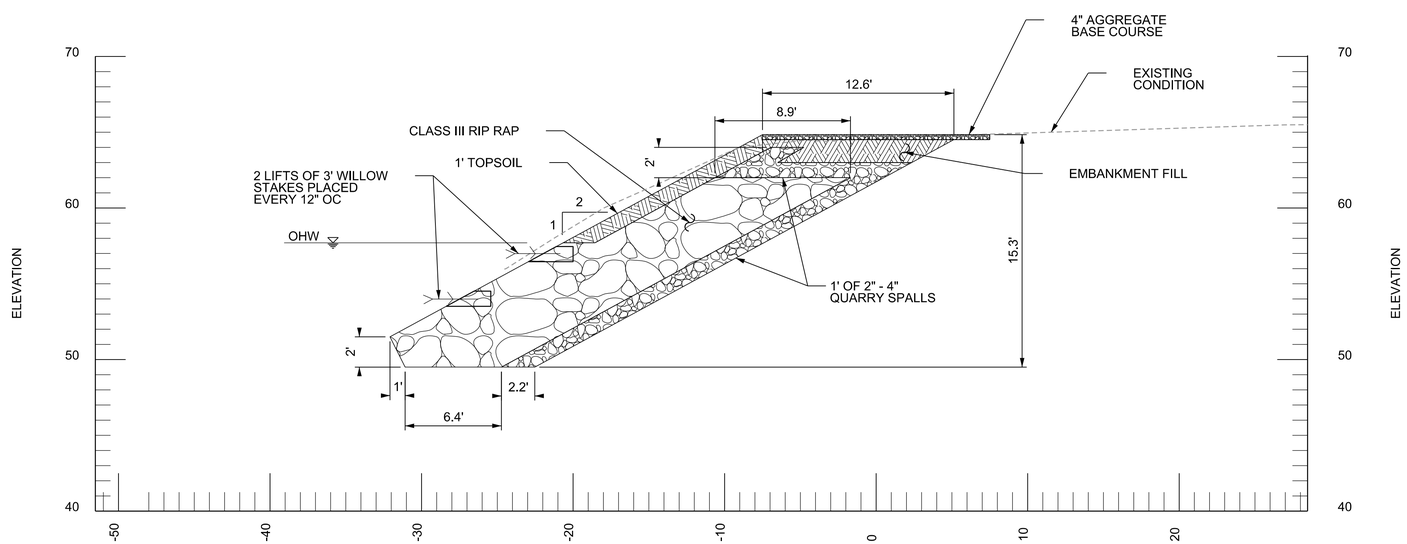

2 SITE 2 CROSS SECTION AT POE

SCALE: 1" = 5'

0 5 10

US Army Corps of Engineers®
SEATTLE DISTRICT

MARK	DESCRIPTION	DATE	APPR.

MARK	DESCRIPTION	DATE	APPR.

DESIGNED BY: PEELE
DWN BY: PEELE
CKD BY:
SUBMITTED BY: WICKSTROM
DATE: 27 MAR 2015
PLOT DATE: 3/20/2015
PLOT TIME: 3:36:49 PM
FILE NUMBER: E-12-7-236
SIZE: ANSI D
FILE NAME: PN448194_GRDK_C-302

U.S. ARMY CORPS OF ENGINEERS
SEATTLE DISTRICT
SEATTLE, WASHINGTON

FY15 GREEN RIVER LEVEE REHABILITATION
DYKSTRA LEVEE
AUBURN, WA

CROSS SECTIONS 2

SHEET IDENTIFICATION
C-302
SHEET 14 OF 18

DESIGN FILE: I:\AECDesigns\FY15_PN448194_GRDK\Con_Docs\CAD_Sheets\Civil\PN448194_GRDK_C-302 SITE 2 SECTIONS.dgn

DATE AND TIME PLOTTED: 3/20/2015

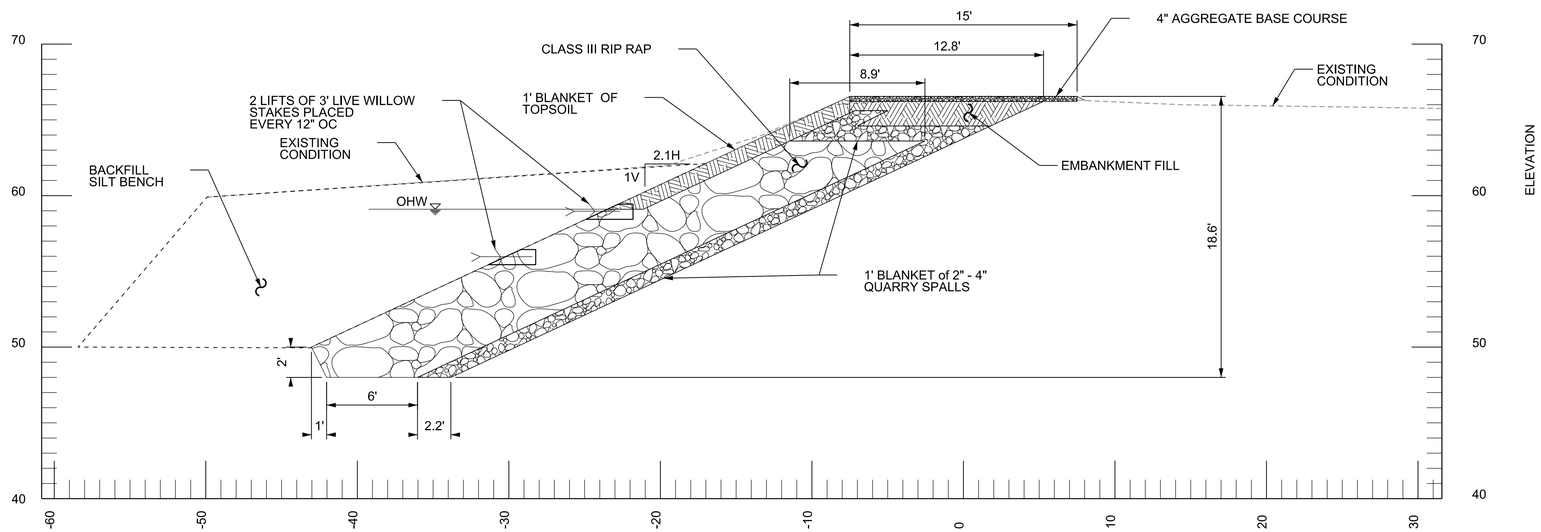

1 SITE 1 CROSS SECTION AT POB

SCALE: 1" = 5'

0 5 10

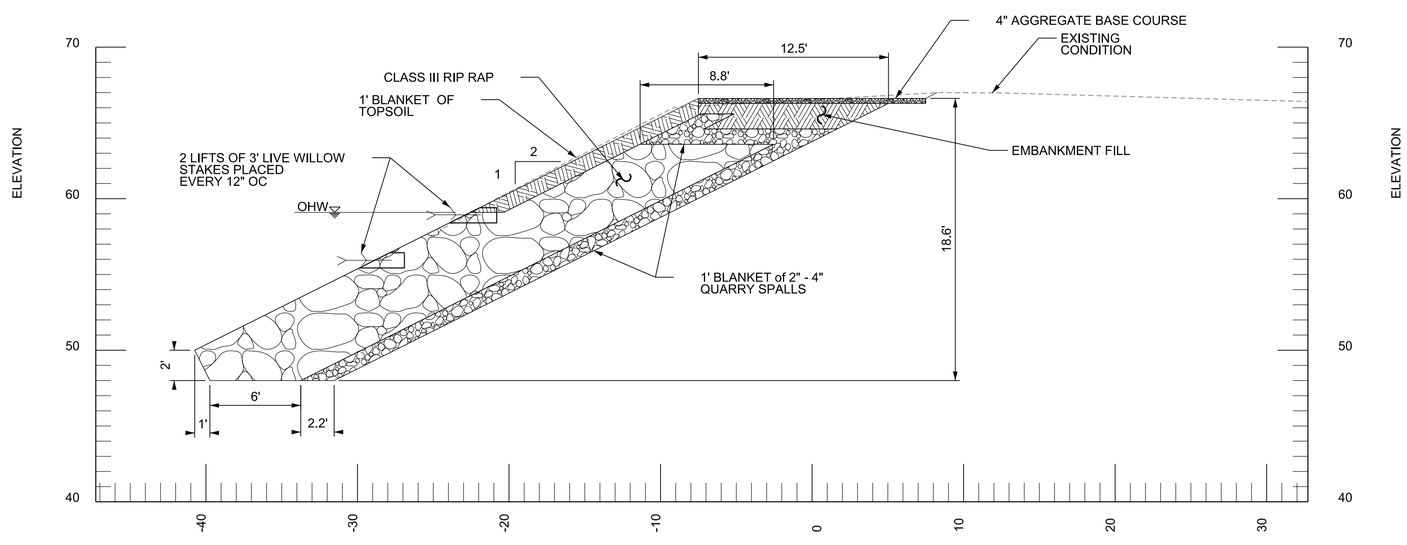

2 SITE 1 CROSS SECTION AT POE

SCALE: 1" = 5'

0 5 10

US Army Corps of Engineers®
SEATTLE DISTRICT

MARK	DESCRIPTION	DATE	APPR.

MARK	DESCRIPTION	DATE	APPR.

U.S. ARMY CORPS OF ENGINEERS
SEATTLE DISTRICT
SEATTLE, WASHINGTON

DESIGNED BY: PEELE
DWN BY: PEELE
CKD BY:
SUBMITTED BY: WICKSTROM
DATE: 27 MAR 2015
PLOT DATE: 3/20/2015
PLOT TIME: 3:36:51 PM
FILE NUMBER: E-12-7-236
SIZE: ANSI D
FILE NAME: PN448494_GRDK_C-303

FY15 GREEN RIVER LEVEE REHABILITATION
DYKSTRA LEVEE
AUBURN, WA

CROSS SECTIONS 3

SHEET IDENTIFICATION
C-303
SHEET 15 OF 18

DESIGN FILE: I:\AECDesigns\FY15_PN448194_GRDK\Con_Docs\CAD_Sheets\Civil\PN448194_GRDK_C-303 SITE 3 SECTIONS.dgn

DATE AND TIME PLOTTED: 3/20/2015

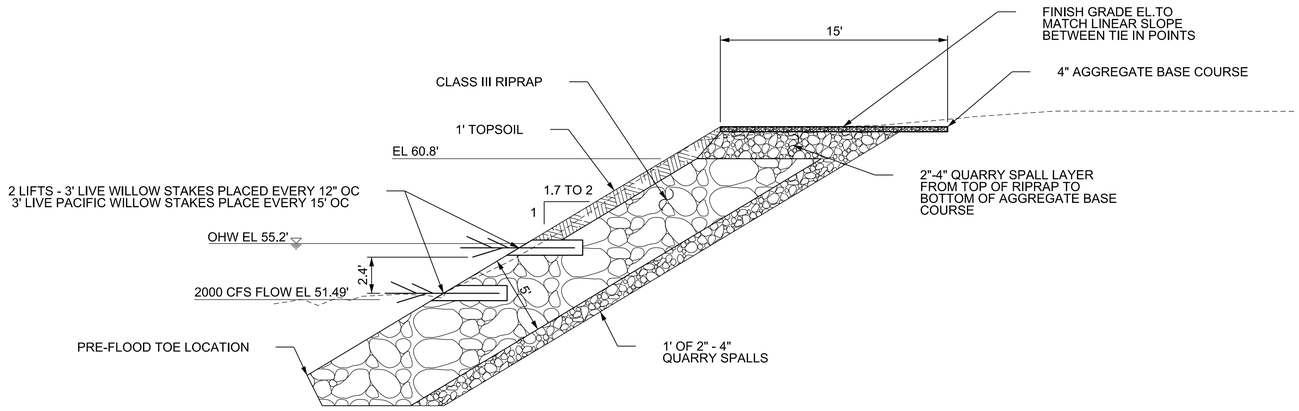

1 SITE 1 TYPICAL CROSS SECTION

SCALE: 1" = 5'

0 5 10

US Army Corps of Engineers®
SEATTLE DISTRICT

MARK	DESCRIPTION	DATE	APPR.

MARK	DESCRIPTION	DATE	APPR.

U.S. ARMY CORPS OF ENGINEERS
SEATTLE DISTRICT
SEATTLE, WASHINGTON

DESIGNED BY: KLEIN
DWN BY: KLEIN
CKD BY:
SUBMITTED BY: WICKSTROM
DATE: 27 MAR 2015
PLOT DATE: 3/20/2015
PLOT TIME: 3:36:53 PM
FILE NUMBER: E-12-7-236
SIZE: ANSI D
FILE NAME: PN448194_GRDK_C-501

FY15 GREEN RIVER LEVEE REHABILITATION
DYKSTRA LEVEE
AUBURN, WA

SITE 1 DETAILS

SHEET IDENTIFICATION
C-501
SHEET 16 OF 18

DESIGN FILE: I:\AECDesigns\FY15_PN448194_GRDK\Con_Docs\CAD_Sheets\Civil\PN448194_GRDK_C-501 SITE 1 DETAILS.dgn

DATE AND TIME PLOTTED: 3/20/2015

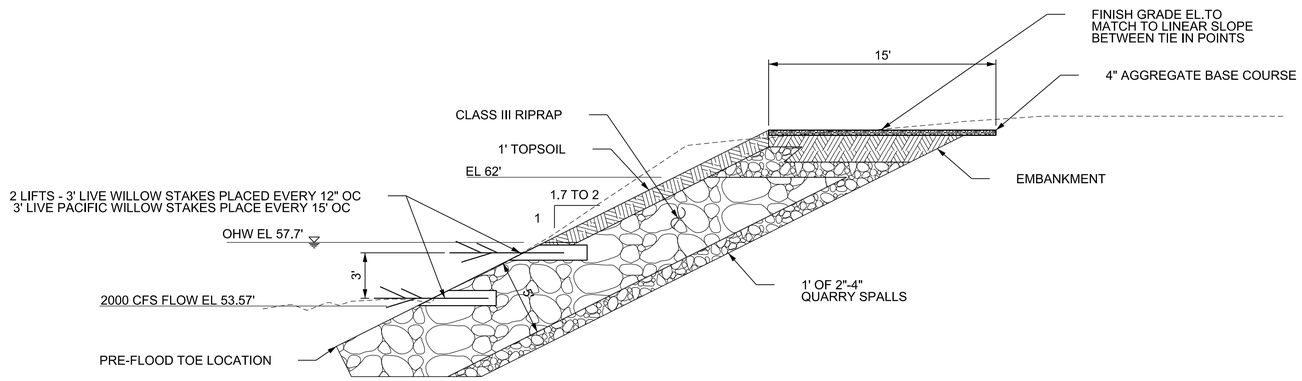

1 SITE 2 TYPICAL CROSS SECTION

SCALE: 1" = 5'

0 5 10

US Army Corps of Engineers®
SEATTLE DISTRICT

MARK	DESCRIPTION	DATE	APPR.

MARK	DESCRIPTION	DATE	APPR.

U.S. ARMY CORPS OF ENGINEERS
SEATTLE DISTRICT
SEATTLE, WASHINGTON

DESIGNED BY: KLEIN
DWN BY: KLEIN
CKD BY:
SUBMITTED BY: WICKSTROM
PLOT DATE: 3/20/2015
PLOT TIME: 3:36:55 PM
SIZE: ANSI D
FILE NAME: PN448194_GRDK_C-502
DATE: 27 MAR 2015
FILE NUMBER: E-12-7-236

FY15 GREEN RIVER LEVEE REHABILITATION
DYKSTRA LEVEE
AUBURN, WA

SITE 2 DETAILS

SHEET IDENTIFICATION
C-502
SHEET 17 OF 18

DESIGN FILE: I:\AECDesigns\FY15_PN448194_GRDK\Con_Docs\CAD_Sheets\Civil\PN448194_GRDK_C-502 SITE 2 DETAILS.dgn

DATE AND TIME PLOTTED: 3/20/2015

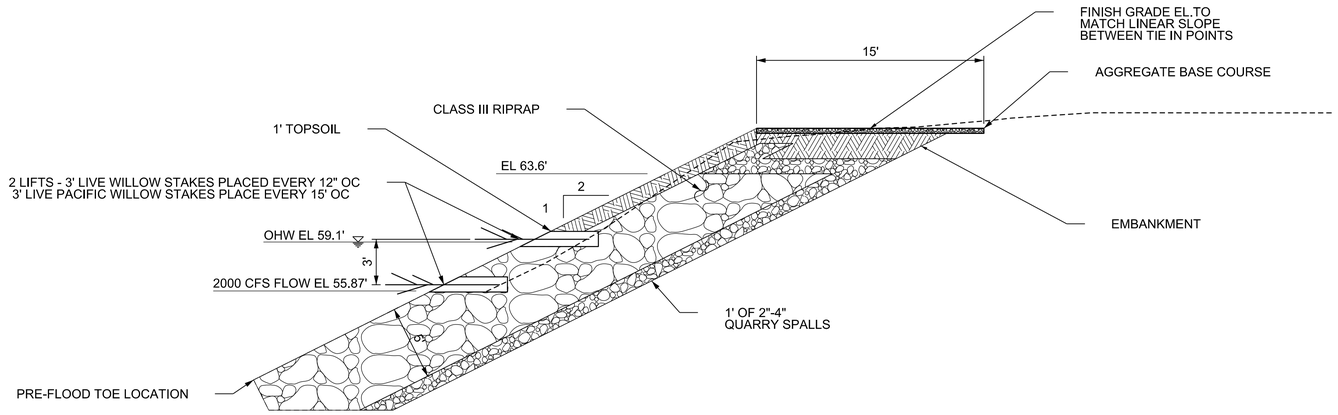

1 SITE 3 TYPICAL CROSS SECTION

SCALE: 1" = 5'

0 5 10

US Army Corps of Engineers®
SEATTLE DISTRICT

MARK	DESCRIPTION	DATE	APPR.

MARK	DESCRIPTION	DATE	APPR.

U.S. ARMY CORPS OF ENGINEERS
SEATTLE DISTRICT
SEATTLE, WASHINGTON

DESIGNED BY: KLEIN
DWN BY: PEELE
CKD BY:
SUBMITTED BY: WICKSTROM
PLOT DATE: 3/20/2015
PLOT TIME: 3:36:56 PM
SIZE: ANSI D
FILE NAME: PN448194_GRDK_C-503
DATE: 27 MAR 2015
FILE NUMBER: E-12-7-236

FY15 GREEN RIVER LEVEE REHABILITATION
DYKSTRA LEVEE
AUBURN, WA

SITE 3 DETAILS

SHEET IDENTIFICATION
C-503
SHEET 18 OF 18

DESIGN FILE: I:\AECDesigns\FY15_PN448194_GRDK\Con_Docs\CAD_Sheets\Civil\PN448194_GRDK_C-503 SITE 3 DETAILS.dgn

DATE AND TIME PLOTTED: 3/20/2015