US Army Corps of Engineers ®

Seattle District

PL 84-99 LEVEE REHABILITATION DESIMONE-BRISCOE SCHOOL, GREEN RIVER

TUKWILA, WASHINGTON

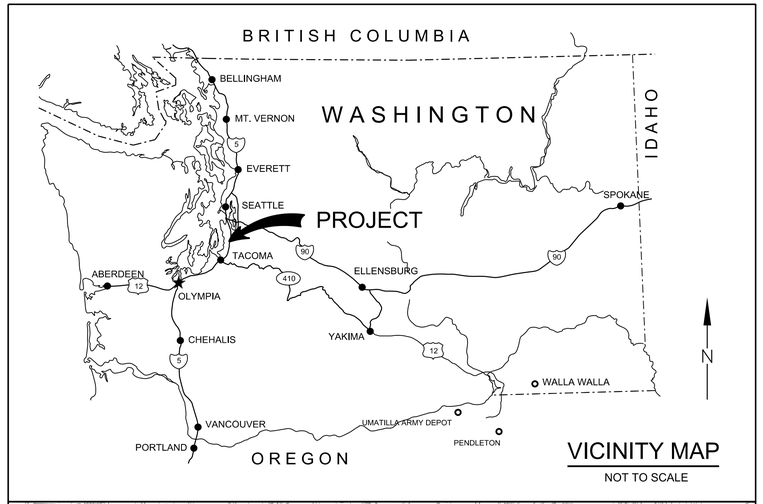

VICINITY MAP

NOT TO SCALE

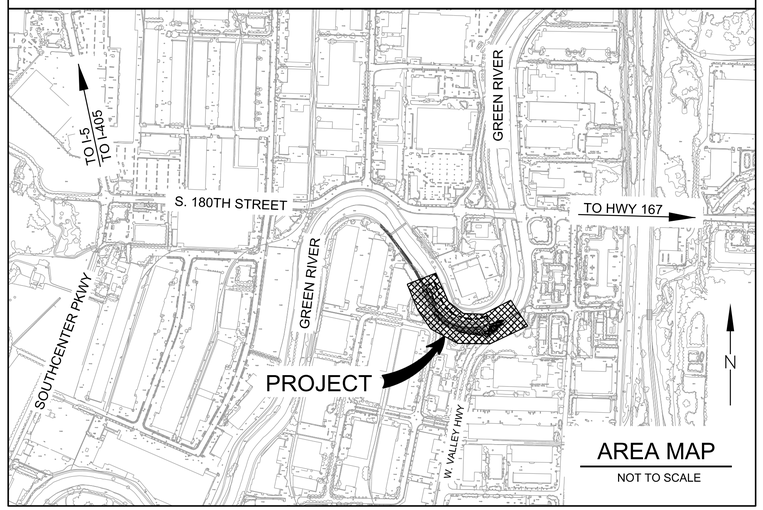

AREA MAP

NOT TO SCALE

FY15 GRN-01-14

NOT ALL UTILITIES ARE SHOWN ON THE PLANS, CALL 2 WORKING DAYS BEFORE YOU DIG 1-800-424-5555

IF SHEET MEASURES LESS THAN 22" X 34" IT IS A REDUCED PRINT. REDUCE SCALE ACCORDINGLY.

US Army Corps of Engineers ® Seattle District

File No.: E-12-7-235

Date: 29 APRIL, 2015

SOLICITATION NUMBER: W912DW-15-T-0003

Recommended by: JENNIFER L. WEST, P.E. — Chief, Design Branch — 4/2015 Date

Approved by: JOANN T. WALLS — Chief, Engineering Division — 4/2015 Date

Submitted by: LEAH WICKSTROM, P.E. — Project Manager

Reviewed by: ANIL L. NISARGAND, P.E. — Chief, Specs and Review Section — 4/2015 Date

U.S. ARMY CORPS OF ENGINEERS
SEATTLE DISTRICT
SEATTLE, WASHINGTON

Prepared by: KIM S. MAY, P.E. — Chief, Civil Section — 4/2015 Date

DESIMONE-BRISCOE SCHOOL LEVEE REHABILITATION
TUKWILA, WASHINGTON

TITLE: VICINITY MAP, AND AREA MAP

SHEET IDENTIFICATION
G-001
SHEET 1 OF 17

DESIGN FILE: I:\AECDesigns\FY15_PN448192_GRDL\Con_Docs\CAD_Sheets\General\PN448192_GRDL-G-001CVR.dgn

DATE AND TIME PLOTTED: 5/1/2015

DRAWING INDEX

SHEET NUMBER	SHEET IDEN.	TITLE
1	G-001	TITLE, VICINITY MAP, AND AREA MAP
2	G-002	DRAWING INDEX
3	C-001	LEGEND, ABBREVIATIONS, AND NOTES
4	C-002	HAUL ROUTE AND STAGING AREA 1
5	C-003	HAUL ROUTE AND STAGING AREA 2
6	C-004	GENERAL SITE PLAN
7	C-101	EXISTING CONDITIONS / DEMO PLAN
8	C-102	SITE PLAN 1
9	C-103	SITE PLAN 2
10	C-104	SITE PLAN 3
11	C-105	HORIZONTAL CONTROL TABLE
12	C-301	CROSS-SECTIONS 1
13	C-302	CROSS-SECTIONS 2
14	C-501	SECTIONS
15	L-101	PLANTING PLAN 1
16	L-102	PLANTING PLAN 2
17	L-103	PLANTING PLAN 3

REFERENCE DRAWING INDEX

REFERENCE DWG. NO.	TITLE
1	COVER SHEET
2	VICINITY MAP, FLOODWALL SHEET INDEX AND TYPICAL SECTIONS
3	LEGEND, NOTES, DATUM AND ABBREVIATIONS
4	TESC NOTES AND DETAILS
5	TESC PLAN & SECTION
6	SANITARY SEWER FORCEMAIN PLAN
7	FLOOD WALL PLAN AND PROFILE
8	FLOOD WALL PLAN AND PROFILE
9	SHEET PILE LAYOUT PLAN
10	SHEET PILE LAYOUT PLAN
11	CROSS SECTIONS 13+50 - 15+00
12	CROSS SECTIONS 15+50 - 17+00
13	CROSS SECTIONS 17+50 - 19+00
14	CROSS SECTIONS 19+50 - 21+00
15	CROSS SECTIONS 21+50 - 23+00
16	EAST & WEST TRANSITION DETAILS
17	ACCESS RAMP GRADING PLAN & PROFILE
18	PARKING LOT RESTORATION, 18251 CASCADE AVE. S.
19	PARKING LOT RESTORATION, 18251 CASCADE AVE. S.
20	RIGHT OF WAY PLAN
21	SECTIONS AND DETAILS
22	SECTIONS AND DETAILS
23	WATERSTOP DETAILS
24	TIEBACK DETAILS
25	HAND RAIL ELEVATIONS, SECTIONS AND DETAILS
26	REMOVABLE BOLLARD DETAILS
27	ACCESS RAMP RETAINING WALL DETAILS

NOT ALL UTILITIES ARE SHOWN ON THE PLANS, CALL 2 WORKING DAYS BEFORE YOU DIG 1-800-424-5555

US Army Corps of Engineers®
SEATTLE DISTRICT

MARK	DESCRIPTION	DATE	APPR.

MARK	DESCRIPTION	DATE	APPR.

U.S. ARMY CORPS OF ENGINEERS
SEATTLE DISTRICT
SEATTLE, WASHINGTON

DESIGNED BY: M. PEELE
DWN BY: L. LEJON
CKD BY: L. FORD
SUBMITTED BY: L. WICKSTROM
PLOT DATE: 5/1/2015
SIZE: ANSI D
PLOT TIME: 2:26:57 PM
FILE NAME:
DATE: 29 APRIL, 2015
SOLICITATION NUMBER: W-912DW-15-T-0003
FILE NUMBER: E-12-7-235

DESIMONE-BRISCOE SCHOOL LEVEE REHABILITATION
TUKWILA, WASHINGTON

DRAWING INDEX

SHEET IDENTIFICATION
G-002
SHEET 2 OF 17

DESIGN FILE: I:\AECDesigns\FY15_PN448192_GRDL\Con_Docs\CAD_Sheets\General\PN448192_GRDL-G-002IND.dgn

DATE AND TIME PLOTTED: 5/1/2015

CIVIL NOTES

LINETYPES

20	EXISTING CONTOURS
20	PROPOSED CONTOURS
	CONSTRUCTION LIMITS

LEGEND

	CONCRETE PAVEMENT
	CUT/FILL ARROW
EL 18.2	EXISTING SPOT ELEVATION
EL 21.00	PROPOSED SPOT ELEVATION
	TREE

ABBREVIATIONS

APPROX.	APPROXIMATE
CONC	CONCRETE
COR	USACE CONTRACTING OFFICER REPRESENTATIVE
DIAM., DIA	DIAMETER
E	EAST
EL, ELEV	ELEVATION
EMB	EMBANKMENT
EO	EDGE OF
EOA	EDGE OF ASPHALT
EOC	EDGE OF CONCRETE
EOG	EDGE OF GRAVEL
EP	EDGE OF PAVEMENT
EXC	EXCAVATION
EXIST, EX	EXISTING
FIG	FIGURE
FT	FEET/FOOT
HMA	HOT MIX ASPHALT
H, HORIZ	HORIZONTAL
IN	INCH/INCHES
L	LENGTH
LF	LINEAL FOOT/FEET
LT	LEFT
MAX.	MAXIMUM
MIN	MINIMUM
MISC	MISCELLANEOUS
MM	MILLIMETER
N	NORTH
NIC	NOT IN CONTRACT
NTS	NOT TO SCALE
OC, O.C.	ON CENTER
PSI	POUNDS PER SQUARE INCH
R	RADIUS
REQD	REQUIRED
SPEC	SPECIFICATION
STA	STATION
STD	STANDARD
TEMP	TEMPORARY
TYP	TYPICAL
VAR	VARIES
V, VERT	VERTICAL
W/	WITH
W.S.	WATER SURFACE
WSDOT	WASHINGTON STATE DEPARTMENT OF TRANSPORTATION

DRAFTING

X / C-304	DIRECTION OF VIEW LETTER INDICATES CIVIL SECTION NUMBER INDICATES ELEV OR DETAIL PLATE NUMBER WHERE SECTION/DETAIL IS DRAWN
X / C-502	NUMBER INDICATES DETAIL NO. PLATE NUMBER WHERE DETAIL IS DRAWN
N	NORTH ARROW
0 20 40	GRAPHIC SCALE (FEET)

SURVEY/DATUM

MAPPING COMPILED BY CITY OF KENT ON JUNE 9, 2011.

VERTICAL DATUM: NAVD '88 HORIZONTAL DATUM: NAD 83/91

CITY OF KENT BENCHMARK NO. 850, BENCHMARK ELEVATION: 31.824

BENCHMARK DESCRIPTION: SET MAG NAIL WITH 1-1/2" CITY OF KENT ALUMINUM WASHER IN ASPHALT ON WEST SIDE OF WEST VALLEY HIGHWAY AT NORTHWEST CORNER OF DRIVEWAY APRON AT ENTRANCE TO BIKE TRAIL AT NORTH END OF RIVERPOINT CORPORATE CENTER, AT TODD BLVD. AND WEST VALLEY HIGHWAY.

CITY OF KENT BENCHMARK NO. 851, BENCHMARK ELEVATION: 33.496

BENCHMARK DESCRIPTION: SET MAG NAIL WITH 1-1/2" CITY OF KENT ALUMINUM WASHER IN BIKE TRAIL ON EAST SIDE OF GREEN RIVER IN BRISCOE PARK, BEHIND BUILDING NO. 6020 IN CUL-DE-SAC AT INTERSECTION OF S. 190 ST. AND 62 AVE. S. MAG NAIL IS IN TRAIL WEST OF TWO COVERED PICNIC AREAS.

UTILITIES CONTACT INFORMATION

COMPANY	PHONE
CALL-BEFORE-YOU-DIG	(800) 424-5555
PUGET SOUND ENERGY	(425) 392-6412
CITY OF TUKWILA	(206) 433-0179

LEVEE CONSTRUCTION NOTES

1. CONTRACTOR SHALL VERIFY ALL DIMENSIONS IN THE FIELD BEFORE STARTING WORK AND SHALL IMMEDIATELY NOTIFY THE CORPS OF ENGINEERS OF ANY DISCREPANCIES WITH RESPECT TO THE PLANS.

2. BEFORE EXCAVATION OR TRENCHING, CONTRACTOR SHALL SUBMIT A UTILITY LOCATE REQUEST (CALL BEFORE YOU DIG) THROUGH THE STATE OF WASHINGTON UTILITY NOTIFICATION CENTER IN ACCORDANCE WITH STATE OF WASHINGTON LAW: CHAPTER 19.122 RCW - UNDERGROUND UTILITIES. NO EXCAVATION MAY BEGIN UNTIL THE TIME STATED ON THE LOCATE TICKET. THE ONE-CALL PHONE NUMBER FOR UTILITY LOCATES IS: 1-800-424-5555.

3. ANY DAMAGE TO EXISTING SUBSURFACE OR SURFACE FACILITIES SHALL BE REPAIRED BY THE CONTRACTOR AT NO COST TO THE OWNER.

4. THE HORIZONTAL AND VERTICAL LOCATIONS OF EXISTING UTILITIES AND IMPROVEMENTS ARE APPROXIMATE. THE CONTRACTOR SHALL VERIFY THE EXACT LOCATION OF ALL UTILITIES AND IMPROVEMENTS PRIOR TO EXCAVATION TO AVOID DAMAGE. THE CONTRACTOR IS RESPONSIBLE FOR PROTECTING AND PRESERVING THE INTEGRITY OF EXISTING SITE UTILITIES DURING CONSTRUCTION.

5. ALL DISTANCES SHOWN ON THE DRAWINGS AND DESCRIBED IN THE SPECIFICATION SHALL BE INTERPRETED TO REFER TO HORIZONTALLY AND VERTICALLY PROJECTED PLANES, UNLESS OTHERWISE NOTED.

6. THE CONTRACTOR SHALL BE RESPONSIBLE FOR FULL RESTORATION OF ALL EXISTING FEATURES DISTURBED DURING CONSTRUCTION TO THEIR ORIGINAL CONDITION, UNLESS OTHERWISE INDICATED BY THE CONSTRUCTION DOCUMENTS.

7. PRELIMINARY CLEARING AND GRUBBING, STAGING AREAS AND CONSRUCTION ACCESS RAMP

   (A) ESTABLISH CONSTRUCTION STAGING AREAS, AS SHOWN ON PLANS.

   (B) INSTALL TEMPORARY EROSION CONTROL MEASURES FOR PHASES OF WORK TO BE CONDUCTED. WORKING AS CONSTRUCTION ADVANCES, CONTINUE TO INSTALL SILT FENCING ALONG FULL LENGTH OF DISTURBED AREAS OF THE PROJECT SITE. INSTALL EROSION CONTROL MEASURES AS NEEDED TO PREVENT THE DISCHARGE OR ACCUMULATION OF SEDIMENT INTO THE RIVER, ADJACENT SWALES, CATCH BASINS AND STORM DRAINS AND OFF-SITE. ACCUMULATION OF SEDIMENT IN ADJACENT SWALES OR STORM DRAINS WILL BE MONITORED DAILY AND CLEANED TO ENSURE CONTINUED SERVICE THROUGHTOUT CONSTRUCTION.

   (C) CLEAR AND GRUB PROJECT SITE. DISPOSE OF VEGETATION AND OTHER UNSUITABLE MATERIALS IN AN APPROVED AND PERMITTED OFF-SITE LOCATION.

8. RESTORATION, TRAIL RESURFACING, AND TEMPORARY CONSTRUCTION WORK AREAS

   (A) CONSTRUCT ASPHALT PAVED TRAIL ALONG TOP OF LEVEE AND RESTORE ASPHALT ON ALL DISTURBED AREAS, INCLUDING TEMPORARY CONSTRUCTION ACCESS AND WORK AREAS.

   (B) HYDROSEED ALL DISTURBED SITE AREAS PRIOR TO END OF CONSTRUCTION.

   (C) RESTORE TEMPORARY WORK AREAS TO PRE-CONSTRUCTION CONDITION. REPLACE ANY DAMAGED CURBS, PAINT STRIPES, ETC. IN KIND.

   (D) RESTORE ACCESS ROAD CONDITIONS AND FEATURES (FENCING, GATES, ETC...) TO PRE-CONSTRUCTION CONDITIONS.

9. CONSTRUCTION

   (A) ALL IN-WATER PROJECT WORK SHALL BE COMPLETED DURING THE FISH WINDOW, SEE SPECIFICATION 01 14 00 FOR FISH WINDOW.

   (B) THE LIMITS OF THE STAGING AREA WILL BE DELINEATED IN THE FIELD BEFORE THE START OF CONSTRUCTION. FOLLOWING CONSTRUCTION, CONSTRUCTION MATERIALS WILL BE REMOVED AND ANY DISTURBED BARE SOIL IN ANY UNPAVED PORTION OF THE STAGING AREA WILL BE HYDROSEEDED.

   (C) HEAVY EQUIPMENT WILL OPERATE EITHER FROM THE TOP OF BANK OR FROM A MID-SLOPE BENCH WELL ABOVE THE WATERLINE. THE EXCAVATOR BUCKET WILL ENTER THE WATER ONLY TO EXCAVATE MATERIAL TO ALLOW PLACEMENT OF ROCK AND FOR PLACEMENT OF ROCK.

   (D) ALL GAS AND OIL CONTAINERS FOR SMALL EQUIPMENT SHALL BE SAFELY AND SECURELY STORED IN UTILITY VEHICLES.

   (E) ALL WORK AREAS SHALL BE FENCED OFF WITH TEMPORARY FENCING PRIOR TO START OF CONSTRUCTION. NO GROUND DISTURBANCE OR OTHER CONSTRUCTION ACTIVITY SHALL TAKE PLACE OUTSIDE OF FENCING.

   (F) NO NATURALLY OCCURRING MATERIAL (LOGS, STUMPS, OR BRANCHES) SHALL BE REMOVED FROM THE RIVER AT ANY TIME. SHIFTING OF MATERIAL AS NEEDED FOR CONSTRUCTION SHALL BE APPROVED BY THE COR.

   (G) SEE SPECIFICATION 01 57 20 WATER QUALITY STANDARDS FOR TURBIDITY SAMPLING REQUIREMENTS.

10. EROSION CONTROL AND VEGETATION

   (A) VEGETATION TO BE PRESERVED AND CLEARING LIMITS WILL BE FLAGGED IN THE FIELD PRIOR TO THE START OF CONSTRUCTION BY THE PROJECT ENGINEER OR THE PROJECT ECOLOGIST.

   (B) EROSION CONTROL HYDROSEED MIX WILL BE USED TO ESTABLISH INITIAL GROUND COVER ON ALL DISTURBED AREAS, USING WASHINGTON STATE DEPARTMENT OF TRANSPORTATION HYDROSEED MIX.

11. COORDINATE TEMPORARY CONSTRUCTION SIGN LOCATION WITH COR.

NOT ALL UTILITIES ARE SHOWN ON THE PLANS, CALL 2 WORKING DAYS BEFORE YOU DIG 1-800-424-5555

US Army Corps of Engineers®
SEATTLE DISTRICT

MARK	DESCRIPTION	DATE	APPR.	MARK	DESCRIPTION	DATE	APPR.

U.S. ARMY CORPS OF ENGINEERS
SEATTLE DISTRICT
SEATTLE, WASHINGTON

DESIGNED BY: M. PEELE
DWN BY: L. LEJON
CKD BY: L. FORD
SUBMITTED BY: L. WICKSTROM
DATE: 29 APRIL, 2015
SOLICITATION NUMBER: W-912DW-15-T-0003
PLOT DATE: 5/1/2015
PLOT TIME: 2:00:00 PM
FILE NUMBER: E-52-1025
SIZE: ANSI D
FILE NAME: NWS_USSF_WA_N_Site SHEET Seed_3D.dgn

DESIMONE-BRISCOE SCHOOL LEVEE REHABILITATION
TUKWILA, WASHINGTON

LEGEND, ABBREVIATIONS AND NOTES

SHEET IDENTIFICATION
C-001
SHEET 3 OF 17

DESIGN FILE: I:\AECDesigns\FY15_PN448192_GRDL\Con_Docs\CAD_Sheets\Civil\PN448192_GRDL-C-001LEG.dgn

DATE AND TIME PLOTTED: 5/1/2015

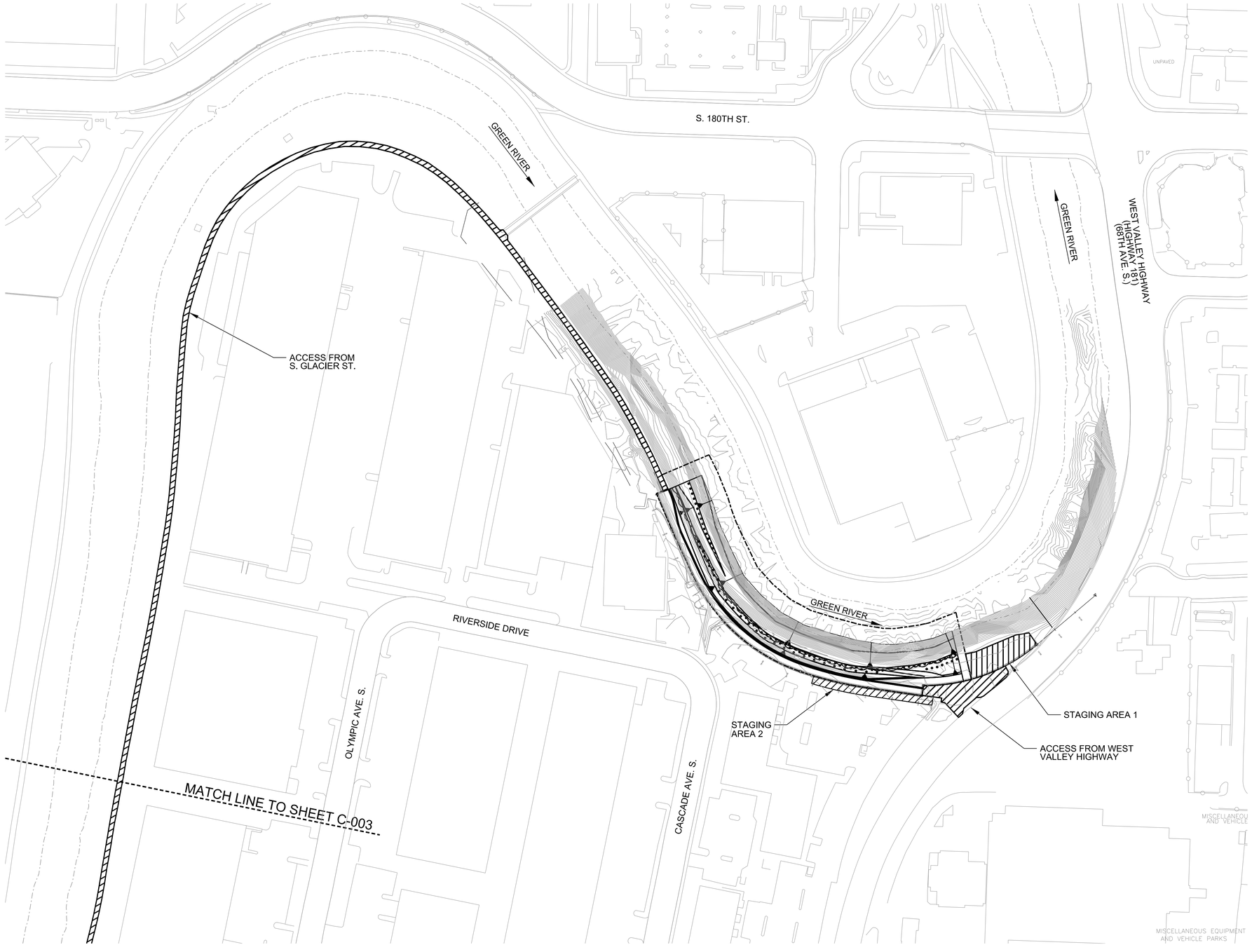

1 C-002 HAUL ROUTE AND STAGING AREA 1
1" = 100'
0 100' 200'

NOTES:

1. FOR LEGEND, ABBREVIATIONS, AND GENERAL NOTES, SEE SHEET C-001.

2. MAPPING COMPILED FROM FEBRUARY 2006 AERIAL PHOTOS MAPPING 3D1WEST FOR KING COUNTY DNR AND PARKS. MAP SCALE: 1"=100', CONTOUR INTERVAL: 2'. HORIZONTAL DATUM: NAD 83/91 (HARN) WA STATE PLANE, NORTH ZONE (FEET). VERTICAL DATUM: NAVD '88. MAP HAS NOT BEEN COMPREHENSIVELY VERIFIED BY FIELD CHECKS.

3. ALL REAL ESTATE REQUIREMENTS AND UTILITY RELOCATIONS NECESSARY FOR PROJECT CONSTRUCTION SHALL BE OBTAINED/PERFORMED BY KING COUNTY FLOOD CONTROL DISTRICT PRIOR TO CONSTRUCTION.

NOT ALL UTILITIES ARE SHOWN ON THE PLANS, CALL 2 WORKING DAYS BEFORE YOU DIG 1-800-424-5555

US Army Corps of Engineers®
SEATTLE DISTRICT

MARK	DESCRIPTION	DATE	APPR.	MARK	DESCRIPTION	DATE	APPR.

U.S. ARMY CORPS OF ENGINEERS
SEATTLE DISTRICT
SEATTLE, WASHINGTON

DESIGNED BY: M. PEELE
DWN BY: L. LEJON
CKD BY: L. FORD
SUBMITTED BY: L. WICKSTROM
PLOT DATE: 5/1/2015
PLOT TIME: 2:27:14 PM
SIZE: ANSI D
FILE NAME: NWS_USSF_WA_N_Site SHEET Seed_3D.dgn
DATE: 29 APRIL, 2015
SOLICITATION NUMBER: W-912DW-15-T-0003
FILE NUMBER: E-12-7-235

DESIMONE-BRISCOE SCHOOL LEVEE REHABILITATION
TUKWILA, WASHINGTON

HAUL ROUTE AND STAGING AREA 1

SHEET IDENTIFICATION
C-002
SHEET 4 OF 17

DESIGN FILE: I:\AECDesigns\FY15_PN448192_GRDL\Con_Docs\CAD_Sheets\Civil\PN448192_GRDL-C-002AHR.dgn

DATE AND TIME PLOTTED: 5/1/2015

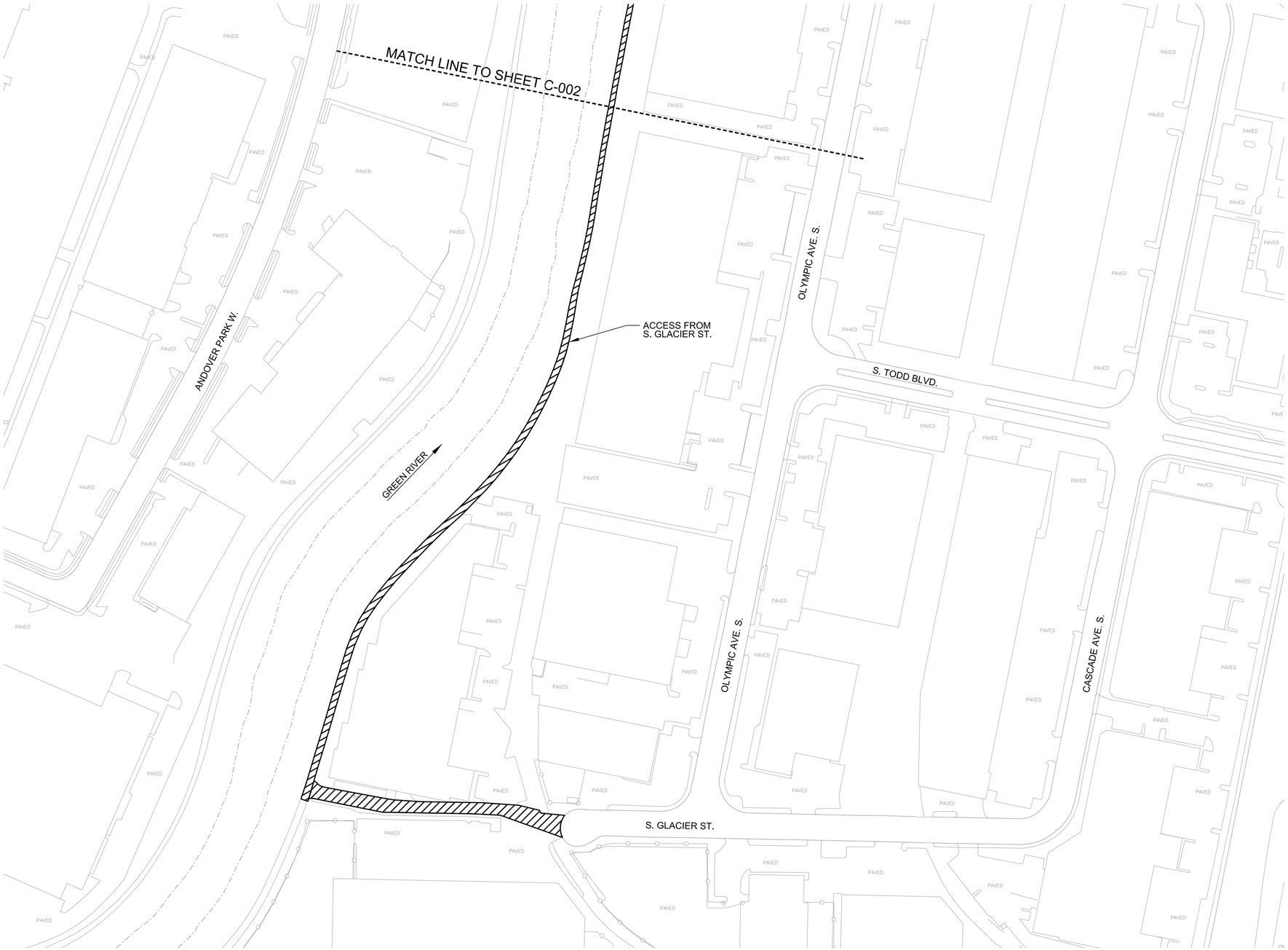

NOTES:

1. FOR LEGEND, ABBREVIATIONS, AND GENERAL NOTES, SEE SHEET C-001.

2. MAPPING COMPILED FROM FEBRUARY 2006 AERIAL PHOTOS MAPPING 3D1WEST FOR KING COUNTY DNR AND PARKS. MAP SCALE: 1"=100', CONTOUR INTERVAL: 2'. HORIZONTAL DATUM: NAD 83/91 (HARN) WA STATE PLANE, NORTH ZONE (FEET). VERTICAL DATUM: NAVD '88. MAP HAS NOT BEEN COMPREHENSIVELY VERIFIED BY FIELD CHECKS.

3. ALL REAL ESTATE REQUIREMENTS AND UTILITY RELOCATIONS NECESSARY FOR PROJECT CONSTRUCTION SHALL BE OBTAINED/PERFORMED BY KING COUNTY FLOOD CONTROL DISTRICT PRIOR TO CONSTRUCTION.

N

1 / C-003 HAUL ROUTE AND STAGING AREA 2

1" = 100'

0 100' 200'

NOT ALL UTILITIES ARE SHOWN ON THE PLANS, CALL 2 WORKING DAYS BEFORE YOU DIG 1-800-424-5555

US Army Corps of Engineers®
SEATTLE DISTRICT

MARK	DESCRIPTION	DATE	APPR.	MARK	DESCRIPTION	DATE	APPR.

U.S. ARMY CORPS OF ENGINEERS
SEATTLE DISTRICT
SEATTLE, WASHINGTON

DESIGNED BY: D. NEBELE
DWN BY: L. LEUDON
CKD BY: L. FORD
SUBMITTED BY: M. WAGERSPACK
DATE: 29 APRIL, 2015
SOLICITATION NUMBER: W-912DW-15-T-0003
PLOT DATE: 2/27/2015
PLOT TIME: 2:17:11 PM
SIZE: ANSI D
FILE NUMBER: E-C8-0825
FILE NAME: NWS_USSF_WA_N_Site SHEET Seed_3D.dgn

DESIMONE-BRISCOE SCHOOL LEVEE REHABILITATION
TUKWILA, WASHINGTON

HAUL ROUTE AND STAGING AREA 2

SHEET IDENTIFICATION
C-003
SHEET 5 OF 17

DESIGN FILE: I:\AECDesigns\FY15_PN448192_GRDL\Con_Docs\CAD_Sheets\Civil\PN448192_GRDL-C-003AHR.dgn

DATE AND TIME PLOTTED: 5/1/2015

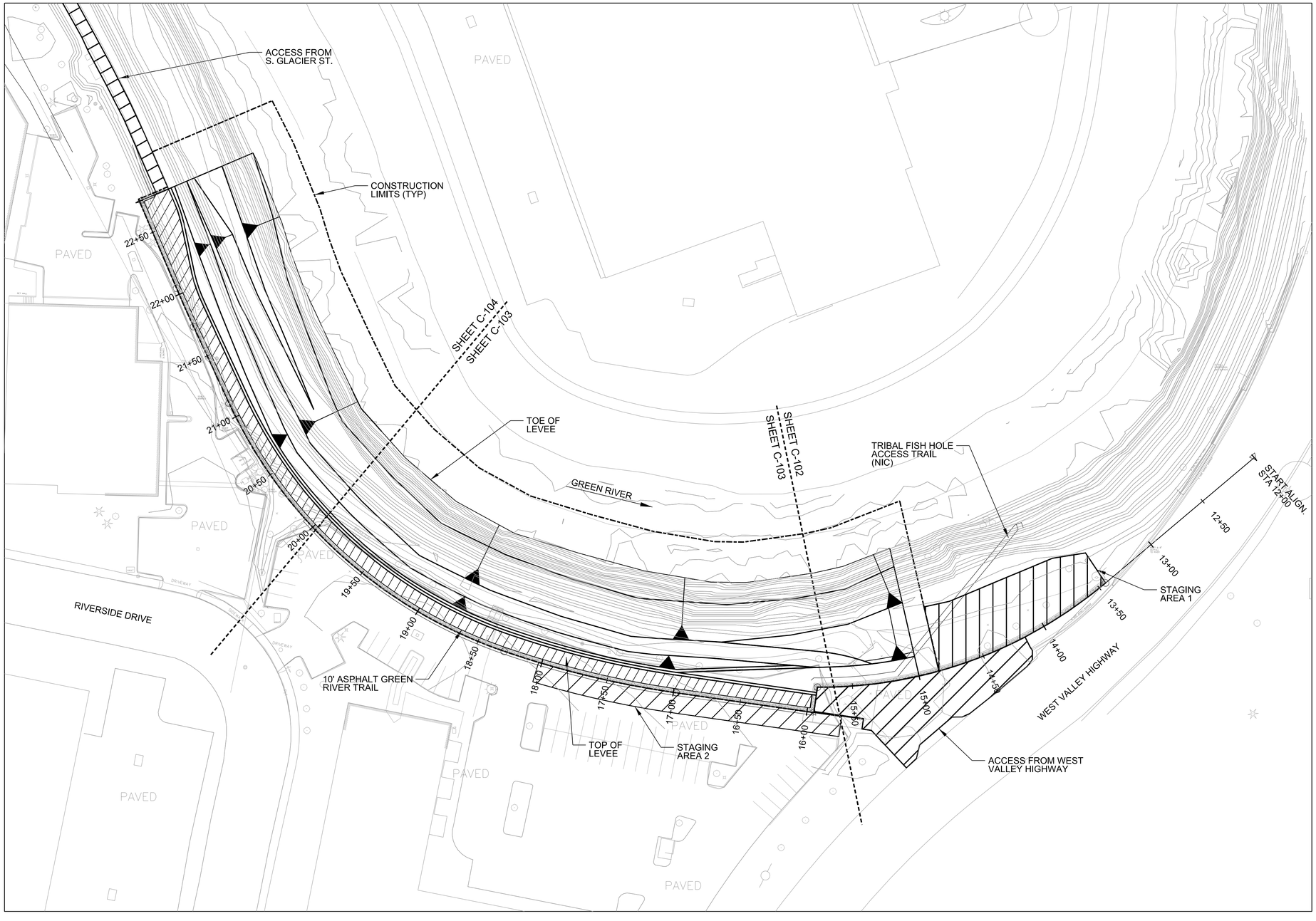

N

1 C-004 GENERAL SITE PLAN

1" = 40'

0 40' 80'

NOTES:

1. FOR LEGEND, ABBREVIATIONS, AND GENERAL NOTES, SEE SHEET C-001.

2. MAPPING COMPILED FROM FEBRUARY 2006 AERIAL PHOTOS MAPPING 3D1WEST FOR KING COUNTY DNR AND PARKS. MAP SCALE: 1"=100', CONTOUR INTERVAL: 2'. HORIZONTAL DATUM: NAD 83/91 (HARN) WA STATE PLANE, NORTH ZONE (FEET). VERTICAL DATUM: NAVD '88. MAP HAS NOT BEEN COMPREHENSIVELY VERIFIED BY FIELD CHECKS.

3. ALL REAL ESTATE REQUIREMENTS AND UTILITY RELOCATIONS NECESSARY FOR PROJECT CONSTRUCTION SHALL BE OBTAINED/PERFORMED BY KING COUNTY FLOOD CONTROL DISTRICT PRIOR TO CONSTRUCTION.

NOT ALL UTILITIES ARE SHOWN ON THE PLANS, CALL 2 WORKING DAYS BEFORE YOU DIG 1-800-424-5555

US Army Corps of Engineers®
SEATTLE DISTRICT

MARK	DESCRIPTION	DATE	APPR.	MARK	DESCRIPTION	DATE	APPR.

U.S. ARMY CORPS OF ENGINEERS
SEATTLE DISTRICT
SEATTLE, WASHINGTON

DESIGNED BY: M. PEELE
DWN BY: L LEJON
CKD BY: L. FORD
SUBMITTED BY: L WICKSTROM
PLOT DATE: 5/1/2015
PLOT TIME: 2:07:27 PM
SIZE: ANSI D
FILE NAME: NWS_USSF_WA_N_Site SHEET Seed_3D.dgn
DATE: 29 APRIL, 2015
SOLICITATION NUMBER: W-912DW-15-T-0003
FILE NUMBER: E-242-265

DESIMONE-BRISCOE SCHOOL LEVEE REHABILITATION
TUKWILA, WASHINGTON

GENERAL SITE PLAN

SHEET IDENTIFICATION
C-004
SHEET 6 OF 17

DESIGN FILE: I:\AECDesigns\FY15_PN448192_GRDL\Con_Docs\CAD_Sheets\Civil\PN448192_GRDL-C-004GEN.dgn

DATE AND TIME PLOTTED: 5/1/2015

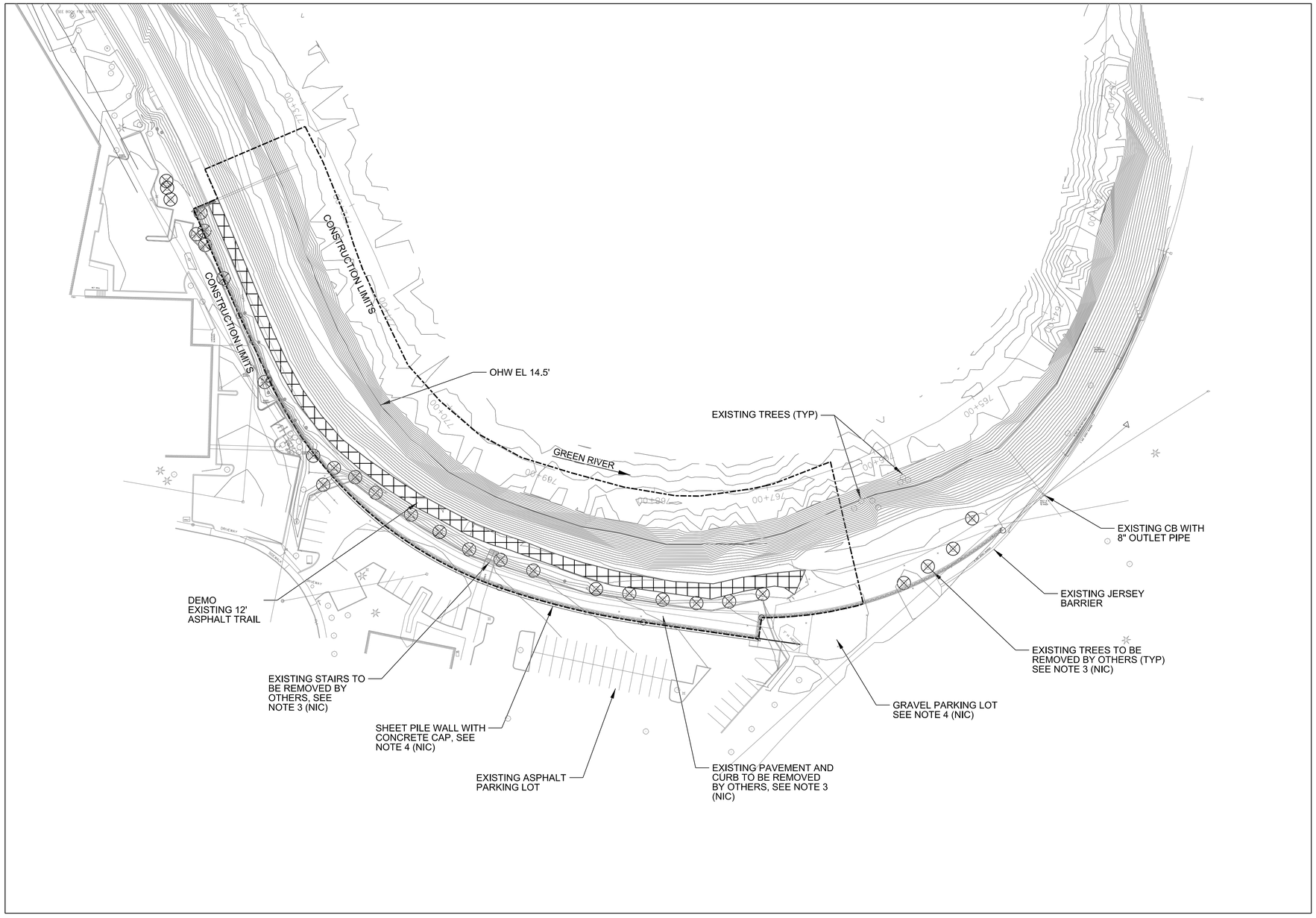

N

1 C-101 EXISTING CONDITIONS / DEMO PLAN
1" = 50'
0 50' 100'

NOTES:

1. FOR LEGEND, ABBREVIATIONS, AND GENERAL NOTES, SEE SHEET C-001.

2. SEE CITY OF KENT PUBLIC WORKS PROJECT BRISCOE-DESIMONE LEVEE IMPROVEMENTS REACH 1 FLOOD WALL INSTALLATION, RIVER MILE 14.47-14.64 JOB NUMBER 09-3011, FOR AS-DESIGN DRAWING OF RETAINING WALL CONSTRUCTION, CONDITION OF BACK FILL BETWEEN RETAINING WALL AND LEVEE PRISM AND DEMOLITION OF SITE FEATURES LANDWARD OF LEVEE CENTERLINE. WORK SHALL BE COMPLETED BY CITY OF KENT'S CONTRACTOR PRIOR TO START OF CONSTRUCTION.

3. FEATURES TO BE REMOVED BY OTHERS PRIOR TO START OF CONSTRUCTION.

4. FEATURES TO BE CONSTRUCTED BY OTHERS PRIOR TO START OF CONSTRUCTION.

TREES REMOVED BY OTHERS PRIOR TO START OF CONSTRUCTION

HISTORICAL RIVER FLOW DATA:

FLOWS (CFS)	JUNE	JULY	AUG	SEPT
MINIMUM FLOW	560	250	250	250
MAXIMUM FLOW	3600	1500	600	2100
MEAN FLOW	1200	480	320	570

WATER SURFACE ELEVATION (FEET NAVD 88)

SUMMER LOW	9.4'
SUMMER AVERAGE (600 CFS)	11'
2000CFS	15.7'

FLOW DATA BASED ON USGS GAGE 12113000 GREEN RIVER NEAR AUBURN, WA

NOT ALL UTILITIES ARE SHOWN ON THE PLANS, CALL 2 WORKING DAYS BEFORE YOU DIG 1-800-424-5555

US Army Corps of Engineers®
SEATTLE DISTRICT

MARK	DESCRIPTION	DATE	APPR.

MARK	DESCRIPTION	DATE	APPR.

U.S. ARMY CORPS OF ENGINEERS
SEATTLE DISTRICT
SEATTLE, WASHINGTON

DESIGNED BY: M. PEELE
DWN BY: L. LEJON
CKD BY: L. FORD
SUBMITTED BY: L. WICKSTROM
PLOT DATE: 5/1/2015
PLOT TIME: 2:27:26 PM
SIZE: ANSI D
FILE NAME: NWS_USSF_WA_N_Site SHEET Seed_3D.dgn
DATE: 29 APRIL, 2015
SOLICITATION NUMBER: W-912DW-15-T-0003
FILE NUMBER: E-12-7-235

DESIMONE-BRISCOE SCHOOL LEVEE REHABILITATION
TUKWILA, WASHINGTON

EXISTING CONDITIONS / DEMO PLAN

SHEET IDENTIFICATION
C-101
SHEET 7 OF 17

DESIGN FILE: I:\AECDesigns\FY15_PN448192_GRDL\Con_Docs\CAD_Sheets\Civil\PN448192_GRDL-C-101E01.dgn

DATE AND TIME PLOTTED: 5/1/2015

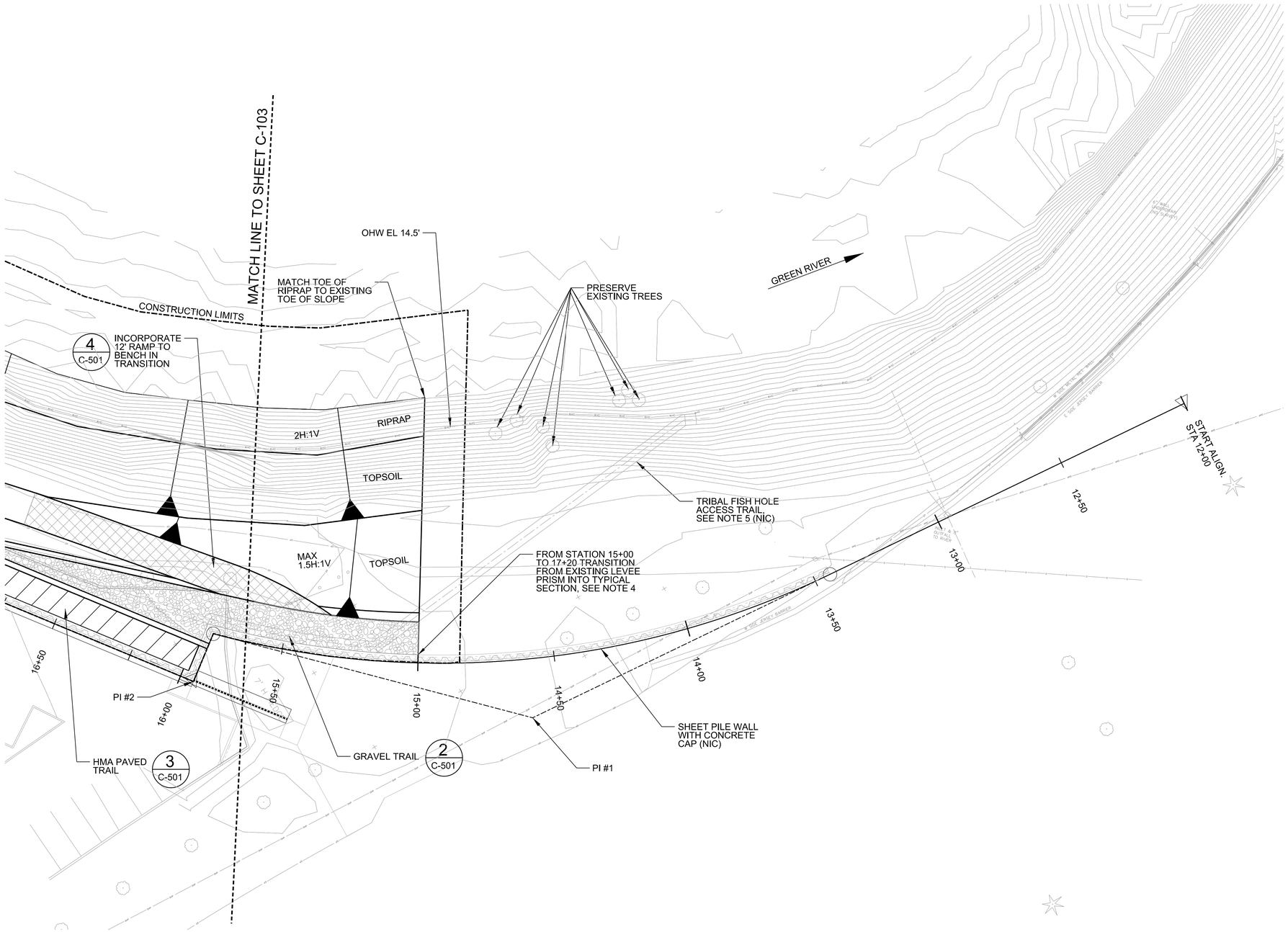

1 C-102 SITE PLAN 1
1" = 20'
0 20' 40'

NOTES:

1. FOR LEGEND, ABBREVIATIONS, AND GENERAL NOTES, SEE SHEET C-001.

2. FOR LEVEE HORIZONTAL CONTROL, SEE SHEET C-105.

3. LEVEE TOP ELEVATION SHALL MATCH THE ELEVATION OF THE TOP OF THE CONCRETE CAP BEAM.

4. FOR TRANSITION SECTIONS, SEE SHEET C-301.

5. PROVIDE 2 PARKING SPACES AND ACCESS TO TRIBAL FISHING TRAIL FOR TRIBAL MEMBERS. DO NOT OBSTRUCT TRIBAL FISHING TRAIL.

6. SEE SPECIFICATION 01 57 20 WATER QUALITY STANDARDS FOR TURBIDITY SAMPLING REQUIREMENTS

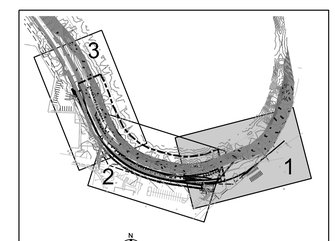

KEY PLAN

US Army Corps of Engineers®
SEATTLE DISTRICT

MARK	DESCRIPTION	DATE	APPR.	MARK	DESCRIPTION	DATE	APPR.

U.S. ARMY CORPS OF ENGINEERS
SEATTLE DISTRICT
SEATTLE, WASHINGTON

DESIGNED BY: M. PEELE
DWN BY: L. LEJON
CKD BY: L. FORD
SUBMITTED BY: L. WICKSTROM
DATE: 29 APRIL, 2015
SOLICITATION NUMBER: W-912DW-15-T-0003
PLOT DATE: 5/1/2015
PLOT TIME: 2:27:21 PM
FILE NUMBER: E-CI-1-025
SIZE: ANSI D
FILE NAME: NWS_USSF_WA_N_Site SHEET Seed_3D.dgn

DESIMONE-BRISCOE SCHOOL LEVEE REHABILITATION
TUKWILA, WASHINGTON

SITE PLAN 1

SHEET IDENTIFICATION
C-102
SHEET 8 OF 17

DESIGN FILE: I:\AECDesigns\FY15_PN448192_GRDL\Con_Docs\CAD_Sheets\Civil\PN448192_GRDL-C-102S01.dgn

DATE AND TIME PLOTTED: 5/1/2015

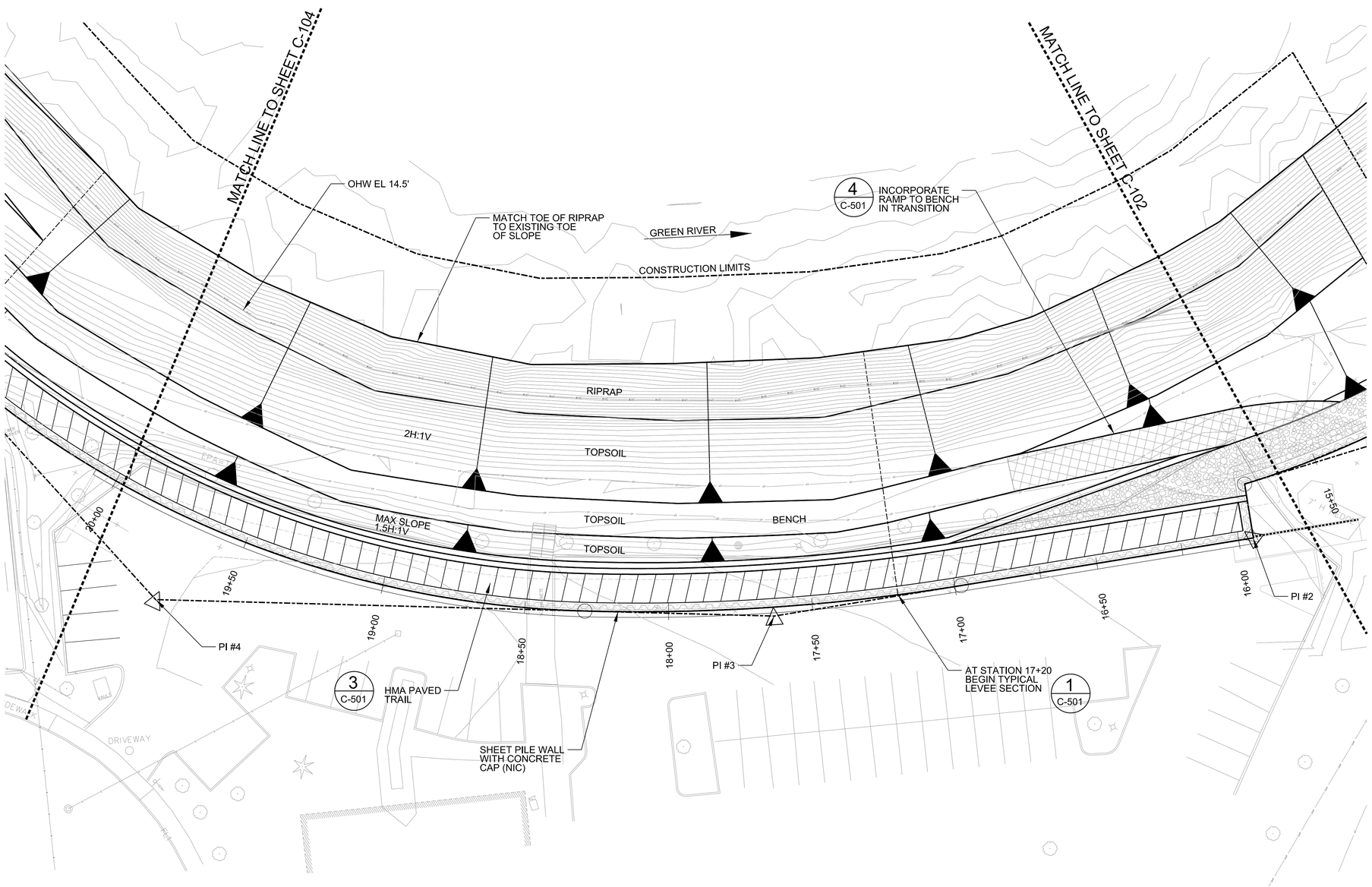

1 C-103 SITE PLAN 2
1" = 20'
0 20' 40'

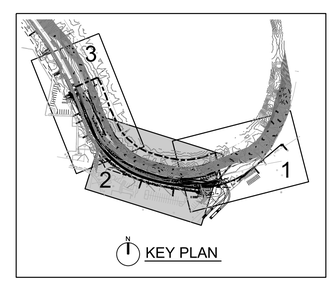

KEY PLAN

NOTES:

1. FOR LEGEND, ABBREVIATIONS, AND GENERAL NOTES, SEE SHEET C-001.
2. FOR LEVEE HORIZONTAL CONTROL, SEE SHEET C-105.
3. LEVEE TOP ELEVATION SHALL MATCH THE ELEVATION OF THE TOP OF THE CONCRETE CAP BEAM.
4. FOR TRANSITION SECTIONS, SEE SHEET C-301.
5. SEE SPECIFICATION 01 57 20 WATER QUALITY STANDARDS FOR TURBIDITY SAMPLING REQUIREMENTS

US Army Corps of Engineers®
SEATTLE DISTRICT

MARK	DESCRIPTION	DATE	APPR.	MARK	DESCRIPTION	DATE	APPR.

DESIGN FILE: I:\AECDesigns\FY15_PN448192_GRDL\Con_Docs\CAD_Sheets\Civil\PN448192_GRDL-C-103S02.dgn

DATE AND TIME PLOTTED: 5/1/2015

U.S. ARMY CORPS OF ENGINEERS
SEATTLE DISTRICT
SEATTLE, WASHINGTON

DESIGNED BY: M. PEELE
DWN BY: L. LEJON
CKD BY: L. FORD
SUBMITTED BY: L. WICKSTROM
PLOT DATE: 5/1/2015
PLOT TIME: 2:27:37 PM
SIZE: ANSI D
FILE NAME: NWS_USSF_WA_N_Site SHEET Seed_3D.dgn
DATE: 29 APRIL, 2015
SOLICITATION NUMBER: W-912DW-15-T-0003
FILE NUMBER: E-12-7-235

DESIMONE-BRISCOE SCHOOL LEVEE REHABILITATION
TUKWILA, WASHINGTON

SITE PLAN 2

SHEET IDENTIFICATION
C-103
SHEET 9 OF 17

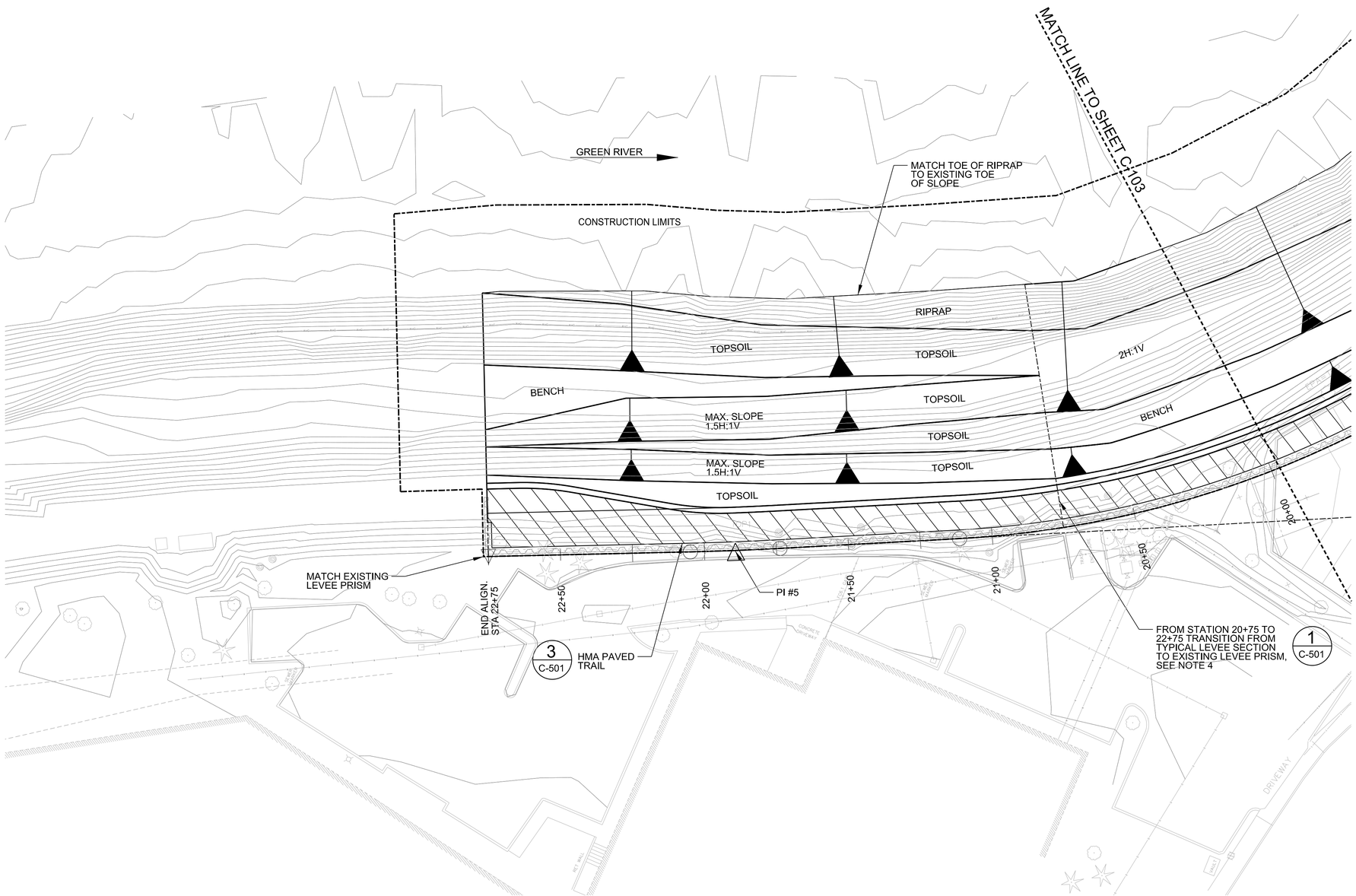

NOTES:

1. FOR LEGEND, ABBREVIATIONS, AND GENERAL NOTES, SEE SHEET C-001.

2. FOR LEVEE HORIZONTAL CONTROL, SEE SHEET C-105.

3. LEVEE TOP ELEVATION SHALL MATCH THE ELEVATION OF THE TOP OF THE CONCRETE CAP BEAM.

4. FOR TRANSION SECTIONS, SEE SHEET C-302.

5. SEE SPECIFICATION 01 57 20 WATER QUALITY STANDARDS FOR TURBIDITY SAMPLING REQUIREMENTS

1 C-104 SITE PLAN 3
1" = 20'
0 20' 40'

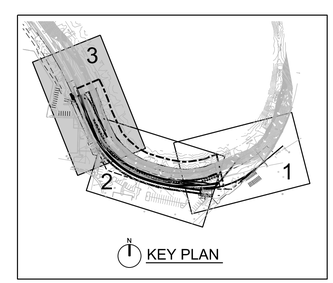

US Army Corps of Engineers®
SEATTLE DISTRICT

MARK	DESCRIPTION	DATE	APPR.	MARK	DESCRIPTION	DATE	APPR.

U.S. ARMY CORPS OF ENGINEERS
SEATTLE DISTRICT
SEATTLE, WASHINGTON

DESIGNED BY: M. PEELE
DWN BY: L. LEJON
CKD BY: L. FORD
SUBMITTED BY: L. WICKSTROM
PLOT DATE: 5/1/2015
SIZE: ANSI D
DATE: 29 APRIL, 2015
SOLICITATION NUMBER: W-912DW-15-T-0003
FILE NUMBER: E-C-2-205
PLOT TIME: 2:01:00 PM
FILE NAME: NWS_USSF_WA_N_Site SHEET Seed_3D.dgn

DESIMONE-BRISCOE SCHOOL LEVEE REHABILITATION
TUKWILA, WASHINGTON

SITE PLAN 3

SHEET IDENTIFICATION
C-104
SHEET 10 OF 17

DESIGN FILE: I:\AECDesigns\FY15_PN448192_GRDL\Con_Docs\CAD_Sheets\Civil\PN448192_GRDL-C-104S03.dgn

DATE AND TIME PLOTTED: 5/1/2015

HORIZONTAL CONTROL TABLE

START ALIGNMENT

STA 0+00.00
N 163,279.020
E 1,290,909.450
Length: 144.08
Direction: S 49°50'55" W

PC

STA 1+44.08
N 163,186.120
E 1,290,799.330

PI #1

STA 2+65.07
N 163,108.100
E 1,290,706.850
Radius: 328.00
Delta: 40°29'50" Right
Length: 231.83
DOC (Arc): 17°28'06"
Chord: 227.04 S 70°05'50" W
Tangent: 121.00 S 49°50'55" W

PT

STA 3+75.91
N 163,108.830
E 1,290,585.850
Length: 18.94
Direction: S 8°10'16" W

PI #2

STA 3+94.85
N 163,090.080
E 1,290,583.160
Length: 102.95
Direction: N 81°49'44" W

PC

STA 4+97.80
N 163,104.710
E 1,290,481.250

PI #3

STA 5+63.67
N 163,114.070
E 1,290,416.050
Radius: 698.00
Delta: 10°46'55" Right
Length: 131.35
DOC (Arc): 8°12'31"
Chord: 131.15 N 76°26'16" W
Tangent: 65.87 N 81°49'44" W

PCC

STA 6+29.15
N 163,135.470
E 1,290,353.760

PI #4

STA 7+78.41
N 163,183.940
E 1,290,212.590
Radius: 350.00
Delta: 46°11'32" Right
Length: 282.17
DOC (Arc): 16°22'13"
Chord: 274.59 N 47°57'03" W
Tangent: 149.26 N 71°02'49" W

PT

STA 9+11.33
N 163,319.380
E 1,290,149.850
Length: 62.46
Direction: N 24°51'17" W

PC

STA 9+73.79
N 163,376.060
E 1,290,123.600

PI #5

STA 9+89.35
N 163,390.180
E 1,290,117.060
Radius: 1000.00
Delta: 1°47'00" Right
Length: 31.12
DOC (Arc): 5°43'46"
Chord: 31.12 N 23°57'47" W
Tangent: 15.56 N 24°51'17" W

PT

STA 10+04.91
N 163,404.500
E 1,290,110.960
Length: 70.11
Direction: N 23°04'17" W

END OF ALIGNMENT

STA 10+75.02
N 163,468.995
E 1,290,083.485

US Army Corps of Engineers®
SEATTLE DISTRICT

MARK	DESCRIPTION	DATE	APPR.	MARK	DESCRIPTION	DATE	APPR.

U.S. ARMY CORPS OF ENGINEERS
SEATTLE DISTRICT
SEATTLE, WASHINGTON

DESIGNED BY: M. PEELE
DWN BY: L. LEJON
CKD BY: L. FORD
SUBMITTED BY: L. WICKSTROM
PLOT DATE: 5/1/2015
PLOT TIME: 2:27:42 PM
SIZE: ANSI D
FILE NAME: NWS_USSF_WA_N_Site SHEET Seed_3D.dgn
DATE: 29 APRIL, 2015
SOLICITATION NUMBER: W-912DW-15-T-0003
FILE NUMBER: E-12-7-235

DESIMONE-BRISCOE SCHOOL LEVEE REHABILITATION
TUKWILA, WASHINGTON

HORIZONTAL CONTROL TABLE

SHEET IDENTIFICATION
C-105
SHEET 0 OF 0

DESIGN FILE: I:\AECDesigns\FY15_PN448192_GRDL\Con_Docs\CAD_Sheets\Civil\PN448192_GRDL-C-105S04.dgn

DATE AND TIME PLOTTED: 5/1/2015

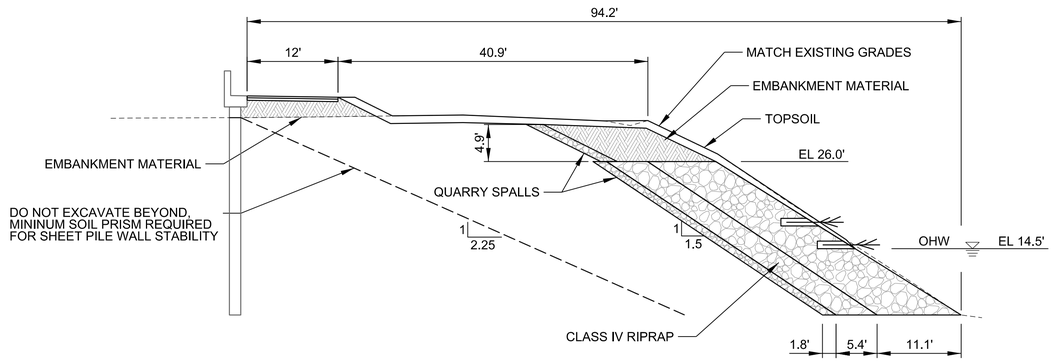

1 C-102 LEVEE CROSS-SECTION AT STATION 15+00
1" = 10'
0 10' 20'

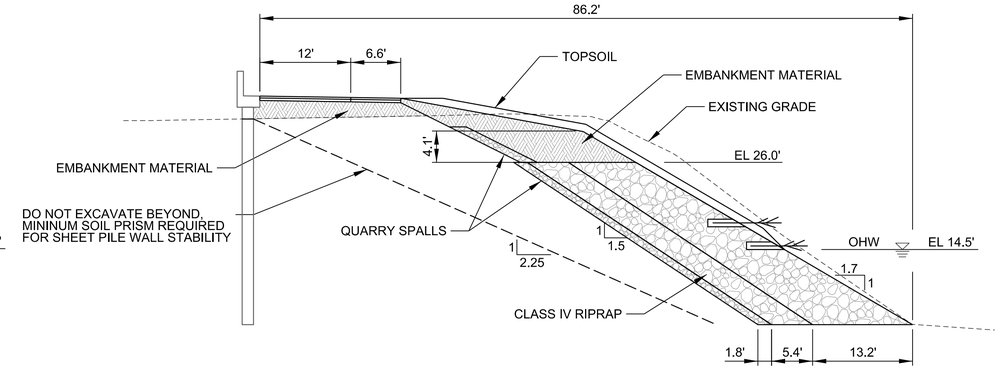

2 C-102 LEVEE CROSS-SECTION AT STATION 15+50
1" = 10'
0 10' 20'

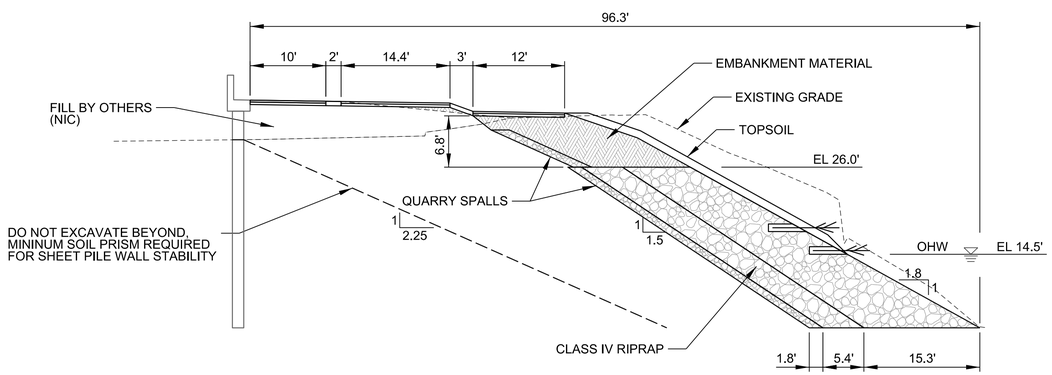

3 C-103 LEVEE CROSS-SECTION AT STATION 16+20
1" = 10'
0 10' 20'

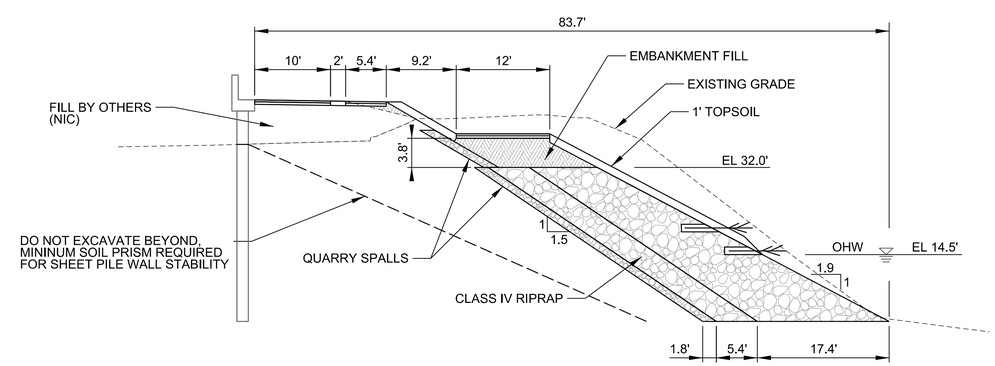

4 C-103 LEVEE CROSS-SECTION AT STATION 16+70
1" = 10'
0 10' 20'

NOTES:

1. FOR LEGEND, ABBREVIATIONS, AND GENERAL NOTES, SEE SHEET C-001.

2. FOR ADDITIONAL CROSS-SECTION ANNOTATION AND DIMENSIONS, SEE TYPICAL LEVEE CROSS-SECTION ON SHEET C-501

US Army Corps of Engineers®
SEATTLE DISTRICT

MARK	DESCRIPTION	DATE	APPR.

MARK	DESCRIPTION	DATE	APPR.

U.S. ARMY CORPS OF ENGINEERS
SEATTLE DISTRICT
SEATTLE, WASHINGTON

DESIGNED BY: REFERELE
DWN BY: EBELSON
CKD BY: L. FORD
SUBMITTED BY: L. WICKSTROM
PLOT DATE: 5/1/2015
SIZE: ANSI D
PLOT TIME: 2:27:53 PM
FILE NAME: NWS_USSF_WA_N_Site SHEET Seed_3D.dgn
DATE: 29 APRIL, 2015
SOLICITATION NUMBER: W-912DW-15-T-0003
FILE NUMBER: E-12-7-235

DESIMONE-BRISCOE SCHOOL LEVEE REHABILITATION
TUKWILA, WASHINGTON

CROSS-SECTIONS 1

SHEET IDENTIFICATION
C-301
SHEET 12 OF 17

DESIGN FILE: I:\AECDesigns\FY15_PN448192_GRDL\Con_Docs\CAD_Sheets\Civil\PN448192_GRDL-C-301CS1.dgn

DATE AND TIME PLOTTED: 5/1/2015

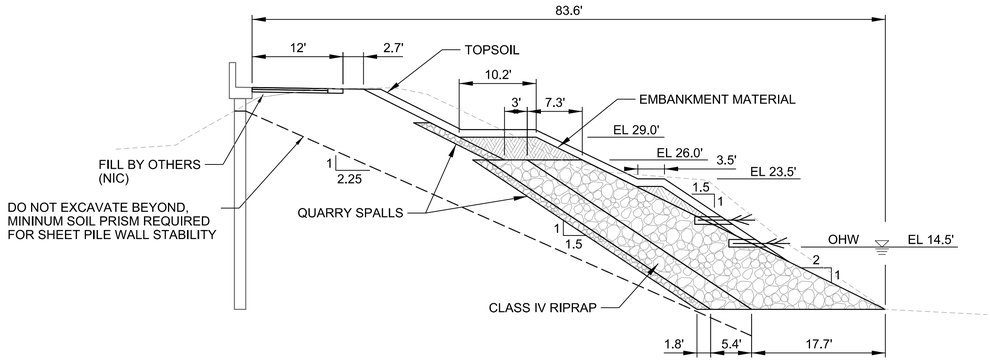

1 C-104 LEVEE CROSS-SECTION AT STATION 21+25
1" = 10'
0 10' 20'

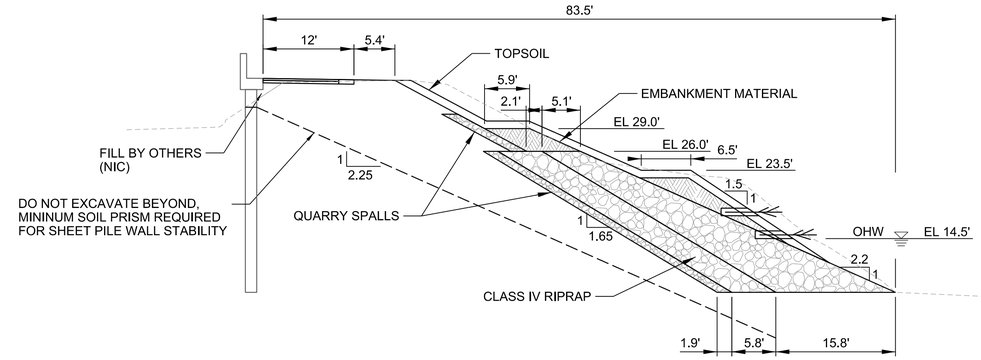

2 C-104 LEVEE CROSS-SECTION AT STATION 21+75
1" = 10'
0 10' 20'

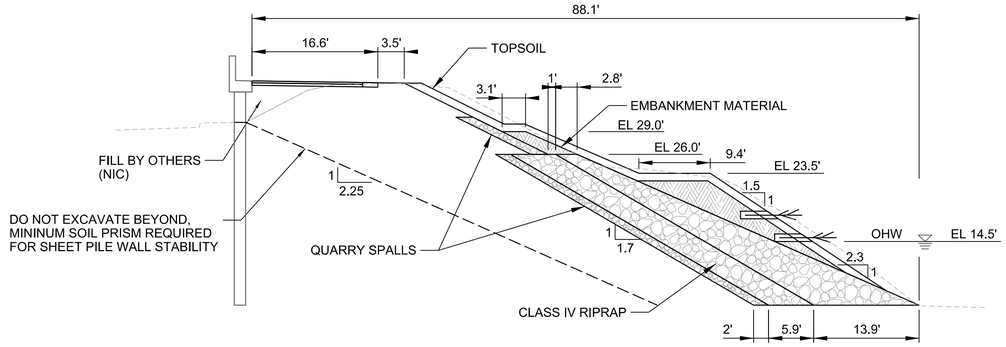

3 C-104 LEVEE CROSS-SECTION AT STATION 22+25
1" = 10'
0 10' 20'

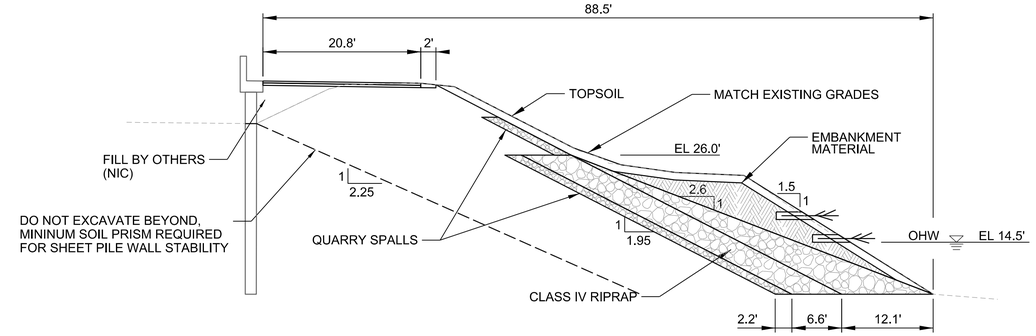

4 C-104 LEVEE CROSS-SECTION AT STATION 22+75
1" = 10'
0 10' 20'

NOTES:

1. FOR LEGEND, ABBREVIATIONS, AND GENERAL NOTES, SEE SHEET C-001.

2. FOR ADDITIONAL CROSS-SECTION ANNOTATION AND DIMENSIONS, SEE TYPICAL LEVEE CROSS-SECTION ON SHEET C-501

US Army Corps of Engineers®
SEATTLE DISTRICT

MARK	DESCRIPTION	DATE	APPR.

MARK	DESCRIPTION	DATE	APPR.

U.S. ARMY CORPS OF ENGINEERS
SEATTLE DISTRICT
SEATTLE, WASHINGTON

DESIGNED BY: R. PEBELLE
DWN BY: E. BELLON
CKD BY: L. FORD
SUBMITTED BY: L. WICKSTROM
PLOT DATE: 5/1/2015
PLOT TIME: 2:27:57 PM
SIZE: ANSI D
FILE NAME: NWS_USSF_WA_N_Site SHEET Seed_3D.dgn
DATE: 29 APRIL, 2015
SOLICITATION NUMBER: W-912DW-15-T-0003
FILE NUMBER: E-12-7-235

DESIMONE-BRISCOE SCHOOL LEVEE REHABILITATION
TUKWILA, WASHINGTON

CROSS-SECTIONS 2

SHEET IDENTIFICATION
C-302
SHEET 13 OF 17

DESIGN FILE: I:\AECDesigns\FY15_PN448192_GRDL\Con_Docs\CAD_Sheets\Civil\PN448192_GRDL-C-302CS2.dgn

DATE AND TIME PLOTTED: 5/1/2015

NOTES:

1. CLEAR ALL TREES, TIMBER, BRUSH, VEGETATION, LOOSE STONE, ABANDONED STRUCTURES, FENCING, AND DEBRIS. REMOVE ALL STUMPS, ROOTS OVER 1.5 INCHES IN DIAMETER, BURIED LOGS, OLD PILING, OLD PAVING, DRAINS, AND OTHER OBJECTIONABLE MATERIAL TO A DEPTH OF 3 FEET BELOW NATURAL GROUND SURFACE AND BACKFILL IN ACCORDANCE WITH EM 1110-2-1913.

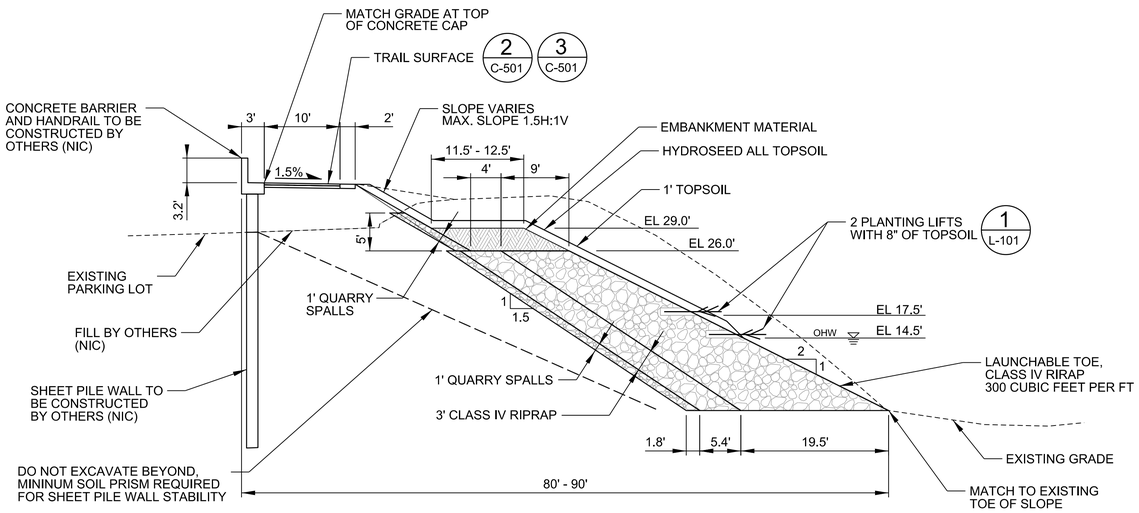

1 TYPICAL LEVEE CROSS-SECTION
1" = 10'
0 10' 20'

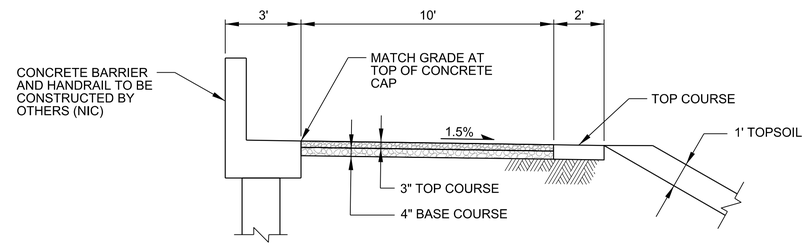

2 TYPICAL GRAVEL TRAIL SECTION
1" = 3'
0 3' 6'

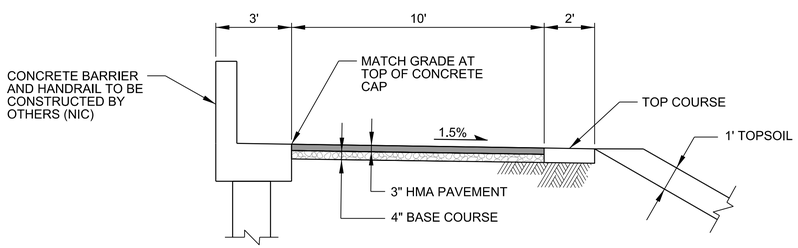

3 TYPICAL PAVED TRAIL SECTION
1" = 3'
0 3' 6'

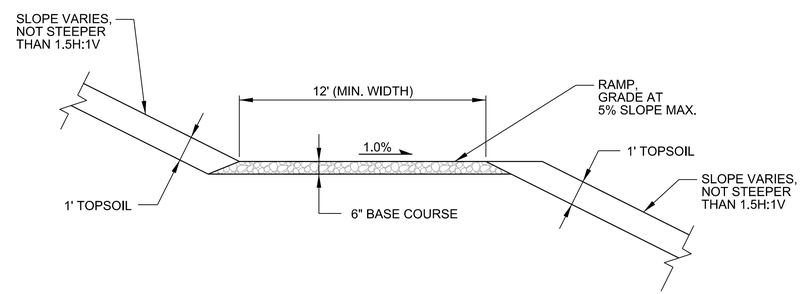

4 TYPICAL RAMP SECTION
1" = 3'
0 3' 6'

US Army Corps of Engineers®
SEATTLE DISTRICT

MARK	DESCRIPTION	DATE	APPR.

MARK	DESCRIPTION	DATE	APPR.

U.S. ARMY CORPS OF ENGINEERS
SEATTLE DISTRICT
SEATTLE, WASHINGTON

DESIGNED BY: M. PEELE
DWN BY: L. LEJON
CKD BY: L. FORD
SUBMITTED BY: L. WICKSTROM
PLOT DATE: 5/1/2015
PLOT TIME: 2:28:01 PM
SIZE: ANSI D
FILE NAME: NWS_USSF_WA_N_Site SHEET Seed_3D.dgn
DATE: 29 APRIL, 2015
SOLICITATION NUMBER: W-912DW-15-T-0003
FILE NUMBER: E-12-7-235

DESIMONE-BRISCOE SCHOOL LEVEE REHABILITATION
TUKWILA, WASHINGTON

TYPICAL CROSS-SECTIONS

SHEET IDENTIFICATION
C-501
SHEET 14 OF 17

DESIGN FILE: I:\AECDesigns\FY15_PN448192_GRDL\Con_Docs\CAD_Sheets\Civil\PN448192_GRDL-C-501DET.dgn

DATE AND TIME PLOTTED: 5/1/2015

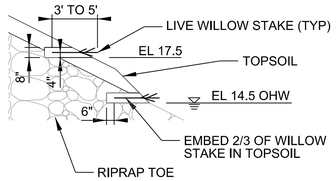

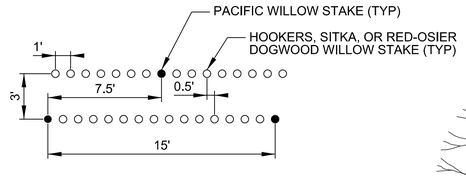

1 / L-101 WILLOW PLANTING
NOT TO SCALE

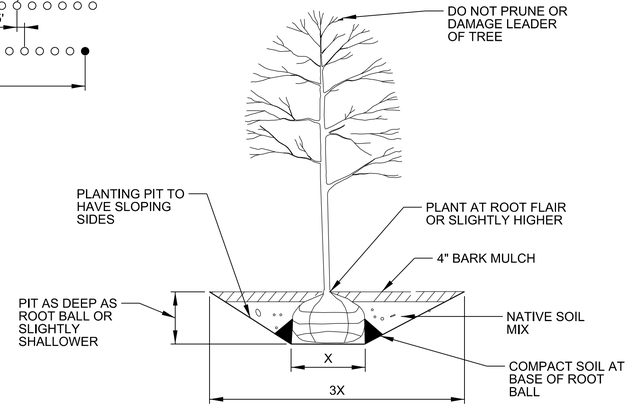

2 / L-101 DECIDUOUS TREE PLANTING
NOT TO SCALE

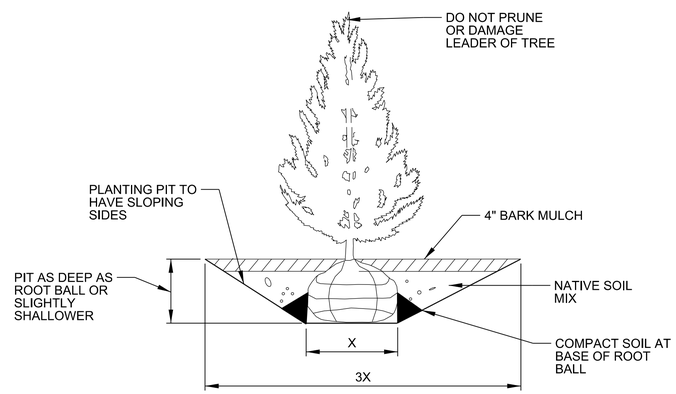

3 / L-101 EVERGREEN TREE PLANTING
NOT TO SCALE

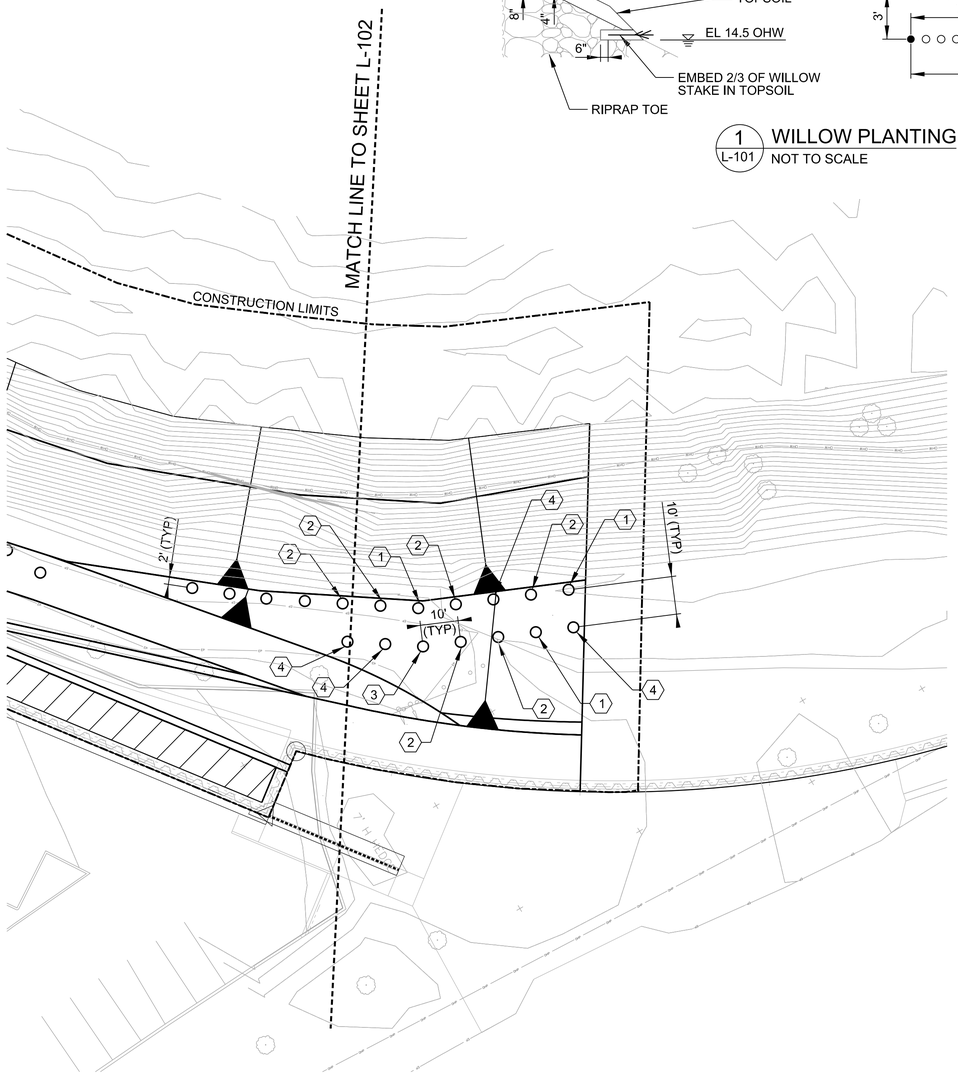

N

1 / C-102 LANDSCAPE PLAN 1
1" = 20'
0 20' 40'

TREE / SHRUB TABLE

NO.	NAME	NAME	MAX. HEIGHT	TYPE	NO. OF TREES/SHRUB
1	BIGLEAF MAPLE	ACER MACROPHYLLUM	100'	1 GALLON	21
2	DOUGLAS-FIR	PSEUDOTSUGA MENZIESII	250'	1 GALLON	7
3	CASCARA	RHAMNUS PURSHIANA	30'	1 GALLON	21
4	BITTER CHERRY	PRUNUS EMARGINATA	30'	1 GALLON	26
5	SHORE PINE	PINUS CONTORTA	50'	1 GALLON	14
6	PACIFIC CRAB APPLE	MALUS FUSCA	40'	1 GALLON	4
7	OREGON ASH	FRAXINUM LATIFOLIA	70'	1 GALLON	4
	PACIFIC WILLOW	S. LASIANDRA		3' LIVE STAKE	103
	HOOKERS WILLOW	SALIX HOOKERIANA		3' LIVE STAKE	483
	SITKA WILLOW	S. SITCHENSIS		3' LIVE STAKE	482
	RED-OSIER DOGWOOD	CORNUS SERICEA		3' LIVE STAKE	482
	WILLOW				

PLANTING NOTES.

1. FOR LEGEND, ABBREVIATIONS, AND GENERAL NOTES, SEE SHEET C-001.

2. PLANT MATERIAL SHALL BE HEALTHY, DISEASE FREE AND IN A VIGOROUS GROWING STATE UPON DELIVERY TO SITE. PLANT MATERIAL FAILING TO MEET THESE CRITERIA SHALL BE REJECTED.

3. CONTAINER PLANTS SHALL HAVE GROWN THEREIN A MINIMUM OF 6 MONTHS AND A MAXIMUM OF 2 YEARS, WITH ROOTS FILLING THE CONTAINERS, BUT NOT SHOWING EVIDENCE OF BEING OR HAVING ROOT BOUND.

4. 4" OF BARK MULCH WILL BE PLACED AFTER PLANTING.

5. TREES SHALL BE WATERED-IN AT THE TIME OF PLANTING.

6. CONTRACTOR SHALL ENSURE 100% SURVIVAL OF ALL TREES DURING THE FIRST YEAR AND AT THE POINT OF ONE YEAR AFTER INITIAL PLANTING.

7. PLANTING OF CONTAINER STOCK SHALL BE ACCOMPLISHED DURING THE PERIOD 1 SEPTEMBER THROUGH 30 MARCH.

8. STAKES SHALL BE CUT WHILE DORMANT AND BETWEEN 3' TO 5' IN LENGTH WITH AN ANGLE CUT (45 DEGREES) BASAL END OF 0.5" TO 1.5" IN DIAMTER AND PERPENDICULAR CUT JUST ABOVE A NODE (BUD) AT THE TOP.

9. STAKES WILL BE STRIPPED OF ALL STEMS AND LEAVES TAKING CARE TO MINIMIZE SCARRING OR BRUISING.

10. STAKES WILL BE INSTALLED ALONG THE LEVEE SLOPE WITH 2/3 OF EACH STAKE EMBEDDED INTO THE SLOPE WITH AT LEAST TWO LATERAL BUDS ABOVE GROUND AFTER PLANTING.

11. PLANT STAKES ALONG 12" CENTERS USING TRANGULAR SPACING TO FORM TWO ROWS ALONG THE BANK WITH THE FIRST ROW ESTABLISHED STARTING AT ORDINARY HIGH WATER MARK (OHWM).

12. LIGHTLY SCARIFY ROOTBALL TO LOOSEN ROOTS PRIOR TO PLANTING.

13. FEATHER MULCH TO MAINTAIN 6" CLEARANCE BETWEEN MULCH AND STEM OF SHRUB.

14. NO RECYCLED ORGANIC MULCH IN BIORRETENTION AREAS. KEEP MULCH AWAY FROM FOLIAGE.

IRRIGATION NOTES.

1. THE CONTRATOR SHALL DESIGN AND PROVIDE AN IRRIGATION SYSTEM ABLE TO PROVIDE SUPPLEMENTAL WATER WEEKLY TO ALL INSTALLED SHRUBS AND TREES WHENEVER THE PRECEDING WEEKS RAINFALL TOTAL DOES NOT EXCEED 1" BETWEEN MAY 1 AND SEPTEMBER 30, AND AT OTHER TIMES AS CLIMATIC CONDITIONS REQUIRE. IRRIGATION SYSTEM SHALL CONSIST OF GRAVITY-FED CISTERNS AND A BUBBLER-IRRIGATION SYSTEM THAT CAN BE REFILLED QUICKLY TO MINIMIZE IMPACTS TO TRAIL USERS. CISTERN SIZE SHALL BE OPTIMIZED FOR THE SUPPLY TRUCK, SECURED TO PREVENT MOVEMENT BY WIND OR VANDALS, AND SHALL DELIVER A MINIMUM OF 1-GALLON OF WATER TO EACH PLANT PER FILLING. THE CISTERN MAY BE FILLED AS MANY TIMES DURING EACH WATERING AS NECESSARY TO PROVIDE ALL PLANTS WITH SUFFICIENT WATER TO MAINTAIN A HEALTHY, VIGOROUS CONDITION. CISTERN AND IRRIGATION LINES SHALL BE LOCATED ON THE WATERWARD SIDE OF THE ASPHALT TRAIL AND SHOULD NOT ENCROACH ON THE TRAIL. IRRIGATION SYSTEM SHOULD BE DESIGN FOR A LIFE SPAN OF 5 YEARS.

2. THE CONTRACTOR SHALL SUBMIT AN IRRIGATION PLAN FOR GOVERNMENT APPROVAL PRIOR TO INSTALLATION OF THE SYSTEM.

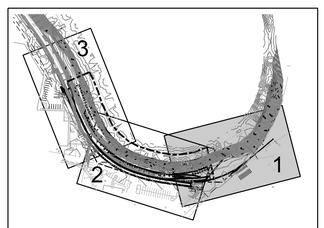

N KEY PLAN

US Army Corps of Engineers®
SEATTLE DISTRICT

MARK	DESCRIPTION	DATE	APPR.	MARK	DESCRIPTION	DATE	APPR.

U.S. ARMY CORPS OF ENGINEERS
SEATTLE DISTRICT
SEATTLE, WASHINGTON

DESIGNED BY: M. PEELE
DWN BY: L. LEJON
CKD BY: L. FORD
SUBMITTED BY: L. WICKSTROM
PLOT DATE: 2/20/2015
PLOT TIME: 2:00 PM PM
DATE: 29 APRIL, 2015
SOLICITATION NUMBER: W-912DW-15-T-0003
FILE NUMBER: E-C2-C-205
SIZE: ANSI D
FILE NAME: NWS_USSF_WA_N_Site SHEET Seed_3D.dgn

DESIMONE-BRISCOE SCHOOL LEVEE REHABILITATION
TUKWILA, WASHINGTON

PLANTING PLAN 1

SHEET IDENTIFICATION
L-101
SHEET 15 OF 17

DESIGN FILE: I:\AECDesigns\FY15_PN448192_GRDL\Con_Docs\CAD_Sheets\Civil\PN448192_GRDL-L-101S01.dgn

DATE AND TIME PLOTTED: 5/1/2015

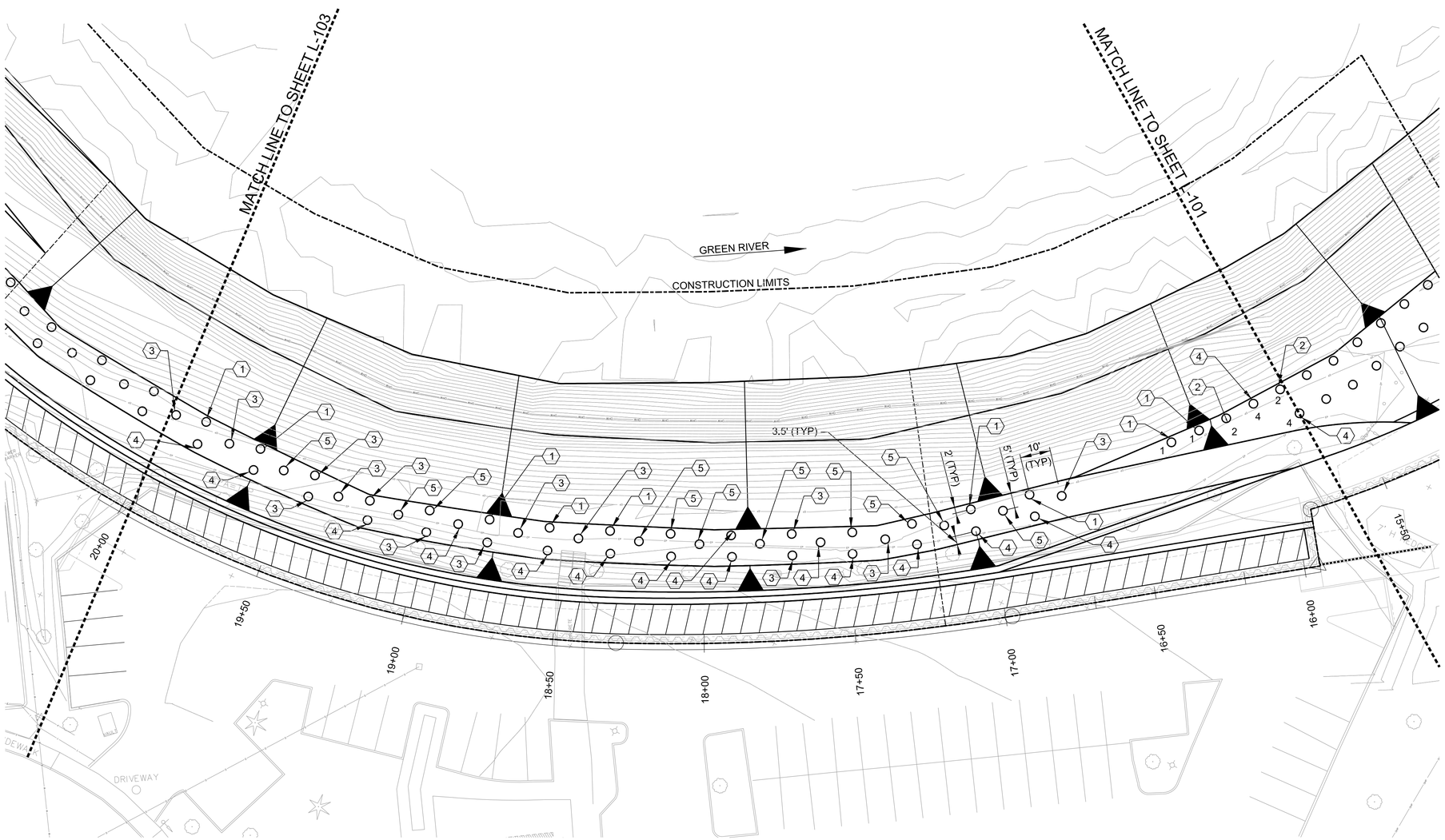

NOTES:

1. FOR LEGEND, ABBREVIATIONS, AND GENERAL NOTES, SEE SHEET C-001.

2. FOR PLANTING DETAILS AND NOTES, SEE SHEET L-101.

1 L-102 LANDSCAPE PLAN 2
1" = 20'
0 20' 40'

TREE / SHRUB TABLE

NO.	NAME	NAME	MAX. HEIGHT	TYPE	NO. OF TREES/SHRUB
1	BIGLEAF MAPLE	ACER MACROPHYLLUM	100'	1 GALLON	21
2	DOUGLAS-FIR	PSEUDOTSUGA MENZIESII	250'	1 GALLON	7
3	CASCARA	RHAMNUS PURSHIANA	30'	1 GALLON	21
4	BITTER CHERRY	PRUNUS EMARGINATA	30'	1 GALLON	26
5	SHORE PINE	PINUS CONTORTA	50'	1 GALLON	14
6	PACIFIC CRAB APPLE	MALUS FUSCA	40'	1 GALLON	4
7	OREGON ASH	FRAXINUM LATIFOLIA	70'	1 GALLON	4
	PACIFIC WILLOW	S. LASIANDRA		3' LIVE STAKE	103
	HOOKERS WILLOW	SALIX HOOKERIANA		3' LIVE STAKE	483
	SITKA WILLOW	S. SITCHENSIS		3' LIVE STAKE	482
	RED-OSIER DOGWOOD WILLOW	CORNUS SERICEA		3' LIVE STAKE	482

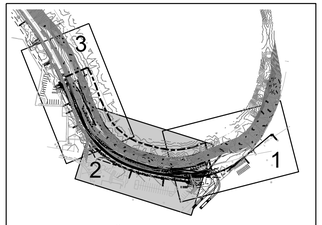

KEY PLAN

US Army Corps of Engineers®
SEATTLE DISTRICT

MARK	DESCRIPTION	DATE	APPR.

MARK	DESCRIPTION	DATE	APPR.

U.S. ARMY CORPS OF ENGINEERS
SEATTLE DISTRICT
SEATTLE, WASHINGTON

DESIGNED BY: M. PEELE
DWN BY: L. LEJON
CKD BY: L. FORD
SUBMITTED BY: L. WICKSTROM
PLOT DATE: 5/1/2015
PLOT TIME: 2:28:07 PM
SIZE: ANSI D
FILE NAME: NWS_USSF_WA_N_Site SHEET Seed_3D.dgn
DATE: 29 APRIL, 2015
SOLICITATION NUMBER: W-912DW-15-T-0003
FILE NUMBER: E-12-7-235

DESIMONE-BRISCOE SCHOOL LEVEE REHABILITATION
TUKWILA, WASHINGTON

PLANTING PLAN 2

SHEET IDENTIFICATION
L-102
SHEET 16 OF 17

DESIGN FILE: I:\AECDesigns\FY15_PN448192_GRDL\Con_Docs\CAD_Sheets\Civil\PN448192_GRDL-L-102S02.dgn

DATE AND TIME PLOTTED: 5/1/2015

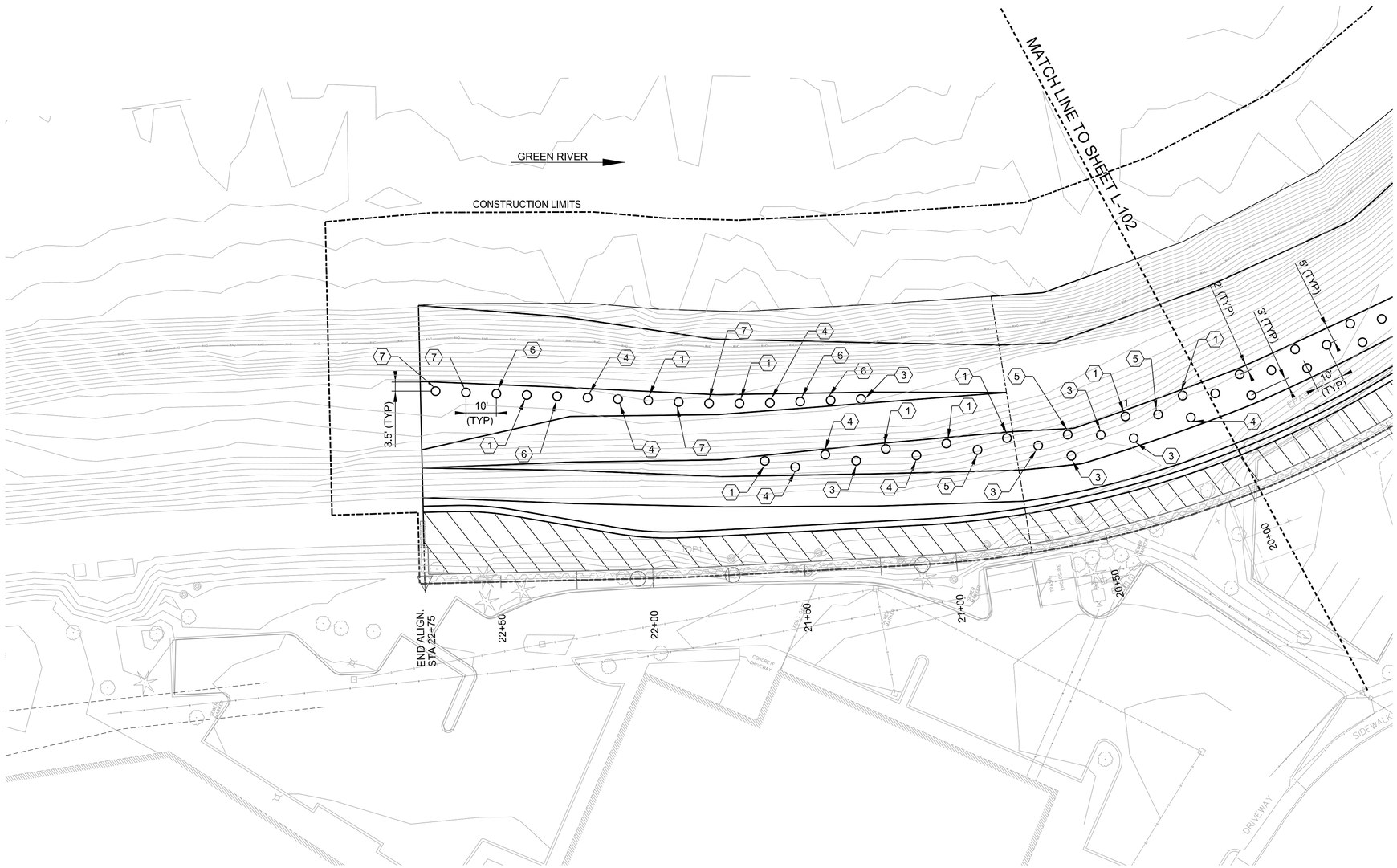

NOTES:

1. FOR LEGEND, ABBREVIATIONS, AND GENERAL NOTES, SEE SHEET C-001.

2. FOR PLANTING DETAILS AND NOTES, SEE SHEET L-101.

TREE / SHRUB TABLE

NO.	NAME	NAME	MAX. HEIGHT	TYPE	NO. OF TREES/SHRUB
1	BIGLEAF MAPLE	ACER MACROPHYLLUM	100'	1 GALLON	21
2	DOUGLAS-FIR	PSEUDOTSUGA MENZIESII	250'	1 GALLON	7
3	CASCARA	RHAMNUS PURSHIANA	30'	1 GALLON	21
4	BITTER CHERRY	PRUNUS EMARGINATA	30'	1 GALLON	26
5	SHORE PINE	PINUS CONTORTA	50'	1 GALLON	14
6	PACIFIC CRAB APPLE	MALUS FUSCA	40'	1 GALLON	4
7	OREGON ASH	FRAXINUM LATIFOLIA	70'	1 GALLON	4
	PACIFIC WILLOW	S. LASIANDRA		3' LIVE STAKE	103
	HOOKERS WILLOW	SALIX HOOKERIANA		3' LIVE STAKE	483
	SITKA WILLOW	S. SITCHENSIS		3' LIVE STAKE	482
	RED-OSIER DOGWOOD	CORNUS SERICEA		3' LIVE STAKE	482
	WILLOW				

N

1 / L-103 LANDSCAPE PLAN 3

1" = 20'

0 20' 40'

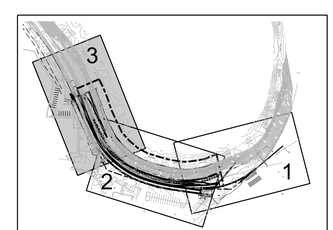

US Army Corps of Engineers®
SEATTLE DISTRICT

MARK	DESCRIPTION	DATE	APPR.	MARK	DESCRIPTION	DATE	APPR.

U.S. ARMY CORPS OF ENGINEERS
SEATTLE DISTRICT
SEATTLE, WASHINGTON

DESIGNED BY: M. PEELE
DWN BY: L. LEJON
CKD BY: L. FORD
SUBMITTED BY: L. WICKSTROM
PLOT DATE: 5/1/2015
SIZE: ANSI D
DATE: 29 APRIL, 2015
SOLICITATION NUMBER: W-912DW-15-T-0003
PLOT TIME: 2:01:00 PM
FILE NUMBER: E-C2-C-025
FILE NAME: NWS_USSF_WA_N_Site SHEET Seed_3D.dgn

DESIMONE-BRISCOE SCHOOL LEVEE REHABILITATION
TUKWILA, WASHINGTON

PLANTING PLAN 3

SHEET IDENTIFICATION
L-103
SHEET 17 OF 17

DESIGN FILE: I:\AECDesigns\FY15_PN448192_GRDL\Con_Docs\CAD_Sheets\Civil\PN448192_GRDL-L-103S03.dgn

DATE AND TIME PLOTTED: 5/1/2015