VICINITY MAP

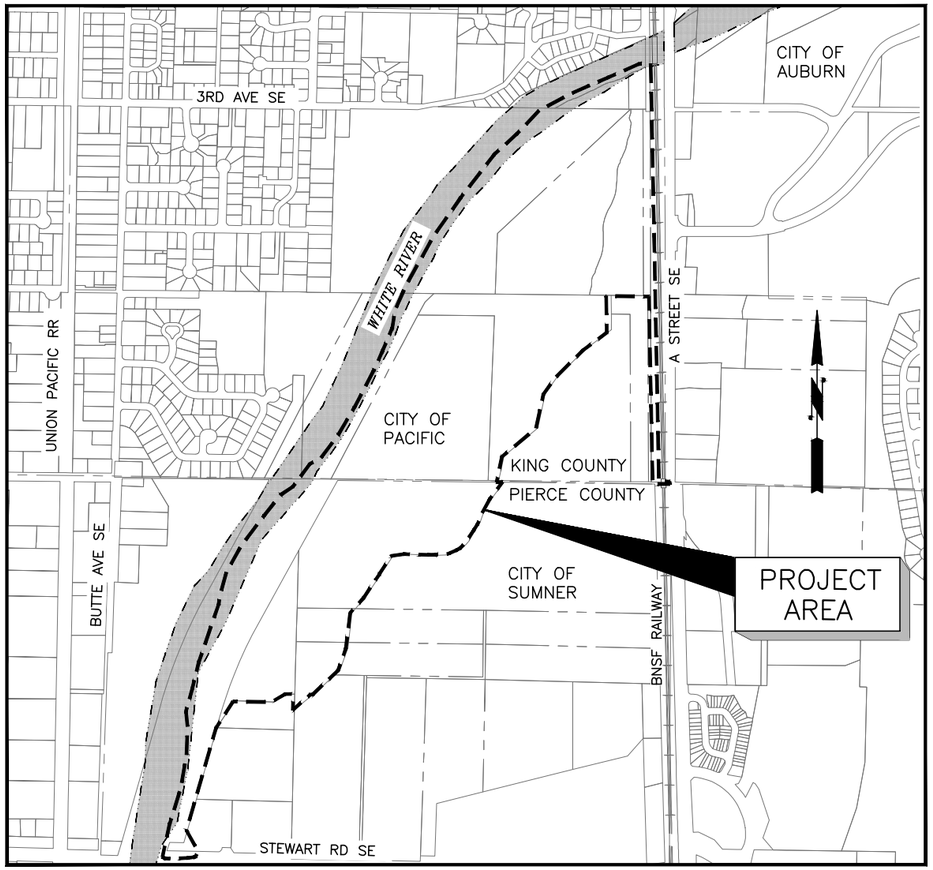

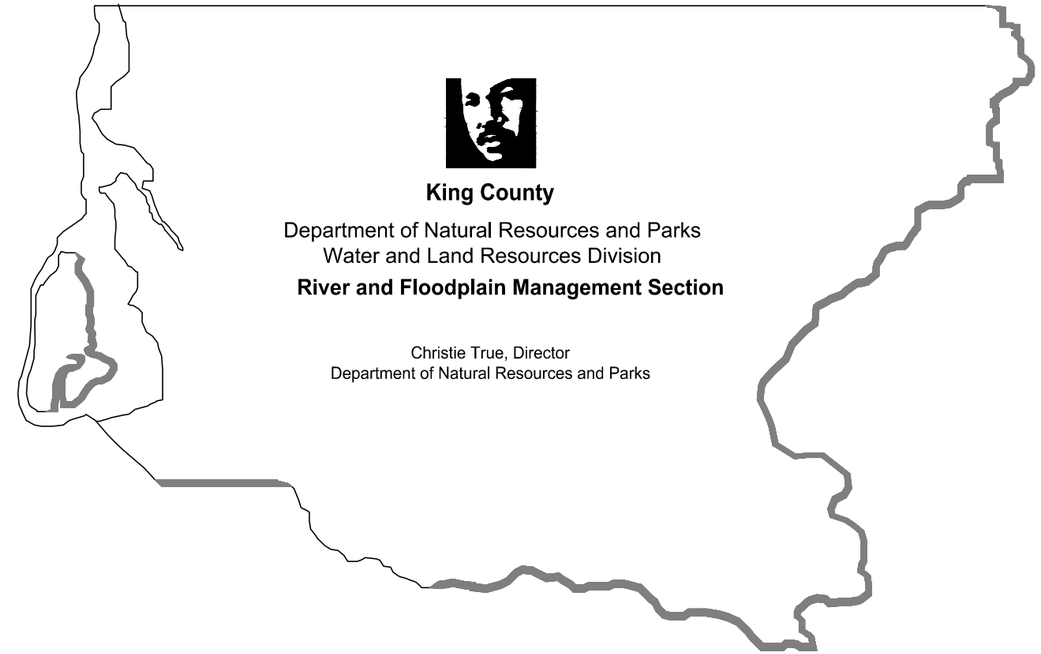

Countyline Levee Setback

White River, River Mile 5.00-6.33

INDEX

SHEET	DRAWING	DESCRIPTION
1	GN1	COVER SHEET
2	GN2	LEGEND AND ABBREVIATIONS
3	GN3	SITE PLAN AND KEY SHEET
4	GN4	EXISTING CONDITIONS AND SURVEY CONTROL
5	GN5	EXISTING UTILITIES
6–17	EC1–EC12	TESC AND SITE CLEARING PLAN
18	ED1	TESC DETAILS
19–21	ED2–ED4	TEMPORARY ACCESS FOR ELJS 1–8
22–27	SB1–SB6	SETBACK LEVEE AND ENGINEERED LOG STRUCTURES
28–32	SD1–SD5	SETBACK LEVEE CROSS SECTIONS
33–38	LR1–LR6	LEVEE EXCAVATION PLAN AND PROFILE
39–42	LD1–LD4	LEVEE EXCAVATION CROSS SECTIONS
43	WD1	LARGE APEX ELJ PLAN AND SECTION
44	WD2	LARGE APEX ELJ LAYERING PLAN
45	WD3	SMALL APEX ELJ PLAN AND SECTION
46	WD4	SMALL APEX ELJ LAYERING PLAN
47	WD5	BANK DEFLECTOR ELJ PLAN AND SECTION
48	WD6	BANK DEFLECTOR ELJ LAYERING PLAN
49	WD7	BIOREVETMENT PLAN AND SECTION
50	WD8	BIOREVETMENT LAYERING PLAN
51	WD9	BIOREVETMENT CONTROL POINT TABLE
52	WD10	FLOODPLAIN ROUGHENING AND HUMMOCK DETAILS
53	CV1	CHECK VALVE INSTALLATION DETAIL
54–58	TS1–TS5	TOPSOIL AND LEVEE TOE ROCK SURFACING

CALL 2 WORKING DAYS
BEFORE YOU DIG
1–800–424–5555
(UNDERGROUND UTILITY LOCATIONS ARE APPROX.)

FIELD BOOK:
SURVEYED:
SURVEY BASE MAP:
CHECKED:

NUM.	REVISION	BY	DATE

APPROVED:	JEANNE STYPULA, PE	3–2016
PROJECT MANAGER:	CHRIS BRUMMER, PE	3–2016
DESIGNED:	CHRIS BRUMMER, PE	3–2016
ECOLOGIST:	STEPHANIE SHELTON	3–2016
DESIGN ENTERED:	HUE ONG	3–2016

SRFB # RCO 087–1910C

PROJECT No. 1112049 (FL9001)

CHRISTOPHER JON BRUMMER, STATE OF WASHINGTON, 40695, REGISTERED PROFESSIONAL ENGINEER, 3/23/16

JEANNE MARIE STYPULA, STATE OF WASHINGTON, 26602, REGISTERED PROFESSIONAL ENGINEER, 3/24/2016

King County
Department of Natural Resources and Parks
Water and Land Resources Division
River and Floodplain Management Section
Christie True, Director

COUNTYLINE LEVEE SETBACK

COVER SHEET

SHEET 1 OF 58 SHEETS

GN1

LINETYPES

EXIST.	DESCRIPTION
SURFACE FEATURES:	
	BUILDING LINE (EXISTING)
	CREEK/DITCH CENTERLINE (EXIST.)
	CURB/PAVEMENT/SIDEWALK (EX)
X X	FENCE (EXISTING)
	GUARDRAIL (EXISTING)
	EDGE OF OPEN WATER (APPROX.)
	INFILTRATION AREAS
WB WB	WETLAND BOUNDARY
	RAILROAD
	RIVERBANK/SHORELINE
OHW OHW	ORDINARY HIGH WATER
	STREAM
	BEAVER DAM

SURVEY:

	CENTERLINE (EXISTING)
	MINOR CONTOUR (EXIST.)
70	MAJOR CONTOUR (EXIST.)
PL	PROPERTY LINE
	RIGHT-OF-WAY (CURRENT)
	STATE/COUNTY/CORPORATE LIMIT

UTILITIES (EXISTING):

TV	CABLE TELEVISION
FM	FORCE MAIN
G	GAS
P	POWER (AERIAL)
P ABAN	ABANDONED POWER LINE
UG-P	POWER (BURIED)
SS	SANITARY SEWER
SD	STORM DRAINAGE
T	TELEPHONE (AERIAL)
UG-T	TELEPHONE (BURIED)
W	WATER
6"G	GAS
12"CMP	STORM DRAIN
FO	FIBER OPTIC (BURIED)
W ABAN	ABANDONED WATER LINE

SOURCES OF TOPOGRAPHIC DATA

TOPOGRAPHY PREPARED BY PARAMETRIX AND BASED ON THE FOLLOWING DATUMS AND SURVEY CAMPAIGNS:

DATUMS:
HORIZONTAL– NAD 83/2011, WASHINGTON STATE PLANE COORDINATE SYSTEM NORTH ZONE. DERIVED BY USING WASHINGTON STATE REFERENCE NETWORK (WSRN)

CONTROL POINTS	# 9114	#9113
	N. 95759.82	N. 97059.67
	E. 1291357.78	E. 1292444.02
	EL. 72.44	EL. 79.09
	SET REBAR AND CAP STAMPED "PMX CONTROL"	SET REBAR AND CAP STAMPED "PMX CONTROL"

VERTICAL– NAVD 88 PER WSRN CONTROL: (SEE CONTROL POINTS 9114,9113)

BASIS OF BEARING:
HELD N39°53'03"E 1693.97'
BETWEEN LOCATED CONTROL POINTS LISTED ABOVE

THE EXISTING TOPOGRAPHY WAS COMPILED FROM THE FOLLOWING SURVEYS:
2011 PARTIAL WETLAND BATHYMETRIC SURVEY (NHC)
2012 TOPOGRAPHIC SURVEY OF UPLAND EAST OF WETLAND (PARAMETRIX)
2014–2015 CROSS SECTION SURVEY IN WHITE RIVER (PGS)
2015 LIDAR ACQUISITION (QUANTUM SPATIAL)
2015 PARTIAL WETLAND BATHYMETRIC SURVEY (PARAMETRIX)

LEGEND FOR PLAN VIEW SHEETS

(NOTE: HATCH SCALE IN LEGEND WILL VARY FROM HATCH SCALE ON PLAN SHEETS BASED ON DRAWING SCALE.)

CONSTRUCT	DESCRIPTION
	CREEK/DITCH CENTERLINE
SF	SILT FENCE
X X	CHAIN LINK FENCE
CLR	CLEARING LIMITS
	CENTERLINE
	MINOR CONTOUR (PROPOSED)
70	MAJOR CONTOURS (PROPOSED)
TC TC	TURBIDITY CURTAIN
WS WS	WOOD SLASH MULCH BERM
	LEVEE AND REVETMENT EXCAVATION
	ACCESS ROAD
	TEMP. ELJ ACCESS ROAD AND WORK PLATFORM (ED2 – ED4)
	LEVEE TOE ROCK
	STAGING AREA
	TEMPORARY CONSTRUCTION ACCESS
	SETBACK LEVEE
	BANK DEFLECTOR ELJ
	LARGE APEX ELJ
	SMALL APEX ELJ
	BIOREVETMENT
	FLOODPLAIN ROUGHENING
	EXISTING TREE TO BE PROTECTED
	EXISTING TREE TO BE REMOVED
	EXISTING RIPRAP TO BE REMOVED (LR SHEETS)
	HEAVY LOOSE RIPRAP (LR5 ONLY)
	EXISTING LEVEE RESURFACING (LR5 & LR6)
	12" TOPSOIL
	18" TOPSOIL

GAS/POWER/TELEPHONE

SYMBOL EXIST.	SYMBOL CONSTRUCT	DESCRIPTION
		GAS METER
		GAS VALVE
		PAD MOUNTED TRANSFORMER
P	P	POWER VAULT
		TRANSMISSION TOWER (SCALEABLE)
		UTILITY POLE
		POWER POLE
		UTILITY POLE ANCHOR
		TELEPHONE RISER
T	T	TELEPHONE VAULT

DRAINAGE

SYMBOL EXIST.	SYMBOL CONSTRUCT	DESCRIPTION
		STORM DRAIN CATCH BASIN
		STORM DRAIN INLET(NO CATCH)
		STORM DRAIN CULVERT
		STORM DRAIN MANHOLE
25 L.F. 12"		STORM PIPE(PROPOSED) DOUBLE LINE TO SIZE OF PIPE DIAMETER

WATER

SYMBOL EXIST.	SYMBOL CONSTRUCT	DESCRIPTION
		GUARD POST
		HOSE BIB
FIRE HYDRANTS:		
		FH
		WATER VALVE

CONTRACTOR SHALL VERIFY LOCATION AND DEPTHS OF ALL EXISTING UTILITIES PRIOR TO CONSTRUCTION

SURVEY

SYMBOL	DESCRIPTION
	SOIL BORING
	SPOT ELEVATION
	TAX LOT / PARCEL NUMBER

X
X-X

STRUCTURE DETAILS NO.
CALL OUT DESIGNATION
DWG NO.

ABBREVIATIONS

ABAND	ABANDONED
AC	ASPHALT CONCRETE
ACP	ASPHALT CONCRETE PAVEMENT
ADJ	ADJUST
APPROX.	APPROXIMATELY
AVE	AVENUE
AVG	AVERAGE
BK	BACK
℄	BASELINE
BR	BIOREVETMENT
BLDG	BUILDING
BLVD	BOULEVARD
BM	BENCH MARK
BMP	BEST MANAGEMENT PRACTICE
BRG	BEARING
BTWN	BETWEEN
CB	CATCH BASIN
CL	CLASS
℄	CENTERLINE
CMP	CORRUGATED METAL PIPE
COMPT	COMPACTED
CONC	CONCRETE
CONST	CONSTRUCTION
CSBC	CRUSHED SURFACING BASE COURSE
CSTC	CRUSHED SURFACING TOP COURSE
CY	CUBIC YARD
DIAM	DIAMETER
DIST	DISTANCE
DWG	DRAWING
DWY	DRIVEWAY
E	EAST, ELECTRICAL
EA	EACH
EG	EXISTING GROUND
EL	ELEVATION
ELEC	ELECTRICAL
ELJ	ENGINEERED LOG JAM
EMB	EMBANKMENT
EP	EDGE OF PAVEMENT
EXCL	EXCLUDE
EXIST	EXISTING
FG	FINISHED GRADE
FH	FIRE HYDRANT
FR	FLOODPLAIN ROUGHENING
FT	FEET/FOOT
G	GAS LINE, GREEN
GALV	GALVANIZED
GB	GRADE BREAK
GR	GUARDRAIL
GRD	GROUND
GV	GAS VALVE
HORIZ	HORIZONTAL
HT	HEIGHT
HWY	HIGHWAY
ID	INSIDE DIAMETER
IE	INVERT ELEVATION
INV	INVERT
IN	INCH
L	LENGTH OF ARC
LF	LINEAL FOOT/FEET
LT	LEFT
LUMIN	LUMINAIRE
LW	LARGE WOOD
MAX	MAXIMUM
MH	MANHOLE
MIN	MINIMUM
MISC	MISCELLANEOUS
MON	MONUMENT
MUTCD	MANUAL ON UNIFORM TRAFFIC CONTROL DEVICES
N	NORTH
NO	NUMBER
NST	NOT STEEPER THAN
NTS	NOT TO SCALE
O–XING	OVERHEAD CROSSING
O.C.	ON CENTER
OD	OUTSIDE DIAMETER
OHW	ORDINARY HIGH WATER
OP	OVERHEAD POWER
OT	OVERHEAD TELEPHONE
P	POLE, POWER
PAV'T	PAVEMENT
PC	POINT OF CURVATURE
PCC	POINT OF COMPOUND CURVE
PED	PEDESTRIAN
PI	POINT OF INTERSECTION
PL	PROPERTY LINE
PP	POWER POLE
PRC	POINT OF REVERSE CURVE
PSI	POUND PER SQ IN
PT	POINT OF TANGENT
PVC	POLYVINYL CHLORIDE
PVCC	POINT OF VERTICAL COMPOUND CURVE
PVI	POINT OF VERTICAL INTERSECTION
PVRC	POINT OF VERTICAL REVERSE CURVE
QTY	QUANTITY
R	RADIUS
RCP	REINFORCED CONCRETE PIPE
RD	ROAD
REINF	REINFORCED
REQ'D	REQUIRED
RT	RIGHT
R/W	RIGHT-OF-WAY
S	SOUTH/SLOPE
SAN	SANITARY
SCHED	SCHEDULE
SD	STORM DRAIN
SECT	SECTION
SF	SQUARE FEET/FOOT
SHLD	SHOULDER
SHT	SHEET
SPEC	SPECIAL
SPECS	SPECIFICATIONS
SQ	SQUARE
SR	STATE ROUTE
SS	SANITARY SEWER
ST	STREET
STA	STATION
S/W	SIDEWALK
T	TELEPHONE, TANGENT, TON
TAN	TANGENT
TBM	TEMPORARY BENCHMARK
TCE	TEMPORARY CONSTRUCTION EASEMENT
TEMP	TEMPORARY
TESC	TEMPORARY EROSION AND SEDIMENTATION CONTROL
TP	TELEPHONE POLE
TYP	TYPICAL
UD	UNDERDRAIN PIPE
UG	UNDERGROUND
VAR	VARIES
VC	VERTICAL CURVE
VERT.	VERTICAL
W	WEST, WATER
W/	WITH
WB	WETLAND BOUNDARY
WM	WATER METER, WATERMAIN
W/O	WITHOUT
WV	WATER VALVE
WSE	WATER SURFACE ELEVATION
YDS	YARDS
&	AND

FIELD BOOK:
SURVEYED:
SURVEY BASE MAP:
CHECKED:

NUM.	REVISION	BY	DATE

APPROVED:	JEANNE STYPULA, PE	3–2016
PROJECT MANAGER:	CHRIS BRUMMER, PE	3–2016
DESIGNED:	CHRIS BRUMMER, PE	3–2016
ECOLOGIST:	STEPHANIE SHELTON	3–2016
DESIGN ENTERED:	HUE ONG	3–2016

SRFB # RCO 087–1910C

PROJECT No. 1112049 (FL9001)

CHRISTOPHER JON BRUMMER
STATE OF WASHINGTON
40695
REGISTERED
PROFESSIONAL ENGINEER
3/23/16

King County
Department of Natural Resources and Parks
Water and Land Resources Division
River and Floodplain Management Section
Christie True, Director

COUNTYLINE LEVEE SETBACK

LEGEND AND ABBREVIATIONS

SHEET 2 OF 58 SHEETS

GN2

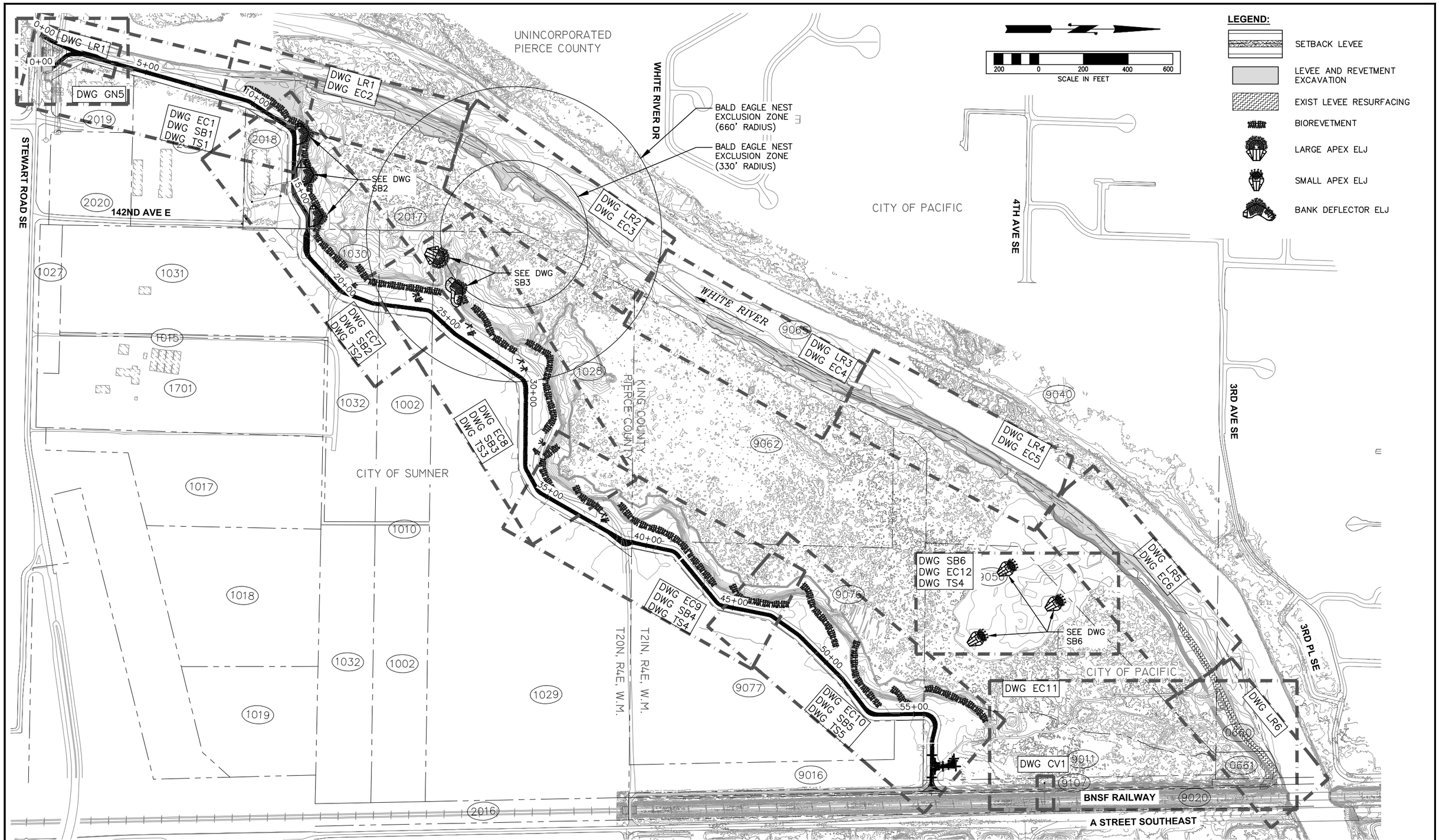

FIELD BOOK:	NUM.	REVISION	BY	DATE
SURVEYED:				
SURVEY BASE MAP:				
CHECKED:				

APPROVED: JEANNE STYPULA, PE	3-2016
PROJECT MANAGER: CHRIS BRUMMER, PE	3-2016
DESIGNED: CHRIS BRUMMER, PE	3-2016
ECOLOGIST: STEPHANIE SHELTON	3-2016
DESIGN ENTERED: HUE ONG	3-2016

SRFB # RCO 087-1910C

PROJECT No. 1112049 (FL9001)

CHRISTOPHER JON BRUMMER — STATE OF WASHINGTON — 40695 — REGISTERED PROFESSIONAL ENGINEER — 3/23/16

JAMES B. MOSTRAND — STATE OF WASHINGTON — 36069 — REGISTERED PROFESSIONAL ENGINEER — 03/23/16

King County
Department of Natural Resources and Parks
Water and Land Resources Division
River and Floodplain Management Section
Christie True, Director

COUNTYLINE LEVEE SETBACK

SITE PLAN AND KEY SHEET

SHEET 3 OF 58 SHEETS

GN3

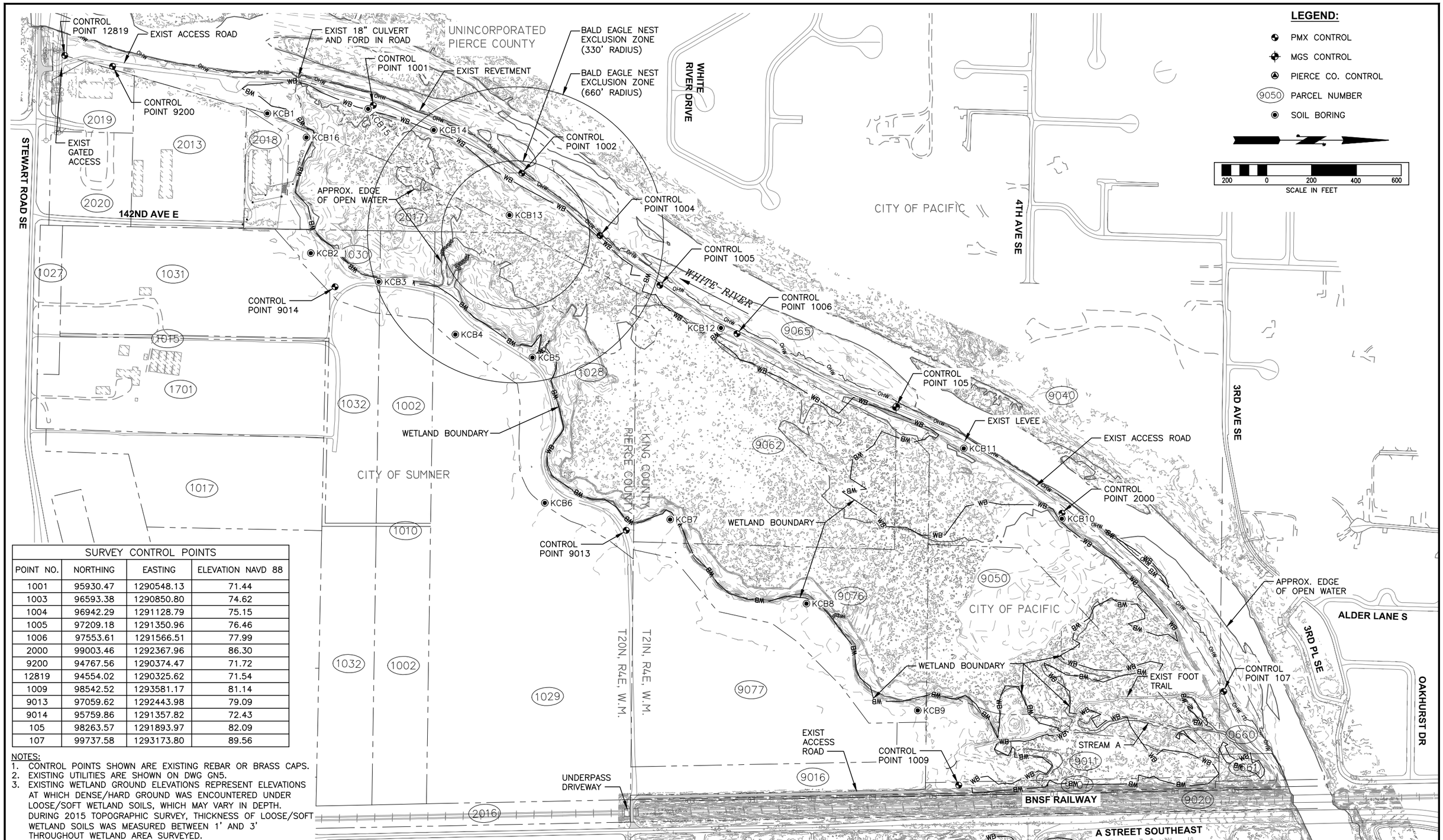

SURVEY CONTROL POINTS			
POINT NO.	NORTHING	EASTING	ELEVATION NAVD 88
1001	95930.47	1290548.13	71.44
1003	96593.38	1290850.80	74.62
1004	96942.29	1291128.79	75.15
1005	97209.18	1291350.96	76.46
1006	97553.61	1291566.51	77.99
2000	99003.46	1292367.96	86.30
9200	94767.56	1290374.47	71.72
12819	94554.02	1290325.62	71.54
1009	98542.52	1293581.17	81.14
9013	97059.62	1292443.98	79.09
9014	95759.86	1291357.82	72.43
105	98263.57	1291893.97	82.09
107	99737.58	1293173.80	89.56

NOTES:
1. CONTROL POINTS SHOWN ARE EXISTING REBAR OR BRASS CAPS.
2. EXISTING UTILITIES ARE SHOWN ON DWG GN5.
3. EXISTING WETLAND GROUND ELEVATIONS REPRESENT ELEVATIONS AT WHICH DENSE/HARD GROUND WAS ENCOUNTERED UNDER LOOSE/SOFT WETLAND SOILS, WHICH MAY VARY IN DEPTH. DURING 2015 TOPOGRAPHIC SURVEY, THICKNESS OF LOOSE/SOFT WETLAND SOILS WAS MEASURED BETWEEN 1' AND 3' THROUGHOUT WETLAND AREA SURVEYED.

FIELD BOOK:
SURVEYED:
SURVEY BASE MAP:
CHECKED:

NUM.	REVISION	BY	DATE

APPROVED:	JEANNE STYPULA, PE	3-2016
PROJECT MANAGER:	CHRIS BRUMMER, PE	3-2016
DESIGNED:	CHRIS BRUMMER, PE	3-2016
ECOLOGIST:	STEPHANIE SHELTON	3-2016
DESIGN ENTERED:	HUE ONG	3-2016

SRFB # RCO 087-1910C

PROJECT No. 1112049 (FL9001)

CHRISTOPHER JON BRUMMER
STATE OF WASHINGTON
40695
REGISTERED PROFESSIONAL ENGINEER
3/23/16

King County
Department of Natural Resources and Parks
Water and Land Resources Division
River and Floodplain Management Section
Christie True, Director

COUNTYLINE LEVEE SETBACK

EXISTING CONDITIONS AND SURVEY CONTROL

SHEET 4 OF 58 SHEETS

GN4

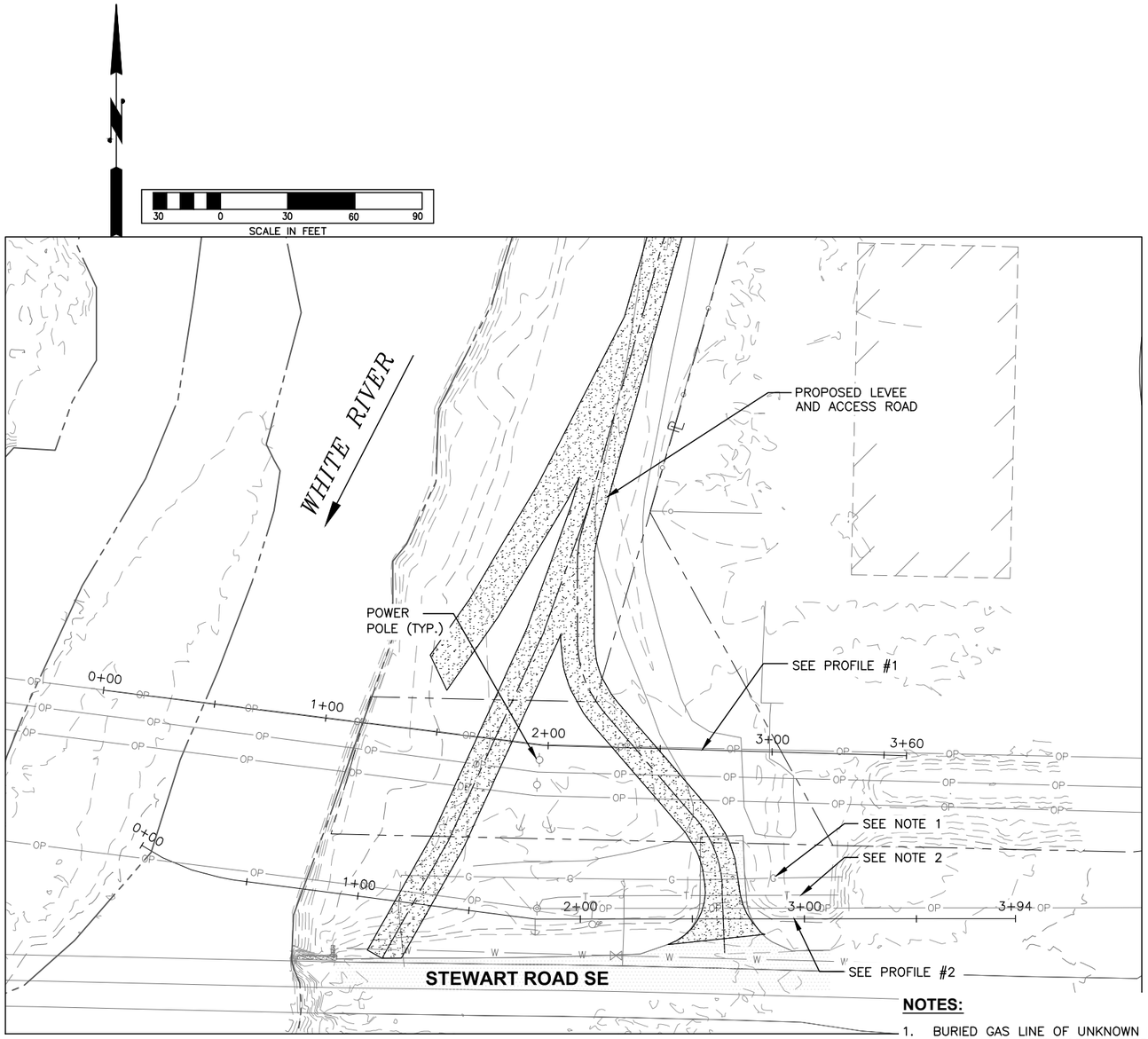

LEVEE ACCESS ROAD
FROM STEWART ROAD SE (1)

NOTES:

1. BURIED GAS LINE OF UNKNOWN DEPTH OFFSET APPROX. 20 FEET NORTH OF PROFILE NO. 2.
2. BURIED CABLE LINE OF UNKNOWN DEPTH OFFSET APPROX. 10 FEET NORTH OF PROFILE NO. 2.
3. REFER TO PSE CONSENT FOR USE FOR MIN. CLEARANCES BELOW OVERHEAD POWER LINES.
4. REFER TO SECTION 01 40 00 FOR MIN. CLEARANCE BELOW COMMUNICATION LINE.

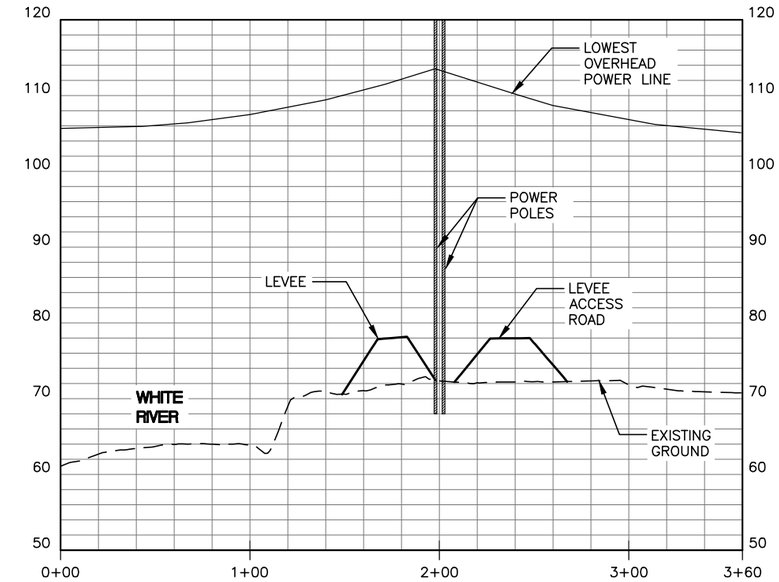

PROFILE NO.1 – O'BRIEN 115KV (2)
SCALE: 1"=40'

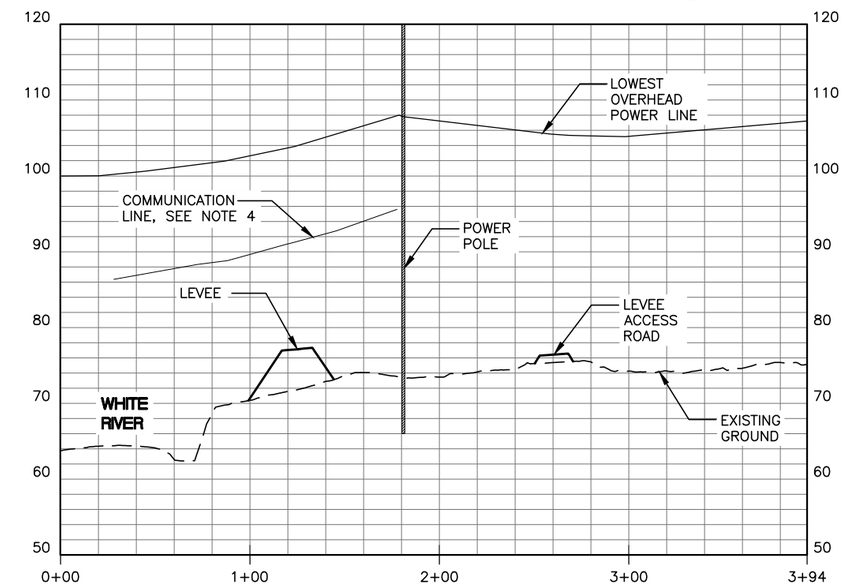

PROFILE NO.2
STARWOOD 115 KV / DIERINGER 12.5KV (3)
SCALE: 1"=40'

FIELD BOOK:	NUM.	REVISION	BY	DATE	APPROVED: JEANNE STYPULA, PE	3-2016	SRFB # RCO 087-1910C	
SURVEYED:					PROJECT MANAGER: CHRIS BRUMMER, PE	3-2016	PROJECT No. 1112049 (FL9001)	
SURVEY BASE MAP:					DESIGNED: CHRIS BRUMMER, PE	3-2016		
CHECKED:					ECOLOGIST: STEPHANIE SHELTON	3-2016		
					DESIGN ENTERED: HUE ONG	3-2016		

CHRISTOPHER JON BRUMMER, STATE OF WASHINGTON, 40695, REGISTERED PROFESSIONAL ENGINEER
3/23/16

King County
Department of Natural Resources and Parks
Water and Land Resources Division
River and Floodplain Management Section
Christie True, Director

COUNTYLINE LEVEE SETBACK

EXISTING UTILITIES

SHEET 5 OF 58 SHEETS

GN5

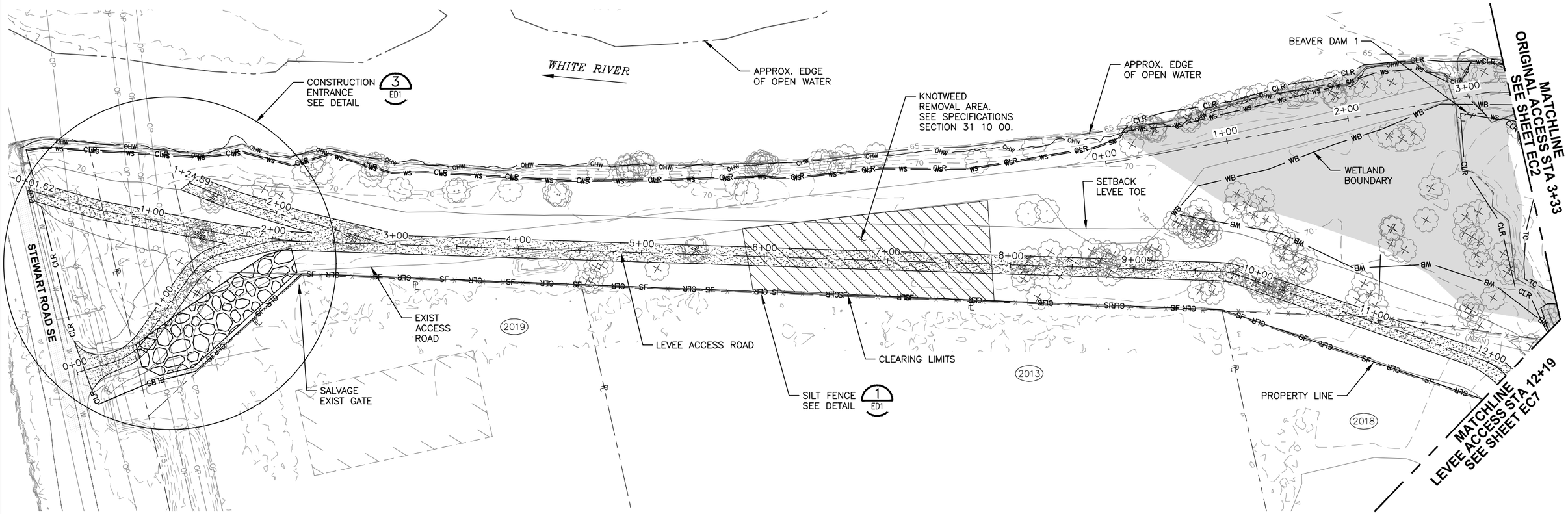

LEGEND:

- CLR — CLEARING LIMITS
- OHW — ORDINARY HIGH WATER
- SF — SILT FENCE
- TC — TURBIDITY CURTAIN
- WS — WOOD SLASH MULCH BERM
- WB — WETLAND BOUNDARY
- EDGE OF OPEN WATER (APPROX.)
- KNOTWEED REMOVAL AREA
- LEVEE AND REVETMENT EXCAVATION
- LEVEE TOE ROCK USED FOR ELJ WORK PLATFORM
- SETBACK LEVEE
- EXIST TREE TO BE PROTECTED
- EXIST TREE TO BE REMOVED

40 0 40 80 120
SCALE IN FEET

FIELD BOOK:	NUM.	REVISION	BY	DATE	APPROVED: JEANNE STYPULA, PE	3-2016	SRFB # RCO 087-1910C
SURVEYED:					PROJECT MANAGER: CHRIS BRUMMER, PE	3-2016	PROJECT No. 1112049 (FL9001)
SURVEY BASE MAP:					DESIGNED: CHRIS BRUMMER, PE	3-2016	
CHECKED:					ECOLOGIST: STEPHANIE SHELTON	3-2016	
					DESIGN ENTERED: HUE ONG	3-2016	

CHRISTOPHER JON BRUMMER — STATE OF WASHINGTON — 40695 — REGISTERED PROFESSIONAL ENGINEER — 3/23/16

JAMES MOSTRAMO — STATE OF WASHINGTON — 36069 — REGISTERED PROFESSIONAL ENGINEER — 03/23/16

King County
Department of Natural Resources and Parks
Water and Land Resources Division
River and Floodplain Management Section
Christie True, Director

COUNTYLINE LEVEE SETBACK

TESC AND SITE CLEARING PLAN

SHEET 6 OF 58 SHEETS

EC1

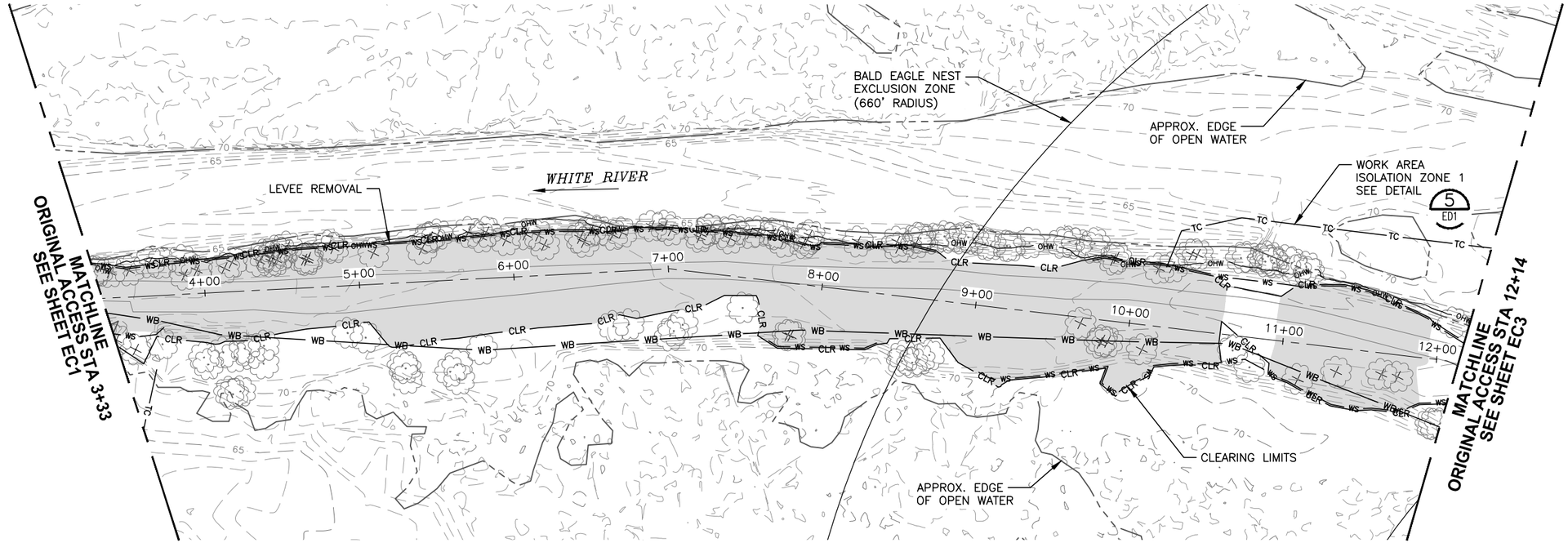

LEGEND:

- CLR — CLEARING LIMITS
- OHW — ORDINARY HIGH WATER
- TC — TURBIDITY CURTAIN
- WS — WOOD SLASH MULCH BERM
- WB — WETLAND BOUNDARY
- EDGE OF OPEN WATER (APPROX.)
- LEVEE AND REVETMENT EXCAVATION
- EXIST TREE TO BE PROTECTED
- EXIST TREE TO BE REMOVED

40 0 40 80 120
SCALE IN FEET

FIELD BOOK:
SURVEYED:
SURVEY BASE MAP:
CHECKED:

NUM.	REVISION	BY	DATE

APPROVED:	JEANNE STYPULA, PE	3-2016
PROJECT MANAGER:	CHRIS BRUMMER, PE	3-2016
DESIGNED:	CHRIS BRUMMER, PE	3-2016
ECOLOGIST:	STEPHANIE SHELTON	3-2016
DESIGN ENTERED:	HUE ONG	3-2016

SRFB # RCO 087-1910C

PROJECT No. 1112049 (FL9001)

CHRISTOPHER JON BRUMMER
STATE OF WASHINGTON
40695
REGISTERED
PROFESSIONAL ENGINEER
3/23/16

King County
Department of Natural Resources and Parks
Water and Land Resources Division
River and Floodplain Management Section
Christie True, Director

COUNTYLINE LEVEE SETBACK

TESC AND SITE CLEARING PLAN

SHEET 7 OF 58 SHEETS

EC2

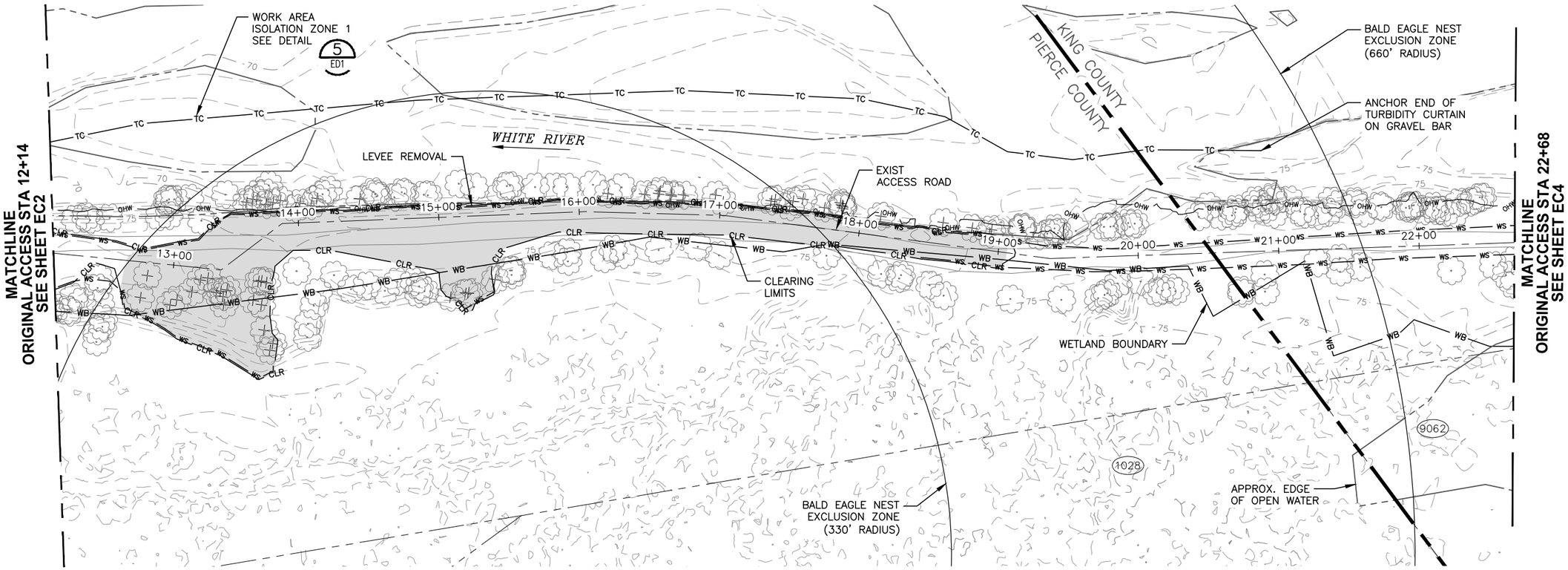

LEGEND:

- CLR — CLEARING LIMITS
- OHW — ORDINARY HIGH WATER
- TC — TURBIDITY CURTAIN
- WS — WOOD SLASH MULCH BERM
- WB — WETLAND BOUNDARY
- EDGE OF OPEN WATER (APPROX.)
- LEVEE AND REVETMENT EXCAVATION
- EXIST TREE TO BE PROTECTED
- EXIST TREE TO BE REMOVED

40 0 40 80 120
SCALE IN FEET

FIELD BOOK:
SURVEYED:
SURVEY BASE MAP:
CHECKED:

NUM.	REVISION	BY	DATE

APPROVED:	JEANNE STYPULA, PE	3-2016
PROJECT MANAGER:	CHRIS BRUMMER, PE	3-2016
DESIGNED:	CHRIS BRUMMER, PE	3-2016
ECOLOGIST:	STEPHANIE SHELTON	3-2016
DESIGN ENTERED:	HUE ONG	3-2016

SRFB # RCO 087-1910C

PROJECT No. 1112049 (FL9001)

CHRISTOPHER JON BRUMMER
STATE OF WASHINGTON
40695
REGISTERED
PROFESSIONAL ENGINEER
3/23/16

King County
Department of Natural Resources and Parks
Water and Land Resources Division
River and Floodplain Management Section
Christie True, Director

COUNTYLINE LEVEE SETBACK

TESC AND SITE CLEARING PLAN

SHEET 8 OF 58 SHEETS

EC3

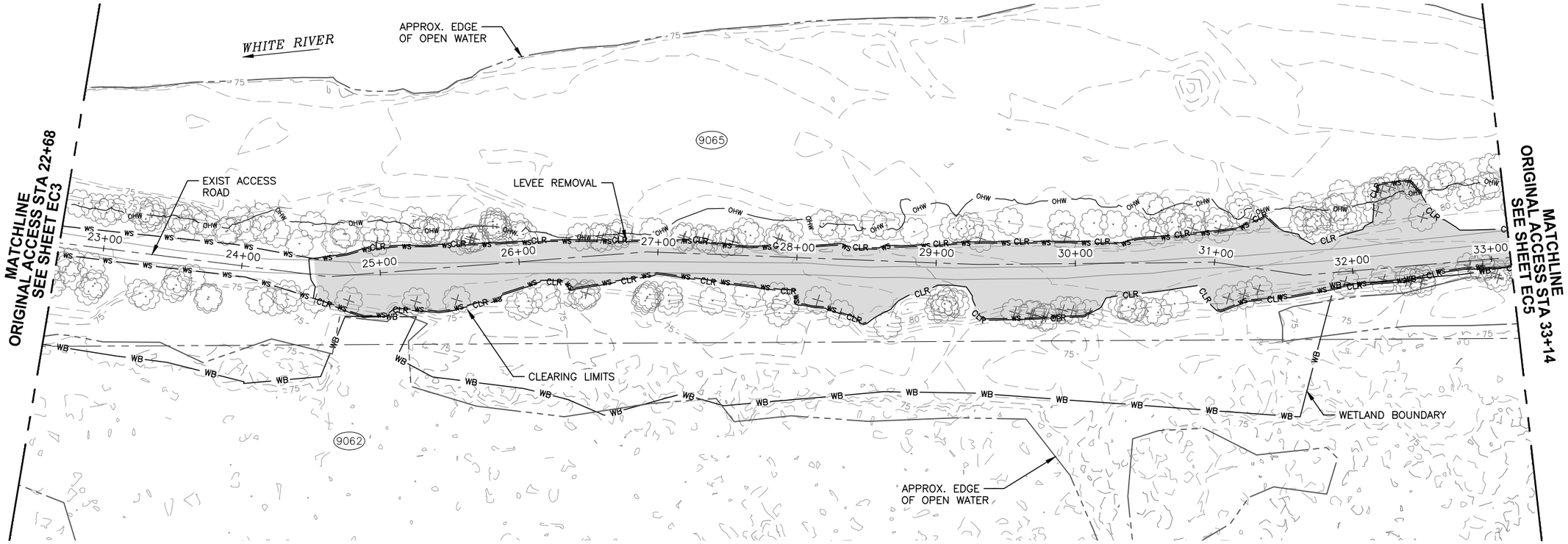

LEGEND:

- CLR — CLEARING LIMITS
- OHW — ORDINARY HIGH WATER
- TC — TURBIDITY CURTAIN
- WS — WOOD SLASH MULCH BERM
- WB — WETLAND BOUNDARY
- EDGE OF OPEN WATER (APPROX.)
- LEVEE AND REVETMENT EXCAVATION
- EXIST TREE TO BE PROTECTED
- EXIST TREE TO BE REMOVED

40 0 40 80 120
SCALE IN FEET

FIELD BOOK:
SURVEYED:
SURVEY BASE MAP:
CHECKED:

NUM.	REVISION	BY	DATE

APPROVED:	JEANNE STYPULA, PE	3-2016
PROJECT MANAGER:	CHRIS BRUMMER, PE	3-2016
DESIGNED:	CHRIS BRUMMER, PE	3-2016
ECOLOGIST:	STEPHANIE SHELTON	3-2016
DESIGN ENTERED:	HUE ONG	3-2016

SRFB # RCO 087-1910C

PROJECT No. 1112049 (FL9001)

CHRISTOPHER JON BRUMMER STATE OF WASHINGTON 40695 REGISTERED PROFESSIONAL ENGINEER
3/23/16

King County
Department of Natural Resources and Parks
Water and Land Resources Division
River and Floodplain Management Section
Christie True, Director

COUNTYLINE LEVEE SETBACK

TESC AND SITE CLEARING PLAN

SHEET 9 OF 58 SHEETS

EC4

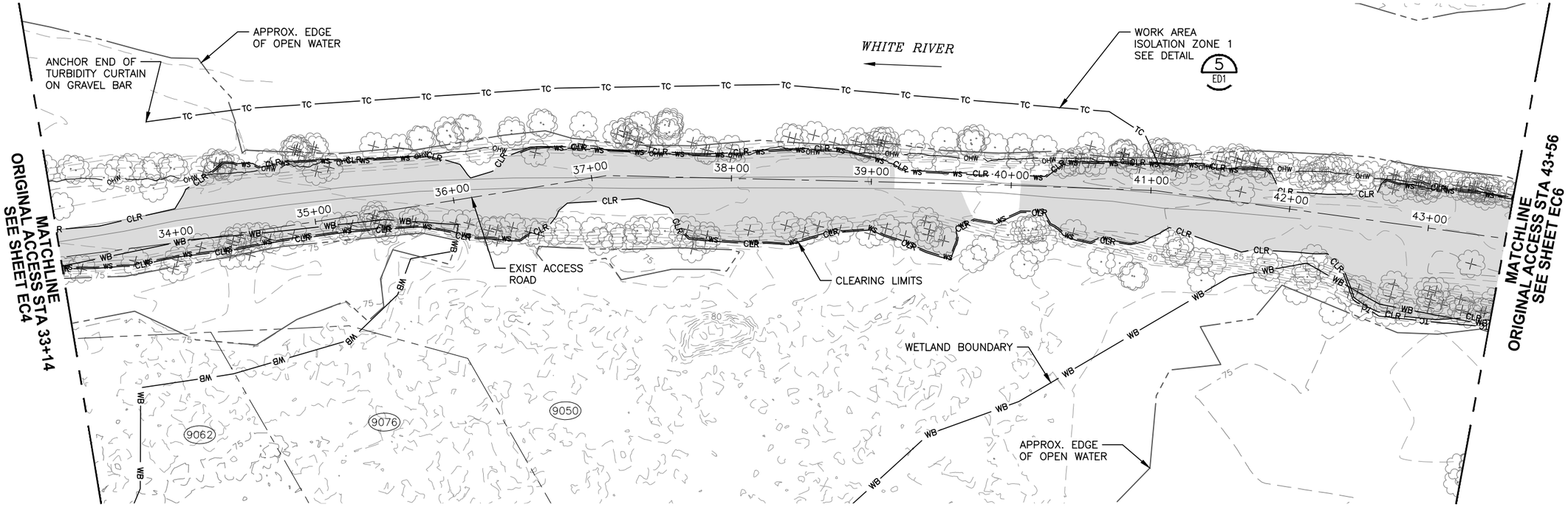

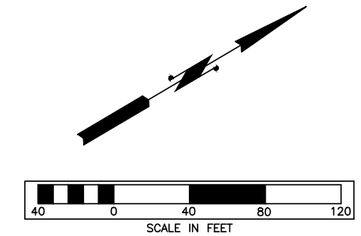

LEGEND:

- CLR — CLEARING LIMITS
- OHW — ORDINARY HIGH WATER
- TC — TURBIDITY CURTAIN
- WS — WOOD SLASH MULCH BERM
- WB — WETLAND BOUNDARY
- EDGE OF OPEN WATER (APPROX.)
- LEVEE AND REVETMENT EXCAVATION
- EXIST TREE TO BE PROTECTED
- EXIST TREE TO BE REMOVED

FIELD BOOK:		NUM.	REVISION	BY	DATE
SURVEYED:					
SURVEY BASE MAP:					
CHECKED:					

APPROVED:	JEANNE STYPULA, PE	3-2016
PROJECT MANAGER:	CHRIS BRUMMER, PE	3-2016
DESIGNED:	CHRIS BRUMMER, PE	3-2016
ECOLOGIST:	STEPHANIE SHELTON	3-2016
DESIGN ENTERED:	HUE ONG	3-2016

SRFB # RCO 087-1910C

PROJECT No. 1112049 (FL9001)

CHRISTOPHER JON BRUMMER
STATE OF WASHINGTON
40695
REGISTERED
PROFESSIONAL ENGINEER
3/23/16

King County
Department of Natural Resources and Parks
Water and Land Resources Division
River and Floodplain Management Section
Christie True, Director

COUNTYLINE LEVEE SETBACK

TESC AND SITE CLEARING PLAN

SHEET 10 OF 58 SHEETS

EC5

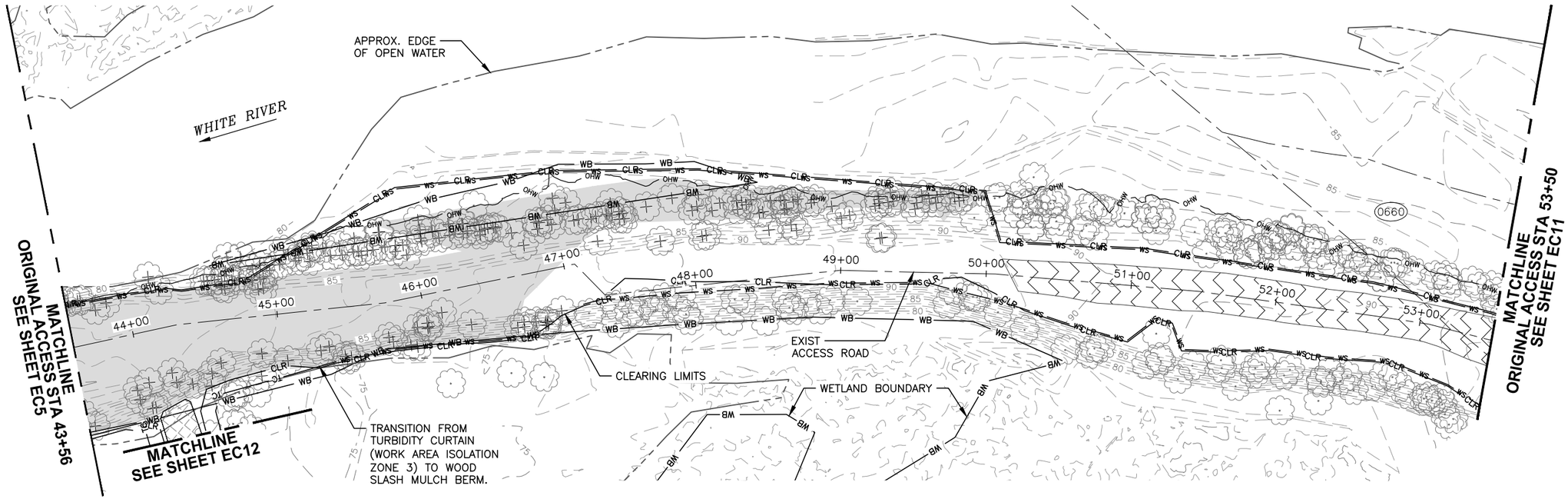

LEGEND:

- CLR — CLEARING LIMITS
- OHW — ORDINARY HIGH WATER
- TC — TURBIDITY CURTAIN
- WS — WOOD SLASH MULCH BERM
- WB — WETLAND BOUNDARY
- EDGE OF OPEN WATER (APPROX.)
- LEVEE AND REVETMENT EXCAVATION
- TEMP. ELJ ACCESS ROAD AND WORK PLATFORM
- EXISTING LEVEE RESURFACING
- EXIST TREE TO BE PROTECTED
- EXIST TREE TO BE REMOVED

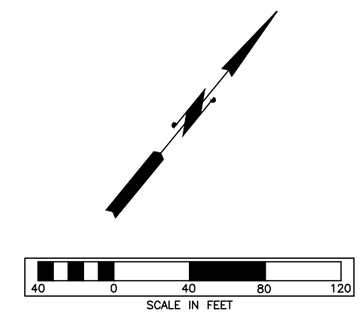

FIELD BOOK:			
SURVEYED:			
SURVEY BASE MAP:			
CHECKED:			

NUM.	REVISION	BY	DATE

APPROVED:	JEANNE STYPULA, PE	3-2016
PROJECT MANAGER:	CHRIS BRUMMER, PE	3-2016
DESIGNED:	CHRIS BRUMMER, PE	3-2016
ECOLOGIST:	STEPHANIE SHELTON	3-2016
DESIGN ENTERED:	HUE ONG	3-2016

SRFB # RCO 087-1910C

PROJECT No. 1112049 (FL9001)

CHRISTOPHER JON BRUMMER — STATE OF WASHINGTON — 40695 — REGISTERED PROFESSIONAL ENGINEER
3/23/16

King County
Department of Natural Resources and Parks
Water and Land Resources Division
River and Floodplain Management Section
Christie True, Director

COUNTYLINE LEVEE SETBACK

TESC AND SITE CLEARING PLAN

SHEET 11 OF 58 SHEETS

EC6

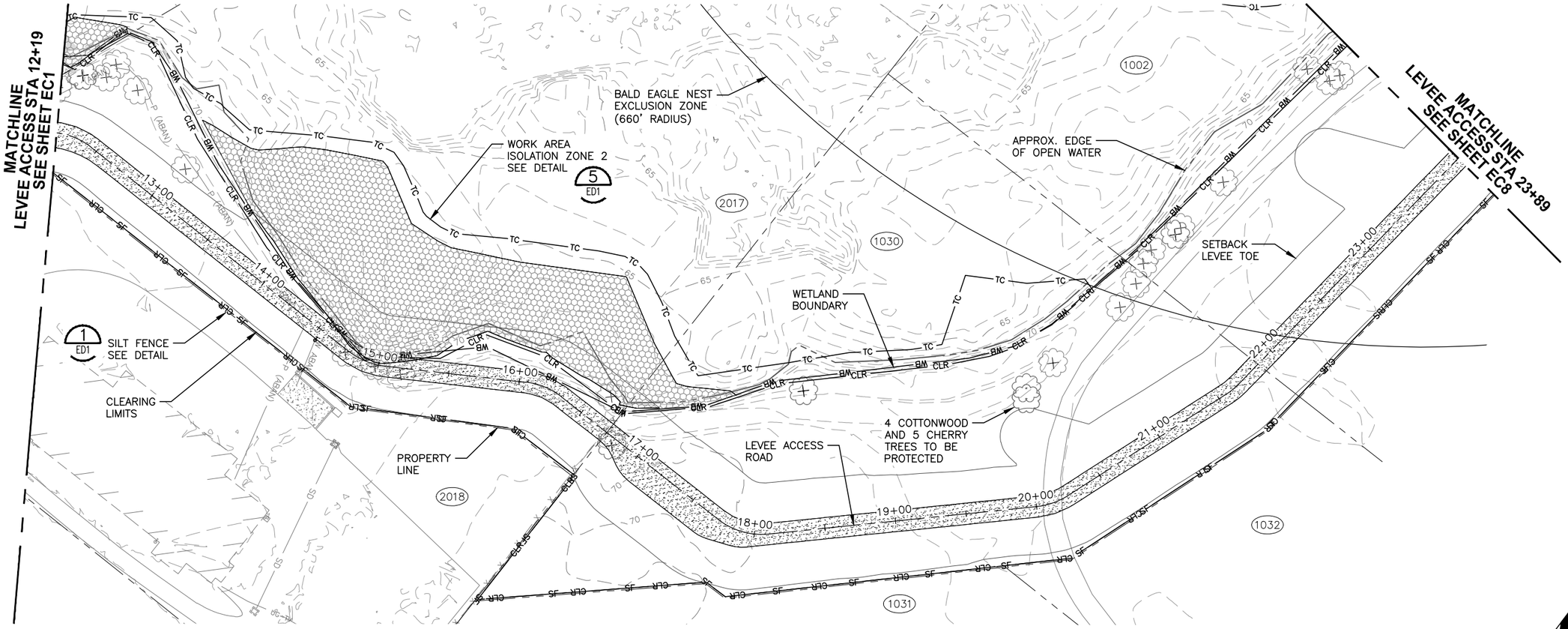

LEGEND:

- CLR — CLEARING LIMITS
- SF — SILT FENCE
- TC — TURBIDITY CURTAIN
- WB — WETLAND BOUNDARY
- EDGE OF OPEN WATER (APPROX.)
- LEVEE TOE ROCK USED FOR ELJ WORK PLATFORM
- SETBACK LEVEE
- EXIST TREE TO BE PROTECTED
- EXIST TREE TO BE REMOVED

40 0 40 80 120
SCALE IN FEET

FIELD BOOK:
SURVEYED:
SURVEY BASE MAP:
CHECKED:

NUM.	REVISION	BY	DATE

APPROVED:	JEANNE STYPULA, PE	3-2016
PROJECT MANAGER:	CHRIS BRUMMER, PE	3-2016
DESIGNED:	CHRIS BRUMMER, PE	3-2016
ECOLOGIST:	STEPHANIE SHELTON	3-2016
DESIGN ENTERED:	HUE ONG	3-2016

SRFB # RCO 087-1910C

PROJECT No. 1112049 (FL9001)

CHRISTOPHER JON BRUMMER — STATE OF WASHINGTON — 40695 — REGISTERED PROFESSIONAL ENGINEER — 3/23/16

IAN B MOSTERMAN — STATE OF WASHINGTON — 36069 — REGISTERED PROFESSIONAL ENGINEER — 03/23/16

King County
Department of Natural Resources and Parks
Water and Land Resources Division
River and Floodplain Management Section
Christie True, Director

COUNTYLINE LEVEE SETBACK

TESC AND SITE CLEARING PLAN

SHEET 12 OF 58 SHEETS

EC7

WORK AREA ISOLATION ZONE 2 SEE DETAIL 5 ED1

TEMP. ELJ ACCESS ROAD, SEE DETAIL 6 ED1

BEAVER DAM 2

BEAVER DAM 3

CLEARING LIMITS

BALD EAGLE NEST EXCLUSION ZONE (330' RADIUS)

1 ALDER, 9 COTTONWOOD, AND 5 CHERRY TREES TO BE PROTECTED

BEAVER DAM 4

EXIST ACCESS ROAD

WETLAND BOUNDARY

APPROX. EDGE OF OPEN WATER

SETBACK LEVEE TOE

LEVEE ACCESS ROAD

4 COTTONWOOD TREES TO BE PROTECTED

1 COTTONWOOD TREE TO BE PROTECTED

1 COTTONWOOD AND 6 CHERRY TREES TO BE PROTECTED

1 COTTONWOOD TREE TO BE PROTECTED

BALD EAGLE NEST EXCLUSION ZONE (660' RADIUS)

CLEARING LIMITS

SILT FENCE SEE DETAIL 1 ED1

MATCHLINE LEVEE ACCESS STA 23+89 SEE SHEET EC7

MATCHLINE LEVEE ACCESS STA 34+93 SEE SHEET EC9

24+00 25+00 26+00 27+00 28+00 29+00 30+00 31+00 32+00 33+00 34+00

1002 1028 1029

LEGEND:

- CLR — CLEARING LIMITS
- SF — SILT FENCE
- TC — TURBIDITY CURTAIN
- WB — WETLAND BOUNDARY
- EDGE OF OPEN WATER (APPROX.)
- TEMP. ELJ ACCESS ROAD AND WORK PLATFORM
- SETBACK LEVEE
- EXIST TREE TO BE PROTECTED
- EXIST TREE TO BE REMOVED

40 0 40 80 120
SCALE IN FEET

FIELD BOOK:		NUM.	REVISION	BY	DATE
SURVEYED:					
SURVEY BASE MAP:					
CHECKED:					

APPROVED:	JEANNE STYPULA, PE	3-2016
PROJECT MANAGER:	CHRIS BRUMMER, PE	3-2016
DESIGNED:	CHRIS BRUMMER, PE	3-2016
ECOLOGIST:	STEPHANIE SHELTON	3-2016
DESIGN ENTERED:	HUE ONG	3-2016

SRFB # RCO 087-1910C

PROJECT No. 1112049 (FL9001)

CHRISTOPHER JON BRUMMER STATE OF WASHINGTON 40695 REGISTERED PROFESSIONAL ENGINEER 3/23/16

JAMES B MOSTRAND STATE OF WASHINGTON 36069 REGISTERED PROFESSIONAL ENGINEER 03/23/16

King County
Department of Natural Resources and Parks
Water and Land Resources Division
River and Floodplain Management Section
Christie True, Director

COUNTYLINE LEVEE SETBACK

TESC AND SITE CLEARING PLAN

SHEET 13 OF 58 SHEETS

EC8

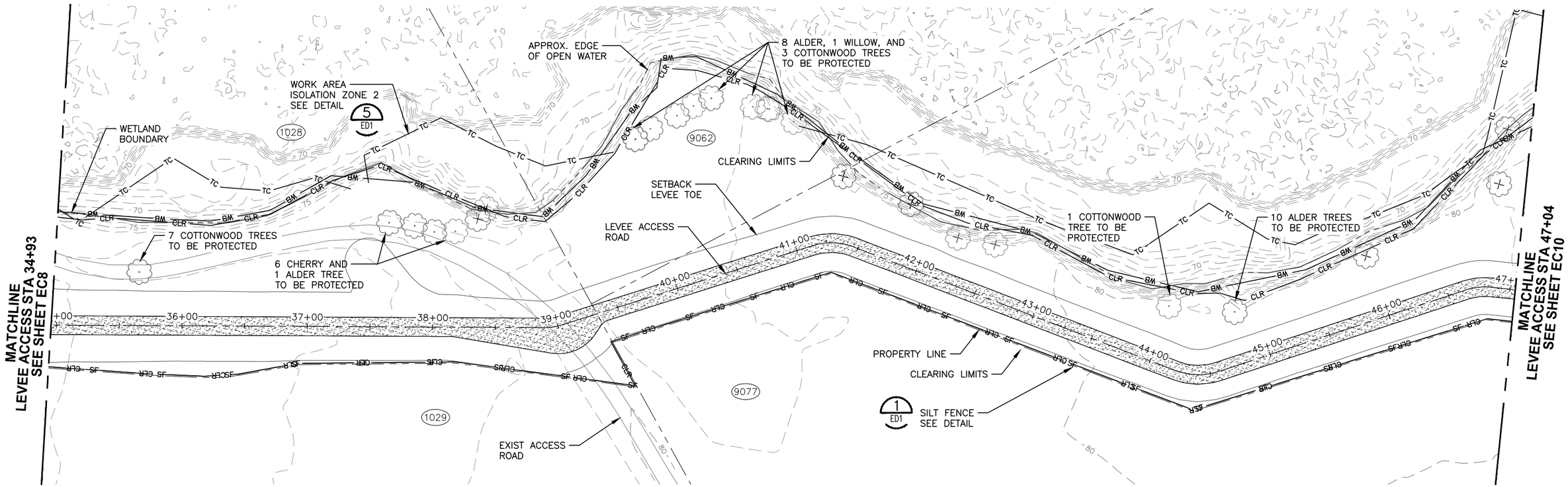

LEGEND:

- CLR — CLEARING LIMITS
- SF — SILT FENCE
- TC — TURBIDITY CURTAIN
- WB — WETLAND BOUNDARY
- EDGE OF OPEN WATER (APPROX.)
- SETBACK LEVEE
- EXIST TREE TO BE PROTECTED
- EXIST TREE TO BE REMOVED

40 0 40 80 120
SCALE IN FEET

FIELD BOOK:		NUM.	REVISION	BY	DATE	APPROVED: JEANNE STYPULA, PE	3-2016
SURVEYED:						PROJECT MANAGER: CHRIS BRUMMER, PE	3-2016
SURVEY BASE MAP:						DESIGNED: CHRIS BRUMMER, PE	3-2016
CHECKED:						ECOLOGIST: STEPHANIE SHELTON	3-2016
						DESIGN ENTERED: HUE ONG	3-2016

SRFB # RCO 087-1910C

PROJECT No. 1112049 (FL9001)

CHRISTOPHER JON BRUMMER — STATE OF WASHINGTON — 40695 — REGISTERED PROFESSIONAL ENGINEER — 3/23/16

JAMES B. MOSTRAM JR. — STATE OF WASHINGTON — 36069 — REGISTERED PROFESSIONAL ENGINEER — 03/23/16

King County
Department of Natural Resources and Parks
Water and Land Resources Division
River and Floodplain Management Section
Christie True, Director

COUNTYLINE LEVEE SETBACK

TESC AND SITE CLEARING PLAN

SHEET 14 OF 58 SHEETS

EC9

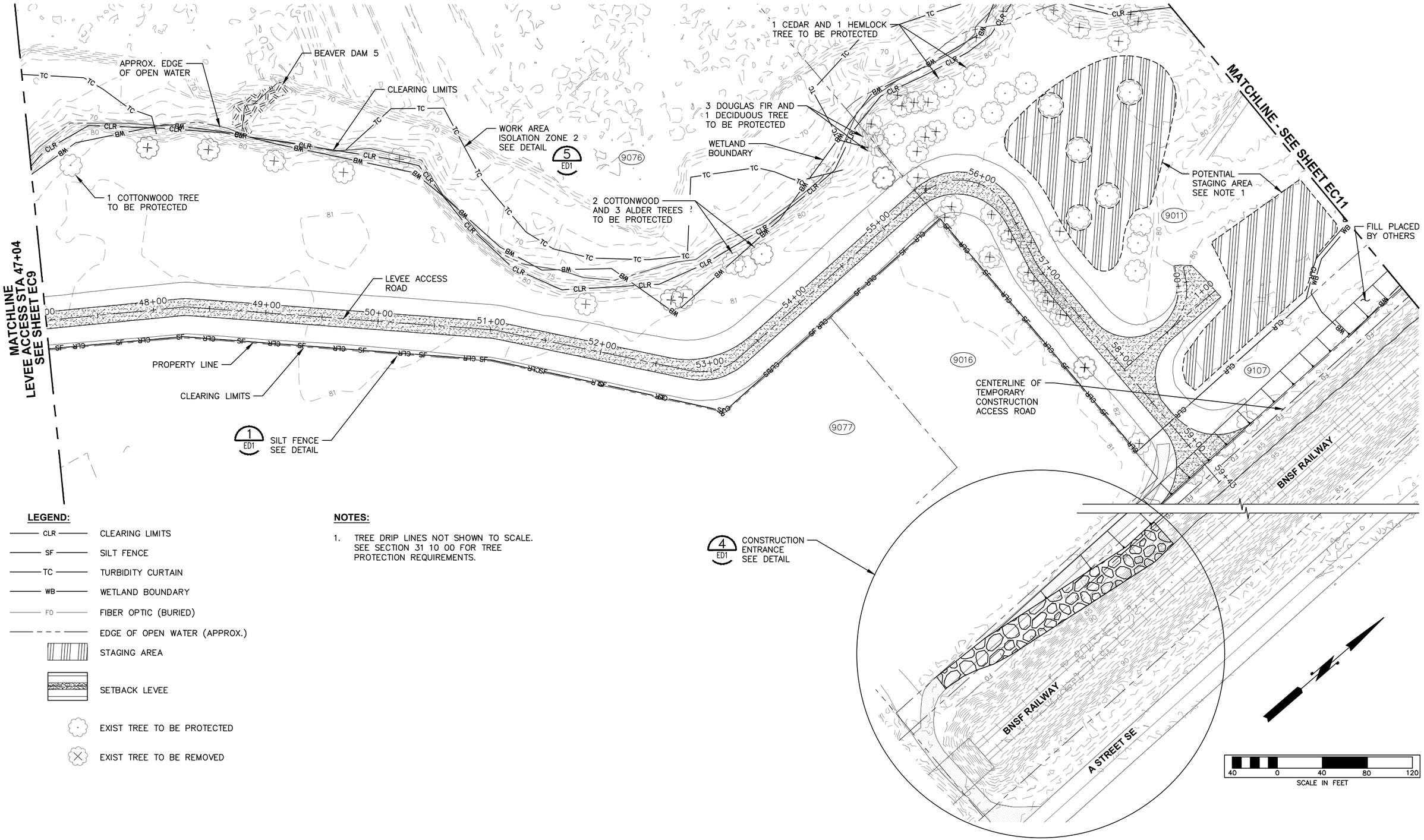

LEGEND:

- CLR — CLEARING LIMITS
- SF — SILT FENCE
- TC — TURBIDITY CURTAIN
- WB — WETLAND BOUNDARY
- FO — FIBER OPTIC (BURIED)
- EDGE OF OPEN WATER (APPROX.)
- STAGING AREA
- SETBACK LEVEE
- EXIST TREE TO BE PROTECTED
- EXIST TREE TO BE REMOVED

NOTES:

1. TREE DRIP LINES NOT SHOWN TO SCALE. SEE SECTION 31 10 00 FOR TREE PROTECTION REQUIREMENTS.

FIELD BOOK:
SURVEYED:
SURVEY BASE MAP:
CHECKED:

NUM.	REVISION	BY	DATE

APPROVED:	JEANNE STYPULA, PE	3-2016
PROJECT MANAGER:	CHRIS BRUMMER, PE	3-2016
DESIGNED:	CHRIS BRUMMER, PE	3-2016
ECOLOGIST:	STEPHANIE SHELTON	3-2016
DESIGN ENTERED:	HUE ONG	3-2016

SRFB # RCO 087-1910C

PROJECT No. 1112049 (FL9001)

CHRISTOPHER JON BRUMMER — STATE OF WASHINGTON — 40595 — REGISTERED PROFESSIONAL ENGINEER — 3/23/16

JAMES MOSTERNAO — STATE OF WASHINGTON — 36069 — REGISTERED PROFESSIONAL ENGINEER — 03/23/16

King County
Department of Natural Resources and Parks
Water and Land Resources Division
River and Floodplain Management Section
Christie True, Director

COUNTYLINE LEVEE SETBACK

TESC AND SITE CLEARING PLAN

SHEET 15 OF 58 SHEETS

EC10

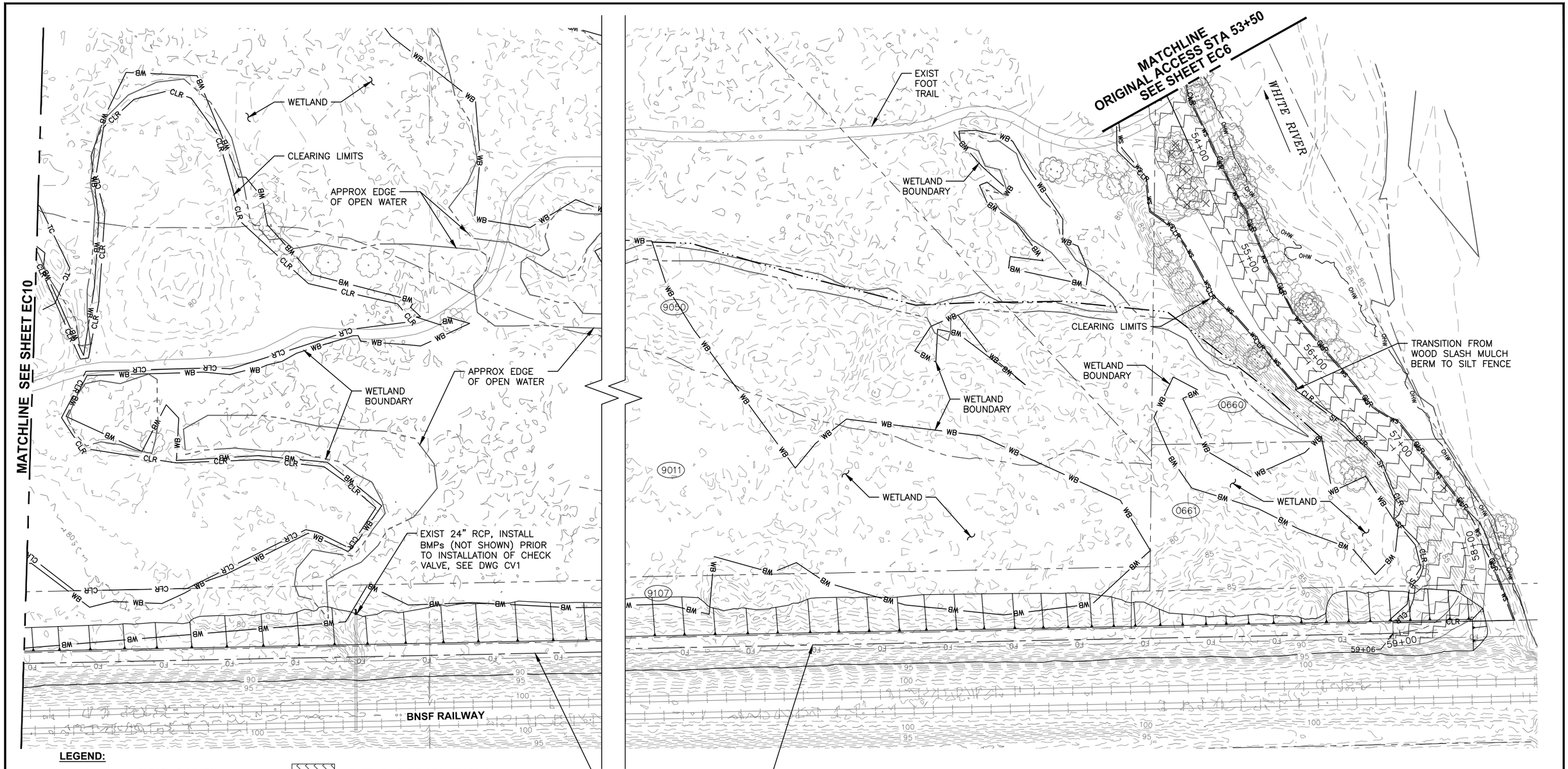

LEGEND:

CLR	CLEARING LIMITS
OHW	ORDINARY HIGH WATER
TC	TURBIDITY CURTAIN
WS	WOOD SLASH MULCH BERM
WB	WETLAND BOUNDARY
FO	FIBER OPTIC (BURIED)
	EDGE OF OPEN WATER (APPROX.)
	EXISTING LEVEE RESURFACING
	EXIST TREE TO BE PROTECTED
	EXIST TREE TO BE REMOVED

FIELD BOOK:
SURVEYED:
SURVEY BASE MAP:
CHECKED:

NUM.	REVISION	BY	DATE

APPROVED:	JEANNE STYPULA, PE	3-2016
PROJECT MANAGER:	CHRIS BRUMMER, PE	3-2016
DESIGNED:	CHRIS BRUMMER, PE	3-2016
ECOLOGIST:	STEPHANIE SHELTON	3-2016
DESIGN ENTERED:	HUE ONG	3-2016

SRFB # RCO 087-1910C

PROJECT No. 1112049 (FL9001)

CHRISTOPHER JON BRUMMER STATE OF WASHINGTON 40595 REGISTERED PROFESSIONAL ENGINEER
3/23/16

King County
Department of Natural Resources and Parks
Water and Land Resources Division
River and Floodplain Management Section
Christie True, Director

COUNTYLINE LEVEE SETBACK

TESC AND SITE CLEARING PLAN

SHEET 16 OF 58 SHEETS

EC11

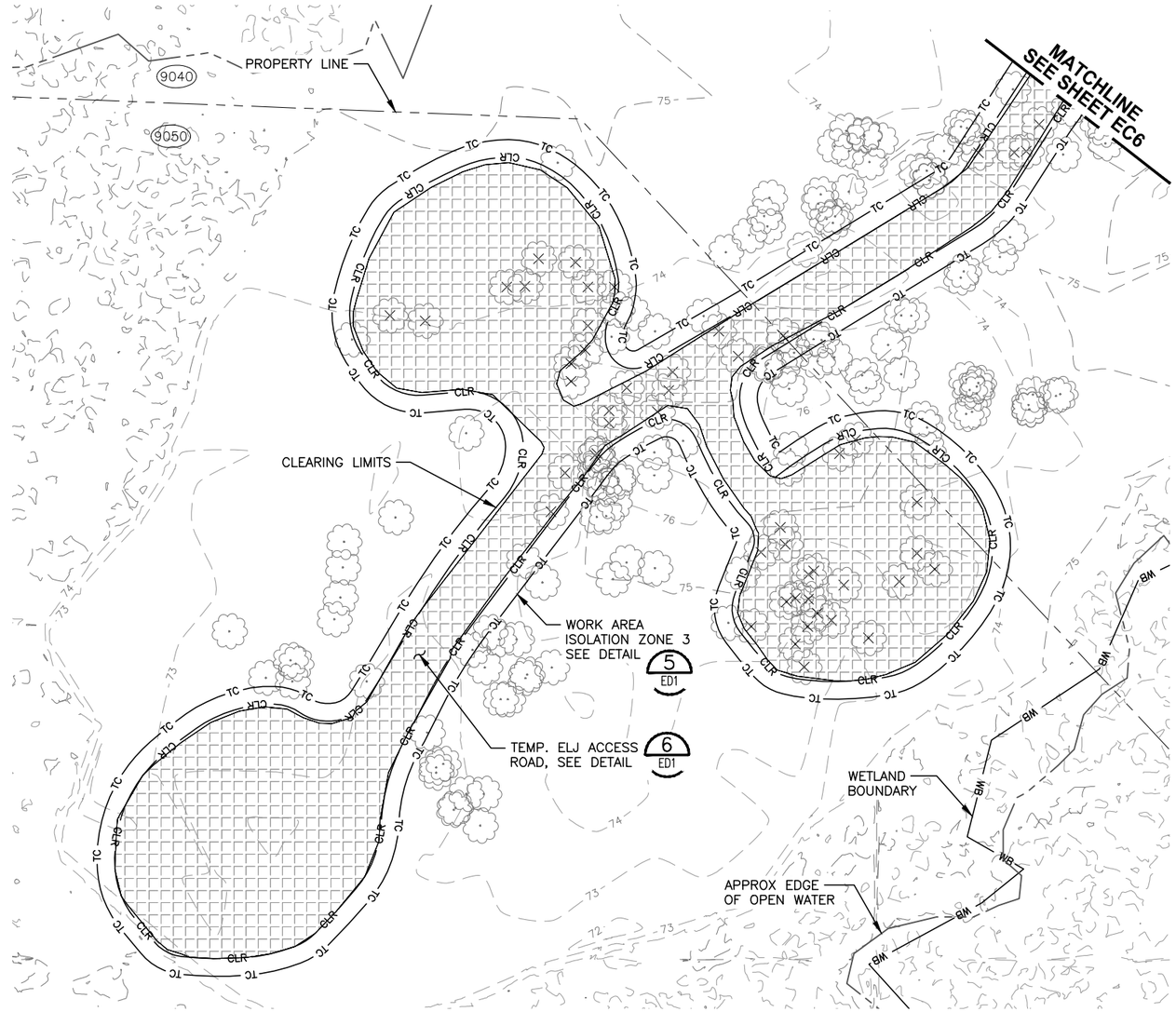

LEGEND:

- CLR — CLEARING LIMITS
- TC — TURBIDITY CURTAIN
- WB — WETLAND BOUNDARY
- EDGE OF OPEN WATER (APPROX.)
- TEMP. ELJ ACCESS ROAD AND WORK PLATFORM
- EXIST TREE TO BE PROTECTED
- EXIST TREE TO BE REMOVED

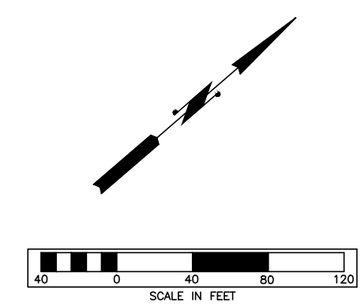

FIELD BOOK:
SURVEYED:
SURVEY BASE MAP:
CHECKED:

NUM.	REVISION	BY	DATE

APPROVED:	JEANNE STYPULA, PE	3-2016
PROJECT MANAGER:	CHRIS BRUMMER, PE	3-2016
DESIGNED:	CHRIS BRUMMER, PE	3-2016
ECOLOGIST:	STEPHANIE SHELTON	3-2016
DESIGN ENTERED:	HUE ONG	3-2016

SRFB # RCO 087-1910C

PROJECT No. 1112049 (FL9001)

CHRISTOPHER JON BRUMMER — STATE OF WASHINGTON — 40695 — REGISTERED PROFESSIONAL ENGINEER — 3/23/16

IAN B. MOSTERNAK — STATE OF WASHINGTON — 36069 — REGISTERED PROFESSIONAL ENGINEER — 03/23/16

King County
Department of Natural Resources and Parks
Water and Land Resources Division
River and Floodplain Management Section
Christie True, Director

COUNTYLINE LEVEE SETBACK

TESC AND SITE CLEARING PLAN

SHEET 17 OF 58 SHEETS

EC12

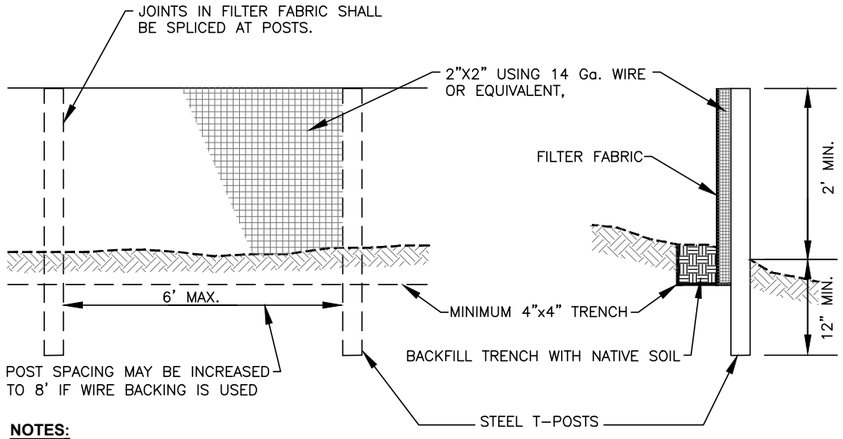

NOTES:

1. INSTALL SILT FENCE ALONG CONTOUR.

SILT FENCE AND WIRE BACKED SILT FENCE DETAIL (1)

NTS — EC SHEETS

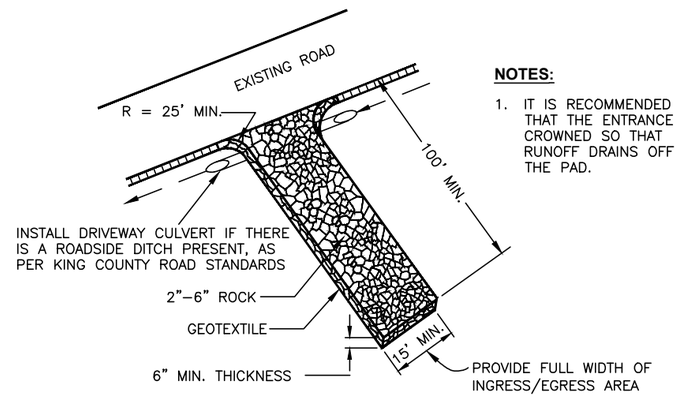

NOTES:

1. IT IS RECOMMENDED THAT THE ENTRANCE BE CROWNED SO THAT RUNOFF DRAINS OFF THE PAD.

TEMPORARY CONSTRUCTION ENTRANCE (2)

NTS

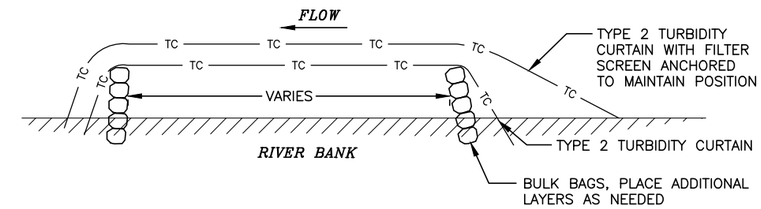

NOTES:

1. USE BULK BAGS AND DOUBLE TYPE 2 TURBIDITY CURTAIN AS SHOWN FOR WORK AREA ISOLATION ZONE 1 IN RIVER.
2. USE SINGLE LAYER TYPE 1 TURBIDITY CURTAIN FOR WORK AREA ISOLATION ZONES 2 AND 3 IN WETLAND.

IN WATER TURBIDITY CONTROL (5)

SCALE: NTS — EC SHEETS

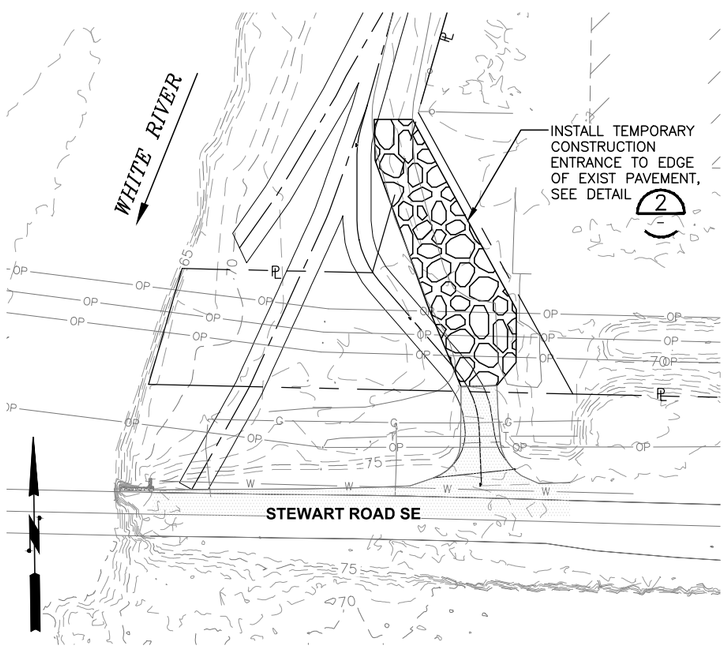

CONSTRUCTION ACCESS FROM STEWART ROAD SE (3)

EC1

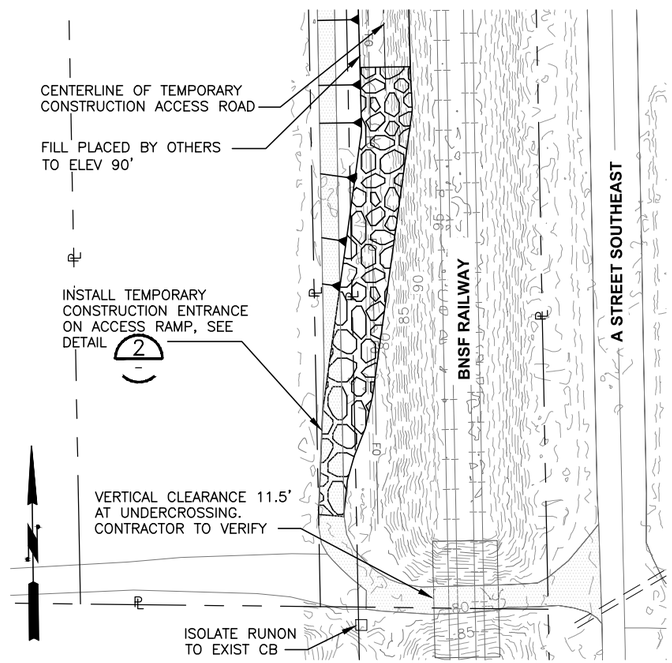

CONSTRUCTION ACCESS FROM A ST SE (4)

EC10

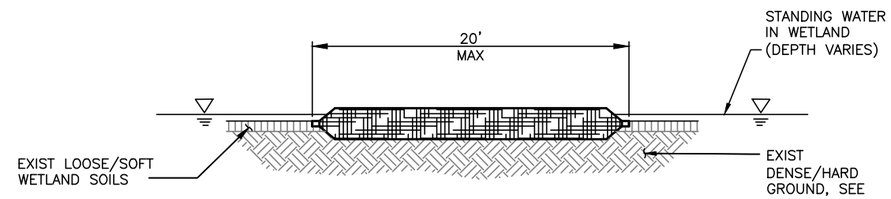

TEMPORARY ROCK ACCESS ROAD OPTION FOR APEX ELJs (6)

NTS — EC SHEETS

NOTES FOR TEMPORARY ACCESS ROAD TO APEX ELJs:

1. ACCESS ROAD TO BE ROUTED TO MINIMIZE VEGETATION DISTURBANCE AND FOREST CLEARING.
2. CONTRACTOR SHALL MARK CLEARING LIMITS WITH FLAGGING. CLEARING LIMITS TO BE APPROVED BY PROJECT REPRESENTATIVE BEFORE ANY CLEARING ACTIVITIES MAY BEGIN.

FIELD BOOK:
SURVEYED:
SURVEY BASE MAP:
CHECKED:

NUM.	REVISION	BY	DATE

APPROVED:	IAN MOSTRENKO, PE	3-2016
PROJECT MANAGER:	MARK EWBANK, PE	3-2016
DESIGNED:	BRIAN SCOTT	3-2016
ECOLOGIST:	STEPHANIE SHELTON	3-2016
DESIGN ENTERED:	L. TURNIDGE, E. MARSHALL	3-2016

SRFB # RCO 087-1910C

PROJECT No. 1112049 (FL9001)

IAN R. MOSTRENKO — STATE OF WASHINGTON — 36069 — REGISTERED PROFESSIONAL ENGINEER — 03/23/16

CHRISTOPHER JON KRAMER — STATE OF WASHINGTON — 40695 — REGISTERED PROFESSIONAL ENGINEER — 3/23/16

King County
Department of Natural Resources and Parks
Water and Land Resources Division
River and Floodplain Management Section
Christie True, Director

COUNTYLINE LEVEE SETBACK

TESC DETAILS

SHEET 18 OF 58 SHEETS

ED1

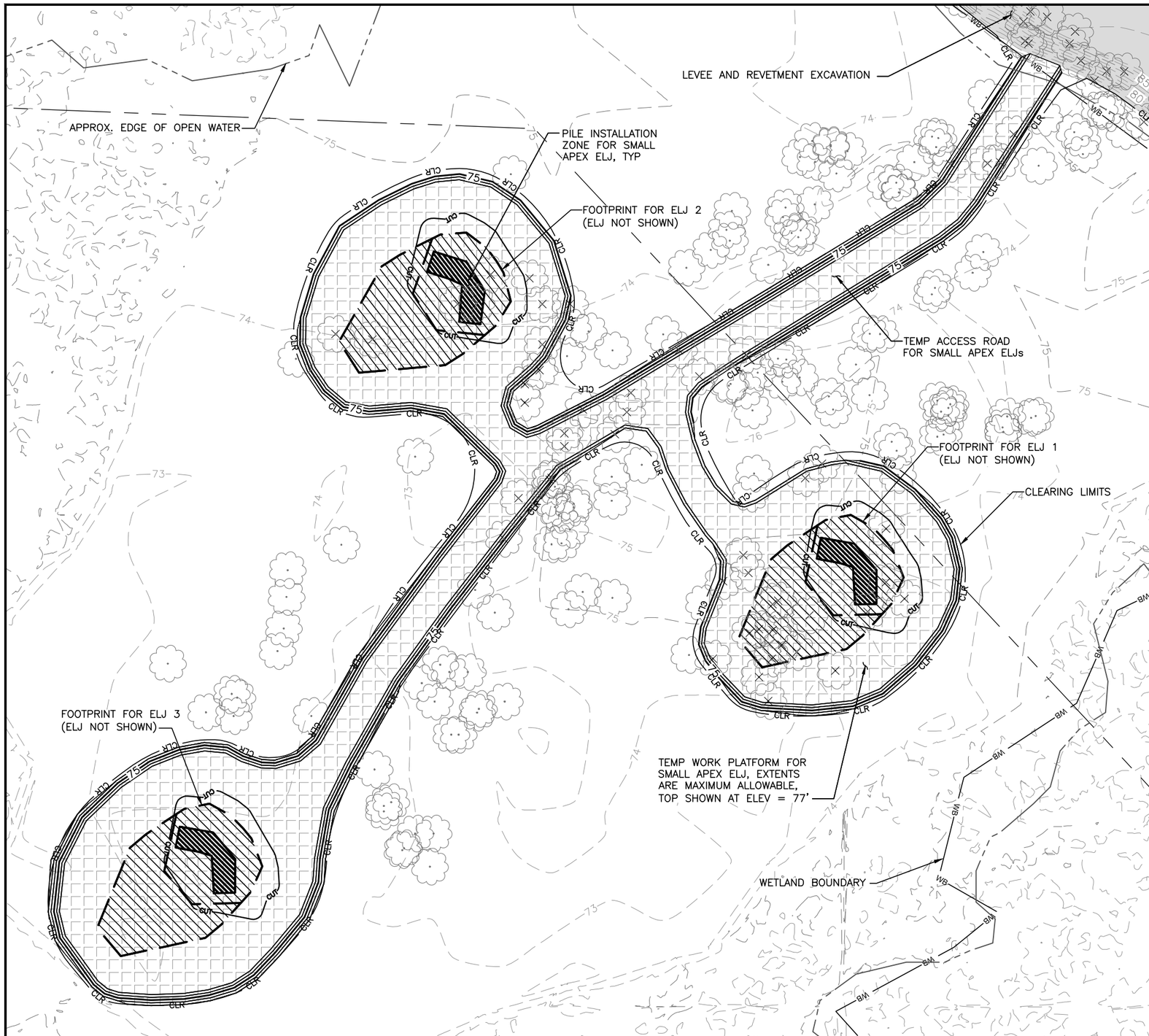

30 0 30 60 90
SCALE IN FEET

NOTES:

1. EXISTING WETLAND GROUND ELEVATIONS REPRESENT ELEVATIONS AT WHICH DENSE/HARD GROUND WAS ENCOUNTERED UNDER LOOSE/SOFT WETLAND SOILS WHICH VARY IN DEPTH. DURING 2015 TOPOGRAPHIC SURVEY, THICKNESS OF LOOSE/SOFT WETLAND SOILS WAS MEASURED BETWEEN 1' AND 3' THROUGHOUT WETLAND AREA SURVEYED.
2. WETLAND WATER SURFACE ELEVATION IN VICINITY OF ELJs 1, 2 AND 3 WAS APPROXIMATELY 75' DURING APRIL 2015 TOPOGRAPHIC SURVEY, BUT WILL VARY BASED ON TIME OF YEAR.
3. FOR ELJ PILE INSTALLATION AND ELJ CONSTRUCTION, CONSTRUCT TEMPORARY ACCESS ROAD AND WORK PLATFORM IN LOCATION SHOWN.
4. EXTENTS SHOWN FOR WORK PLATFORM AROUND ELJs AND TEMPORARY ACCESS ROAD IS THE MAXIMUM ALLOWED FILL AND DISTURBANCE EXTENTS. CONSTRUCT WORK PLATFORM AND TEMPORARY ACCESS ROAD WITHIN THE EXTENTS SHOWN TO COMPLETE ELJ CONSTRUCTION.
5. FOLLOWING PILE INSTALLATION, REMOVE OR EXCAVATE THROUGH THE WORK PLATFORM AS NEEDED TO COMPLETE ELJ CONSTRUCTION.

LEGEND:

- CLR — CLEARING LIMITS
- EDGE OF OPEN WATER (APPROX.)
- WB — WETLAND BOUNDARY
- CUT — ELJ EXCAVATION EXTENTS (APPROX.)
- 74 — EXIST 1' CONTOUR
- PROPOSED 1' MINOR CONTOUR FOR TEMP ACCESS ROAD AND ELJ WORK PLATFORM
- 75 — PROPOSED 5' MAJOR CONTOUR FOR TEMP ACCESS ROAD AND ELJ WORK PLATFORM
- LEVEE AND REVETMENT EXCAVATION
- TEMP ELJ ACCESS ROAD AND WORK PLATFORM
- ELJ FOOTPRINT
- ELJ PILE INSTALLATION ZONE
- EXIST TREE TO BE PROTECTED
- EXIST TREE TO BE REMOVED

FIELD BOOK:
SURVEYED:
SURVEY BASE MAP:
CHECKED:

NUM.	REVISION	BY	DATE

APPROVED:	IAN MOSTRENKO, PE	3-2016
PROJECT MANAGER:	MARK EWBANK, PE	3-2016
DESIGNED:	BRIAN SCOTT	3-2016
ECOLOGIST:	STEPHANIE SHELTON	3-2016
DESIGN ENTERED:	L. TURNIDGE, E. MARSHALL	3-2016

SRFB # RCO 087-1910C

PROJECT No. 1112049 (FL9001)

IAN R. MOSTRENKO, STATE OF WASHINGTON, 36069, REGISTERED PROFESSIONAL ENGINEER
03/23/16

HERRERA

King County
Department of Natural Resources and Parks
Water and Land Resources Division
River and Floodplain Management Section
Christie True, Director

COUNTYLINE LEVEE SETBACK

TEMPORARY ACCESS FOR ELJs 1, 2 AND 3

SHEET 19 OF 58 SHEETS

ED2

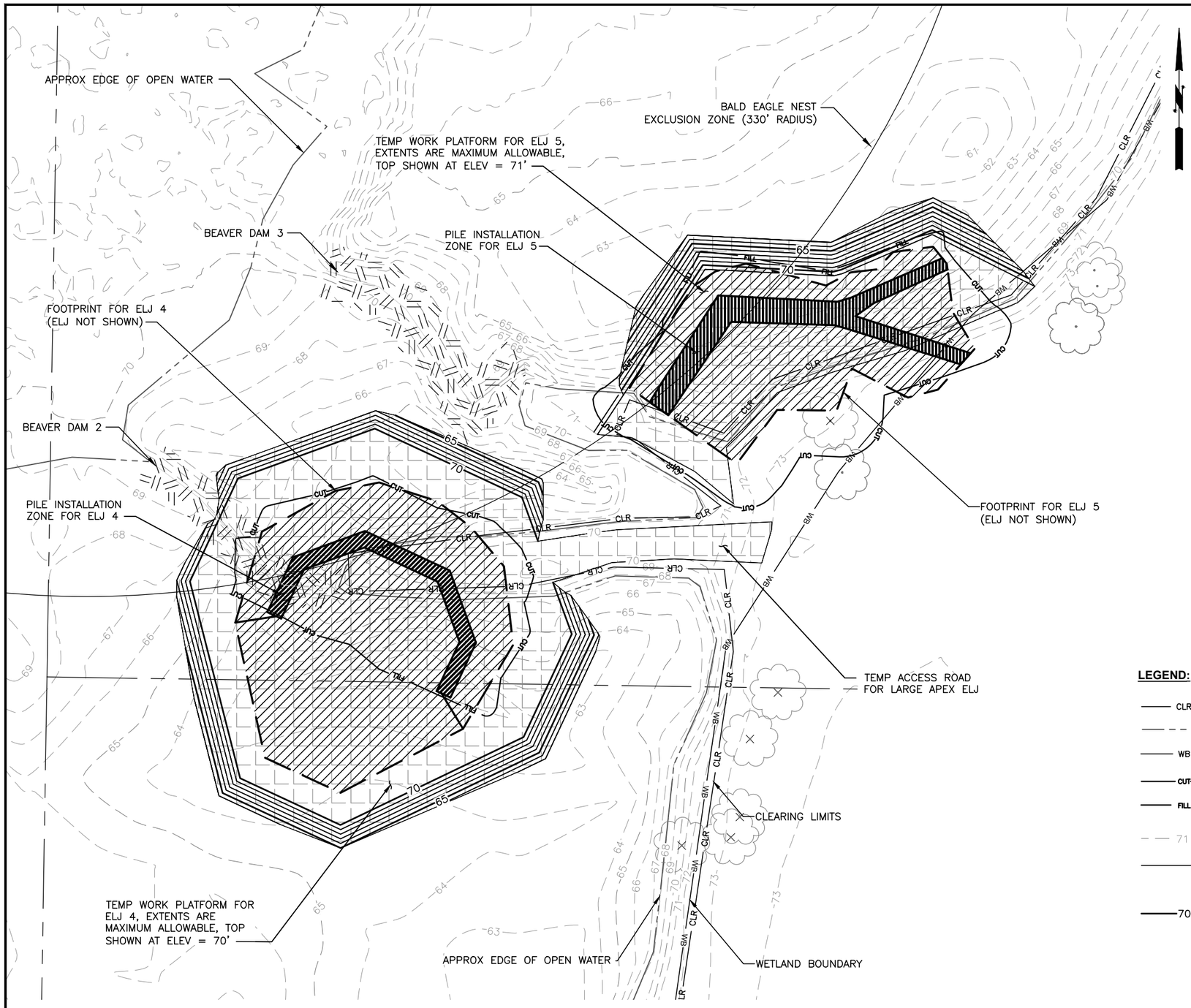

20 0 20 40 60
SCALE IN FEET

NOTES:

1. EXISTING WETLAND GROUND ELEVATIONS REPRESENT ELEVATIONS AT WHICH DENSE/HARD GROUND WAS ENCOUNTERED UNDER LOOSE/SOFT WETLAND SOILS WHICH VARY IN DEPTH. DURING 2015 TOPOGRAPHIC SURVEY, THICKNESS OF LOOSE/SOFT WETLAND SOILS WAS MEASURED BETWEEN 1' AND 3' THROUGHOUT WETLAND AREA SURVEYED.
2. WETLAND WATER SURFACE ELEVATION IN VICINITY OF ELJs 4 AND 5 WAS APPROXIMATELY 69' AND 70' RESPECTIVELY DURING APRIL 2015 TOPOGRAPHIC SURVEY, BUT WILL VARY BASED ON TIME OF YEAR.
3. FOR ELJ PILE INSTALLATION AND ELJ CONSTRUCTION CONSTRUCT TEMPORARY ACCESS ROAD AND WORK PLATFORM IN LOCATION SHOWN.
4. EXTENTS SHOWN FOR WORK PLATFORM AROUND ELJs AND TEMPORARY ACCESS ROAD IS THE MAXIMUM ALLOWED FILL AND DISTURBANCE EXTENTS. CONSTRUCT WORK PLATFORM AND TEMPORARY ACCESS ROAD WITHIN THE EXTENTS SHOWN AS NEEDED TO COMPLETE ELJ CONSTRUCTION.
5. FOLLOWING PILE INSTALLATION, EXCAVATE THROUGH THE WORK PLATFORM AS NEEDED TO COMPLETE ELJ CONSTRUCTION.
6. SEE SECTION 01 04 00 FOR WORK ACTIVITIES IMPACTING BEAVER DAMS.

LEGEND:

- CLR — CLEARING LIMITS
- EDGE OF OPEN WATER (APPROX.)
- WB — WETLAND BOUNDARY
- CUT — ELJ EXCAVATION EXTENTS (APPROX.)
- FILL — ELJ FILL EXTENTS TO ESTABLISH BOTTOM OF STRUCTURE ELEVATION
- 71 — EXIST 1' CONTOUR
- PROPOSED 1' MINOR CONTOUR FOR TEMP ACCESS ROAD AND ELJ WORK PLATFORM
- 70 — PROPOSED 5' MAJOR CONTOUR FOR TEMP ACCESS ROAD AND ELJ WORK PLATFORM
- TEMP ELJ ACCESS ROAD AND WORK PLATFORM
- ELJ FOOTPRINT
- ELJ PILE INSTALLATION ZONE
- EXIST BEAVER DAM
- EXIST TREE TO BE PROTECTED
- EXIST TREE TO BE REMOVED

FIELD BOOK:
SURVEYED:
SURVEY BASE MAP:
CHECKED:

NUM.	REVISION	BY	DATE

APPROVED:	IAN MOSTRENKO, PE	3-2016
PROJECT MANAGER:	MARK EWBANK, PE	3-2016
DESIGNED:	BRIAN SCOTT	3-2016
ECOLOGIST:	STEPHANIE SHELTON	3-2016
DESIGN ENTERED:	L. TURNIDGE, E. MARSHALL	3-2016

SRFB # RCO 087-1910C
PROJECT No. 1112049 (FL9001)

IAN B. MOSTRENKO STATE OF WASHINGTON 36069 REGISTERED PROFESSIONAL ENGINEER
03/23/16

HERRERA

King County
Department of Natural Resources and Parks
Water and Land Resources Division
River and Floodplain Management Section
Christie True, Director

COUNTYLINE LEVEE SETBACK

TEMPORARY ACCESS FOR ELJs 4 AND 5

SHEET 20 OF 58 SHEETS

ED3

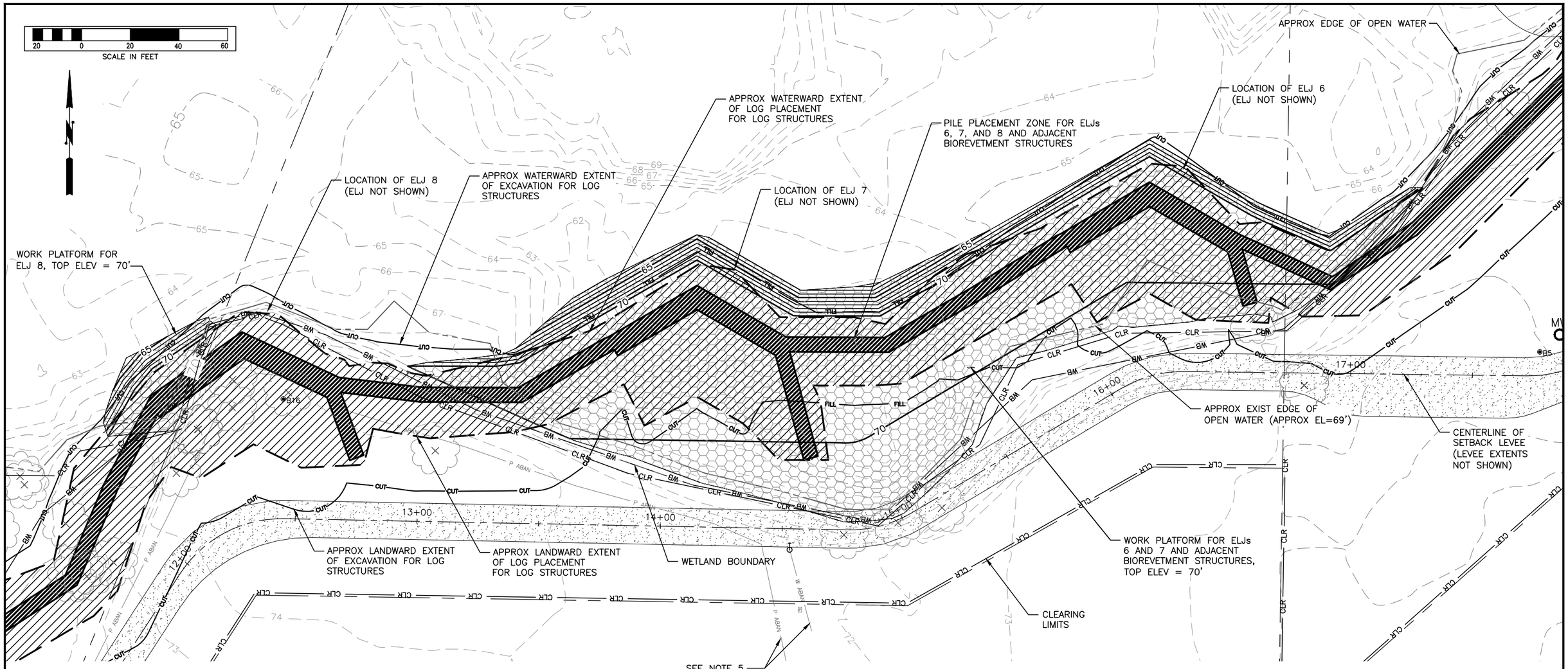

NOTES:

1. FOR TIMBER PILE INSTALLATION AND CONSTRUCTION OF ELJ AND BIOREVETMENT STRUCTURES, CONSTRUCT WORK PLATFORM USING LEVEE TOE ROCK AS SHOWN ON SD SHEETS. CONSTRUCT WORK PLATFORM ABOVE THE WATER SURFACE ELEVATION AS NEEDED TO DISPLACE STANDING WATER AND TO ALLOW WORK TO OCCUR IN THE DRY IN THE VICINITY OF ELJs 6, 7, AND 8.
2. USE THE SETBACK LEVEE AS A TEMPORARY ACCESS ROAD AND STAGING AREA TO CONSTRUCT ELJs 6, 7, AND 8, AND ADJACENT BIOREVETMENT STRUCTURES.
3. EXTENTS OF WORK PLATFORM SHOWN AROUND STRUCTURES IS THE MAXIMUM ALLOWED. CONSTRUCT WORK PLATFORM WITHIN EXTENTS SHOWN AS NEEDED TO COMPLETE CONSTRUCTION.
4. FOLLOWING PILE INSTALLATION, EXCAVATE THROUGH WORK PLATFORM AS NEEDED TO COMPLETE STRUCTURE CONSTRUCTION.
5. VERIFY LOCATION OF ABANDONED UTILITIES AND CUT AND CAP AT PROPERTY LINE AND REMOVE DURING CLEARING.

LEGEND:

- CLR — CLEARING LIMITS
- EDGE OF OPEN WATER (APPROX.)
- WB — WETLAND BOUNDARY
- CUT — ELJ EXCAVATION EXTENTS (APPROX.)
- FILL — ELJ FILL EXTENTS TO ESTABLISH BOTTOM OF STRUCTURE ELEVATION
- 67 — EXIST 1' CONTOUR
- PROPOSED 1' MINOR CONTOUR FOR TEMP ACCESS ROAD AND ELJ WORK PLATFORM
- 70 — PROPOSED 5' MAJOR CONTOUR FOR TEMP ACCESS ROAD AND ELJ WORK PLATFORM
- LEVEE TOE ROCK USED FOR ELJ WORK PLATFORM
- ELJ FOOTPRINT
- ELJ PILE INSTALLATION ZONE
- 14+00 — ACCESS ROAD ALONG CENTERLINE OF LEVEE
- EXIST TREE TO BE PROTECTED
- EXIST TREE TO BE REMOVED

FIELD BOOK:
SURVEYED:
SURVEY BASE MAP:
CHECKED:

NUM.	REVISION	BY	DATE

APPROVED:	IAN MOSTRENKO, PE	3-2016
PROJECT MANAGER:	MARK EWBANK, PE	3-2016
DESIGNED:	BRIAN SCOTT	3-2016
ECOLOGIST:	STEPHANIE SHELTON	3-2016
DESIGN ENTERED:	L. TURNIDGE, E. MARSHALL	3-2016

SRFB # RCO 087-1910C

PROJECT No. 1112049 (FL9001)

IAN B. MOSTRENKO — STATE OF WASHINGTON — 36069 — REGISTERED PROFESSIONAL ENGINEER
03/23/16

HERRERA

King County
Department of Natural Resources and Parks
Water and Land Resources Division
River and Floodplain Management Section
Christie True, Director

COUNTYLINE LEVEE SETBACK

TEMPORARY ACCESS FOR ELJs 6, 7 AND 8

SHEET 21 OF 58 SHEETS

ED4

NOTES:

1. SEE DWG WD9 FOR COORDINATES OF BIOREVETMENT STRUCTURES.

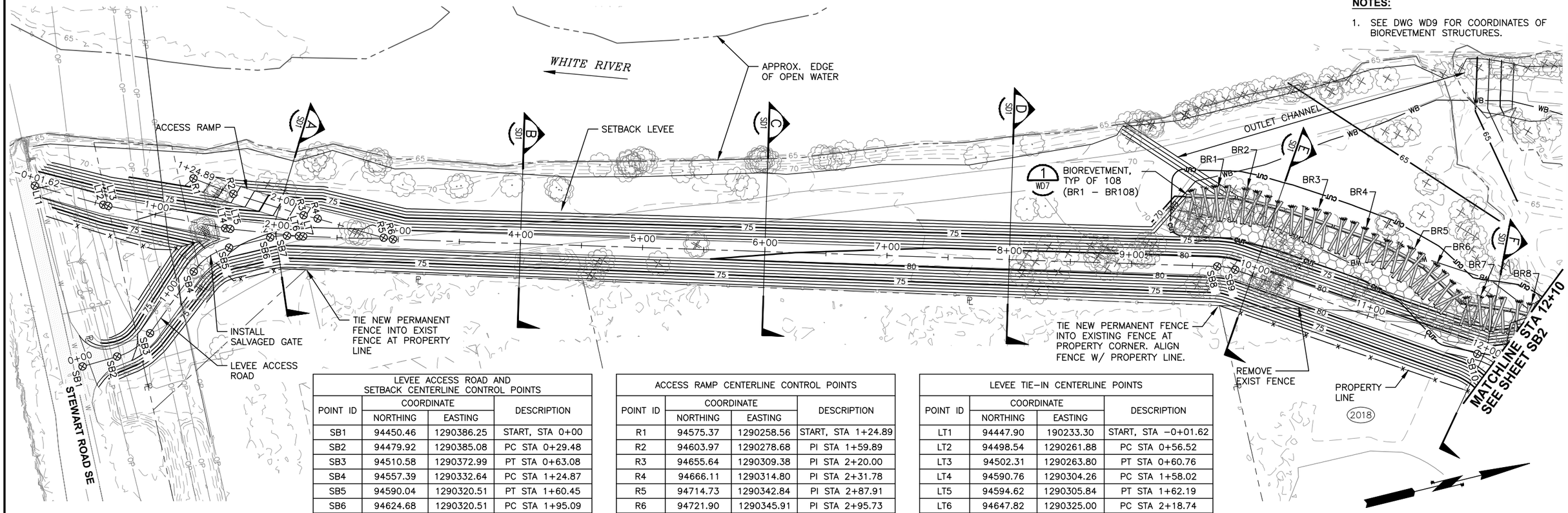

LEVEE ACCESS ROAD AND SETBACK CENTERLINE CONTROL POINTS			
POINT ID	COORDINATE		DESCRIPTION
	NORTHING	EASTING	
SB1	94450.46	1290386.25	START, STA 0+00
SB2	94479.92	1290385.08	PC STA 0+29.48
SB3	94510.58	1290372.99	PT STA 0+63.08
SB4	94557.39	1290332.64	PC STA 1+24.87
SB5	94590.04	1290320.51	PT STA 1+60.45
SB6	94624.68	1290320.51	PC STA 1+95.09
SB7	94638.40	1290322.43	PT STA 2+08.99
SB8	95371.16	1290528.51	PC STA 9+70.19
SB9	95384.87	1290534.72	PT STA 9+85.29
SB10	95560.55	1290648.89	PC STA 11+94.81

ACCESS RAMP CENTERLINE CONTROL POINTS			
POINT ID	COORDINATE		DESCRIPTION
	NORTHING	EASTING	
R1	94575.37	1290258.56	START, STA 1+24.89
R2	94603.97	1290278.68	PI STA 1+59.89
R3	94655.64	1290309.38	PI STA 2+20.00
R4	94666.11	1290314.80	PI STA 2+31.78
R5	94714.73	1290342.84	PI STA 2+87.91
R6	94721.90	1290345.91	PI STA 2+95.73

LEVEE TIE–IN CENTERLINE POINTS			
POINT ID	COORDINATE		DESCRIPTION
	NORTHING	EASTING	
LT1	94447.90	190233.30	START, STA –0+01.62
LT2	94498.54	1290261.88	PC STA 0+56.52
LT3	94502.31	1290263.80	PT STA 0+60.76
LT4	94590.76	1290304.26	PC STA 1+58.02
LT5	94594.62	1290305.84	PT STA 1+62.19
LT6	94647.82	1290325.00	PC STA 2+18.74
LT7	94651.04	1290326.04	PT STA 2+22.13

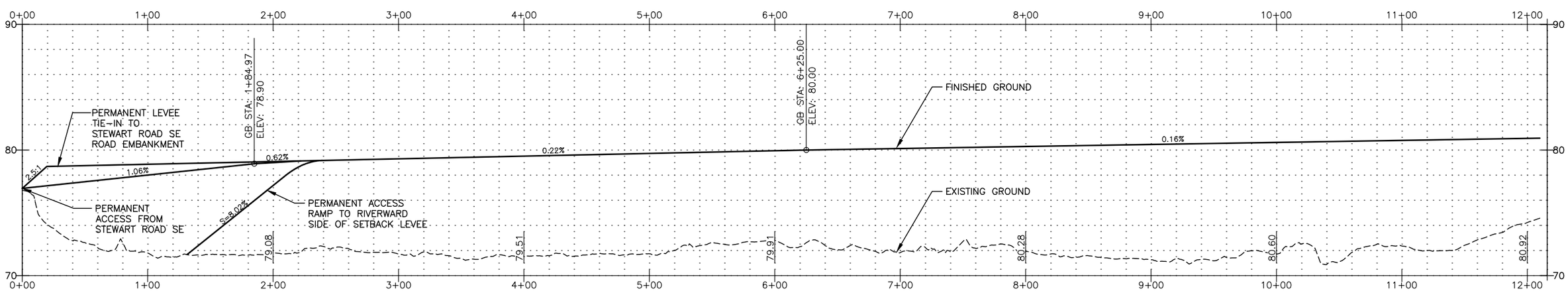

FIELD BOOK:
SURVEYED:
SURVEY BASE MAP:
CHECKED:

NUM.	REVISION	BY	DATE

APPROVED:	JEANNE STYPULA, PE	3–2016
PROJECT MANAGER:	CHRIS BRUMMER, PE	3–2016
DESIGNED:	CHRIS BRUMMER, PE	3–2016
ECOLOGIST:	STEPHANIE SHELTON	3–2016
DESIGN ENTERED:	HUE ONG	3–2016

SRFB # RCO 087–1910C

PROJECT No. 1112049 (FL9001)

CHRISTOPHER JON BRUMMER — STATE OF WASHINGTON — 40695 — REGISTERED PROFESSIONAL ENGINEER — 3/23/16

IAN D. MOSTRAM — STATE OF WASHINGTON — 36069 — REGISTERED PROFESSIONAL ENGINEER — 03/23/16

King County
Department of Natural Resources and Parks
Water and Land Resources Division
River and Floodplain Management Section
Christie True, Director

COUNTYLINE LEVEE SETBACK

SITE PLAN AND PROFILE FOR SETBACK LEVEE AND ENGINEERED LOG STRUCTURES

SHEET 22 OF 58 SHEETS

SB1

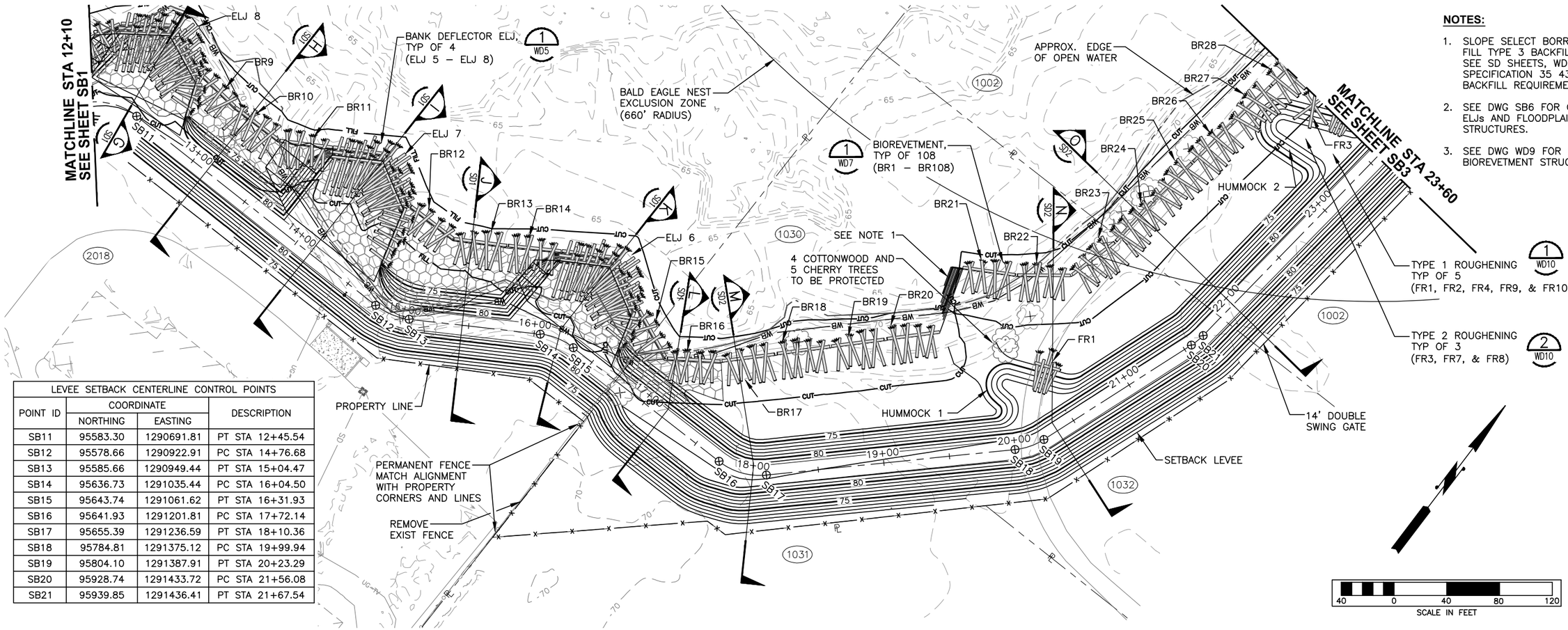

NOTES:

1. SLOPE SELECT BORROW OR SELECT FILL TYPE 3 BACKFILL AT 1H:1V. SEE SD SHEETS, WD7 AND SPECIFICATION 35 43 20 FOR BACKFILL REQUIREMENTS.
2. SEE DWG SB6 FOR COORDINATES OF ELJs AND FLOODPLAIN ROUGHENING STRUCTURES.
3. SEE DWG WD9 FOR COORDINATES OF BIOREVETMENT STRUCTURES.

LEVEE SETBACK CENTERLINE CONTROL POINTS			
POINT ID	COORDINATE		DESCRIPTION
	NORTHING	EASTING	
SB11	95583.30	1290691.81	PT STA 12+45.54
SB12	95578.66	1290922.91	PC STA 14+76.68
SB13	95585.66	1290949.44	PT STA 15+04.47
SB14	95636.73	1291035.44	PC STA 16+04.50
SB15	95643.74	1291061.62	PT STA 16+31.93
SB16	95641.93	1291201.81	PC STA 17+72.14
SB17	95655.39	1291236.59	PT STA 18+10.36
SB18	95784.81	1291375.12	PC STA 19+99.94
SB19	95804.10	1291387.91	PT STA 20+23.29
SB20	95928.74	1291433.72	PC STA 21+56.08
SB21	95939.85	1291436.41	PT STA 21+67.54

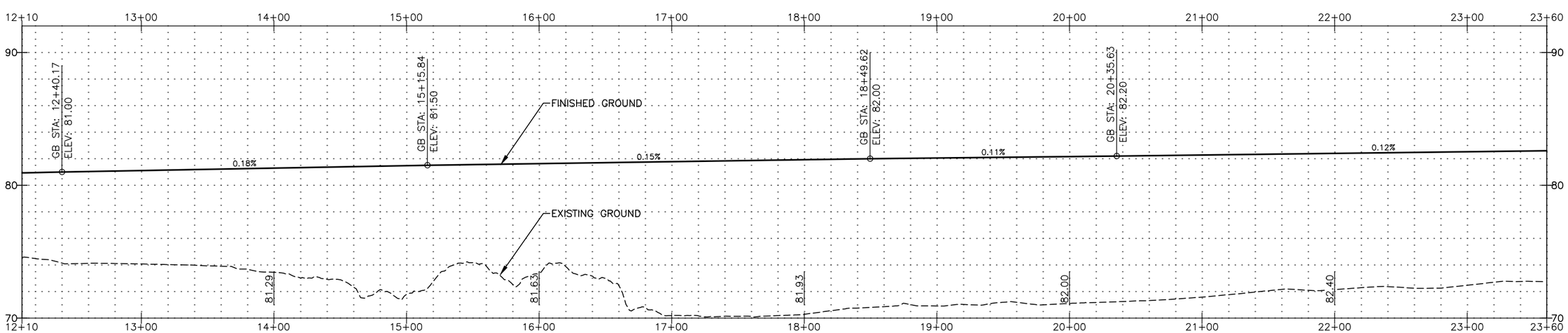

FIELD BOOK:			
SURVEYED:			
SURVEY BASE MAP:			
CHECKED:			

NUM.	REVISION	BY	DATE

APPROVED:	JEANNE STYPULA, PE	3–2016
PROJECT MANAGER:	CHRIS BRUMMER, PE	3–2016
DESIGNED:	CHRIS BRUMMER, PE	3–2016
ECOLOGIST:	STEPHANIE SHELTON	3–2016
DESIGN ENTERED:	HUE ONG	3–2016

SRFB # RCO 087–1910C

PROJECT No. 1112049 (FL9001)

CHRISTOPHER JON BRUMMER — STATE OF WASHINGTON — 40695 — REGISTERED PROFESSIONAL ENGINEER — 3/23/16

IAN B. MOSTRENKO — STATE OF WASHINGTON — 36069 — REGISTERED PROFESSIONAL ENGINEER — 03/23/16

King County
Department of Natural Resources and Parks
Water and Land Resources Division
River and Floodplain Management Section
Christie True, Director

COUNTYLINE LEVEE SETBACK

SITE PLAN AND PROFILE FOR SETBACK LEVEE AND ENGINEERED LOG STRUCTURES

SHEET 23 OF 58 SHEETS

SB2

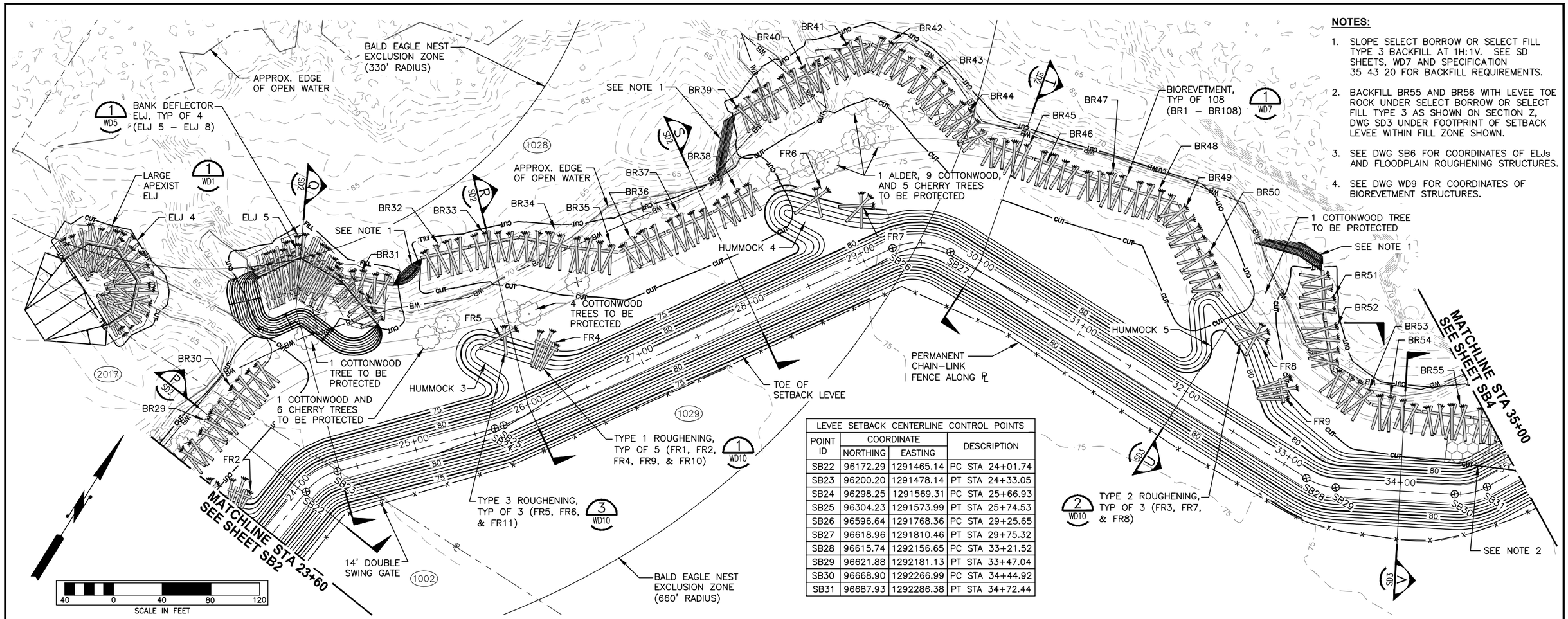

NOTES:

1. SLOPE SELECT BORROW OR SELECT FILL TYPE 3 BACKFILL AT 1H:1V. SEE SD SHEETS, WD7 AND SPECIFICATION 35 43 20 FOR BACKFILL REQUIREMENTS.
2. BACKFILL BR55 AND BR56 WITH LEVEE TOE ROCK UNDER SELECT BORROW OR SELECT FILL TYPE 3 AS SHOWN ON SECTION Z, DWG SD3 UNDER FOOTPRINT OF SETBACK LEVEE WITHIN FILL ZONE SHOWN.
3. SEE DWG SB6 FOR COORDINATES OF ELJs AND FLOODPLAIN ROUGHENING STRUCTURES.
4. SEE DWG WD9 FOR COORDINATES OF BIOREVETMENT STRUCTURES.

LEVEE SETBACK CENTERLINE CONTROL POINTS			
POINT ID	COORDINATE		DESCRIPTION
	NORTHING	EASTING	
SB22	96172.29	1291465.14	PC STA 24+01.74
SB23	96200.20	1291478.14	PT STA 24+33.05
SB24	96298.25	1291569.31	PC STA 25+66.93
SB25	96304.23	1291573.99	PT STA 25+74.53
SB26	96596.64	1291768.36	PC STA 29+25.65
SB27	96618.96	1291810.46	PT STA 29+75.32
SB28	96615.74	1292156.65	PC STA 33+21.52
SB29	96621.88	1292181.13	PT STA 33+47.04
SB30	96668.90	1292266.99	PC STA 34+44.92
SB31	96687.93	1292286.38	PT STA 34+72.44

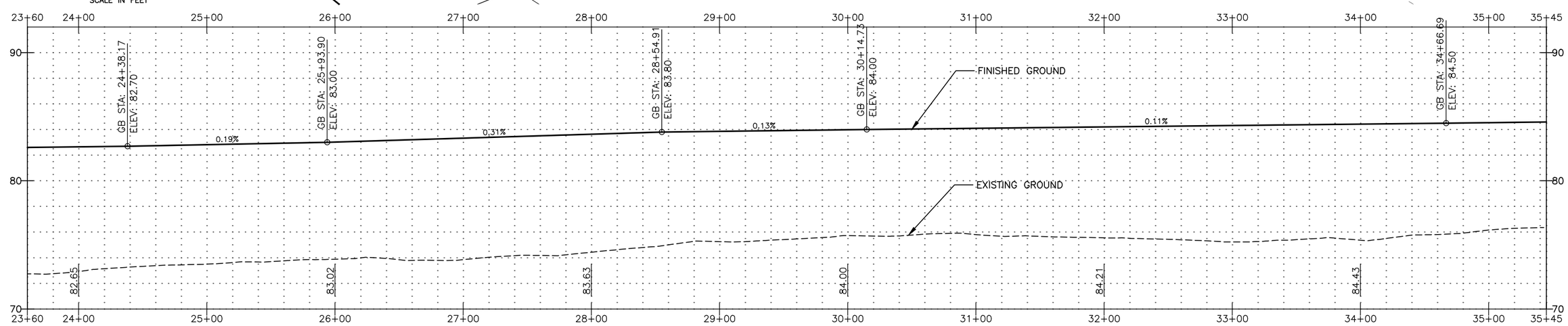

FIELD BOOK:
SURVEYED:
SURVEY BASE MAP:
CHECKED:

NUM.	REVISION	BY	DATE

APPROVED:	JEANNE STYPULA, PE	3–2016
PROJECT MANAGER:	CHRIS BRUMMER, PE	3–2016
DESIGNED:	CHRIS BRUMMER, PE	3–2016
ECOLOGIST:	STEPHANIE SHELTON	3–2016
DESIGN ENTERED:	HUE ONG	3–2016

SRFB # RCO 087–1910C

PROJECT No. 1112049 (FL9001)

CHRISTOPHER JON BRUMMER STATE OF WASHINGTON 40695 REGISTERED PROFESSIONAL ENGINEER 3/23/16

JAMES B. MOSTRAM STATE OF WASHINGTON 36069 REGISTERED PROFESSIONAL ENGINEER 03/23/16

King County
Department of Natural Resources and Parks
Water and Land Resources Division
River and Floodplain Management Section
Christie True, Director

COUNTYLINE LEVEE SETBACK

SITE PLAN AND PROFILE FOR SETBACK LEVEE AND ENGINEERED LOG STRUCTURES

SHEET 24 OF 58 SHEETS

SB3

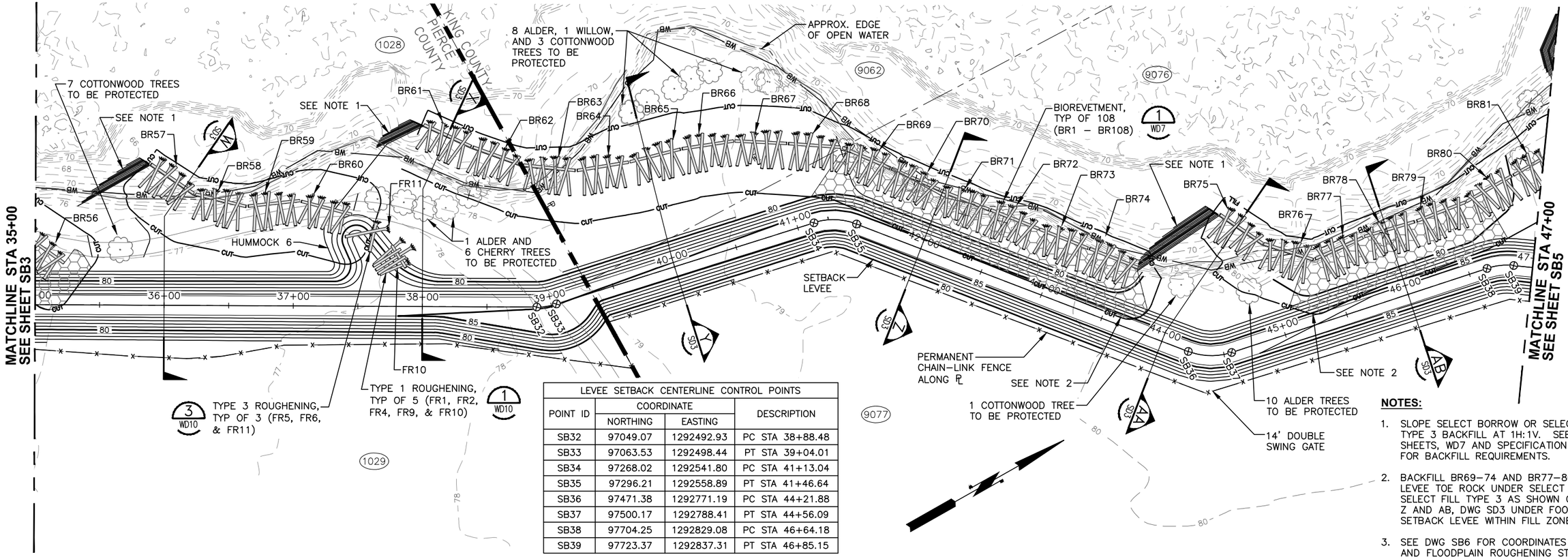

LEVEE SETBACK CENTERLINE CONTROL POINTS			
POINT ID	COORDINATE		DESCRIPTION
	NORTHING	EASTING	
SB32	97049.07	1292492.93	PC STA 38+88.48
SB33	97063.53	1292498.44	PT STA 39+04.01
SB34	97268.02	1292541.80	PC STA 41+13.04
SB35	97296.21	1292558.89	PT STA 41+46.64
SB36	97471.38	1292771.19	PC STA 44+21.88
SB37	97500.17	1292788.41	PT STA 44+56.09
SB38	97704.25	1292829.08	PC STA 46+64.18
SB39	97723.37	1292837.31	PT STA 46+85.15

NOTES:

1. SLOPE SELECT BORROW OR SELECT FILL TYPE 3 BACKFILL AT 1H:1V. SEE SD SHEETS, WD7 AND SPECIFICATION 35 43 20 FOR BACKFILL REQUIREMENTS.
2. BACKFILL BR69–74 AND BR77–80 WITH LEVEE TOE ROCK UNDER SELECT BORROW OR SELECT FILL TYPE 3 AS SHOWN ON SECTION Z AND AB, DWG SD3 UNDER FOOTPRINT OF SETBACK LEVEE WITHIN FILL ZONE SHOWN.
3. SEE DWG SB6 FOR COORDINATES OF ELJs AND FLOODPLAIN ROUGHENING STRUCTURES.
4. SEE DWG WD9 FOR COORDINATES OF BIOREVETMENT STRUCTURES.

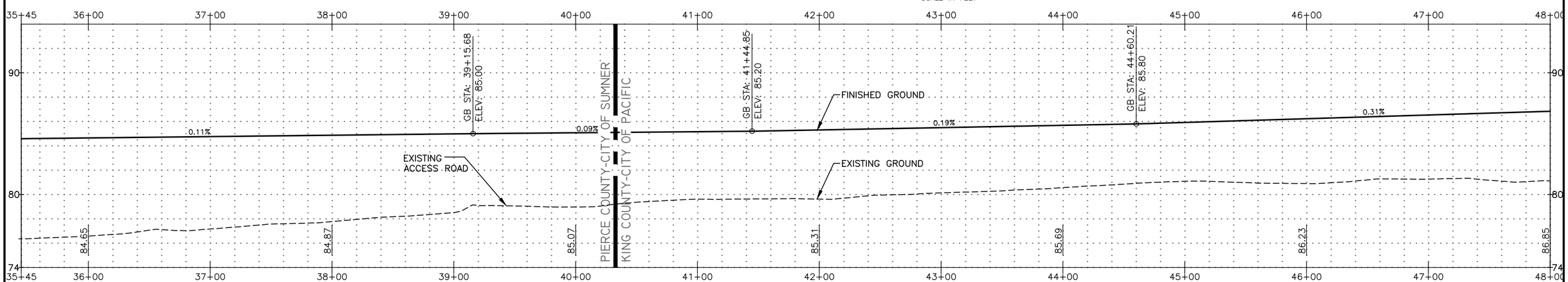

FIELD BOOK:
SURVEYED:
SURVEY BASE MAP:
CHECKED:

NUM.	REVISION	BY	DATE

APPROVED:	JEANNE STYPULA, PE	3–2016
PROJECT MANAGER:	CHRIS BRUMMER, PE	3–2016
DESIGNED:	CHRIS BRUMMER, PE	3–2016
ECOLOGIST:	STEPHANIE SHELTON	3–2016
DESIGN ENTERED:	HUE ONG	3–2016

SRFB # RCO 087–1910C

PROJECT No. 1112049 (FL9001)

CHRISTOPHER JON BRUMMER, STATE OF WASHINGTON, 40695, REGISTERED PROFESSIONAL ENGINEER, 3/23/16

IAN P. MOSTERMAN, STATE OF WASHINGTON, 36069, REGISTERED PROFESSIONAL ENGINEER, 03/23/16

King County
Department of Natural Resources and Parks
Water and Land Resources Division
River and Floodplain Management Section
Christie True, Director

COUNTYLINE LEVEE SETBACK

SITE PLAN AND PROFILE FOR SETBACK LEVEE AND ENGINEERED LOG STRUCTURES

SHEET 25 OF 58 SHEETS

SB4

NOTES:

1. SLOPE SELECT BORROW OR SELECT FILL TYPE 3 BACKFILL AT 1H:1V. SEE SD SHEETS, WD7 AND SPECIFICATION 35 43 20 FOR BACKFILL REQUIREMENTS.
2. BACKFILL BR94–97 AND BR100 WITH LEVEE TOE ROCK UNDER SELECT BORROW OR SELECT FILL TYPE 3 AS SHOWN ON SECTION AE, DWG SD4 UNDER FOOTPRINT OF SETBACK LEVEE WITHIN FILL ZONE SHOWN.
3. SEE DWG WD9 FOR COORDINATES OF BIOREVETMENT STRUCTURES.

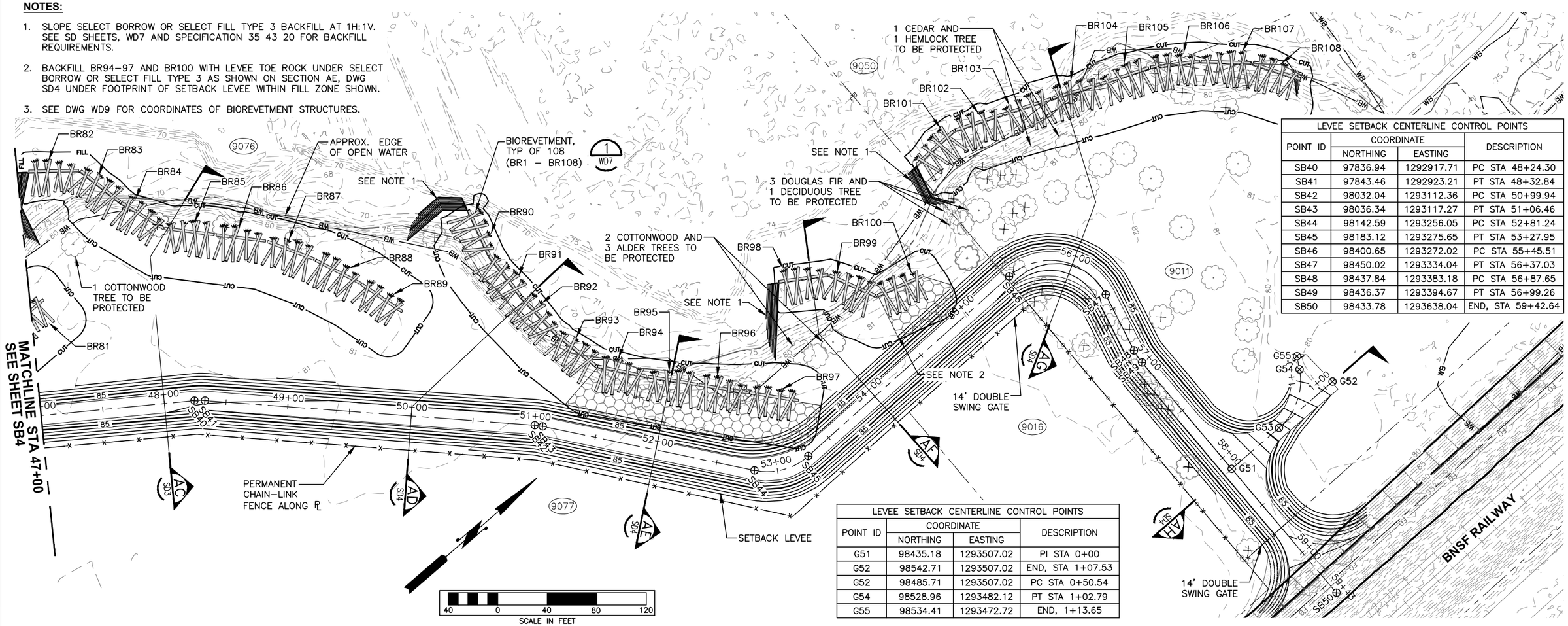

LEVEE SETBACK CENTERLINE CONTROL POINTS			
POINT ID	COORDINATE		DESCRIPTION
	NORTHING	EASTING	
SB40	97836.94	1292917.71	PC STA 48+24.30
SB41	97843.46	1292923.21	PT STA 48+32.84
SB42	98032.04	1293112.36	PC STA 50+99.94
SB43	98036.34	1293117.27	PT STA 51+06.46
SB44	98142.59	1293256.05	PC STA 52+81.24
SB45	98183.12	1293275.65	PT STA 53+27.95
SB46	98400.65	1293272.02	PC STA 55+45.51
SB47	98450.02	1293334.04	PT STA 56+37.03
SB48	98437.84	1293383.18	PC STA 56+87.65
SB49	98436.37	1293394.67	PT STA 56+99.26
SB50	98433.78	1293638.04	END, STA 59+42.64

LEVEE SETBACK CENTERLINE CONTROL POINTS			
POINT ID	COORDINATE		DESCRIPTION
	NORTHING	EASTING	
G51	98435.18	1293507.02	PI STA 0+00
G52	98542.71	1293507.02	END, STA 1+07.53
G52	98485.71	1293507.02	PC STA 0+50.54
G54	98528.96	1293482.12	PT STA 1+02.79
G55	98534.41	1293472.72	END, 1+13.65

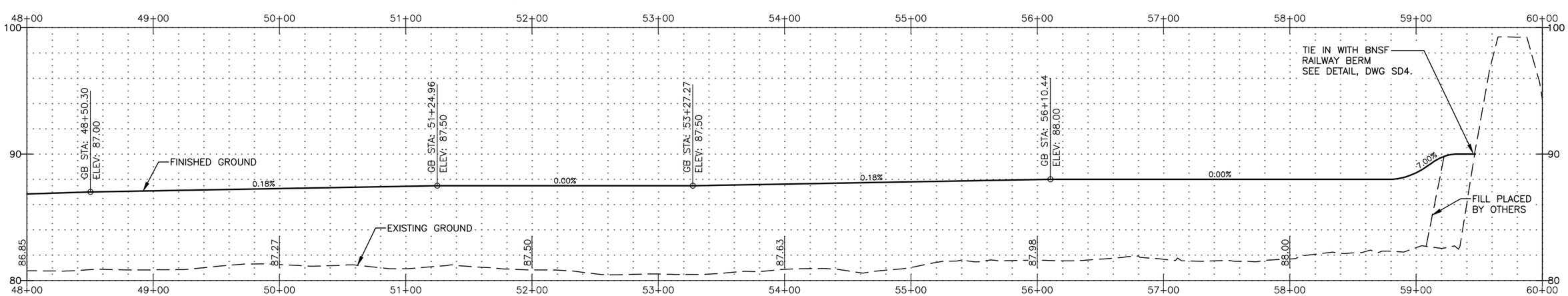

FIELD BOOK:
SURVEYED:
SURVEY BASE MAP:
CHECKED:

NUM.	REVISION	BY	DATE

APPROVED:	JEANNE STYPULA, PE	3–2016
PROJECT MANAGER:	CHRIS BRUMMER, PE	3–2016
DESIGNED:	CHRIS BRUMMER, PE	3–2016
ECOLOGIST:	STEPHANIE SHELTON	3–2016
DESIGN ENTERED:	HUE ONG	3–2016

SRFB # RCO 087–1910C

PROJECT No. 1112049 (FL9001)

CHRISTOPHER JON BRUMMER — STATE OF WASHINGTON — 40695 — REGISTERED PROFESSIONAL ENGINEER — 3/23/16

IAN B MOSTRANDT — STATE OF WASHINGTON — 36069 — REGISTERED PROFESSIONAL ENGINEER — 03/23/16

King County
Department of Natural Resources and Parks
Water and Land Resources Division
River and Floodplain Management Section
Christie True, Director

COUNTYLINE LEVEE SETBACK

SITE PLAN AND PROFILE FOR SETBACK LEVEE AND ENGINEERED LOG STRUCTURES

SHEET 26 OF 58 SHEETS

SB5

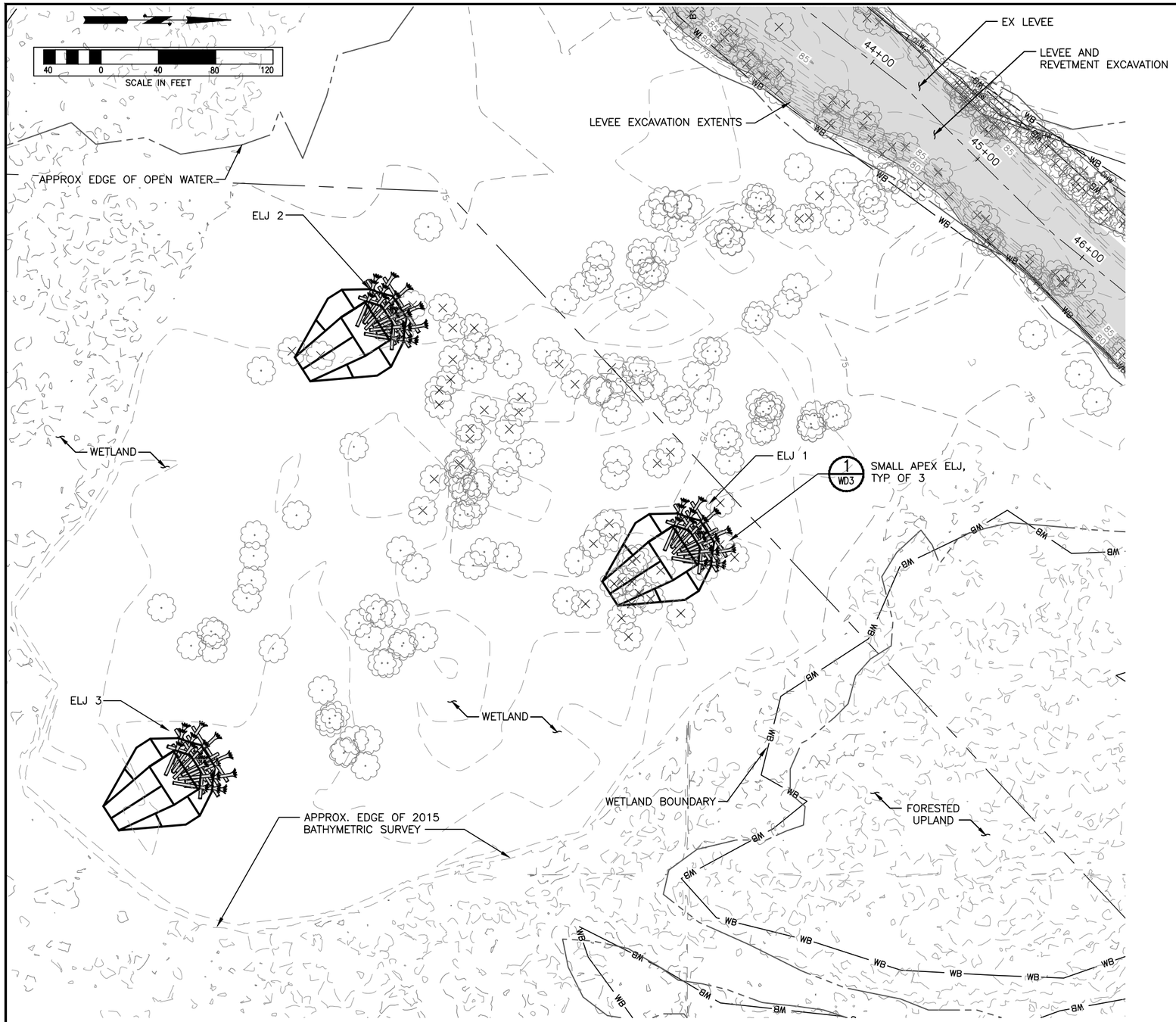

LEGEND:

- LEVEE AND REVETMENT EXCAVATION
- EDGE OF OPEN WATER (APPROX.)
- WB — WETLAND BOUNDARY
- EXIST TREE TO BE PROTECTED
- EXIST TREE TO BE REMOVED

NOTES FOR ELJs 1-8:

1. SEE ELJ LAYERING PLANS FOR LOCATION OF CONTROL POINTS ON EACH ELJ.
2. TEMPORARY ACCESS PATH TO ELJs 1–4 SHOWN ON DWGS ED2 AND ED3.
3. WORK PLATFORM FOR ELJs 1–8 SHOWN ON DWGS ED2–ED4.

ELJ AND FLOODPLAIN ROUGHENING CONTROL POINT TABLE:

ITEM	CP	NORTHING	EASTING	LOG STRUCTURE TYPE
ELJ 1	1	99008.88	1292752.70	SMALL APEX ELJ
	2	99018.60	1292767.84	
ELJ 2	1	98794.33	1292596.29	SMALL APEX ELJ
	2	98804.05	1292611.44	
ELJ 3	1	98660.82	1292909.39	SMALL APEX ELJ
	2	98670.54	1292924.54	
ELJ 4	1	96260.67	1291232.58	LARGE APEX ELJ
	2	96250.52	1291254.33	
ELJ 5	1	96312.39	1291334.39	BANK DEFLECTOR ELJ
	2	96343.13	1291354.35	
	3	96340.92	1291396.46	
	4	96329.67	1291410.78	
	5	96324.10	1291427.89	
ELJ 6	1	95702.07	1291015.33	BANK DEFLECTOR ELJ
	2	95720.39	1291047.07	
	3	95699.31	1291083.59	
	4	95689.48	1291081.57	
	5	95672.08	1291086.18	
ELJ 7	1	95659.64	1290829.53	BANK DEFLECTOR ELJ
	2	95677.97	1290861.27	
	3	95656.88	1290897.79	
	4	95647.05	1290895.77	
	5	95629.66	1290900.43	
ELJ 8	1	95637.47	1290644.45	BANK DEFLECTOR ELJ
	2	95658.49	1290674.47	
	3	95640.67	1290712.69	
	4	95630.70	1290711.53	
	5	95613.76	1290717.64	
FR1	1	95849.75	1291356.25	TYPE 1 ROUGHENING
FR2	1	96142.12	1291419.07	TYPE 1 ROUGHENING
FR3	1	96129.97	1291397.12	TYPE 2 ROUGHENING
FR4	1	96378.47	1291568.87	TYPE 1 ROUGHENING
FR5	1	96367.45	1291535.41	TYPE 3 ROUGHENING
FR6	1	96599.41	1291693.85	TYPE 3 ROUGHENING
FR7	1	96612.70	1291728.18	TYPE 2 ROUGHENING
FR8	1	96693.24	1292059.70	TYPE 2 ROUGHENING
FR9	1	96666.56	1292101.08	TYPE 1 ROUGHENING
FR10	1	96975.47	1292405.90	TYPE 1 ROUGHENING
FR11	1	96968.67	1292379.78	TYPE 3 ROUGHENING

FIELD BOOK:
SURVEYED:
SURVEY BASE MAP:
CHECKED:

NUM.	REVISION	BY	DATE

APPROVED:	IAN MOSTRENKO, PE	3–2016
PROJECT MANAGER:	MARK EWBANK, PE	3–2016
DESIGNED:	BRIAN SCOTT	3–2016
ECOLOGIST:	STEPHANIE SHELTON	3–2016
DESIGN ENTERED:	L. TURNIDGE, E. MARSHALL	3–2016

SRFB # RCO 087–1910C

PROJECT No. 1112049 (FL9001)

IAN R. MOSTRENKO, STATE OF WASHINGTON, 36069, REGISTERED PROFESSIONAL ENGINEER
03/23/16

HERRERA

King County
Department of Natural Resources and Parks
Water and Land Resources Division
River and Floodplain Management Section
Christie True, Director

COUNTYLINE LEVEE SETBACK

SITE PLAN FOR ENGINEERED LOG STRUCTURES

SHEET 27 OF 58 SHEETS

SB6

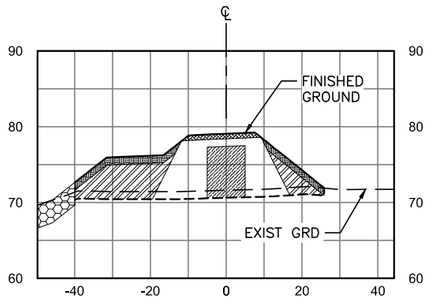

STA. 2+00 (A) SB1
1"=20' H, 1"=10' V

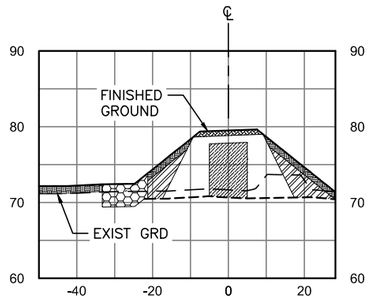

STA. 4+00 (B) SB1
1"=20' H, 1"=10' V

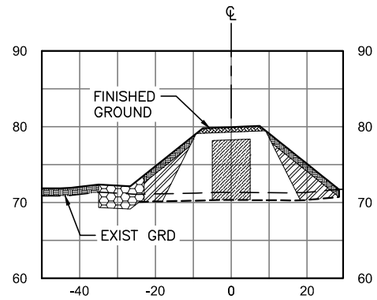

STA. 6+00 (C) SB1
1"=20' H, 1"=10' V

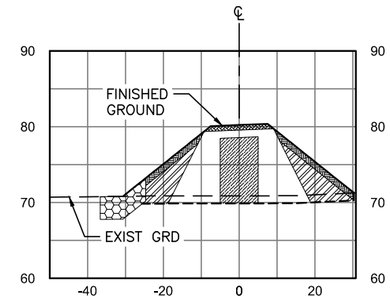

STA. 8+00 (D) SB1
1"=20' H, 1"=10' V

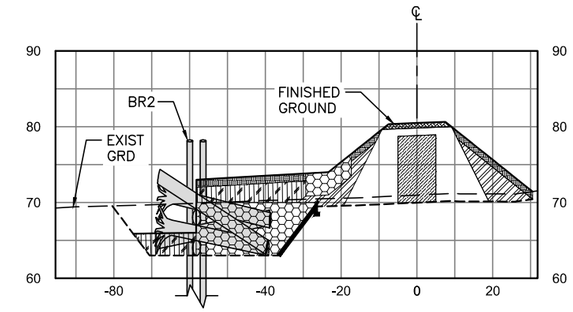

STA. 10+00 (E) SB1
1"=20' H, 1"=10' V

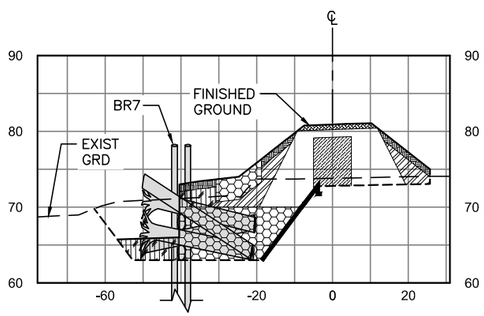

STA. 12+00 (F) SB1
1"=20' H, 1"=10' V

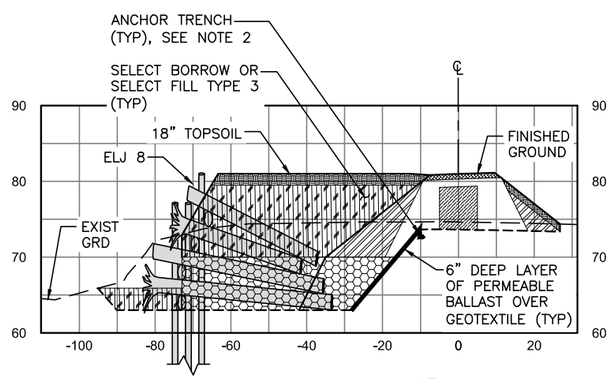

STA. 12+38 (G) SB2
1"=20' H, 1"=10' V

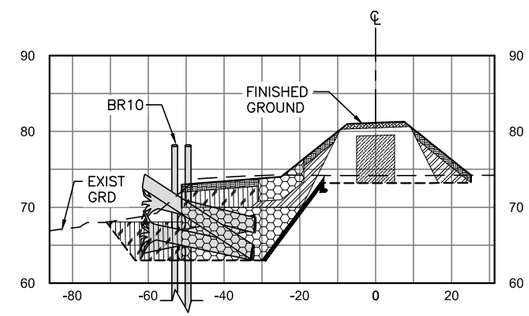

STA. 13+13 (H) SB2
1"=20' H, 1"=10' V

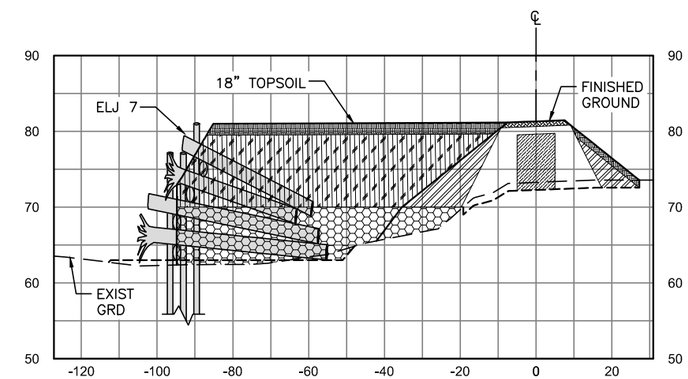

STA. 14+13 (I) SB2
1"=20' H, 1"=10' V

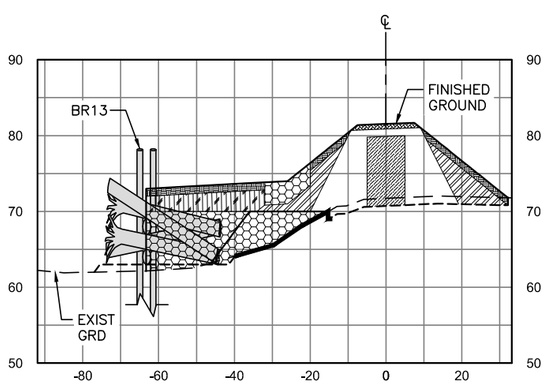

STA. 15+45 (J) SB2
1"=20' H, 1"=10' V

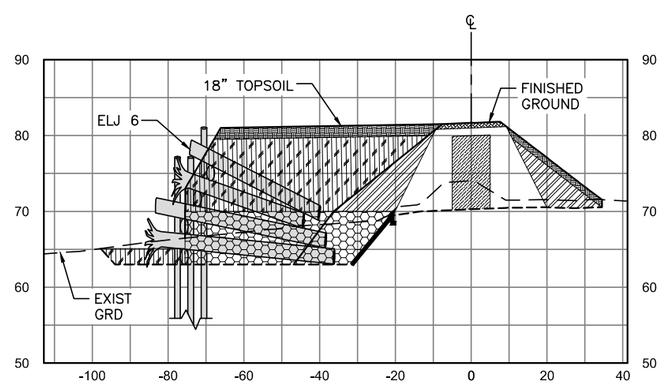

STA. 16+19 (K) SB2
1"=20' H, 1"=10' V

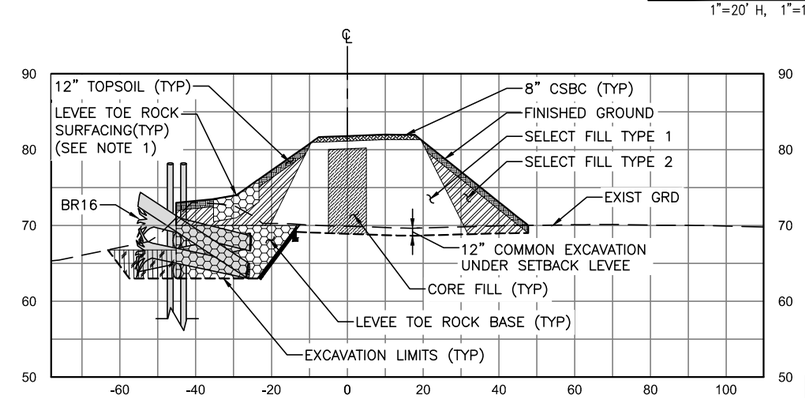

STA. 17+17 (L) SB2
1"=20' H, 1"=10' V

NOTES:

1. PLACE LEVEE TOE ROCK SURFACING 6' WATERWARD FROM LEVEE TOE, UP THE LEVEE SLOPE TO THE ELEVATION SHOWN ON DWGS SD1, TS1 & TS2, TO A DEPTH OF 3' BELOW FINISHED GRADE.
2. SECURE GEOTEXTILE IN 1' DEEP x 1' WIDE ANCHOR TRENCH. PLACE EXCAVATED SPOILS IN TRENCH OVER GEOTEXTILE.
3. DECOMPACT ALL AREAS RECEIVING TOPSOIL PLACEMENT IN ACCORDANCE WITH SECTION 31 23 00.

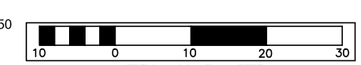

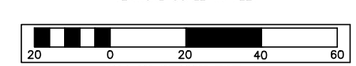

FIELD BOOK:
SURVEYED:
SURVEY BASE MAP:
CHECKED:

NUM.	REVISION	BY	DATE

APPROVED:	JEANNE STYPULA, PE	3-2016
PROJECT MANAGER:	CHRIS BRUMMER, PE	3-2016
DESIGNED:	CHRIS BRUMMER, PE	3-2016
ECOLOGIST:	STEPHANIE SHELTON	3-2016
DESIGN ENTERED:	HUE ONG	3-2016

SRFB # RCO 087-1910C

PROJECT No. 1112049 (FL9001)

CHRISTOPHER JON BRUMMER, STATE OF WASHINGTON, 40695, REGISTERED PROFESSIONAL ENGINEER
3/23/16

JAN B. MOSTRENKO, STATE OF WASHINGTON, 36069, REGISTERED PROFESSIONAL ENGINEER
03/23/16

King County
Department of Natural Resources and Parks
Water and Land Resources Division
River and Floodplain Management Section
Christie True, Director

COUNTYLINE LEVEE SETBACK

SETBACK LEVEE CROSS SECTIONS

SHEET 28 OF 58 SHEETS

SD1

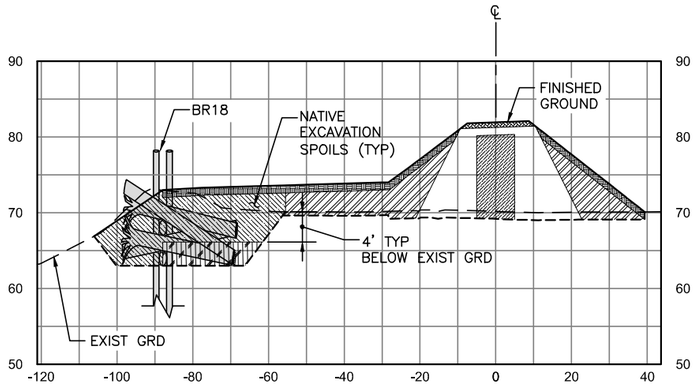

STA. 18+00 (M) SB2
1"=20' H, 1"=10' V

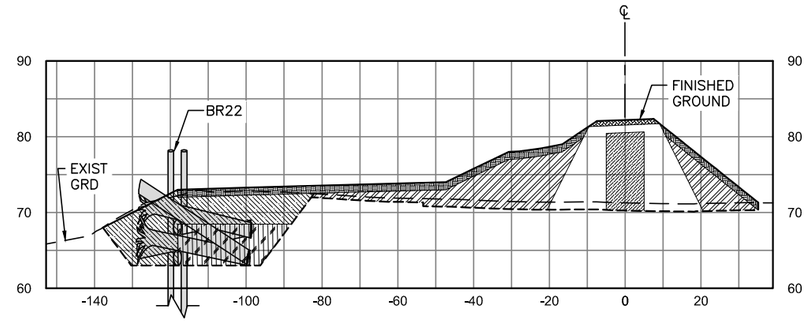

STA. 20+36 (N) SB2
1"=20' H, 1"=10' V

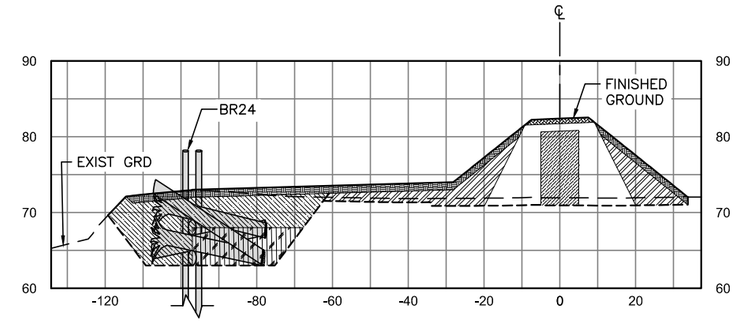

STA. 22+00 (O) SB2
1"=20' H, 1"=10' V

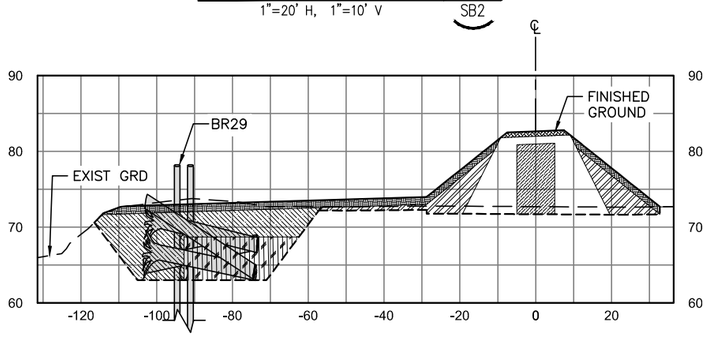

STA. 24+00 (P) SB3
1"=20' H, 1"=10' V

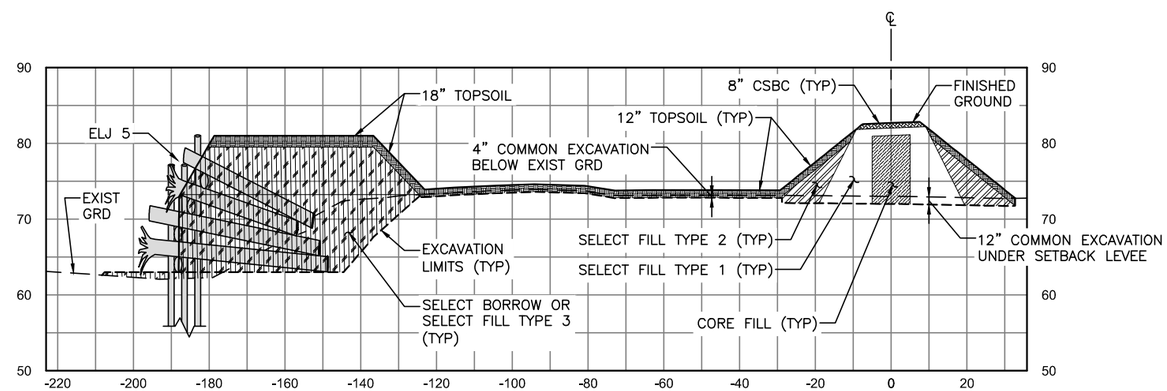

STA. 24+35 (Q) SB3
1"=20' H, 1"=10' V

NOTES:

1. DECOMPACT ALL AREAS RECEIVING TOPSOIL PLACEMENT IN ACCORDANCE WITH SECTION 31 23 00.

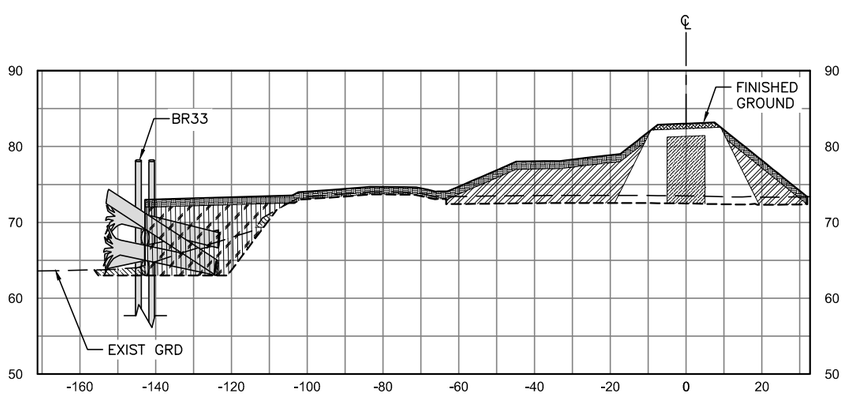

STA. 26+00 (R) SB3
1"=20' H, 1"=10' V

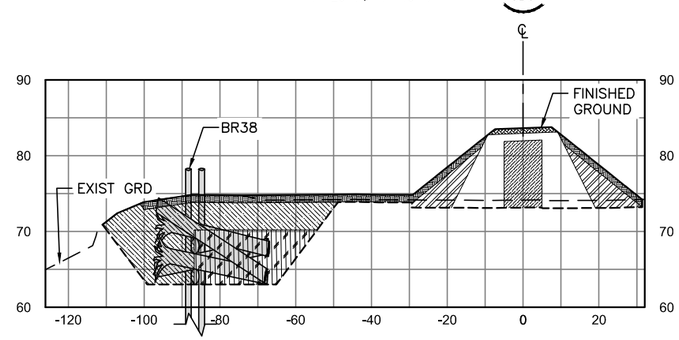

STA. 28+00 (S) SB3
1"=20' H, 1"=10' V

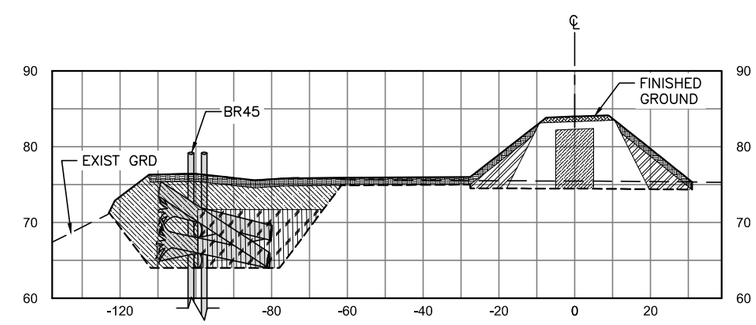

STA. 30+00 (T) SB3
1"=20' H, 1"=10' V

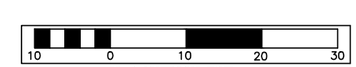

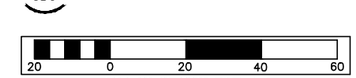

FIELD BOOK:
SURVEYED:
SURVEY BASE MAP:
CHECKED:

NUM.	REVISION	BY	DATE

APPROVED:	JEANNE STYPULA, PE	3-2016
PROJECT MANAGER:	CHRIS BRUMMER, PE	3-2016
DESIGNED:	CHRIS BRUMMER, PE	3-2016
ECOLOGIST:	STEPHANIE SHELTON	3-2016
DESIGN ENTERED:	HUE ONG	3-2016

SRFB # RCO 087-1910C

PROJECT No. 1112049 (FL9001)

CHRISTOPHER JON BRUMMER, STATE OF WASHINGTON, 40695, REGISTERED PROFESSIONAL ENGINEER, 3/23/16

JAN B. MOSTRENKO, STATE OF WASHINGTON, 36069, REGISTERED PROFESSIONAL ENGINEER, 03/23/16

King County
Department of Natural Resources and Parks
Water and Land Resources Division
River and Floodplain Management Section
Christie True, Director

COUNTYLINE LEVEE SETBACK

SETBACK LEVEE CROSS SECTIONS

SHEET 29 OF 58 SHEETS

SD2

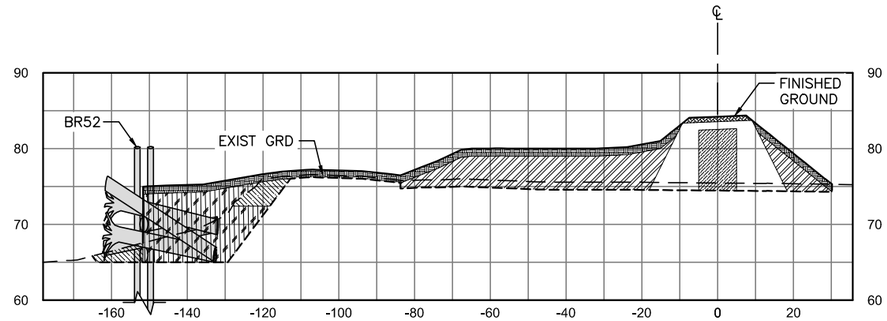

STA. 32+00 (U) SB3
1"=20' H, 1"=10' V

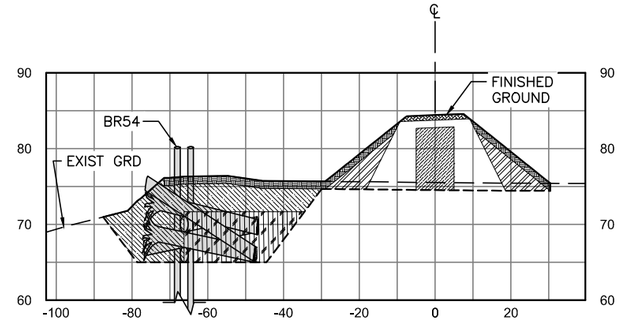

STA. 34+00 (V) SB3
1"=20' H, 1"=10' V

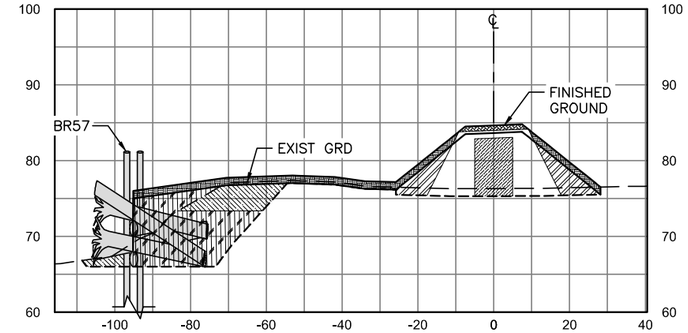

STA. 36+00 (W) SB4
1"=20' H, 1"=10' V

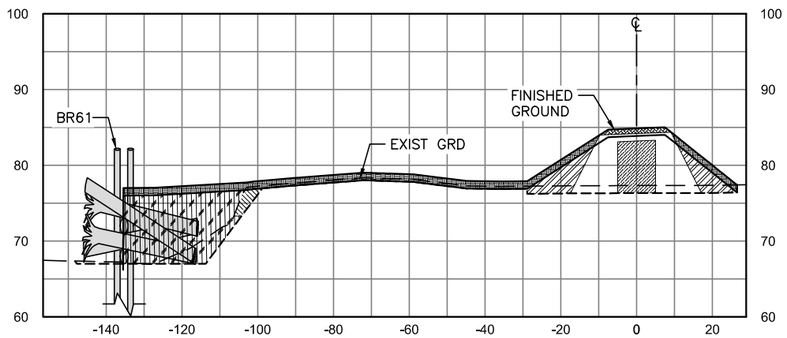

STA. 38+00 (X) SB4
1"=20' H, 1"=10' V

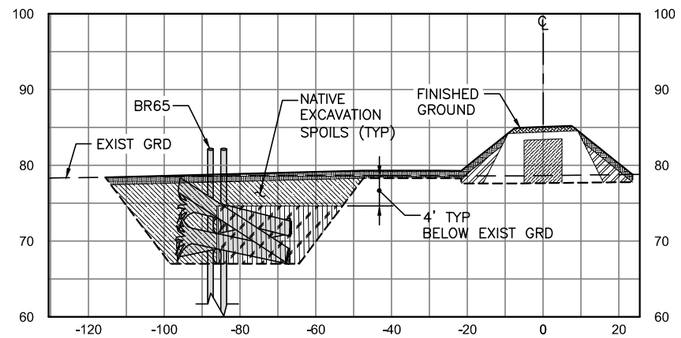

STA. 40+00 (Y) SB4
1"=20' H, 1"=10' V

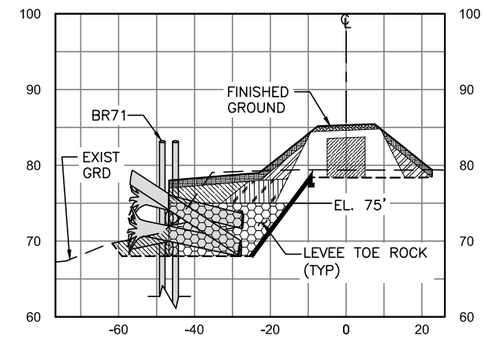

STA. 42+00 (Z) SB4
1"=20' H, 1"=10' V

NOTES:

1. SECURE GEOTEXTILE IN 1' DEEP x 1' WIDE ANCHOR TRENCH. PLACE EXCAVATED SPOILS IN TRENCH OVER GEOTEXTILE.
2. DECOMPACT ALL AREAS RECEIVING TOPSOIL PLACEMENT IN ACCORDANCE WITH SECTION 31 23 00.

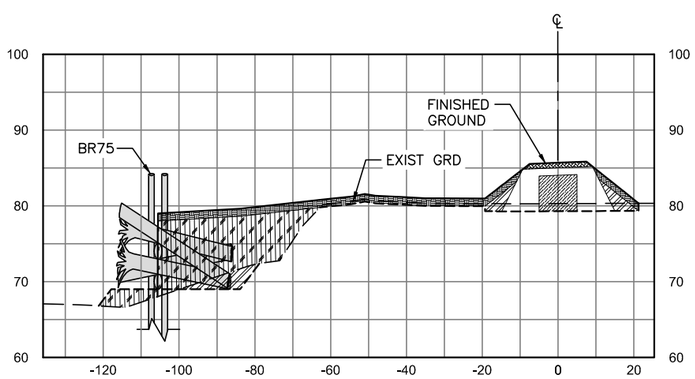

STA. 44+00 (AA) SB4
1"=20' H, 1"=10' V

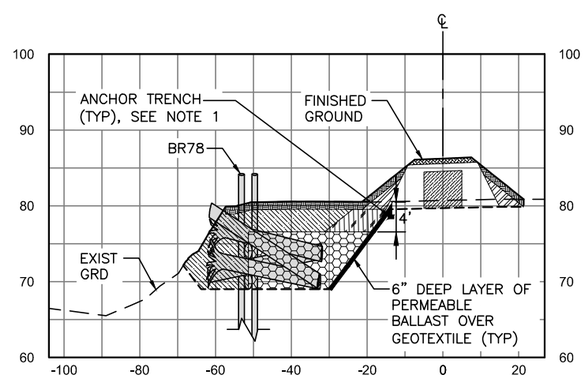

STA. 46+00 (AB) SB4
1"=20' H, 1"=10' V

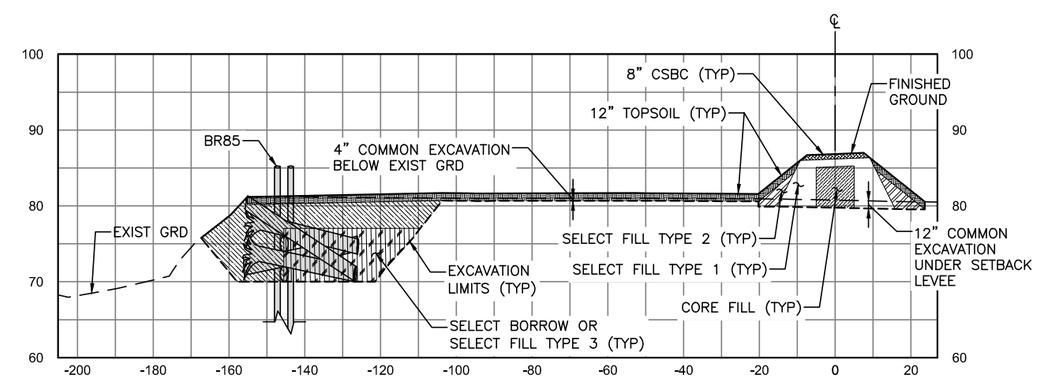

STA. 48+00 (AC) SB5
1"=20' H, 1"=10' V

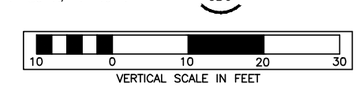

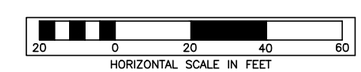

FIELD BOOK:
SURVEYED:
SURVEY BASE MAP:
CHECKED:

NUM.	REVISION	BY	DATE

APPROVED:	JEANNE STYPULA, PE	3-2016
PROJECT MANAGER:	CHRIS BRUMMER, PE	3-2016
DESIGNED:	CHRIS BRUMMER, PE	3-2016
ECOLOGIST:	STEPHANIE SHELTON	3-2016
DESIGN ENTERED:	HUE ONG	3-2016

SRFB # RCO 087-1910C

PROJECT No. 1112049 (FL9001)

CHRISTOPHER JON BRUMMER — STATE OF WASHINGTON — 40695 — REGISTERED PROFESSIONAL ENGINEER — 3/23/16

JAMES B. MOSTRANG — STATE OF WASHINGTON — 36069 — REGISTERED PROFESSIONAL ENGINEER — 03/23/16

King County
Department of Natural Resources and Parks
Water and Land Resources Division
River and Floodplain Management Section
Christie True, Director

COUNTYLINE LEVEE SETBACK

SETBACK LEVEE CROSS SECTIONS

SHEET 30 OF 58 SHEETS

SD3

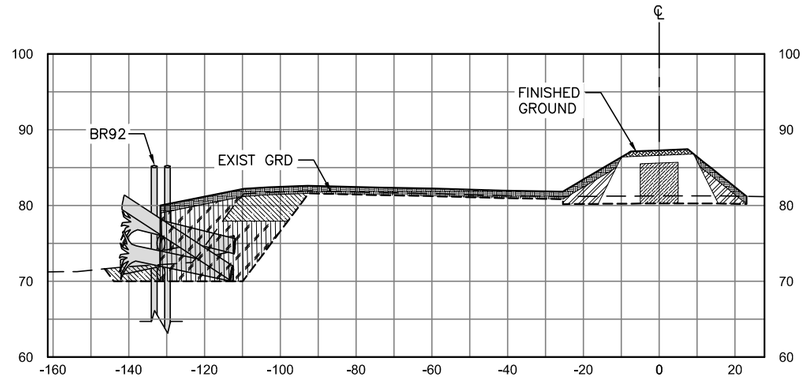

STA. 50+00 (AD) SB5
1"=20' H, 1"=10' V

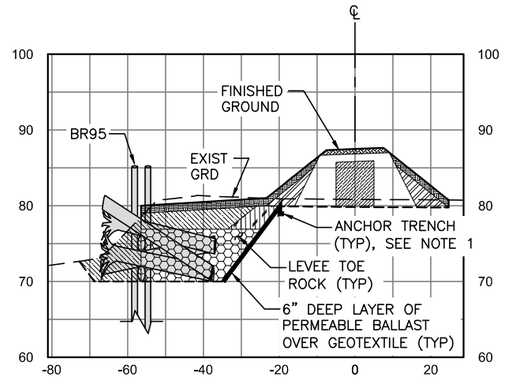

STA. 52+00 (AE) SB5
1"=20' H, 1"=10' V

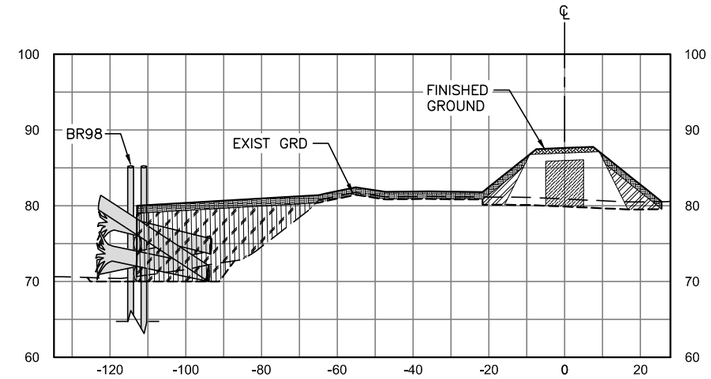

STA. 54+00 (AF) SB5
1"=20' H, 1"=10' V

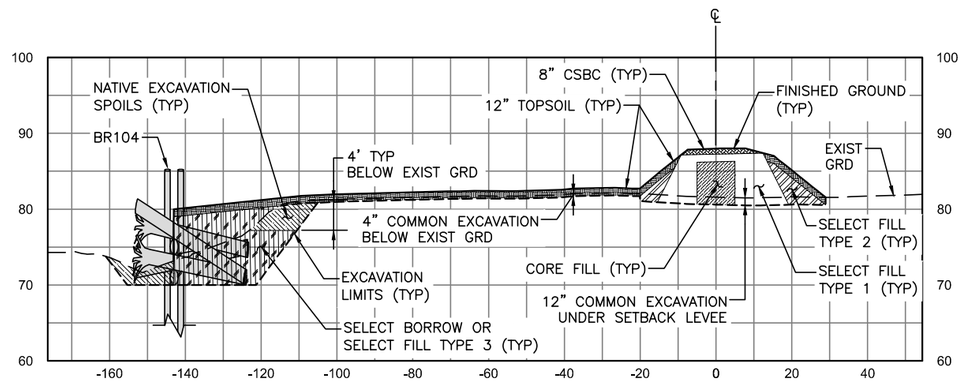

STA. 56+00 (AG) SB5
1"=20' H, 1"=10' V

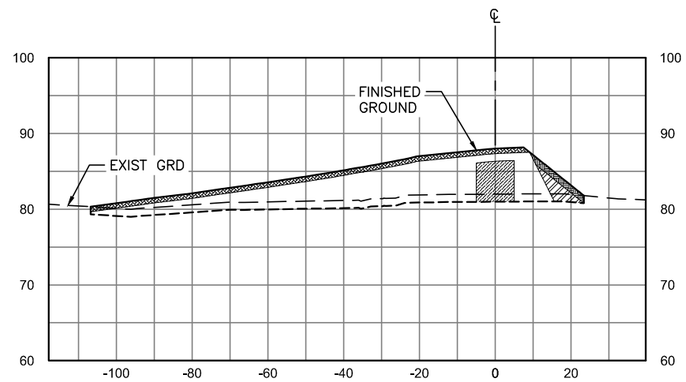

STA. 58+12 (AH) SB5
1"=20' H, 1"=10' V

NOTES:

1. SECURE GEOTEXTILE IN 1' DEEP x 1' WIDE ANCHOR TRENCH. PLACE EXCAVATED SPOILS IN TRENCH OVER GEOTEXTILE.
2. DECOMPACT ALL AREAS RECEIVING TOPSOIL PLACEMENT IN ACCORDANCE WITH SECTION 31 23 00.

VERTICAL SCALE IN FEET (10 0 10 20 30)

HORIZONTAL SCALE IN FEET (20 0 20 40 60)

FIELD BOOK:
SURVEYED:
SURVEY BASE MAP:
CHECKED:

NUM.	REVISION	BY	DATE

APPROVED:	JEANNE STYPULA, PE	3-2016
PROJECT MANAGER:	CHRIS BRUMMER, PE	3-2016
DESIGNED:	CHRIS BRUMMER, PE	3-2016
ECOLOGIST:	STEPHANIE SHELTON	3-2016
DESIGN ENTERED:	HUE ONG	3-2016

SRFB # RCO 087-1910C

PROJECT No. 1112049 (FL9001)

CHRISTOPHER JON BRUMMER, STATE OF WASHINGTON, 40695, REGISTERED PROFESSIONAL ENGINEER, 3/23/16

IAN B. MOSTRENKO, STATE OF WASHINGTON, 36069, REGISTERED PROFESSIONAL ENGINEER, 03/23/16

King County
Department of Natural Resources and Parks
Water and Land Resources Division
River and Floodplain Management Section
Christie True, Director

COUNTYLINE LEVEE SETBACK

SETBACK LEVEE CROSS SECTIONS

SHEET 31 OF 58 SHEETS

SD4

SETBACK LEVEE CONSTRUCTION QUANTITIES														
STATION	COMMON EXCAVATION		EMBANKMENT											
			CORE FILL		SELECT FILL				CSBC		LEVEE TOE ROCK			
					TYPE 1		TYPE 2				BASE		SURFACING	
	END AREA (SF)	VOL (CY)	END AREA (SF)	VOL (CY)	END AREA (SF)	VOL (CY)	END AREA (SF)	VOL (CY)	END AREA (SF)	VOL (CY)	END AREA (SF)	VOL (CY)	END AREA (SF)	VOL (CY)
0+00.00	0	0	0	0	0	0	0	0	0	0	0	0	0	0
2+00.00	76	550	70	347	250	1653	36	740	23	165	0	0	33	328
4+00.00	50	429	71	513	128	1300	55	413	11	114	0	0	33	215
6+00.00	68	395	83	565	169	1087	84	519	11	84	0	0	38	279
8+00.00	63	495	88	636	184	1311	95	660	11	84	0	0	50	323
10+00.00	57	473	90	678	188	1424	100	768	11	84	190	2386	29	382
12+00.00	59	457	66	621	141	1293	59	691	12	85	0	0	37	218
12+38.02	67	83	62	93	133	189	44	61	12	20	355	1050	0	50
13+12.79	56	160	65	179	125	345	49	131	11	34	189	840	35	42
14+13.11	65	233	77	263	169	516	102	255	11	44	437	1235	0	104
15+44.81	54	279	90	434	203	931	123	532	11	56	271	829	37	86
16+18.89	80	184	101	270	228	584	141	354	11	34	573	1261	0	85
17+17.41	74	286	112	351	378	985	164	545	15	48	279	819	41	61
18+00.00	81	239	113	350	276	1122	166	580	12	48	5	50	0	94
20+35.56	42	665	97	891	212	1970	123	1498	11	100	25	31	0	0
22+00.00	63	295	98	602	214	1300	124	1008	11	71	0	50	0	0
24+00.00	58	508	93	721	197	1551	108	1372	11	84	0	0	0	0
26+00.00	50	586	88	671	183	1406	96	915	11	84	0	0	0	0
28+00.00	61	515	89	659	187	1372	99	856	11	84	0	0	0	0
30+00.00	59	581	79	623	173	1313	78	886	12	87	0	0	0	0
32+00.00	57	561	82	595	166	1206	82	738	11	85	0	0	0	0
34+00.00	53	466	82	626	168	1283	84	1014	11	84	200	444	0	0
36+00.00	31	369	73	586	144	1181	63	564	11	84	0	0	0	0
38+00.00	47	383	69	536	135	1048	55	657	11	84	0	0	0	0
40+00.00	36	482	56	439	106	1097	35	347	11	100	0	0	0	0
42+00.00	61	436	57	399	108	784	36	259	11	84	189	1820	0	0
44+00.00	32	382	46	388	85	720	22	219	11	84	0	0	0	0
46+00.00	69	443	56	382	105	711	34	208	11	84	207	1224	0	0
48+00.00	42	499	55	397	102	739	33	231	11	84	0	0	0	0
50+00.00	54	474	56	437	106	776	36	256	11	84	0	0	0	0
52+00.00	44	465	60	435	114	819	42	285	11	81	186	1378	0	0
54+00.00	42	320	61	458	116	916	42	318	11	92	200	370	0	0
56+00.00	34	558	54	448	132	883	33	306	13	85	0	0	0	0
58+11.79	137	1418	55	442	391	1056	21	273	68	127	0	0	0	0
59+42.64	0	668	0	214	0	793	0	195	0	86	0	0	0	0
TOTALS		15336		16250		35664		18652		2741		13787		2267

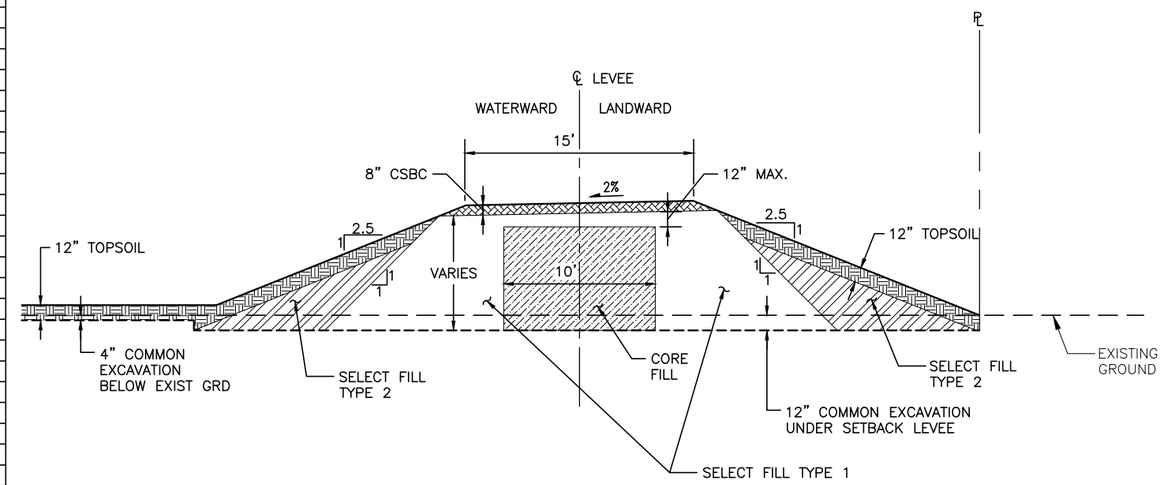

TYPICAL SETBACK LEVEE SECTION

SCALE: 1"=5'

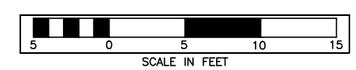

NOTES:

1. DECOMPACT ALL AREAS RECEIVING TOPSOIL PLACEMENT IN ACCORDANCE WITH SECTION 31 23 00.
2. SETBACK LEVEE CONSTRUCTION QUANTITIES TABLE DOES NOT INCLUDE SELECT BORROW/SELECT FILL TYPE 3 FOR ELJs OR THE BIOREVETMENT. SEE WD DWGS FOR QUANTITIES OF SELECT BORROW/SELECT FILL TYPE 3 FOR ELJs AND THE BIOREVETMENT.

FIELD BOOK:
SURVEYED:
SURVEY BASE MAP:
CHECKED:

NUM.	REVISION	BY	DATE

APPROVED:	JEANNE STYPULA, PE	3-2016
PROJECT MANAGER:	CHRIS BRUMMER, PE	3-2016
DESIGNED:	CHRIS BRUMMER, PE	3-2016
ECOLOGIST:	STEPHANIE SHELTON	3-2016
DESIGN ENTERED:	HUE ONG	3-2016

SRFB # RCO 087-1910C

PROJECT No. 1112049 (FL9001)

CHRISTOPHER JON BRUMMER, STATE OF WASHINGTON, 40695, REGISTERED PROFESSIONAL ENGINEER
3/23/16

King County
Department of Natural Resources and Parks
Water and Land Resources Division
River and Floodplain Management Section
Christie True, Director

COUNTYLINE LEVEE SETBACK

SETBACK LEVEE CROSS SECTIONS AND TYPICAL DETAILS

SHEET 32 OF 58 SHEETS

SD5

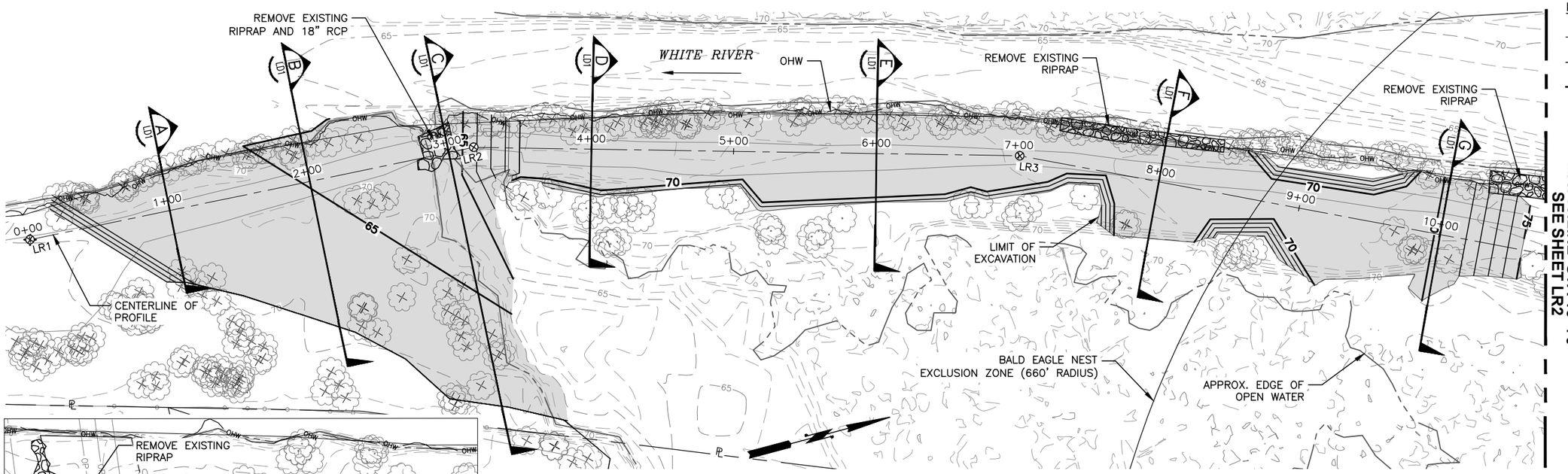

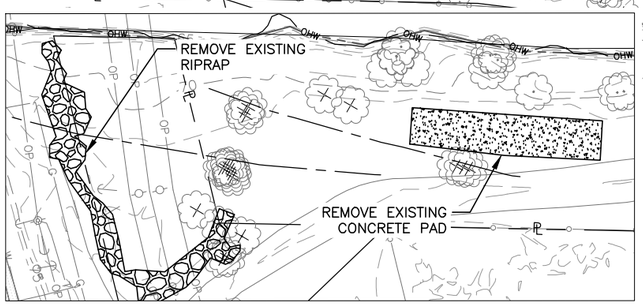

40 0 40 80 120
SCALE IN FEET

LEGEND:

- OHW — OHW
- FG (MINOR CONTOURS)
- 70 — FG (MAJOR CONTOURS)
- LEVEE AND REVETMENT EXCAVATION
- EXIST TREE TO BE PROTECTED
- EXIST TREE TO BE REMOVED

LEVEE COORDINATE GEOMETRY TABLE:

POINT ID	COORDINATE		DESCRIPTION
	NORTHING	EASTING	
⊗ LR1	95302.11	1290421.21	START STA 0+00
⊗ LR2	95619.39	1290439.24	PI STA 3+17.79
⊗ LR3	95987.78	1290544.05	PI STA 7+00.81

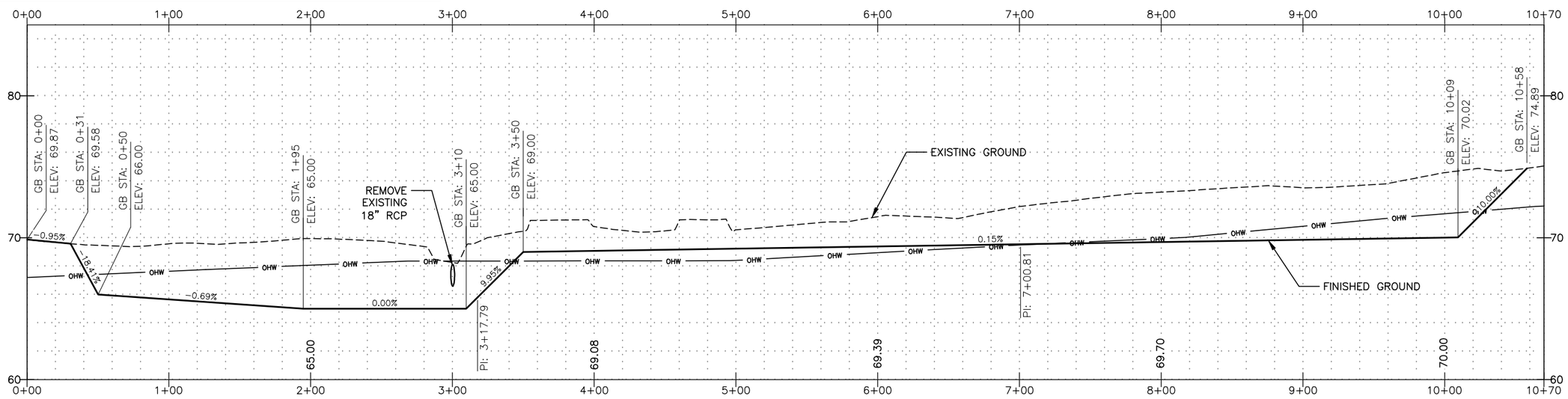

FIELD BOOK:			
SURVEYED:			
SURVEY BASE MAP:			
CHECKED:			

NUM.	REVISION	BY	DATE

APPROVED:	JEANNE STYPULA, PE	3-2016
PROJECT MANAGER:	CHRIS BRUMMER, PE	3-2016
DESIGNED:	CHRIS BRUMMER, PE	3-2016
ECOLOGIST:	STEPHANIE SHELTON	3-2016
DESIGN ENTERED:	L. TURNIDGE, E. MARSHALL	3-2016

SRFB # RCO 087-1910C

PROJECT No. 1112049 (FL9001)

CHRISTOPHER JON BRUMMER — STATE OF WASHINGTON — 40695 — REGISTERED PROFESSIONAL ENGINEER
3/23/16

King County
Department of Natural Resources and Parks
Water and Land Resources Division
River and Floodplain Management Section
Christie True, Director

COUNTYLINE LEVEE SETBACK

LEVEE EXCAVATION PLAN AND PROFILE

SHEET 33 OF 58 SHEETS

LR1

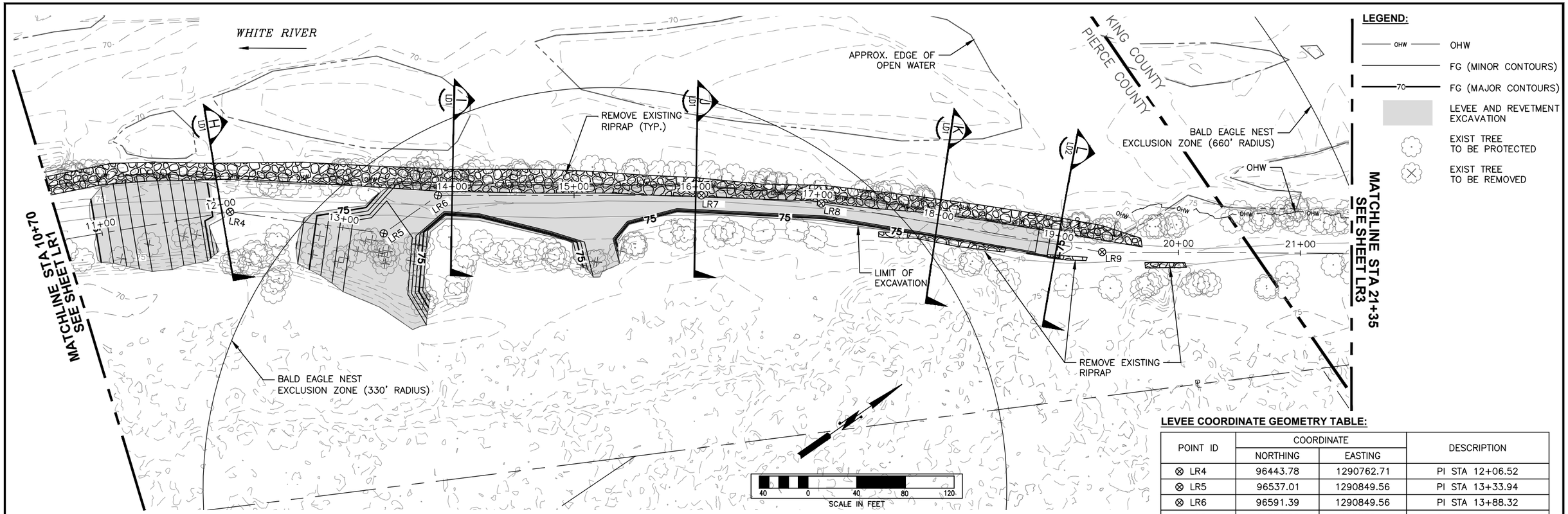

LEVEE COORDINATE GEOMETRY TABLE:

POINT ID	COORDINATE		DESCRIPTION
	NORTHING	EASTING	
⊗ LR4	96443.78	1290762.71	PI STA 12+06.52
⊗ LR5	96537.01	1290849.56	PI STA 13+33.94
⊗ LR6	96591.39	1290849.56	PI STA 13+88.32
⊗ LR7	96768.55	1290973.69	PI STA 16+04.64
⊗ LR8	96845.37	1291035.57	PI STA 17+03.28
⊗ LR9	97011.49	1291200.49	PI STA 19+37.35

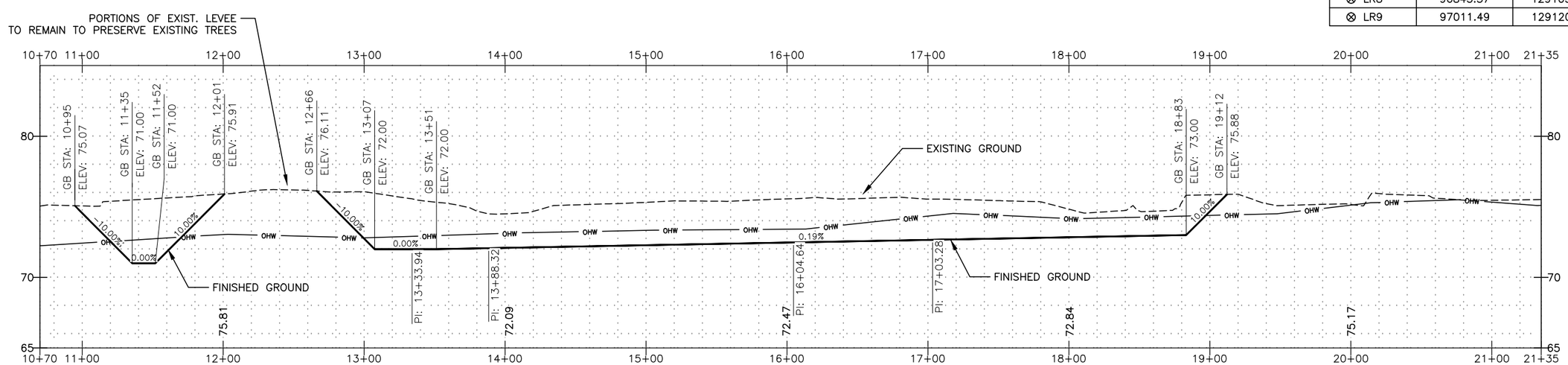

FIELD BOOK:	NUM.	REVISION	BY	DATE	APPROVED: JEANNE STYPULA, PE 3-2016
SURVEYED:					PROJECT MANAGER: CHRIS BRUMMER, PE 3-2016
SURVEY BASE MAP:					DESIGNED: CHRIS BRUMMER, PE 3-2016
CHECKED:					ECOLOGIST: STEPHANIE SHELTON 3-2016
					DESIGN ENTERED: L. TURNIDGE, E. MARSHALL 3-2016

SRFB # RCO 087-1910C

PROJECT No. 1112049 (FL9001)

CHRISTOPHER JON BRUMMER, STATE OF WASHINGTON, 40695, REGISTERED PROFESSIONAL ENGINEER, 3/23/16

King County
Department of Natural Resources and Parks
Water and Land Resources Division
River and Floodplain Management Section
Christie True, Director

COUNTYLINE LEVEE SETBACK

LEVEE EXCAVATION PLAN AND PROFILE

SHEET 34 OF 58 SHEETS

LR2

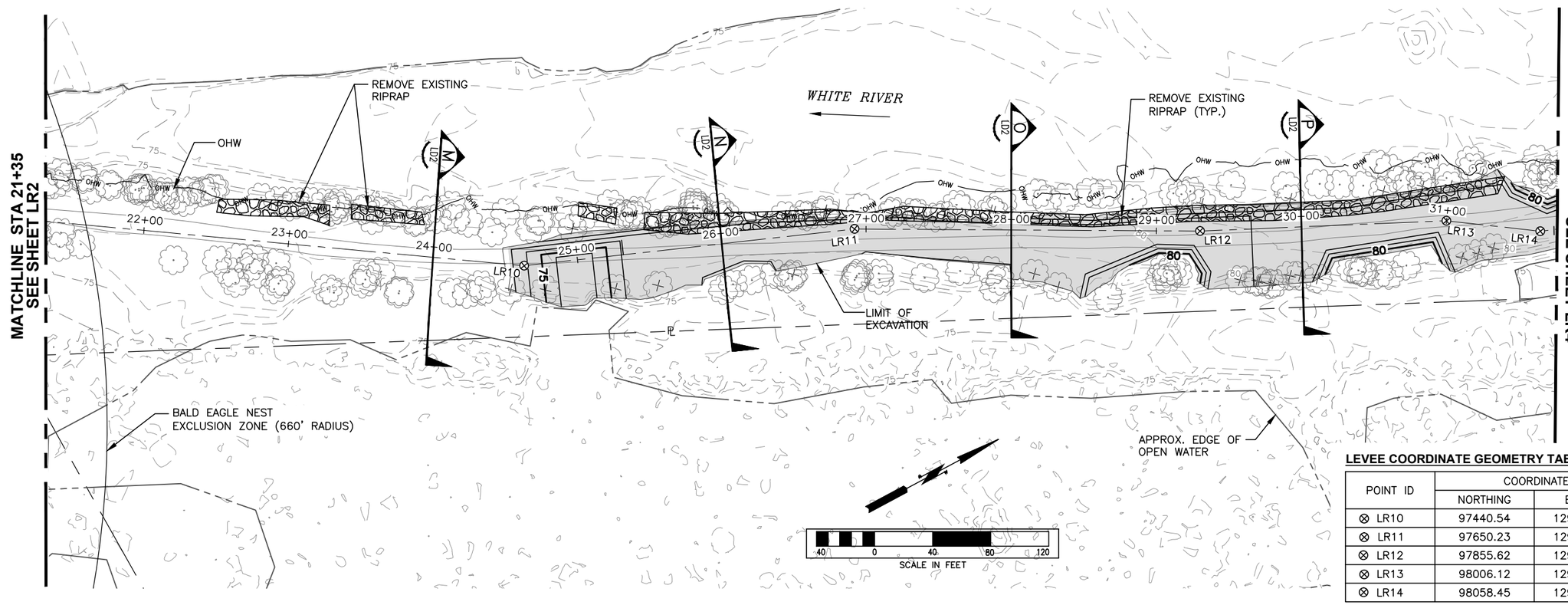

LEGEND:

- OHW — OHW
- FG (MINOR CONTOURS)
- 70 — FG (MAJOR CONTOURS)
- LEVEE AND REVETMENT EXCAVATION
- EXIST TREE TO BE PROTECTED
- EXIST TREE TO BE REMOVED

LEVEE COORDINATE GEOMETRY TABLE:

POINT ID	COORDINATE		DESCRIPTION
	NORTHING	EASTING	
⊗ LR10	97440.54	1291504.36	PI STA 24+63.12
⊗ LR11	97650.23	1291596.19	PI STA 26+92.04
⊗ LR12	97855.62	1291716.43	PI STA 29+30.03
⊗ LR13	98006.12	1291795.10	PI STA 30+99.85
⊗ LR14	98058.45	1291833.60	PI STA 31+64.82

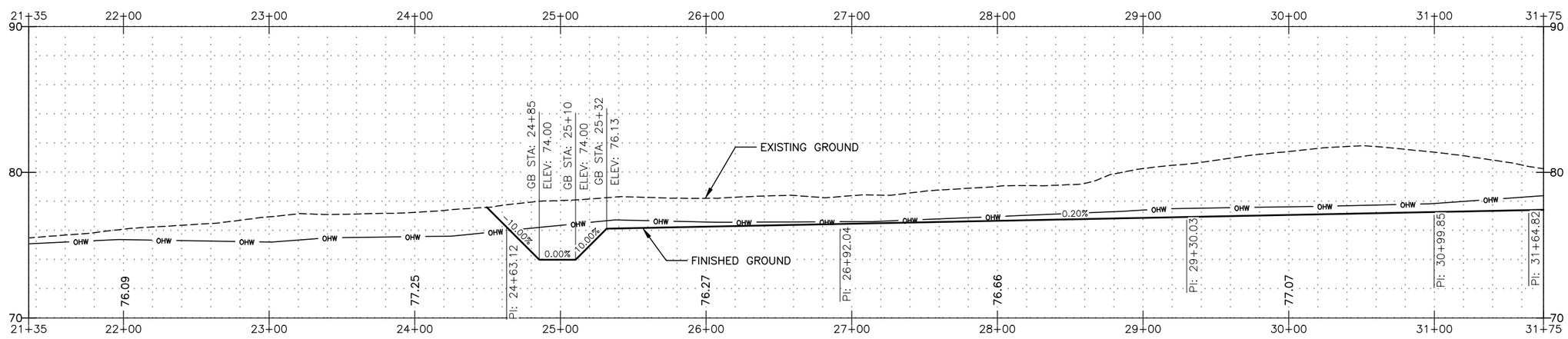

NUM.	REVISION	BY	DATE

FIELD BOOK:
SURVEYED:
SURVEY BASE MAP:
CHECKED:

APPROVED:	JEANNE STYPULA, PE	3-2016
PROJECT MANAGER:	CHRIS BRUMMER, PE	3-2016
DESIGNED:	CHRIS BRUMMER, PE	3-2016
ECOLOGIST:	STEPHANIE SHELTON	3-2016
DESIGN ENTERED:	L. TURNIDGE, E. MARSHALL	3-2016

SRFB # RCO 087-1910C

PROJECT No. 1112049 (FL9001)

CHRISTOPHER JON BRUMMER
STATE OF WASHINGTON
40695
REGISTERED PROFESSIONAL ENGINEER
3/23/16

King County
Department of Natural Resources and Parks
Water and Land Resources Division
River and Floodplain Management Section
Christie True, Director

COUNTYLINE LEVEE SETBACK

LEVEE EXCAVATION PLAN AND PROFILE

SHEET 35 OF 58 SHEETS

LR3

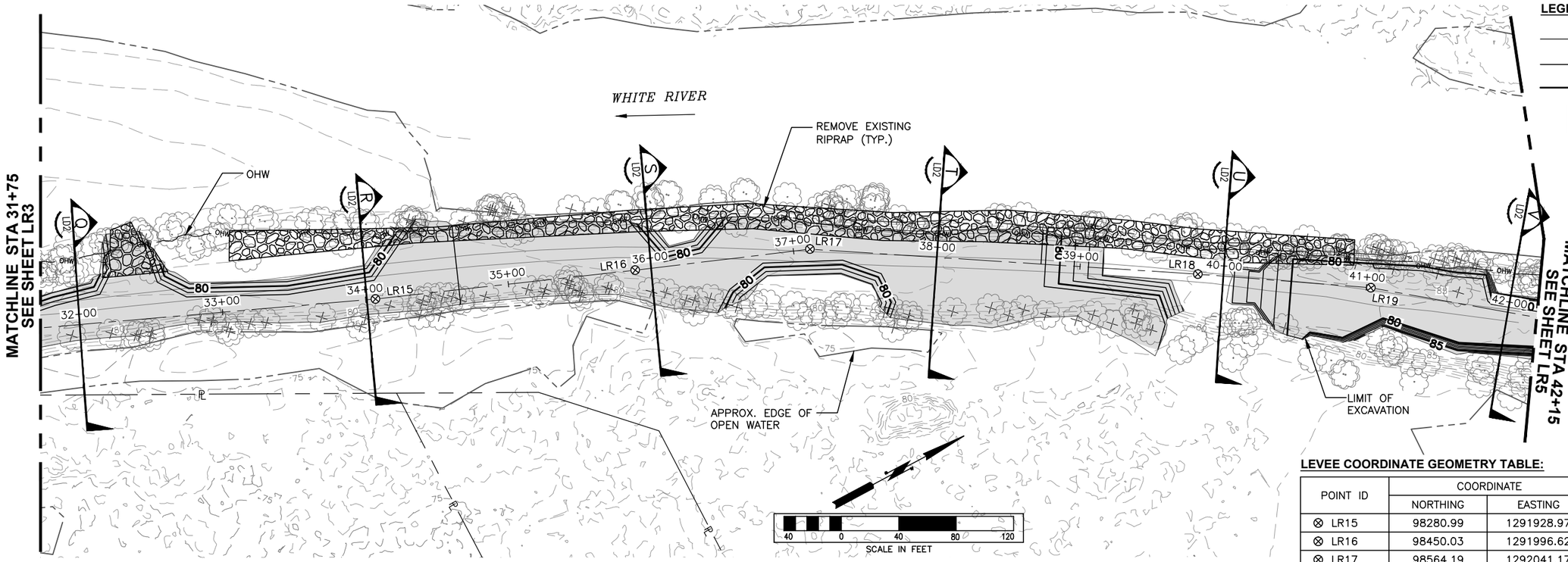

LEGEND:

- OHW — OHW
- FG (MINOR CONTOURS)
- 70 — FG (MAJOR CONTOURS)
- LEVEE AND REVETMENT EXCAVATION
- EXIST TREE TO BE PROTECTED
- EXIST TREE TO BE REMOVED

LEVEE COORDINATE GEOMETRY TABLE:

POINT ID	COORDINATE		DESCRIPTION
	NORTHING	EASTING	
⊗ LR15	98280.99	1291928.97	PI STA 34+06.93
⊗ LR16	98450.03	1291996.62	PI STA 35+89.01
⊗ LR17	98564.19	1292041.17	PI STA 37+11.55
⊗ LR18	98794.26	1292183.97	PI STA 39+82.33
⊗ LR19	98896.08	1292249.18	PI STA 41+03.25

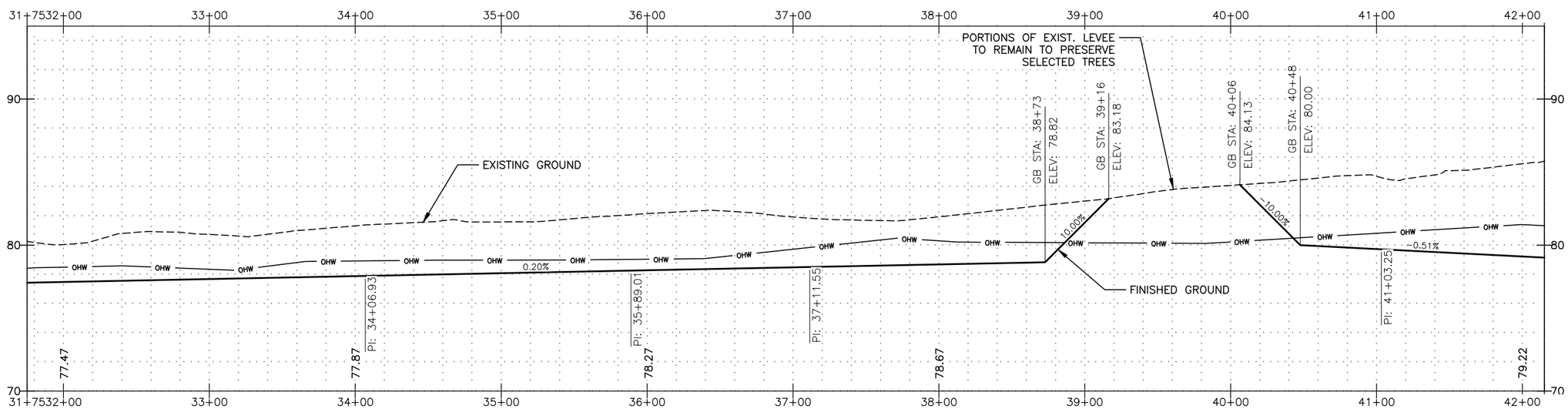

FIELD BOOK:			
SURVEYED:			
SURVEY BASE MAP:			
CHECKED:			

NUM.	REVISION	BY	DATE

APPROVED:	JEANNE STYPULA, PE	3-2016
PROJECT MANAGER:	CHRIS BRUMMER, PE	3-2016
DESIGNED:	CHRIS BRUMMER, PE	3-2016
ECOLOGIST:	STEPHANIE SHELTON	3-2016
DESIGN ENTERED:	L. TURNIDGE, E. MARSHALL	3-2016

SRFB # RCO 087-1910C

PROJECT No. 1112049 (FL9001)

CHRISTOPHER JON BRUMMER
STATE OF WASHINGTON
40695
REGISTERED
PROFESSIONAL ENGINEER
3/23/16

King County
Department of Natural Resources and Parks
Water and Land Resources Division
River and Floodplain Management Section
Christie True, Director

COUNTYLINE LEVEE SETBACK

LEVEE EXCAVATION PLAN AND PROFILE

SHEET 36 OF 58 SHEETS

LR4

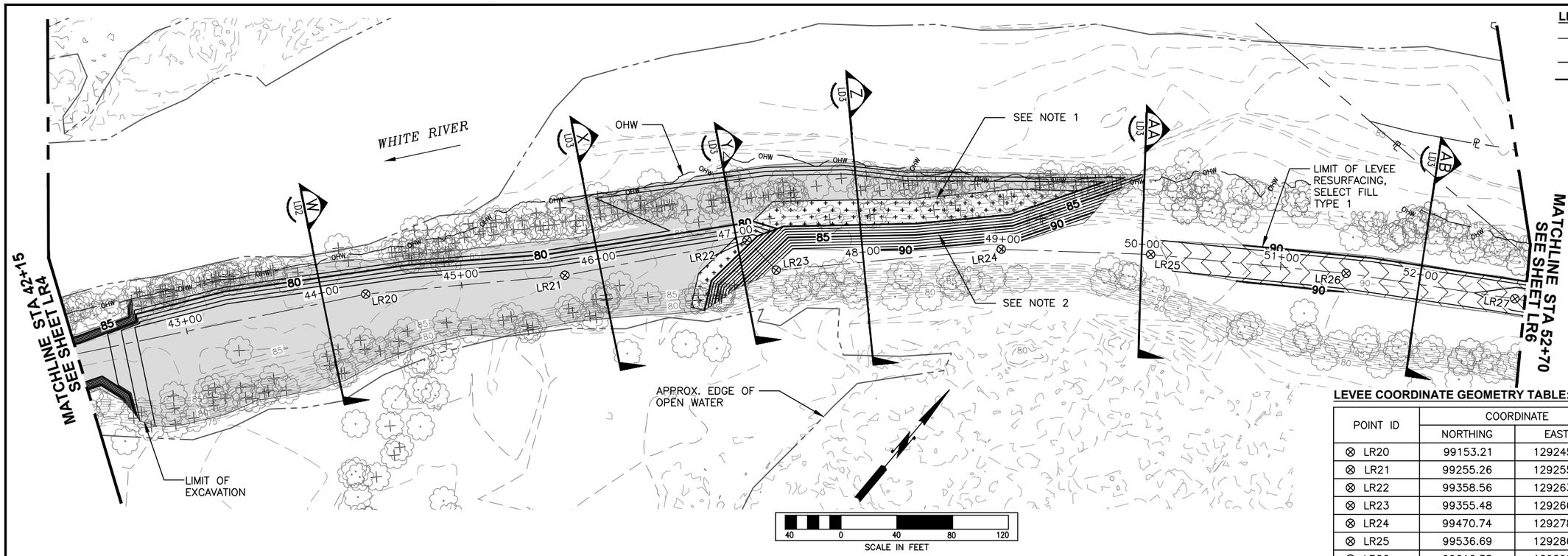

LEGEND:

- OHW — OHW
- FG (MINOR CONTOURS)
- 70 — FG (MAJOR CONTOURS)
- LEVEE AND REVETMENT EXCAVATION
- HEAVY LOOSE RIPRAP
- EXIST LEVEE RESURFACING
- EXIST TREE TO BE PROTECTED
- EXIST TREE TO BE REMOVED

NOTES:

1. PLACE HEAVY LOOSE RIPRAP FROM ELEV 70' TO 81'.
2. PLACE COIR LIFTS FROM ELEV 81' TO TOP OF EXIST LEVEE.

LEVEE COORDINATE GEOMETRY TABLE:

POINT ID	COORDINATE		DESCRIPTION
	NORTHING	EASTING	
⊗ LR20	99153.21	1292452.29	PI STA 44+30.92
⊗ LR21	99255.26	1292553.06	PI STA 45+74.34
⊗ LR22	99358.56	1292637.08	PI STA 47+07.49
⊗ LR23	99355.48	1292666.66	PI STA 47+37.23
⊗ LR24	99470.74	1292780.70	PI STA 48+99.38
⊗ LR25	99536.69	1292865.10	PI STA 50+06.49
⊗ LR26	99616.38	1292981.12	PI STA 51+47.25
⊗ LR27	99680.12	1293085.52	PI STA 52+69.57

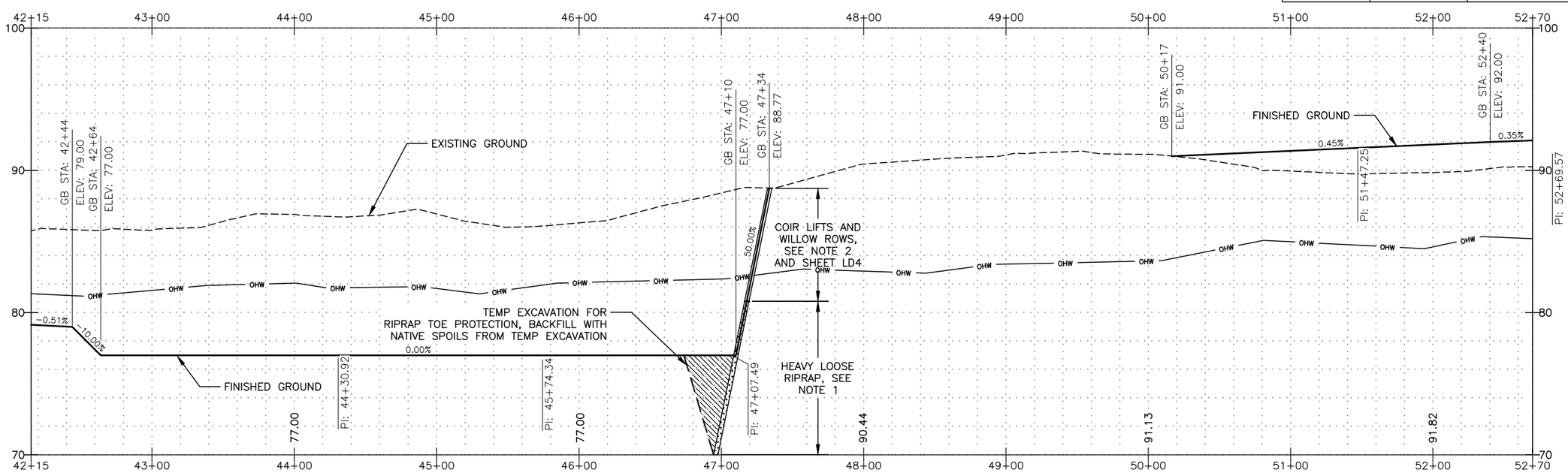

FIELD BOOK:	
SURVEYED:	
SURVEY BASE MAP:	
CHECKED:	

NUM.	REVISION	BY	DATE

APPROVED:	JEANNE STYPULA, PE	3-2016
PROJECT MANAGER:	CHRIS BRUMMER, PE	3-2016
DESIGNED:	CHRIS BRUMMER, PE	3-2016
ECOLOGIST:	STEPHANIE SHELTON	3-2016
DESIGN ENTERED:	L. TURNIDGE, E. MARSHALL	3-2016

SRFB # RCO 087-1910C

PROJECT No. 1112049 (FL9001)

CHRISTOPHER JON BRUMMER, STATE OF WASHINGTON, 40695, REGISTERED PROFESSIONAL ENGINEER

3/23/16

King County
Department of Natural Resources and Parks
Water and Land Resources Division
River and Floodplain Management Section
Christie True, Director

COUNTYLINE LEVEE SETBACK

LEVEE EXCAVATION PLAN AND PROFILE

SHEET 37 OF 58 SHEETS

LR5

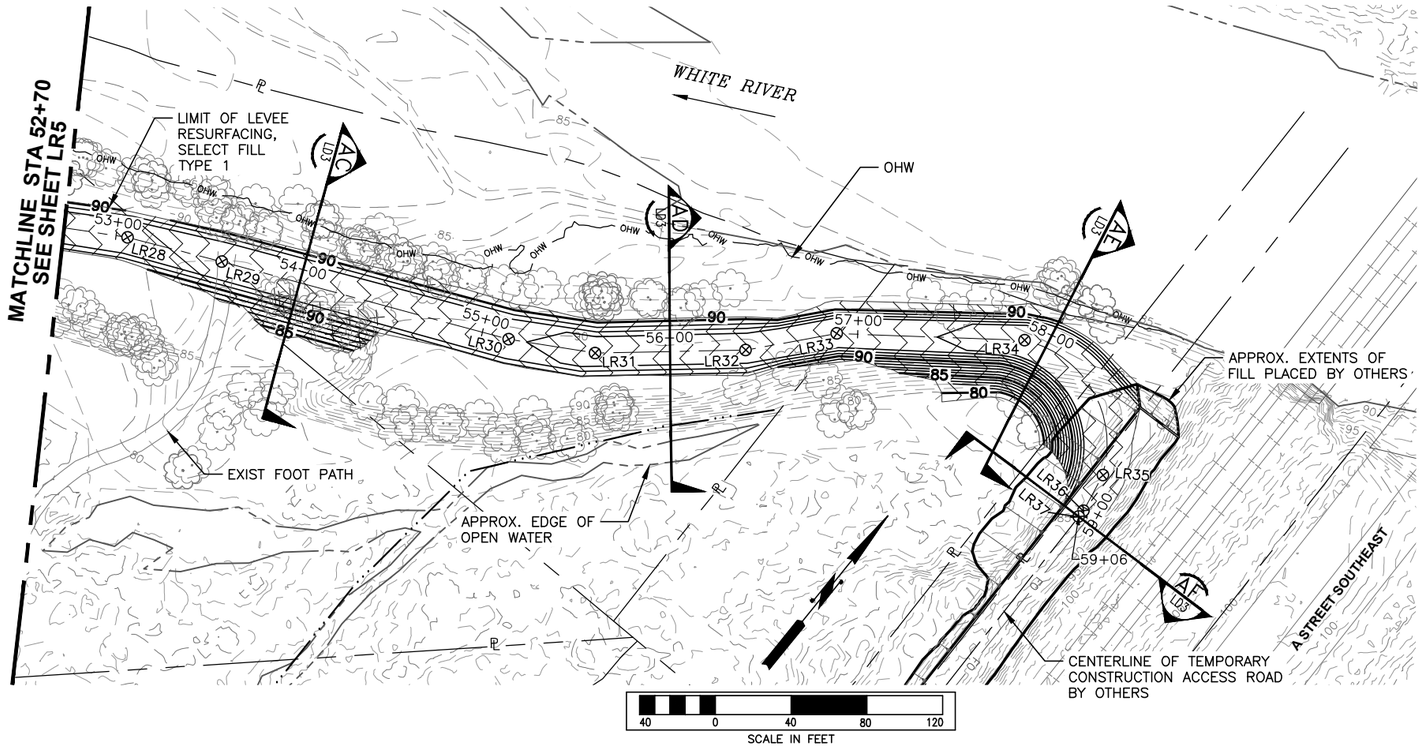

LEGEND:

- OHW — OHW
- FG (MINOR CONTOURS)
- 70 — FG (MAJOR CONTOURS)
- EXIST LEVEE RESURFACING
- EXIST TREE TO BE PROTECTED
- EXIST TREE TO BE REMOVED

NOTE:

BURIED FIBER OPTIC LINE TO BE RELOCATED BY OTHERS.

LEVEE COORDINATE GEOMETRY TABLE:

POINT ID	COORDINATE		DESCRIPTION
	NORTHING	EASTING	
⊗ LR28	99698.78	1293116.98	PI STA 53+06.15
⊗ LR29	99720.49	1293163.64	PI STA 53+57.61
⊗ LR30	99784.73	1293306.66	PI STA 55+14.39
⊗ LR31	99808.09	1293346.55	PI STA 55+60.62
⊗ LR32	99859.73	1293406.99	PI STA 56+40.11
⊗ LR33	99896.89	1293438.58	PI STA 56+88.89
⊗ LR34	99957.05	1293517.50	PC STA 57+88.13 R=56.41'
⊗ LR35	99927.88	1293594.43	PT STA 58+80.51
⊗ LR36	99907.15	1293598.60	PI STA 59+01.64
⊗ LR37	99903.12	1293598.68	END STA 59+05.67

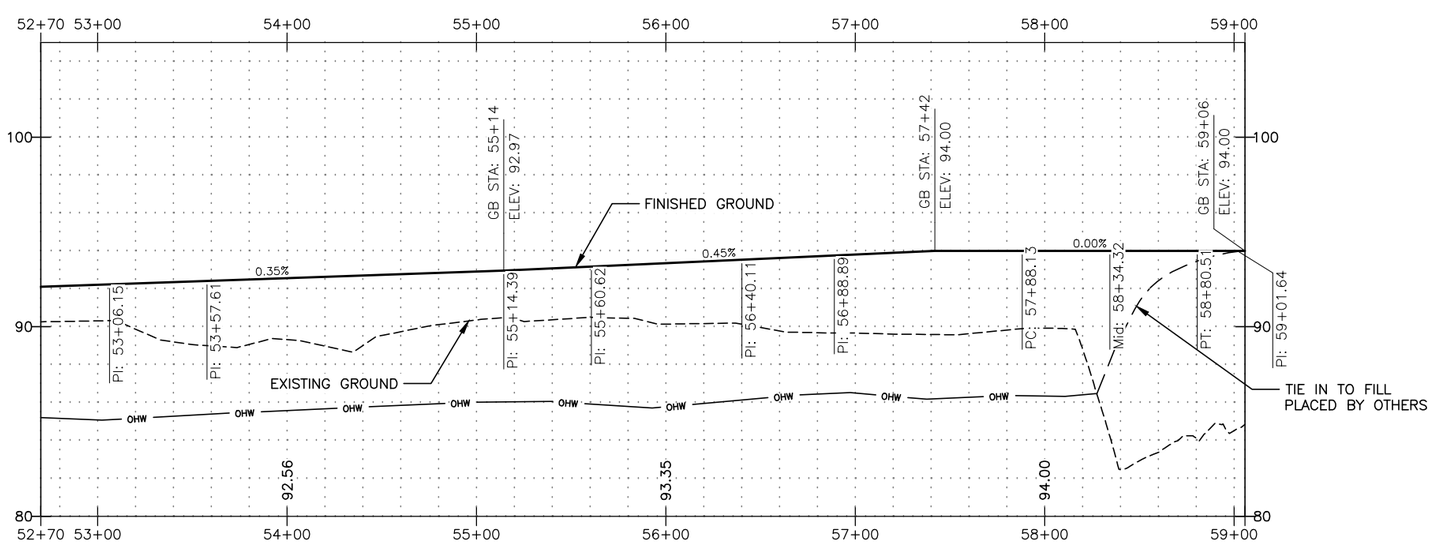

FIELD BOOK:	NUM.	REVISION	BY	DATE	APPROVED: JEANNE STYPULA, PE 3-2016
SURVEYED:					PROJECT MANAGER: CHRIS BRUMMER, PE 3-2016
SURVEY BASE MAP:					DESIGNED: CHRIS BRUMMER, PE 3-2016
CHECKED:					ECOLOGIST: STEPHANIE SHELTON 3-2016
					DESIGN ENTERED: L. TURNIDGE, E. MARSHALL 3-2016

SRFB # RCO 087-1910C

PROJECT No. 1112049 (FL9001)

CHRISTOPHER JON PLUMMER, STATE OF WASHINGTON, 40695, REGISTERED PROFESSIONAL ENGINEER
3/23/16

King County
Department of Natural Resources and Parks
Water and Land Resources Division
River and Floodplain Management Section
Christie True, Director

COUNTYLINE LEVEE SETBACK

LEVEE EXCAVATION PLAN AND PROFILE

SHEET 38 OF 58 SHEETS

LR6

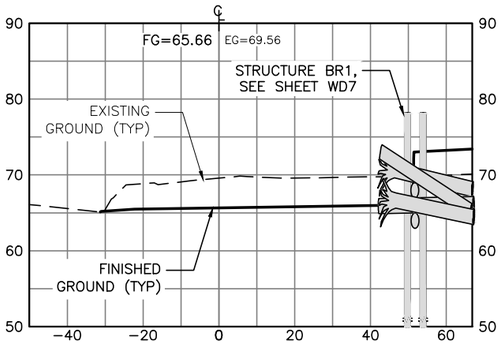

STA. 1+00 (A, LR1)
1" = 20' H, 1" = 10' V

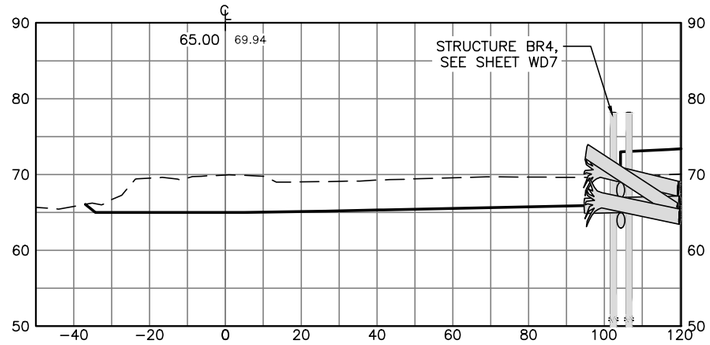

STA. 2+00 (B, LR1)
1" = 20' H, 1" = 10' V

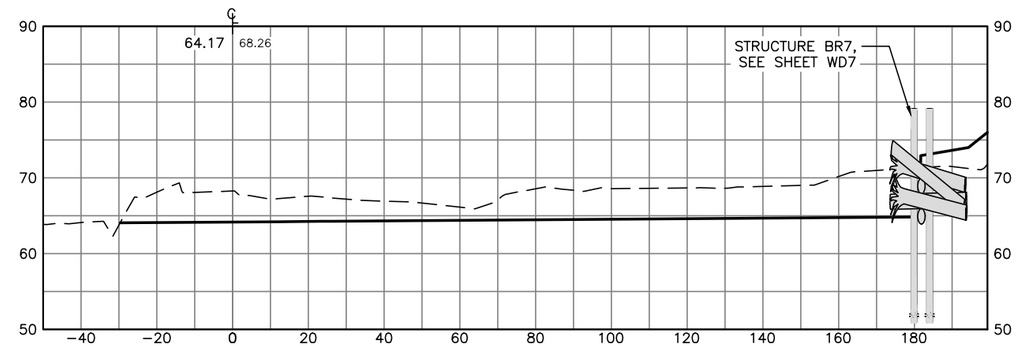

STA. 3+00 (C, LR1)
1" = 20' H, 1" = 10' V

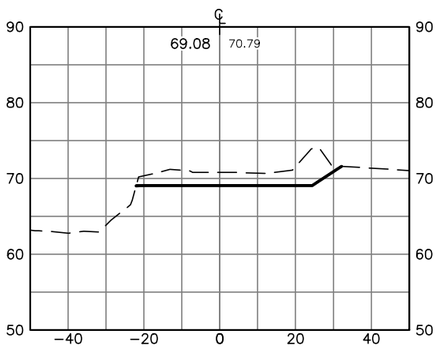

STA. 4+00 (D, LR1)
1" = 20' H, 1" = 10' V

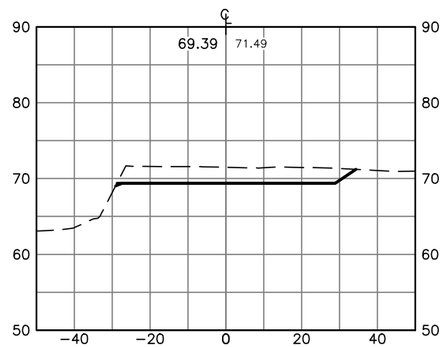

STA. 6+00 (E, LR1)
1" = 20' H, 1" = 10' V

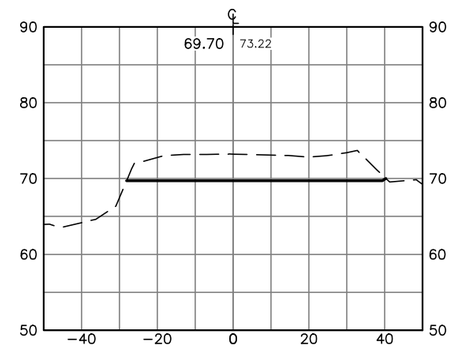

STA. 8+00 (F, LR1)
1" = 20' H, 1" = 10' V

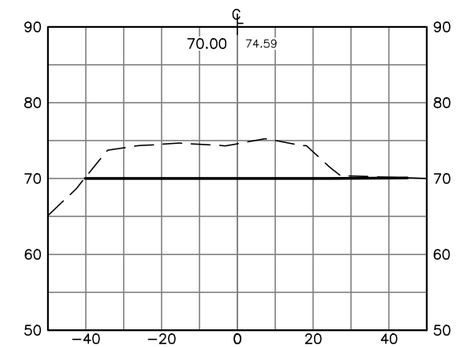

STA. 10+00 (G, LR1)
1" = 20' H, 1" = 10' V

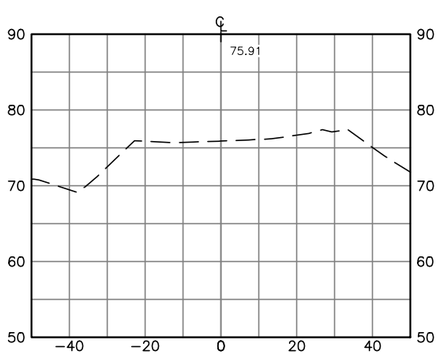

STA. 12+00 (H, LR2)
1" = 20' H, 1" = 10' V

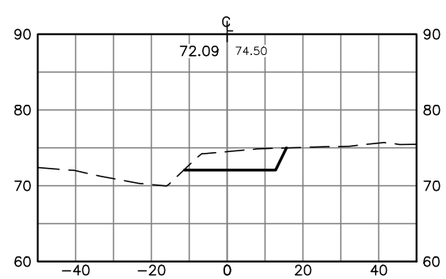

STA. 14+00 (I, LR2)
1" = 20' H, 1" = 10' V

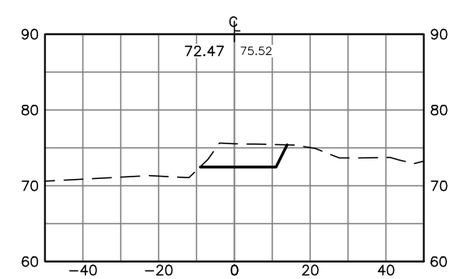

STA. 16+00 (J, LR2)
1" = 20' H, 1" = 10' V

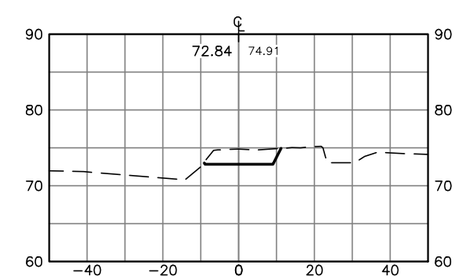

STA. 18+00 (K, LR2)
1" = 20' H, 1" = 10' V

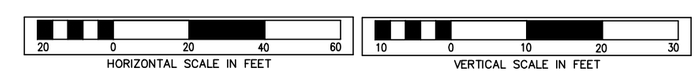

FIELD BOOK:
SURVEYED:
SURVEY BASE MAP:
CHECKED:

NUM.	REVISION	BY	DATE

APPROVED:	JEANNE STYPULA, PE	3-2016
PROJECT MANAGER:	CHRIS BRUMMER, PE	3-2016
DESIGNED:	CHRIS BRUMMER, PE	3-2016
ECOLOGIST:	STEPHANIE SHELTON	3-2016
DESIGN ENTERED:	L. TURNIDGE, E. MARSHALL	3-2016

SRFB # RCO 087-1910C

PROJECT No. 1112049 (FL9001)

CHRISTOPHER JON BRUMMER, STATE OF WASHINGTON, 43695, REGISTERED PROFESSIONAL ENGINEER
3/23/16

King County
Department of Natural Resources and Parks
Water and Land Resources Division
River and Floodplain Management Section
Christie True, Director

COUNTYLINE LEVEE SETBACK

LEVEE EXCAVATION CROSS SECTIONS

SHEET 39 OF 58 SHEETS

LD1

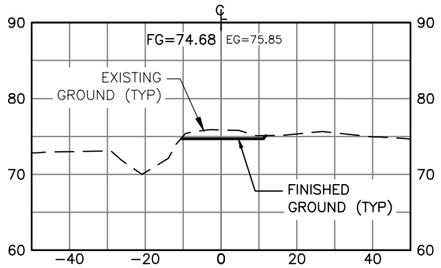

STA. 19+00 (L) LR2
1" = 20' H, 1" = 10' V

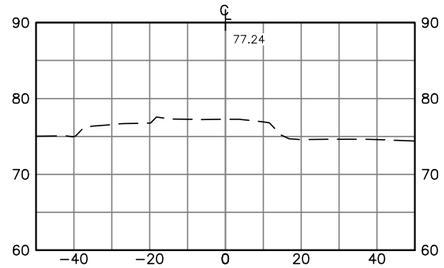

STA. 24+00 (M) LR3
1" = 20' H, 1" = 10' V

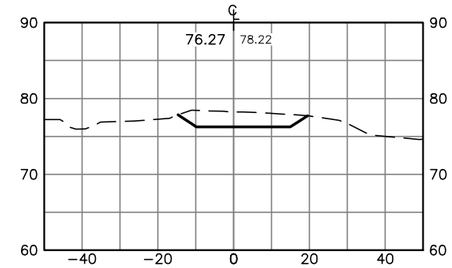

STA. 26+00 (N) LR3
1" = 20' H, 1" = 10' V

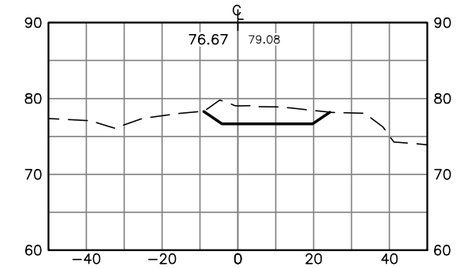

STA. 28+00 (O) LR3
1" = 20' H, 1" = 10' V

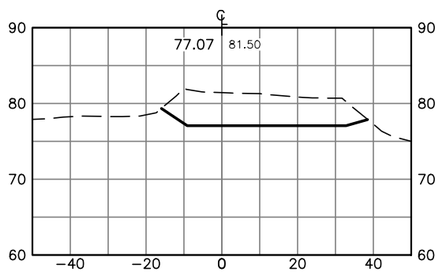

STA. 30+00 (P) LR3
1" = 20' H, 1" = 10' V

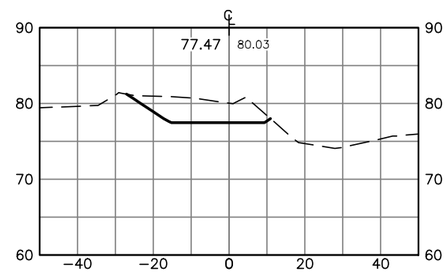

STA. 32+00 (Q) LR4
1" = 20' H, 1" = 10' V

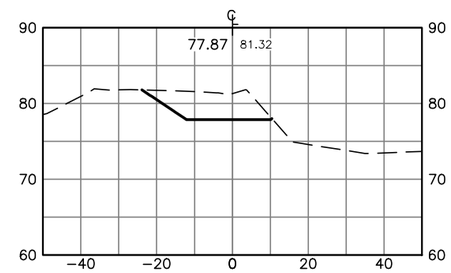

STA. 34+00 (R) LR4
1" = 20' H, 1" = 10' V

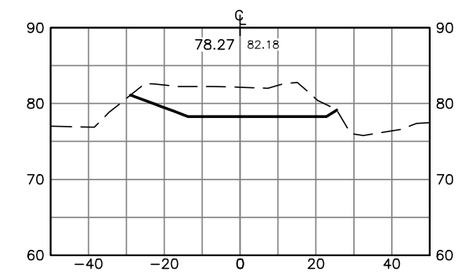

STA. 36+00 (S) LR4
1" = 20' H, 1" = 10' V

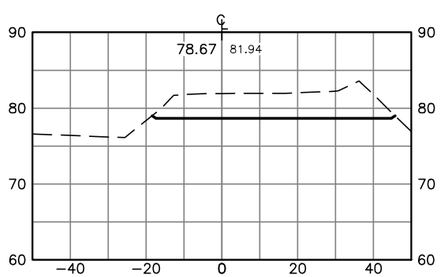

STA. 38+00 (T) LR4
1" = 20' H, 1" = 10' V

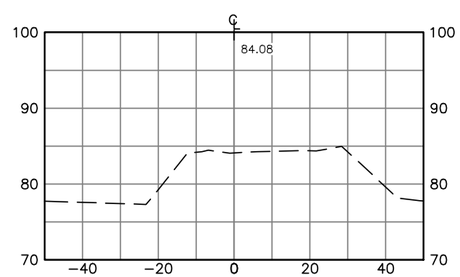

STA. 40+00 (U) LR4
1" = 20' H, 1" = 10' V

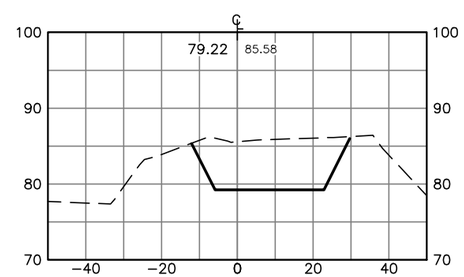

STA. 42+00 (V) LR4
1" = 20' H, 1" = 10' V

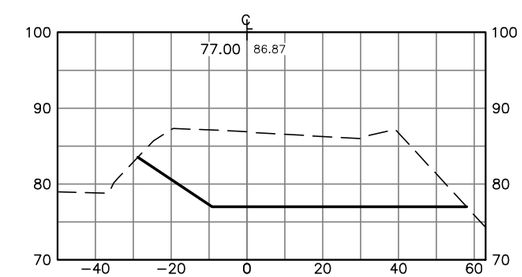

STA. 44+00 (W) LR5
1" = 20' H, 1" = 10' V

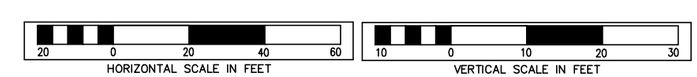

FIELD BOOK:
SURVEYED:
SURVEY BASE MAP:
CHECKED:

NUM.	REVISION	BY	DATE

APPROVED:	JEANNE STYPULA, PE	3-2016
PROJECT MANAGER:	CHRIS BRUMMER, PE	3-2016
DESIGNED:	CHRIS BRUMMER, PE	3-2016
ECOLOGIST:	STEPHANIE SHELTON	3-2016
DESIGN ENTERED:	L. TURNIDGE, E. MARSHALL	3-2016

SRFB # RCO 087-1910C

PROJECT No. 1112049 (FL9001)

CHRISTOPHER JON BRUMMER
STATE OF WASHINGTON
40695
REGISTERED PROFESSIONAL ENGINEER
3/23/16

King County
Department of Natural Resources and Parks
Water and Land Resources Division
River and Floodplain Management Section
Christie True, Director

COUNTYLINE LEVEE SETBACK

LEVEE EXCAVATION CROSS SECTIONS

SHEET 40 OF 58 SHEETS

LD2

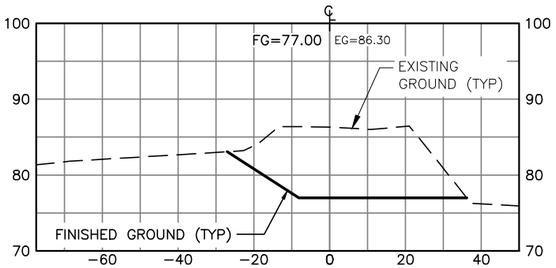

STA. 46+00 (X) LR5
1" = 20' H, 1" = 10' V

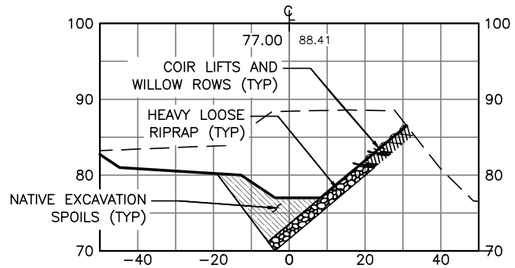

STA. 47+00 (Y) LR5
1" = 20' H, 1" = 10' V

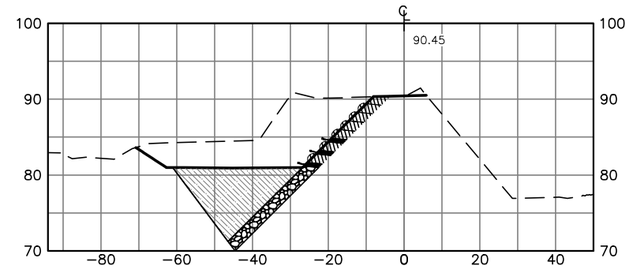

STA. 48+00 (Z) LR5
1" = 20' H, 1" = 10' V

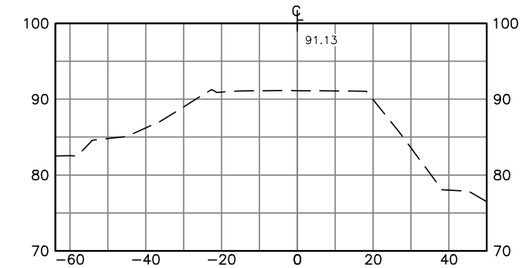

STA. 50+00 (AA) LR5
1" = 20' H, 1" = 10' V

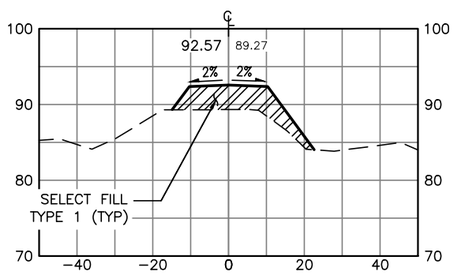

STA. 52+00 (AB) LR5
1" = 20' H, 1" = 10' V

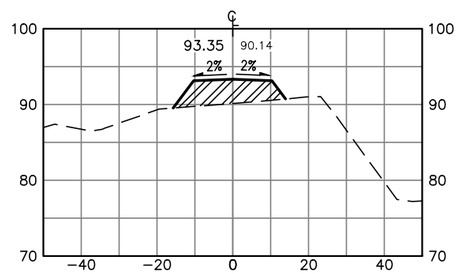

STA. 54+00 (AC) LR6
1" = 20' H, 1" = 10' V

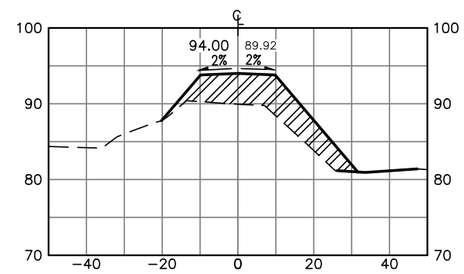

STA. 56+00 (AD) LR6
1" = 20' H, 1" = 10' V

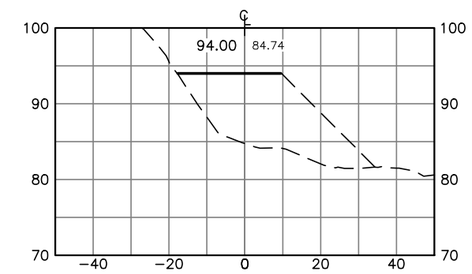

STA. 58+00 (AE) LR6
1" = 20' H, 1" = 10' V

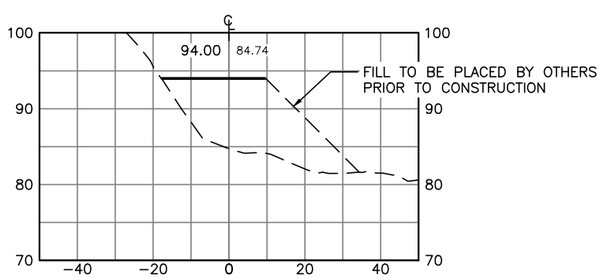

STA. 59+04 (AF) LR6
1" = 20' H, 1" = 10' V

NOTES:

1. SEE DETAIL (1) LD4 FOR HEAVY LOOSE RIPRAP AND COIR LIFTS.
2. SEE DETAIL (2) LD4 FOR LEVEE RESURFACING TYPICAL DETAIL.

HORIZONTAL SCALE IN FEET: 20 0 20 40 60

VERTICAL SCALE IN FEET: 10 0 10 20 30

FIELD BOOK:
SURVEYED:
SURVEY BASE MAP:
CHECKED:

NUM.	REVISION	BY	DATE

APPROVED:	JEANNE STYPULA, PE	3-2016
PROJECT MANAGER:	CHRIS BRUMMER, PE	3-2016
DESIGNED:	CHRIS BRUMMER, PE	3-2016
ECOLOGIST:	STEPHANIE SHELTON	3-2016
DESIGN ENTERED:	L. TURNIDGE, E. MARSHALL	3-2016

SRFB # RCO 087-1910C

PROJECT No. 1112049 (FL9001)

CHRISTOPHER JON BRUMMER, STATE OF WASHINGTON, 40695, REGISTERED PROFESSIONAL ENGINEER
3/23/16

King County
Department of Natural Resources and Parks
Water and Land Resources Division
River and Floodplain Management Section
Christie True, Director

COUNTYLINE LEVEE SETBACK

LEVEE EXCAVATION CROSS SECTIONS

SHEET 41 OF 58 SHEETS

LD3

LEVEE EXCAVATION VOLUMES TABLE:

STATION	COMMON EXCAVATION		SELECT FILL TYPE 1
	END AREA (SF)	VOL CUT (CY)	VOL (CY)
0+00.00	0	0	0
2+00.00	455	1,477	0
3+00.00	518	2,295	0
4+00.00	107	670	0
6+00.00	126	795	0
8+00.00	216	980	0
10+00.00	273	1,670	0
12+00.00	1	1,035	0
14+00.00	57	1,205	0
16+00.00	57	741	0
18+00.00	35	393	0
19+00.00	20	131	0
20+00.00	1	4	0
24+00.00	0	0	0
26+00.00	57	515	0
28+00.00	66	360	0
30+00.00	196	896	0
32+00.00	92	1,061	0
34+00.00	93	723	0
36+00.00	165	1,275	0
38+00.00	203	1,058	0
40+00.00	1	874	0
42+00.00	237	1,566	0
44+00.00	678	4,277	0
46+00.00	428	3,604	0
47+00.00	469	1,933	0
48+00.00	271	949	0
50+00.00	5	1,473	0
52+00.00	38	0	188
54+00.00	123	0	435
56+00.00	69	0	617
57+00.00	79	1	267
58+00.00	175	0	407
59+00.00	0	97	579
59+04.25	0	15	0
TOTAL (AVE END AREA)		32,971	2,494

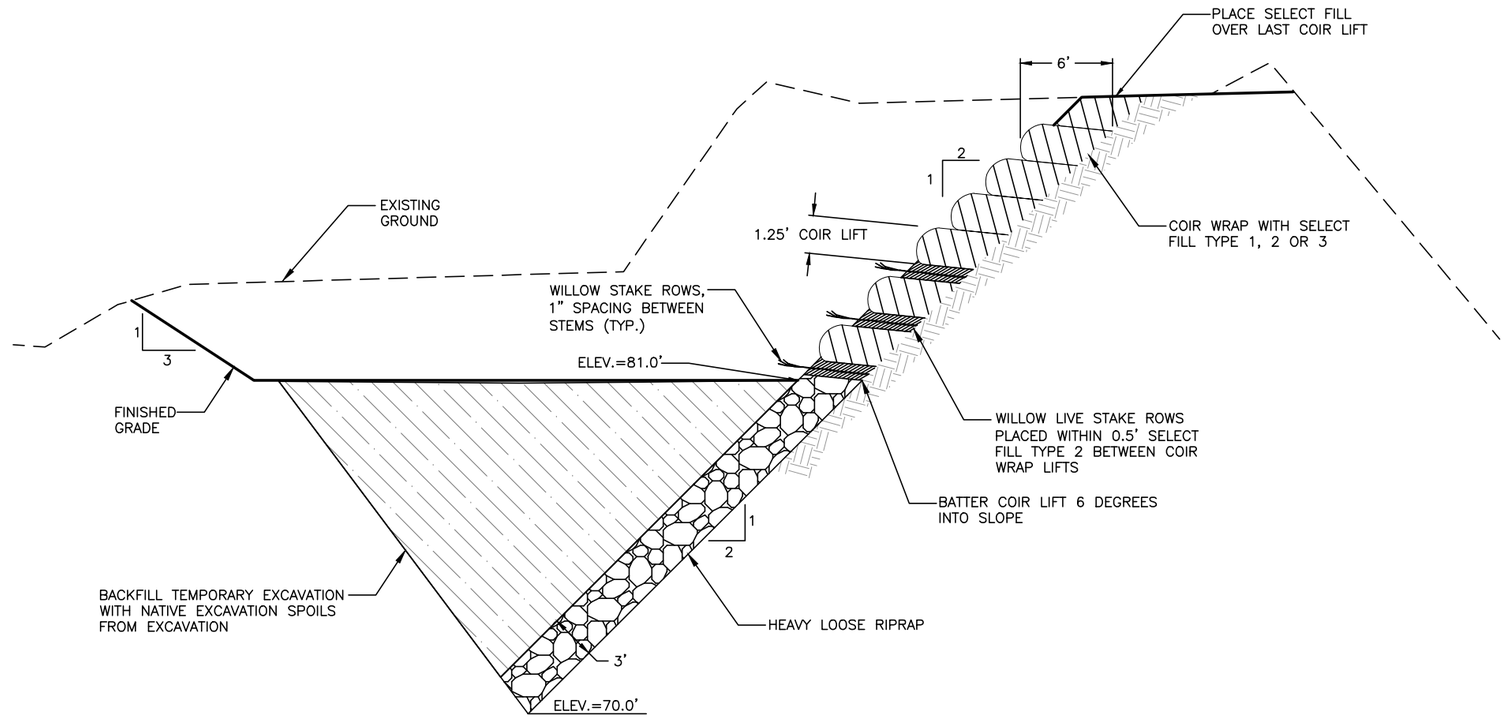

LEVEE TOE AND COIR LIFT WITH WILLOW LIVE STAKE ROWS (1 / LD3)

1"=5' HORIZ. 1"=2.5' VERT.

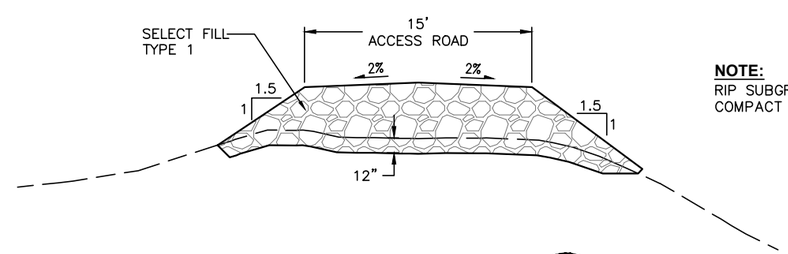

NOTE:
RIP SUBGRADE TO 12" DEPTH AND COMPACT PRIOR TO PLACEMENT OF FILL.

LEVEE RESURFACING (2 / LD3)

1"=5' HORIZ. 1"=2.5' VERT.

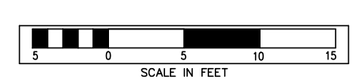

FIELD BOOK:
SURVEYED:
SURVEY BASE MAP:
CHECKED:

NUM.	REVISION	BY	DATE

APPROVED:	JEANNE STYPULA, PE	3-2016
PROJECT MANAGER:	CHRIS BRUMMER, PE	3-2016
DESIGNED:	CHRIS BRUMMER, PE	3-2016
ECOLOGIST:	STEPHANIE SHELTON	3-2016
DESIGN ENTERED:	L. TURNIDGE, E. MARSHALL	3-2016

SRFB # RCO 087-1910C

PROJECT No. 1112049 (FL9001)

CHRISTOPHER JON BRUMMER, STATE OF WASHINGTON, 40695, REGISTERED PROFESSIONAL ENGINEER
3/23/16

King County
Department of Natural Resources and Parks
Water and Land Resources Division
River and Floodplain Management Section
Christie True, Director

COUNTYLINE LEVEE SETBACK

LEVEE EXCAVATION VOLUME TABLE AND DETAILS

SHEET 42 OF 58 SHEETS

LD4

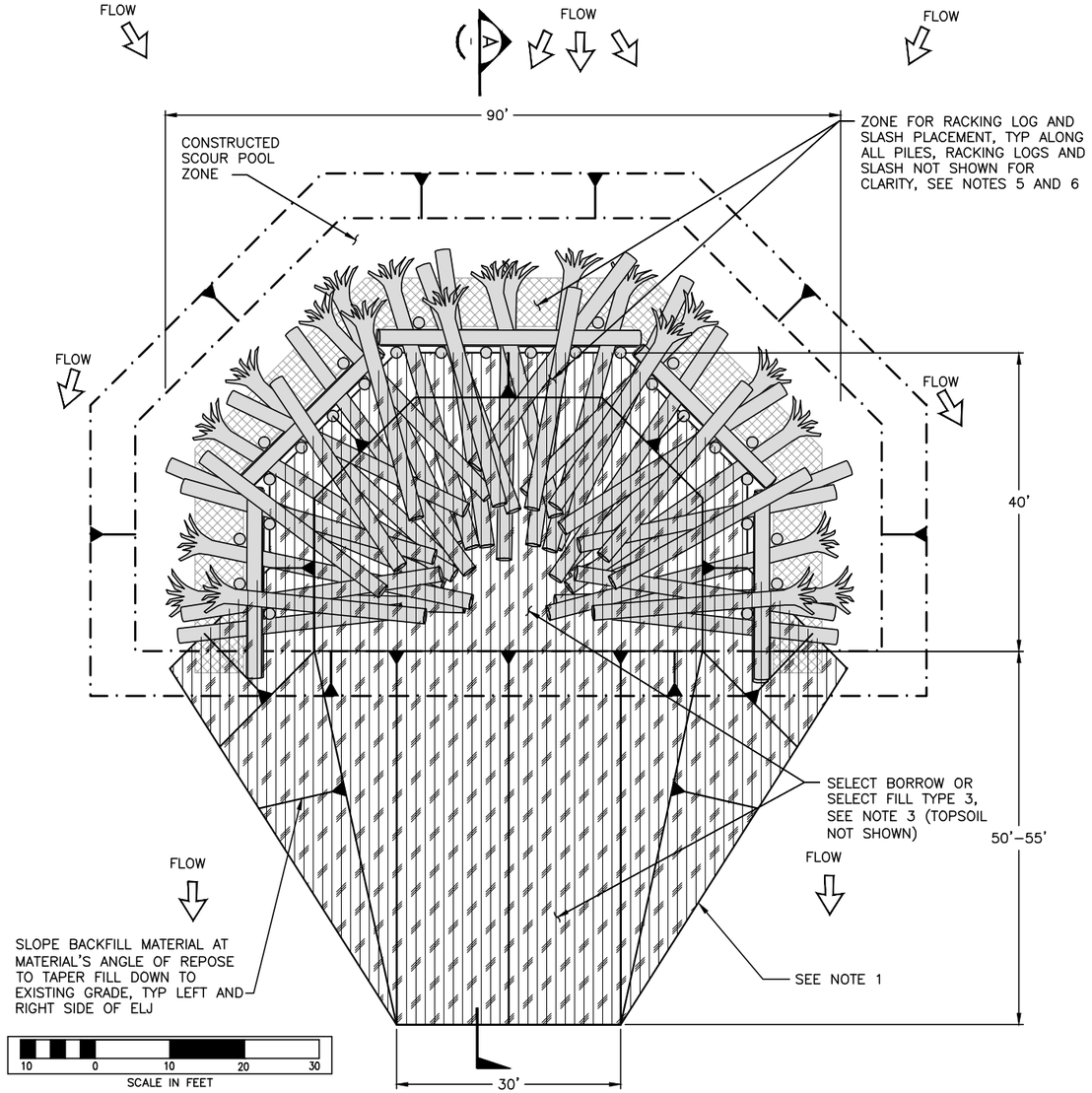

PLAN – LARGE APEX ELJ (1 / SB3)

NOTES:

1. EXTENTS OF BACKFILL AT TOE OF FILL ARE APPROXIMATE AND MAY VARY FROM THAT SHOWN.
2. EXCAVATION LIMITS SHOWN ARE APPROXIMATE AND WILL VARY BASED ON CONSTRUCTION MEANS AND METHODS, SUBSURFACE CONDITIONS, DEPTH OF SURFACE WATER (IF ANY), AND LOCATION OF STRUCTURE. ADJUST EXCAVATION LIMITS AS NECESSARY TO COMPLETE CONSTRUCTION.
3. PLACE SELECT BORROW OR SELECT FILL TYPE 3 BETWEEN LOGS WITHIN INTERIOR CORE OF STRUCTURE AND OVER FINAL LAYER OF LOGS AND COMPACT AS DESCRIBED IN THE SPECIFICATIONS.
4. SEE LOG SCHEDULE ON DWG WD2 FOR DIMENSIONS AND NUMBERS OF EACH LOG TYPE IN STRUCTURE.
5. PLACEMENT OF RACKING LOGS SHOWN IS APPROXIMATE. PLACE RACKING LOGS ALONG UPSTREAM FACE OF STRUCTURE. APPROXIMATELY 1/2 OF RACKING LOGS SHALL BE PLACED ACROSS PILE ROWS (PERPENDICULAR TO FLOW) AND 1/2 OF THE RACKING LOGS PARALLEL TO FLOW AND EXTENDING INTO THE CORE OF THE STRUCTURE BETWEEN HORIZONTAL KEY LOGS. RACKING SHALL BE PLACED WITH EACH LAYER OF KEY LOGS, SHALL BE ANGLED UP AND DOWN FROM THE HORIZONTAL, AND SHALL BE PLACED TO CREATE AN INTERLOCKING MATRIX OF LOGS SECURED BETWEEN VERTICAL PILE LOGS AND HORIZONTAL KEY LOGS. COORDINATE WITH THE PROJECT REPRESENTATIVE PRIOR TO PLACING RACKING LOGS, SLASH AND BACKFILLING.
6. SEE STRUCTURE LAYERING PLAN ON DWG WD2 FOR SLASH PLACEMENT. PLACE SLASH AS SHOWN ON LAYERING PLAN TO FILL VOIDS BETWEEN RACKING LOGS.
7. PLACE 18" OF TOPSOIL OVER SELECT BORROW OR SELECT FILL TYPE 3 BACKFILL MATERIAL, THEN CAP WITH 3" OF WOOD MULCH. SEE DWGS TS1–TS5 FOR TOPSOIL EXTENTS.
8. CABLE LASHING FOR KEY LOGS TO PILES NOT SHOWN FOR CLARITY. SEE STRUCTURE LAYERING PLAN ON DWG WD2 FOR LASHING LOCATIONS AND REFER TO CABLE LASHING NOTES ON THIS SHEET.

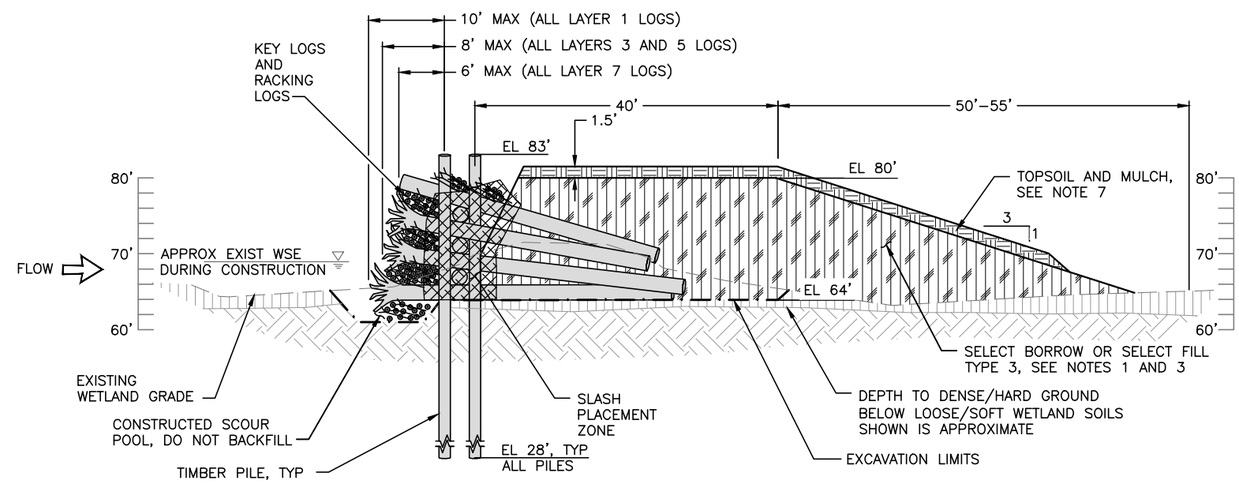

SECTION – LARGE APEX ELJ (A)

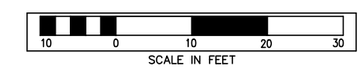

ESTIMATED CONSTRUCTION QUANTITIES FOR ELJ 4:

CONSTRUCTION ELEMENT	UNIT	ELJ 4
EXCAVATION	CY	503
HAUL AND DISPOSE UNSUITABLE MATERIAL	CY	503
FILL – SELECT BORROW OR SELECT FILL TYPE 3	CY	2,986
FILL – TOPSOIL	CY	300
FILL – MULCH	CY	50

LEGEND:

- EXISTING GRADE
- PROPOSED GRADE
- EXCAVATION LIMITS
- SLASH PLACEMENT ZONE (SHOWN ON SECTION ONLY FOR CLARITY)
- RACKING LOG PLACEMENT ZONE
- TOPSOIL AND MULCH
- SELECT BORROW OR SELECT FILL TYPE 3
- EXISTING DENSE/HARD GROUND
- EXISTING LOOSE/SOFT WETLAND SOILS

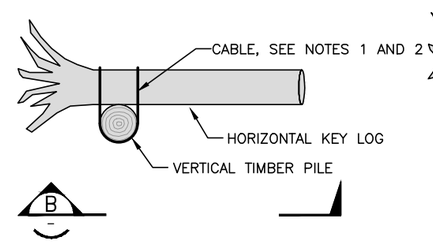

DETAIL – CABLE LASHING (1 / WD2)
SCALE: NTS

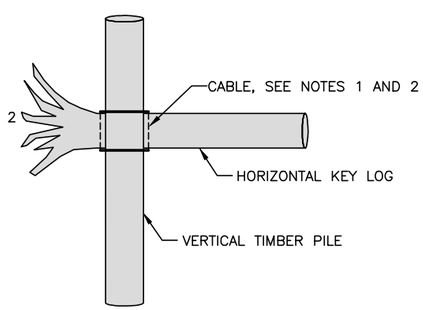

SECTION – CABLE LASHING (B)
SCALE: NTS

CABLE LASHING NOTES:

1. LASH HORIZONTAL KEY LOGS TO VERTICAL TIMBER PILES WITH CABLE AS SHOWN ON DWG WD2 OR AS DIRECTED BY THE PROJECT REPRESENTATIVE. CABLE LASHING SYSTEM SHALL BE PUT IN TENSION TO 1/4 OF THE CABLE WORKING LOAD LIMIT AND BE MAINTAINED DURING CABLE CLAMPING.
2. CABLE LENGTH NEEDED PER LASHING WILL VARY BASED ON DIAMETER OF LOGS BEING LASHED TOGETHER.

FIELD BOOK:
SURVEYED:
SURVEY BASE MAP:
CHECKED:

NUM.	REVISION	BY	DATE

APPROVED:	IAN MOSTRENKO, PE	3–2016
PROJECT MANAGER:	MARK EWBANK, PE	3–2016
DESIGNED:	BRIAN SCOTT	3–2016
ECOLOGIST:	STEPHANIE SHELTON	3–2016
DESIGN ENTERED:	L. TURNIDGE, E. MARSHALL	3–2016

SRFB # RCO 087–1910C
PROJECT No. 1112049 (FL9001)

IAN B. MOSTRENKO, STATE OF WASHINGTON, 36069, REGISTERED PROFESSIONAL ENGINEER
03/23/16

HERRERA

King County
Department of Natural Resources and Parks
Water and Land Resources Division
River and Floodplain Management Section
Christie True, Director

COUNTYLINE LEVEE SETBACK

LARGE APEX ELJ PLAN AND SECTION

SHEET 43 OF 58 SHEETS

WD1

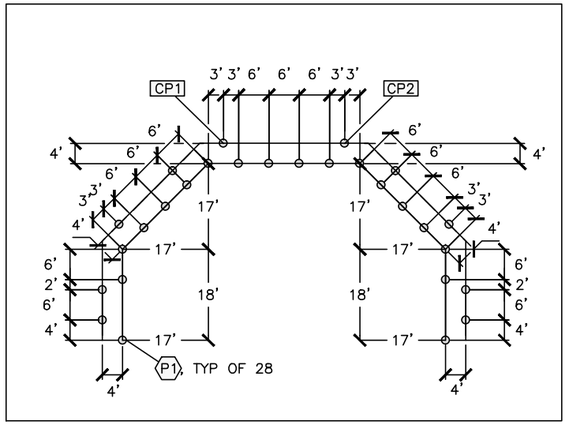

PILES

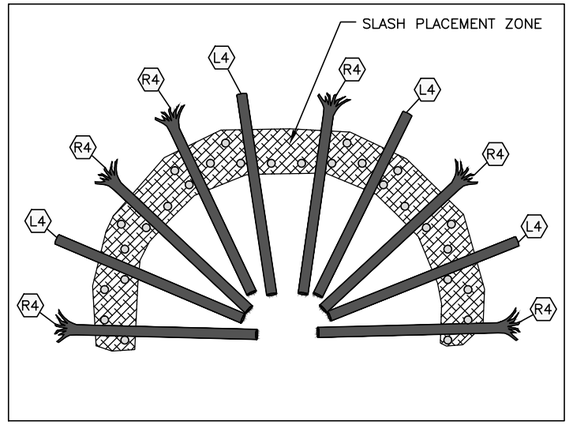

LAYER 1

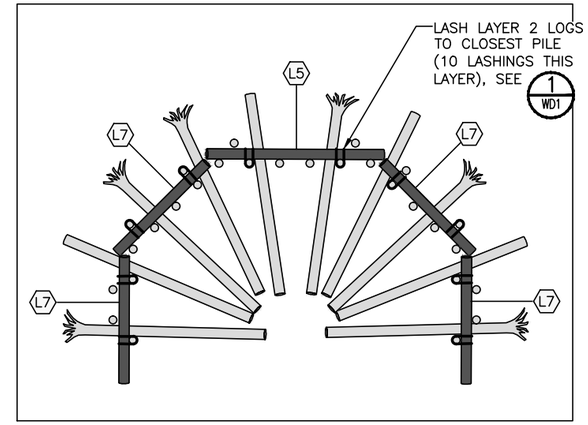

LAYER 2

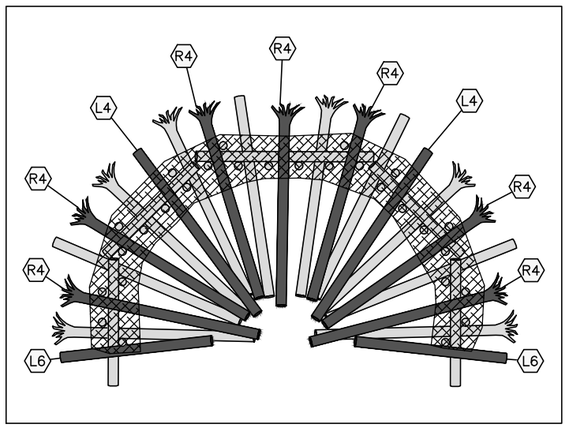

LAYER 3

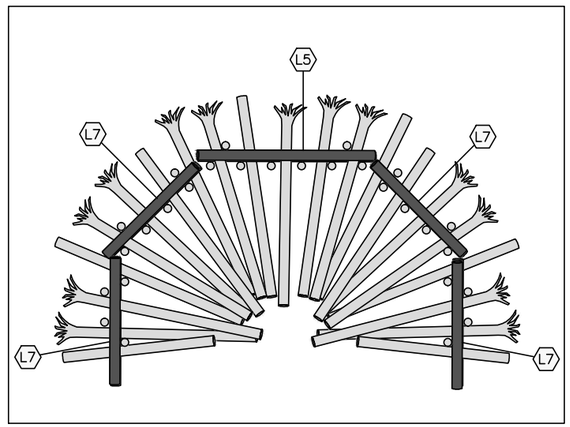

LAYER 4

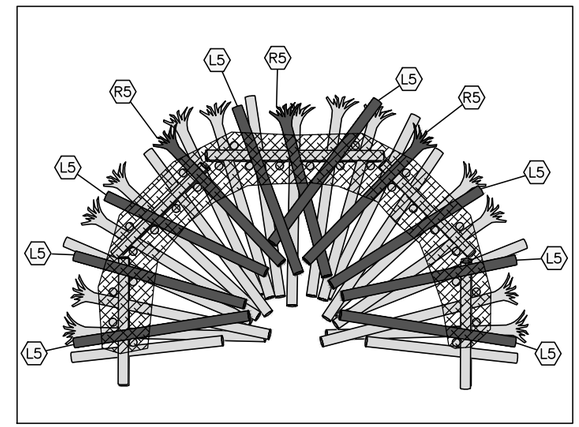

LAYER 5

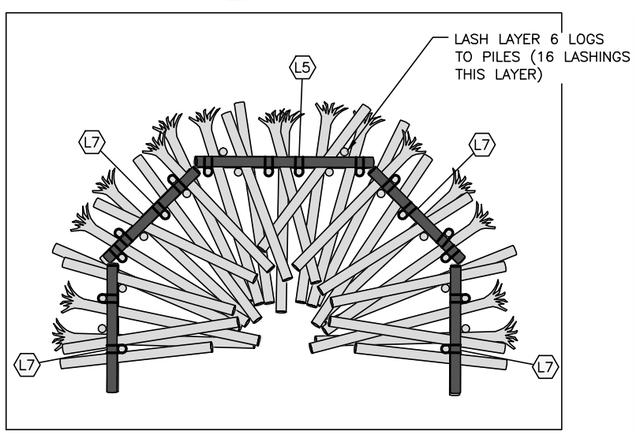

LAYER 6

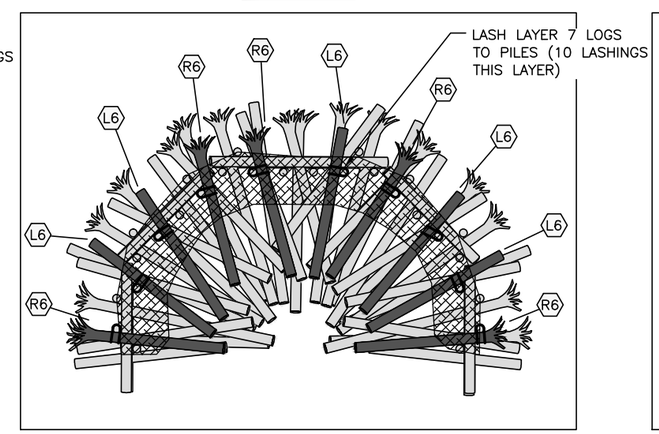

LAYER 7

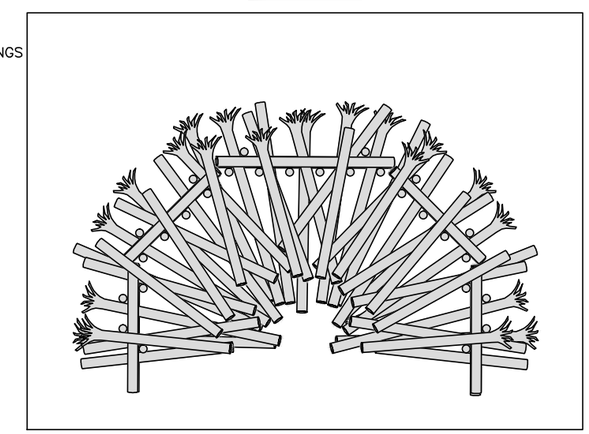

COMPLETE

LOG SCHEDULE:

LOG TYPE	MIN DIA (IN)	LENGTH (FT)	ROOTWAD	TOTAL QTY PER ELJ
P1	18 (BUTT)	55	NO	28
R4	24	40	YES	13
R5	24	35	YES	3
R6	24	30	YES	5
L4	24	40	NO	6
L5	24	35	NO	11
L6	24	30	NO	7
L7	24	25	NO	12
RACKING	6–16	15–30	OPTIONAL	200
SLASH	–	–	–	200 CY

LEGEND:

- CURRENT LAYER KEY LOG
- PREVIOUS LAYER KEY LOG (AFTER BACKFILLING)
- VERTICAL PILE LOG
- SLASH PLACEMENT ZONE
- L1 — KEY LOG TYPE ID (LOG TYPE L1)
- CP1 — STRUCTURE CONTROL POINT (1)

NOTES:

1. STRUCTURE GENERAL LOCATION AND ORIENTATION SHALL BE STAKED BY THE CONTRACTOR. FINAL STRUCTURE LOCATION AND ORIENTATION TO BE FIELD VERIFIED BY THE PROJECT REPRESENTATIVE FOLLOWING CONTRACTOR STAKING.
2. ALL PILE LOCATIONS SHALL BE STAKED BY THE CONTRACTOR AND APPROVED BY THE PROJECT REPRESENTATIVE PRIOR TO PILE INSTALLATION.
3. ALL PILE LOCATIONS SHALL BE BASED ON THE LOCATION OF THE STRUCTURE CONTROL POINTS AND SHALL BE WITHIN 3" OF THE LOCATION SHOWN ON THE DRAWINGS.
4. LOG MATERIALS SHALL BE PLACED AT THE LOCATIONS AND ORIENTATIONS SPECIFIED ON THE DRAWINGS OR AS DIRECTED BY THE PROJECT REPRESENTATIVE. TRIM CUT ENDS OF HORIZONTAL KEY LOGS TO FIT AS REQUIRED.
5. PLACE SLASH OVER AND BETWEEN KEY LOGS AND PILES AS SHOWN FOR EACH LAYER SPECIFIED FOLLOWING PLACEMENT OF KEY LOGS AND RACKING LOGS. PLACE APPROXIMATELY 2' TO 3' OF BACKFILL MATERIAL OVER THE INSIDE HALF OF THE WIDTH OF SLASH TO SECURE IN PLACE SUCH THAT SLASH IS VISIBLE FOLLOWING CONSTRUCTION. COORDINATE WITH THE PROJECT REPRESENTATIVE PRIOR TO PLACING RACKING AND SLASH.
6. SEE DWG SB6 FOR COORDINATES OF ELJ CONTROL POINTS.
7. SEE DWG WD1 FOR CABLE LASHING DETAIL.

15 0 15 30 45
SCALE IN FEET

FIELD BOOK:
SURVEYED:
SURVEY BASE MAP:
CHECKED:

NUM.	REVISION	BY	DATE

APPROVED:	IAN MOSTRENKO, PE	3–2016
PROJECT MANAGER:	MARK EWBANK, PE	3–2016
DESIGNED:	BRIAN SCOTT	3–2016
ECOLOGIST:	STEPHANIE SHELTON	3–2016
DESIGN ENTERED:	L. TURNIDGE, E. MARSHALL	3–2016

SRFB # RCO 087–1910C

PROJECT No. 1112049 (FL9001)

IAN R. MOSTRENKO, STATE OF WASHINGTON, 36069, REGISTERED PROFESSIONAL ENGINEER
03/23/16

HERRERA

King County
Department of Natural Resources and Parks
Water and Land Resources Division
River and Floodplain Management Section
Christie True, Director

COUNTYLINE LEVEE SETBACK

LARGE APEX ELJ LAYERING PLAN

SHEET 44 OF 58 SHEETS

WD2

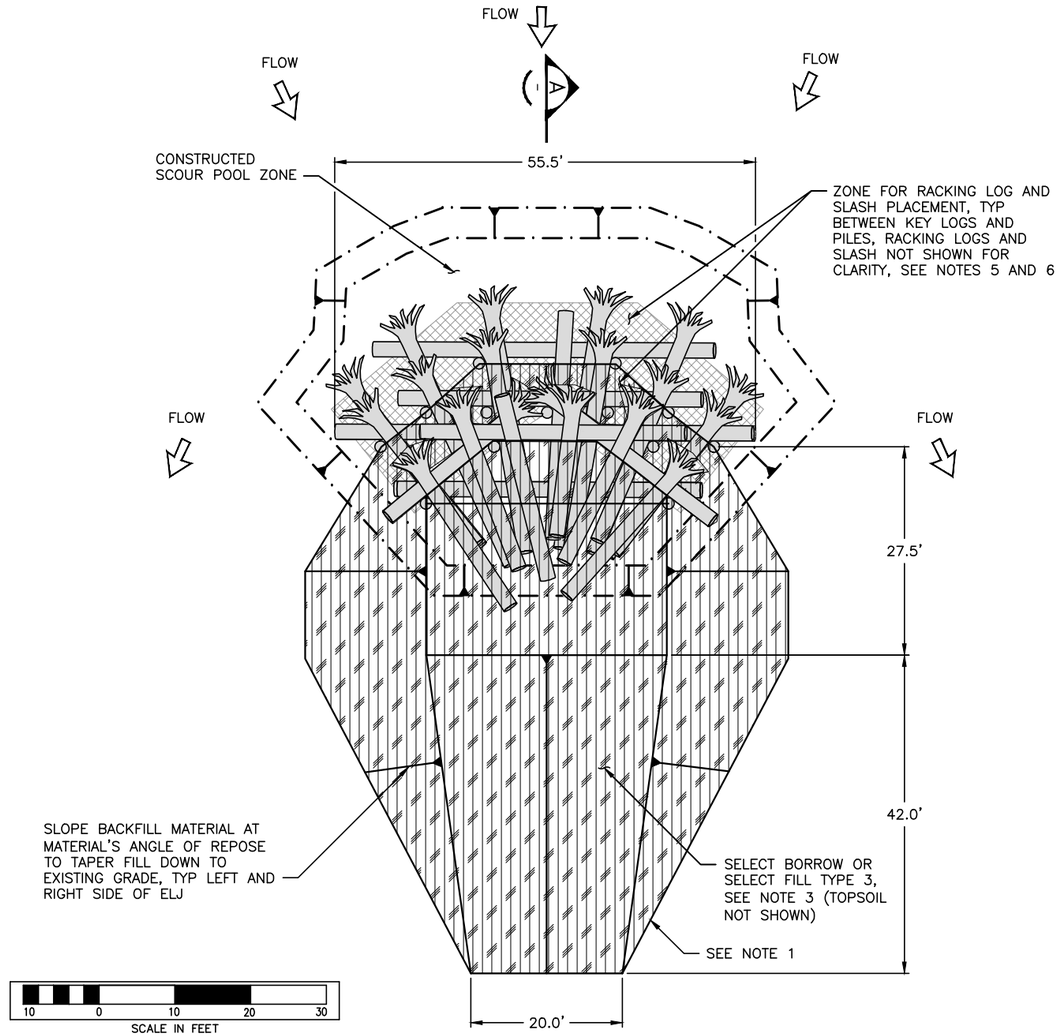

PLAN – SMALL APEX ELJ (1 / SB6)

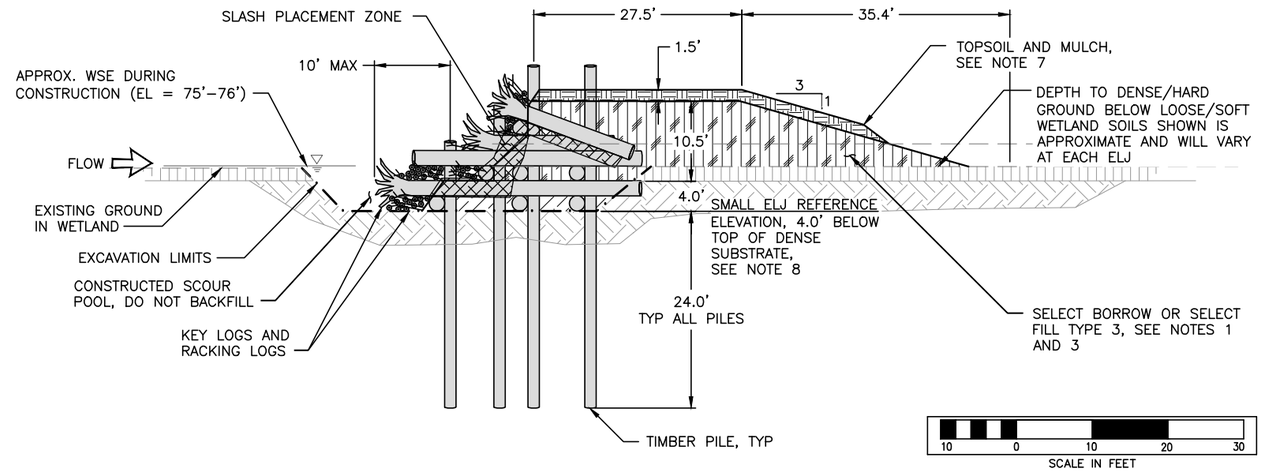

SECTION – SMALL APEX ELJ (A)

LEGEND:

- EXISTING GRADE
- PROPOSED GRADE
- EXCAVATION LIMITS
- SLASH PLACEMENT ZONE (SHOWN ON SECTION ONLY FOR CLARITY)
- RACKING LOG PLACEMENT ZONE
- TOPSOIL AND MULCH
- SELECT BORROW OR SELECT FILL TYPE 3
- EXISTING DENSE/HARD GROUND
- EXISTING LOOSE/SOFT WETLAND SOILS

NOTES:

1. EXTENTS OF BACKFILL AT TOE OF FILL SHOWN ARE APPROXIMATE AND WILL VARY FOR EACH ELJ.
2. EXCAVATION LIMITS SHOWN ARE APPROXIMATE AND WILL VARY BASED ON CONSTRUCTION MEANS AND METHODS, SUBSURFACE CONDITIONS AND LOCATION OF STRUCTURE. ADJUST EXCAVATION LIMITS AS NECESSARY TO COMPLETE CONSTRUCTION.
3. PLACE SELECT BORROW OR SELECT FILL TYPE 3 BETWEEN LOGS WITHIN INTERIOR CORE OF STRUCTURE AND OVER FINAL LAYER OF LOGS AND COMPACT AS DESCRIBED IN THE SPECIFICATIONS.
4. SEE LOG SCHEDULE ON DWG WD4 FOR DIMENSIONS AND NUMBERS OF EACH LOG TYPE IN STRUCTURE.
5. PLACEMENT OF RACKING LOGS SHOWN IS APPROXIMATE. PLACE RACKING LOGS ALONG UPSTREAM FACE OF STRUCTURE. APPROXIMATELY 1/2 OF RACKING LOGS SHALL BE PLACED ACROSS PILE ROWS (PERPENDICULAR TO FLOW) AND 1/2 OF THE RACKING LOGS PARALLEL TO FLOW AND EXTENDING INTO THE CORE OF THE STRUCTURE BETWEEN HORIZONTAL KEY LOGS. RACKING SHALL BE PLACED WITH EACH LAYER OF KEY LOGS, SHALL BE ANGLED UP AND DOWN FROM THE HORIZONTAL, AND SHALL BE PLACED TO CREATE AN INTERLOCKING MATRIX OF LOGS SECURED BETWEEN VERTICAL PILE LOGS AND HORIZONTAL KEY LOGS. COORDINATE WITH THE PROJECT REPRESENTATIVE PRIOR TO PLACING RACKING LOGS, SLASH AND BACKFILLING.
6. SEE STRUCTURE LAYERING PLAN ON DWG WD4 FOR SLASH PLACEMENT. SLASH NOT SHOWN HERE FOR CLARITY. PLACE SLASH AS SHOWN ON LAYERING PLAN TO FILL VOIDS BETWEEN RACKING LOGS.
7. PLACE 18" OF TOPSOIL OVER SELECT BORROW OR SELECT FILL TYPE 3 BACKFILL MATERIAL, THEN CAP WITH 3" OF WOOD MULCH. SEE DWGS TS1–TS5 FOR TOPSOIL EXTENTS.
8. CONFIRM PRESENCE AND ELEVATION OF TOP OF DENSE/HARD GROUND WITH PROJECT REPRESENTATIVE BEFORE EXCAVATING TO ESTABLISH REFERENCE ELEVATION FOR EXCAVATION AND PILE INSTALLATION. PROJECT REPRESENTATIVE MAY CHANGE EXCAVATION DEPTH AND REFERENCE ELEVATION BASED ON DEPTH OF LOOSE/SOFT WETLAND SOILS.
9. TRIM TOPS OF PILES FOLLOWING ELJ CONSTRUCTION AS DIRECTED BY THE PROJECT REPRESENTATIVE.

ESTIMATED CONSTRUCTION QUANTITIES FOR ELJs 1, 2, AND 3:

CONSTRUCTION ELEMENT	UNIT	ELJ 1	ELJ 2	ELJ 3	TOTAL
EXCAVATION	CY	434	436	323	1,193
HAUL AND DISPOSE UNSUITABLE MATERIAL	CY	434	436	323	1,193
FILL – SELECT BORROW OR SELECT FILL TYPE 3	CY	1,285	1,257	1,213	3,755
FILL – TOPSOIL	CY	205	205	205	615
FILL – MULCH	CY	34	34	34	102

FIELD BOOK:
SURVEYED:
SURVEY BASE MAP:
CHECKED:

NUM.	REVISION	BY	DATE

APPROVED:	IAN MOSTRENKO, PE	3–2016
PROJECT MANAGER:	MARK EWBANK, PE	3–2016
DESIGNED:	BRIAN SCOTT	3–2016
ECOLOGIST:	STEPHANIE SHELTON	3–2016
DESIGN ENTERED:	L. TURNIDGE, E. MARSHALL	3–2016

SRFB # RCO 087–1910C

PROJECT No. 1112049 (FL9001)

IAN B. MOSTRENKO, STATE OF WASHINGTON, 36069, REGISTERED PROFESSIONAL ENGINEER
03/23/16

HERRERA

King County
Department of Natural Resources and Parks
Water and Land Resources Division
River and Floodplain Management Section
Christie True, Director

COUNTYLINE LEVEE SETBACK

SMALL APEX ELJ PLAN AND SECTION

SHEET 45 OF 58 SHEETS

WD3

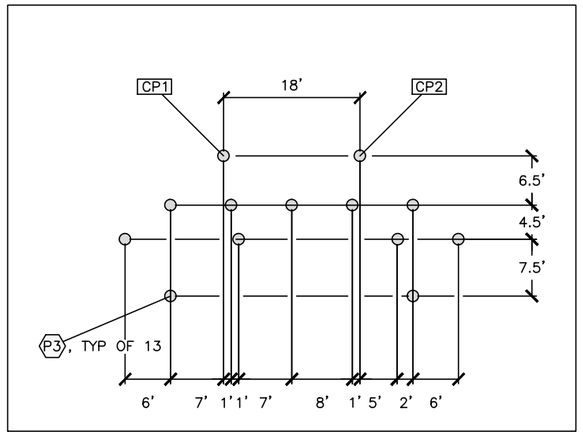

PILES

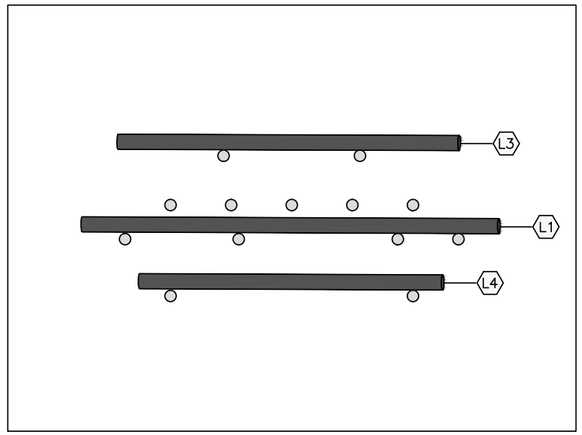

LAYER 1

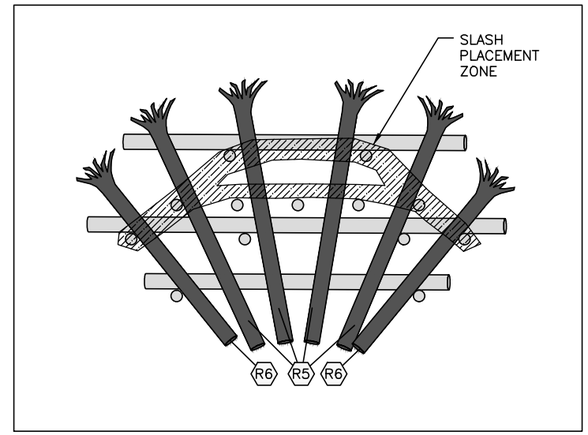

LAYER 2

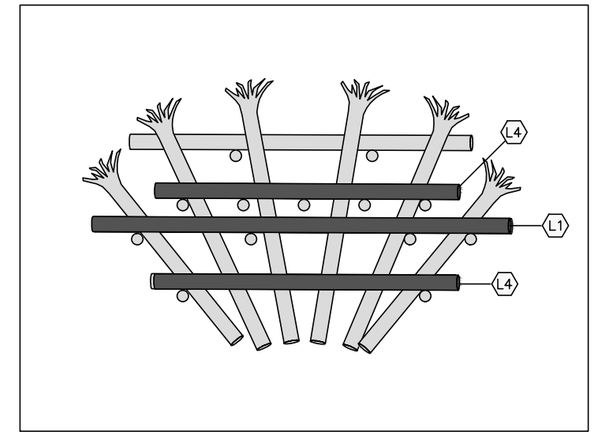

LAYER 3

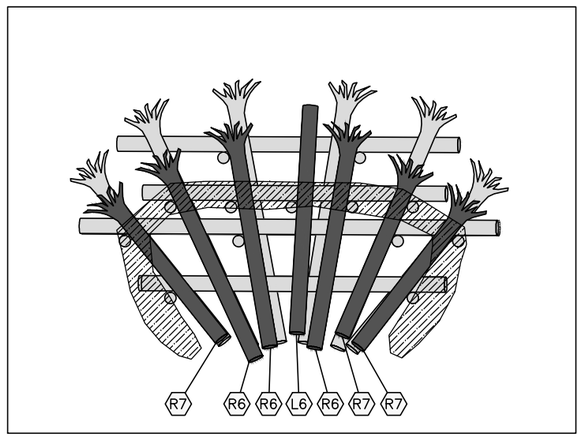

LAYER 4

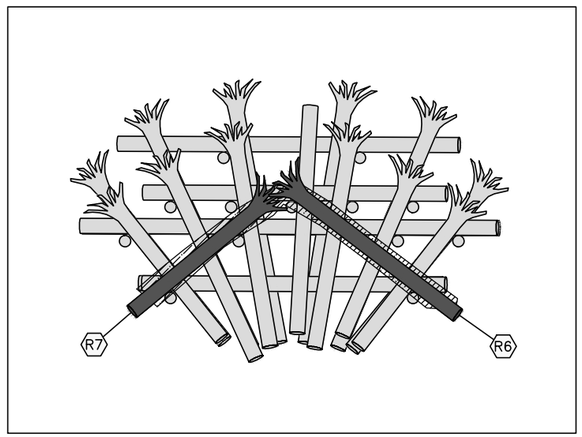

LAYER 5

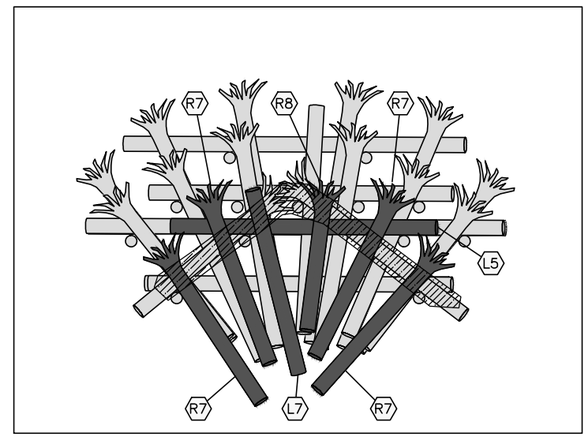

LAYER 6

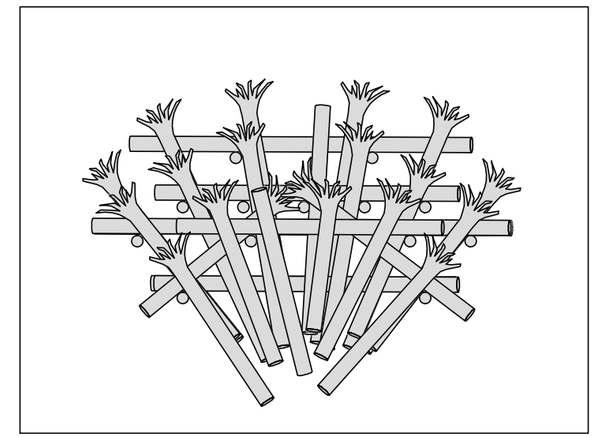

COMPLETE

LOG SCHEDULE:

LOG TYPE	MIN DIA (IN)	LENGTH (FT)	ROOTWAD	TOTAL QTY PER ELJ
P3	18 (BUTT)	45	NO	13
R5	24	35	YES	4
R6	24	30	YES	6
R7	24	25	YES	8
R8	24	20	YES	1
L1	24	55	NO	2
L3	24	45	NO	1
L4	24	40	NO	3
L5	24	35	NO	1
L6	24	30	NO	1
L7	24	25	NO	1
RACKING	6–16	15–30	OPTIONAL	100
SLASH				80 CY

NOTES:

1. STRUCTURE GENERAL LOCATION AND ORIENTATION SHALL BE STAKED BY THE CONTRACTOR. FINAL STRUCTURE LOCATION AND ORIENTATION TO BE FIELD VERIFIED BY THE PROJECT REPRESENTATIVE FOLLOWING CONTRACTOR STAKING.
2. ALL PILE LOCATIONS SHALL BE STAKED BY THE CONTRACTOR AND APPROVED BY THE PROJECT REPRESENTATIVE PRIOR TO PILE INSTALLATION.
3. ALL PILE LOCATIONS SHALL BE BASED ON THE LOCATION OF THE STRUCTURE CONTROL POINTS AND SHALL BE WITHIN 3" OF THE LOCATION SHOWN ON THE DRAWINGS.
4. LOG MATERIALS SHALL BE PLACED AT THE LOCATIONS AND ORIENTATIONS SPECIFIED ON THE DRAWINGS OR AS DIRECTED BY THE PROJECT REPRESENTATIVE. TRIM CUT ENDS OF HORIZONTAL KEY LOGS TO FIT AS REQUIRED.
5. PLACE SLASH OVER AND BETWEEN KEY LOGS AND PILES AS SHOWN FOR EACH LAYER SPECIFIED FOLLOWING PLACEMENT OF KEY LOGS AND RACKING LOGS. PLACE APPROXIMATELY 2' TO 3' OF BACKFILL MATERIAL OVER THE INSIDE HALF OF THE WIDTH OF SLASH TO SECURE IN PLACE SUCH THAT SLASH IS VISIBLE FOLLOWING CONSTRUCTION. COORDINATE WITH THE PROJECT REPRESENTATIVE PRIOR TO PLACING RACKING AND SLASH.
6. SEE DWG SB6 FOR COORDINATES OF ELJ CONTROL POINTS.

10 0 10 20 30
SCALE IN FEET

LEGEND:

- CURRENT LAYER KEY LOG
- PREVIOUS LAYER KEY LOG (AFTER BACKFILLING)
- VERTICAL PILE LOG
- SLASH PLACEMENT ZONE
- L1 — KEY LOG TYPE ID (LOG TYPE L1)
- CP1 — STRUCTURE CONTROL POINT (1)

FIELD BOOK:
SURVEYED:
SURVEY BASE MAP:
CHECKED:

NUM.	REVISION	BY	DATE

APPROVED:	IAN MOSTRENKO, PE	3–2016
PROJECT MANAGER:	MARK EWBANK, PE	3–2016
DESIGNED:	BRIAN SCOTT	3–2016
ECOLOGIST:	STEPHANIE SHELTON	3–2016
DESIGN ENTERED:	L. TURNIDGE, E. MARSHALL	3–2016

SRFB # RCO 087–1910C

PROJECT No. 1112049 (FL9001)

IAN R. MOSTRENKO, STATE OF WASHINGTON, 36069, REGISTERED PROFESSIONAL ENGINEER
03/23/16

HERRERA

King County
Department of Natural Resources and Parks
Water and Land Resources Division
River and Floodplain Management Section
Christie True, Director

COUNTYLINE LEVEE SETBACK

SMALL APEX ELJ LAYERING PLAN

SHEET 46 OF 58 SHEETS

WD4

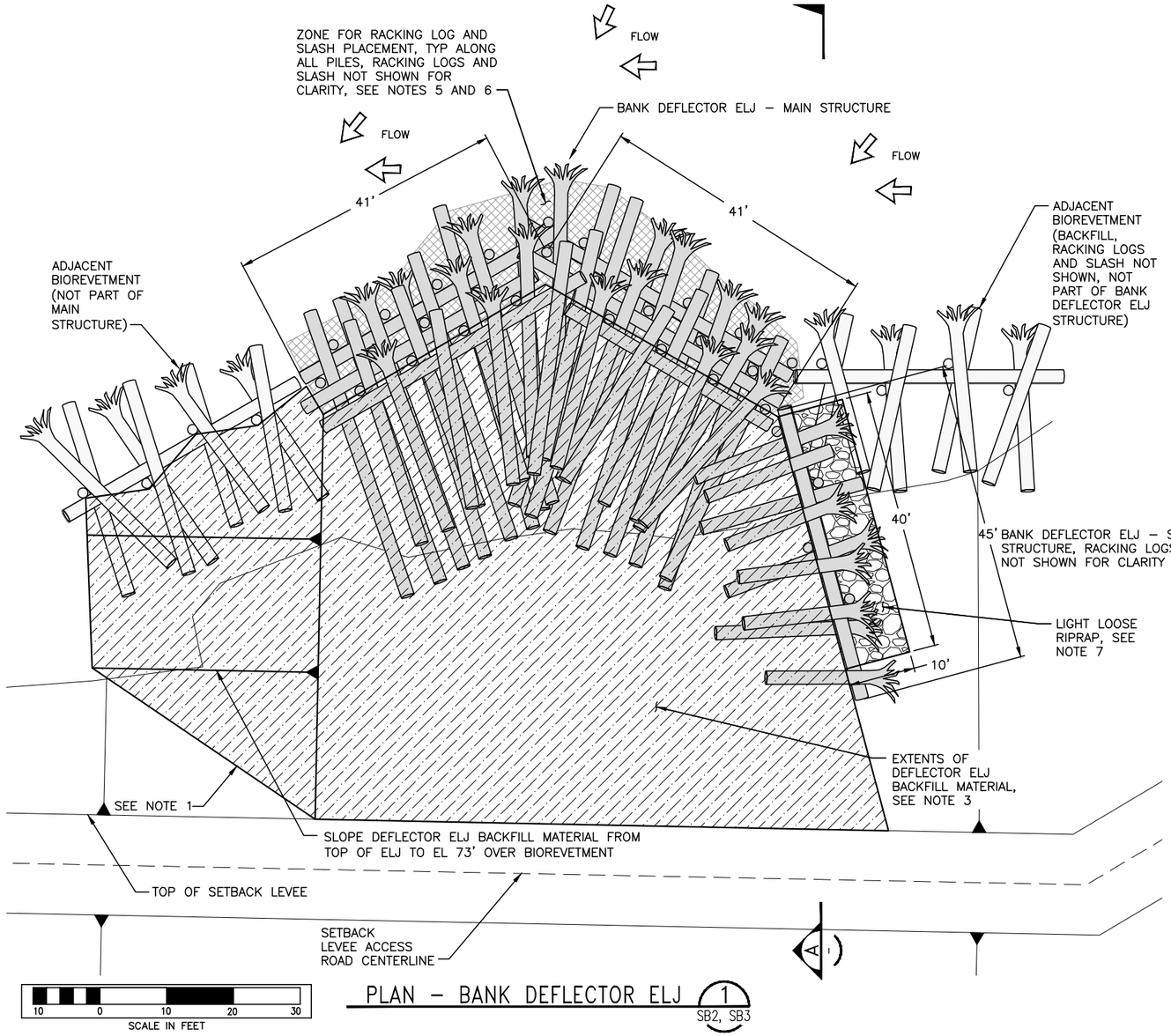

PLAN – BANK DEFLECTOR ELJ 1 SB2, SB3

LEGEND:

- EXISTING GRADE
- PROPOSED GRADE
- SLASH PLACEMENT ZONE (SHOWN ON SECTION ONLY FOR CLARITY)
- RACKING LOG PLACEMENT ZONE
- TOPSOIL AND MULCH
- DEFLECTOR ELJ BACKFILL MATERIAL
- LIGHT LOOSE RIPRAP
- EXISTING SUBSTRATE

NOTES:

1. EXTENTS OF BACKFILL AT TOE OF FILL SHOWN ARE APPROXIMATE AND WILL VARY FOR EACH ELJ. SEE DWG SB2 AND SB3 FOR FINAL GRADING OVER ELJs 5, 6, 7 AND 8.
2. EXCAVATION LIMITS ARE APPROXIMATE AND WILL VARY BASED ON CONSTRUCTION MEANS AND METHODS, SUBSURFACE CONDITIONS AND LOCATION OF STRUCTURE. CONTRACTOR SHALL ADJUST EXCAVATION LIMITS AS NECESSARY TO COMPLETE CONSTRUCTION. SEE DWG SB2, SB3, SD1, SD2, SD3 AND ED4 FOR EXCAVATION LIMITS FOR ELJs 5, 6, 7, AND 8.
3. BACKFILL ELJ 5 WITH SELECT BORROW OR SELECT FILL TYPE 3 TO WITHIN 1.5' OF TOP OF STRUCTURE, THEN PLACE TOPSOIL. FOR ELJs 6, 7 AND 8 BACKFILL WITH LEVEE TOE ROCK UP TO ELEVATION 70', THEN CONTINUE BACKFILLING WITH SELECT BORROW OR SELECT FILL TYPE 3 TO WITHIN 1.5' OF TOP OF STRUCTURE, THEN PLACE TOPSOIL. FILL VOIDS IN LEVEE TOE ROCK WITH SELECT BORROW OR SELECT FILL TYPE 3.
4. SEE LOG SCHEDULE ON DWG WD6 FOR DIMENSIONS AND NUMBERS OF EACH LOG TYPE IN STRUCTURE.
5. PLACEMENT OF RACKING LOGS SHOWN IS APPROXIMATE. PLACE RACKING LOGS ALONG UPSTREAM FACE OF STRUCTURE. APPROXIMATELY 1/2 OF RACKING LOGS SHALL BE PLACED ACROSS PILE ROWS (PERPENDICULAR TO FLOW) AND 1/2 OF THE RACKING LOGS PARALLEL TO FLOW AND EXTENDING INTO THE CORE OF THE STRUCTURE BETWEEN HORIZONTAL KEY LOGS. RACKING SHALL BE PLACED WITH EACH LAYER OF KEY LOGS, SHALL BE ANGLED UP AND DOWN FROM THE HORIZONTAL, AND SHALL BE PLACED TO CREATE AN INTERLOCKING MATRIX OF LOGS SECURED BETWEEN VERTICAL PILE LOGS AND HORIZONTAL KEY LOGS. COORDINATE WITH THE PROJECT REPRESENTATIVE PRIOR TO PLACING RACKING LOGS, SLASH AND BACKFILLING.
6. SEE STRUCTURE LAYERING PLAN ON DWG WD6 FOR SLASH PLACEMENT. SLASH NOT SHOWN HERE FOR CLARITY. PLACE SLASH AT SAME TIME AS RACKING LOGS TO FILL VOIDS BETWEEN RACKING LOGS.
7. PLACE A 3' DEEP LAYER OF LIGHT LOOSE RIPRAP TO THE DIMENSIONS SHOWN. TOP OF RIPRAP SHALL BE 1' BELOW THE ELEVATION OF BACKFILL OVER THE ADJACENT BIOREVETMENT. PLACE 1' OF TOPSOIL THEN 3" OF WOOD MULCH OVER THE RIPRAP.
8. PLACE 18" OF TOPSOIL OVER DEFLECTOR ELJ BACKFILL MATERIAL, THEN CAP WITH 3" OF WOOD MULCH. SEE DWGS TS1–TS5 FOR TOPSOIL EXTENTS.
9. TRIM TOPS OF PILES FOLLOWING ELJ CONSTRUCTION AS DIRECTED BY THE PROJECT REPRESENTATIVE.

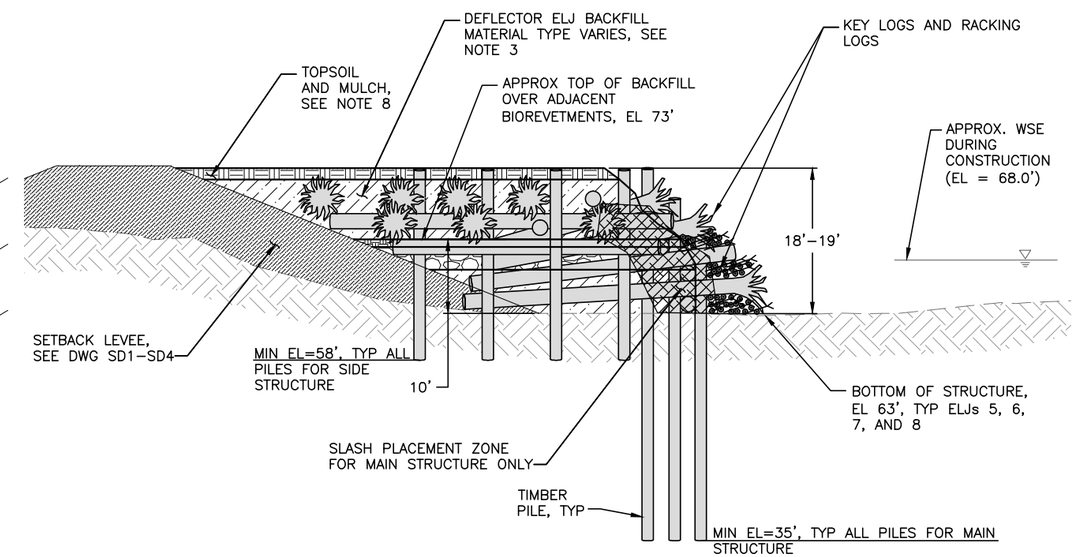

SECTION – BANK DEFLECTOR ELJ A

ESTIMATED CONSTRUCTION QUANTITIES FOR ELJs 5, 6, 7, AND 8:

CONSTRUCTION ELEMENT	UNIT	ELJ 5	ELJ 6	ELJ 7	ELJ 8	TOTAL
EXCAVATION	CY	1,038	683	44	1,570	3,335
HAUL AND DISPOSE UNSUITABLE MATERIAL	CY	1,038	683	44	1,570	3,335
FILL – SELECT BORROW OR SELECT FILL TYPE 3	CY	3,108	1,527	1,944	1,508	8,087
FILL – LEVEE TOE ROCK (BELOW EL 70')	CY	0	973	1,135	1,050	3,158
FILL – LIGHT LOOSE RIPRAP	TN	61	61	61	61	244
FILL – TOPSOIL	CY	356	256	341	246	1,199
FILL – MULCH	CY	59	43	57	41	200

FIELD BOOK:
SURVEYED:
SURVEY BASE MAP:
CHECKED:

NUM.	REVISION	BY	DATE

APPROVED:	IAN MOSTRENKO, PE	3–2016
PROJECT MANAGER:	MARK EWBANK, PE	3–2016
DESIGNED:	BRIAN SCOTT	3–2016
ECOLOGIST:	STEPHANIE SHELTON	3–2016
DESIGN ENTERED:	L. TURNIDGE, E. MARSHALL	3–2016

SRFB # RCO 087–1910C

PROJECT No. 1112049 (FL9001)

IAN E. MOSTRENKO, STATE OF WASHINGTON, 36069, REGISTERED PROFESSIONAL ENGINEER
03/23/16

HERRERA

King County
Department of Natural Resources and Parks
Water and Land Resources Division
River and Floodplain Management Section
Christie True, Director

COUNTYLINE LEVEE SETBACK

BANK DEFLECTOR ELJ PLAN AND SECTION

SHEET 47 OF 58 SHEETS

WD5

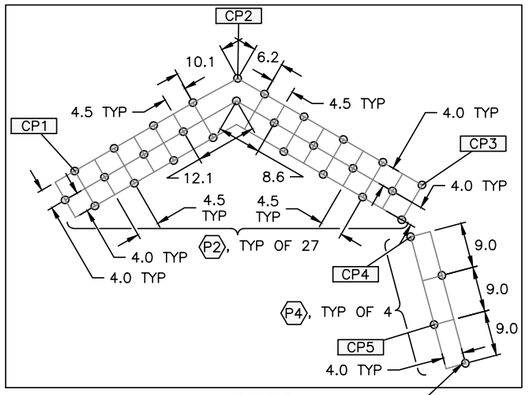

PILES

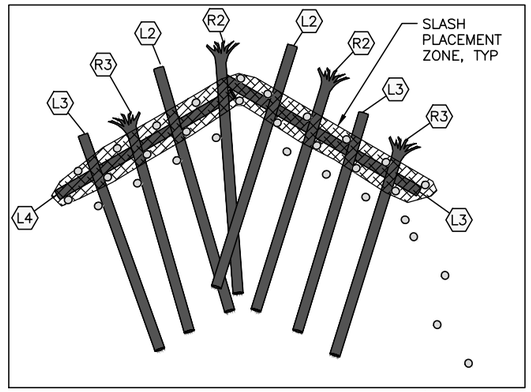

LAYER 1 (ELJ 5, 6, 7 & 8)

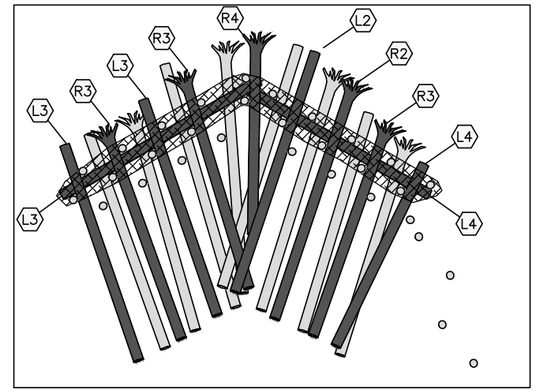

LAYER 2 (ELJ 5, 6, 7 & 8)

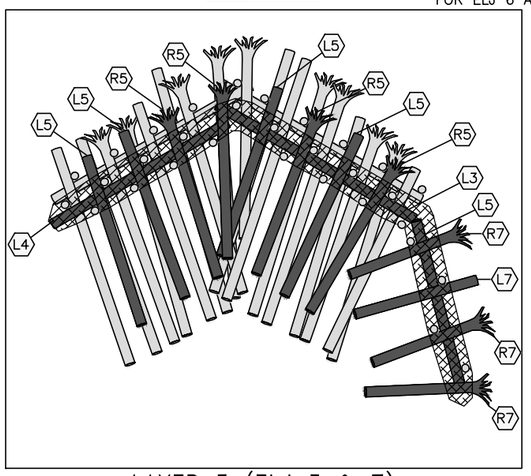

LAYER 3 (ELJ 5 & 7)

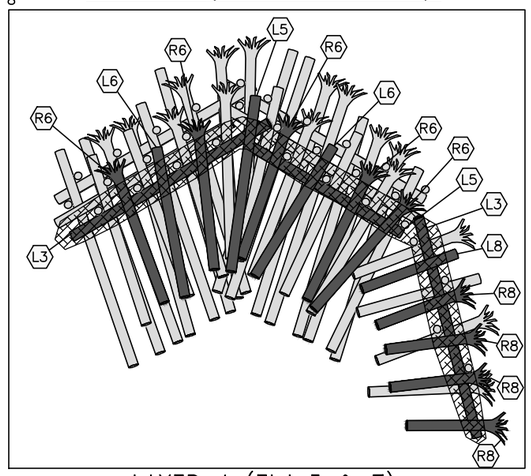

LAYER 4 (ELJ 5 & 7)

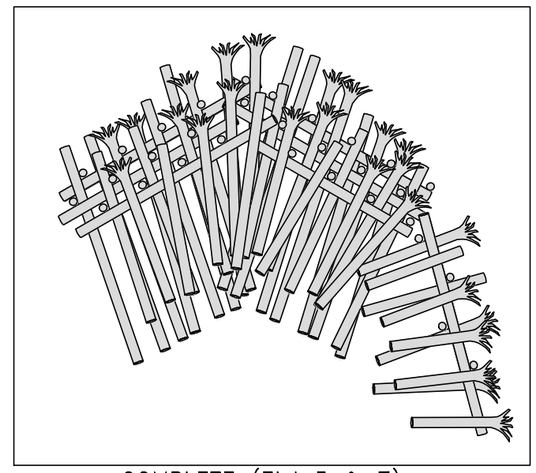

COMPLETE (ELJ 5 & 7)

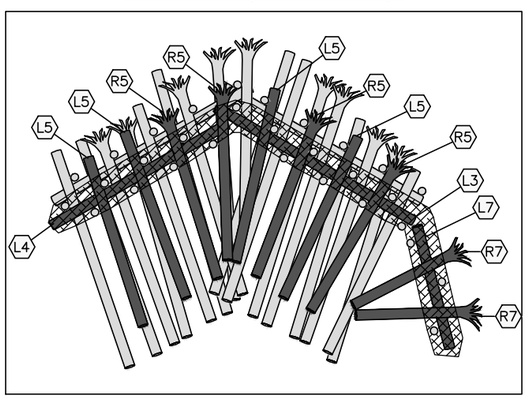

LAYER 3 (ELJ 6 & 8)

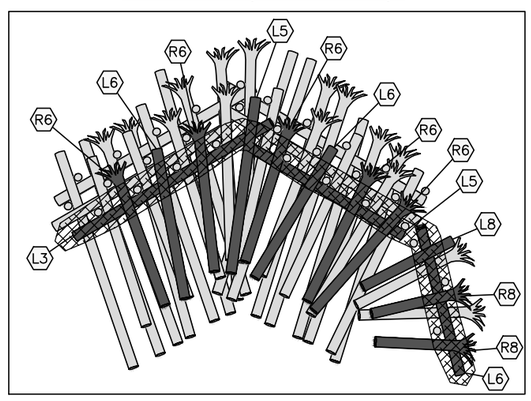

LAYER 4 (ELJ 6 & 8)

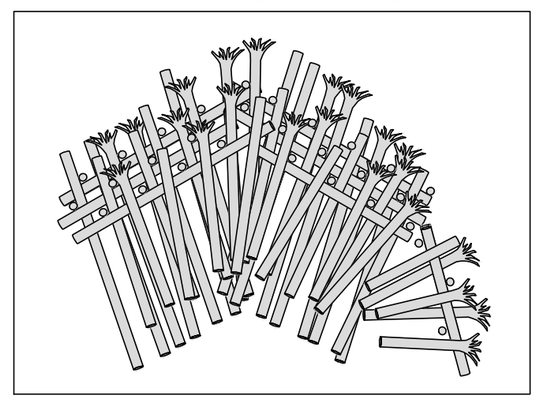

COMPLETE (ELJ 6 & 8)

NOTES:

1. STRUCTURE GENERAL LOCATION AND ORIENTATION SHALL BE STAKED BY THE CONTRACTOR. FINAL STRUCTURE LOCATION AND ORIENTATION TO BE FIELD VERIFIED BY THE PROJECT REPRESENTATIVE FOLLOWING CONTRACTOR STAKING.
2. ALL PILE LOCATIONS SHALL BE STAKED BY THE CONTRACTOR AND APPROVED BY THE PROJECT REPRESENTATIVE PRIOR TO PILE INSTALLATION.
3. ALL PILE LOCATIONS SHALL BE BASED ON THE LOCATION OF THE STRUCTURE CONTROL POINTS AND SHALL BE WITHIN 3" OF THE LOCATION SHOWN ON THE DRAWINGS.
4. LOG MATERIALS SHALL BE PLACED AT THE LOCATIONS AND ORIENTATIONS SPECIFIED ON THE DRAWINGS OR AS DIRECTED BY THE PROJECT REPRESENTATIVE. TRIM CUT ENDS OF HORIZONTAL KEY LOGS TO FIT AS REQUIRED.
5. PLACE SLASH OVER AND BETWEEN KEY LOGS AND PILES AS SHOWN FOR EACH LAYER FOLLOWING PLACEMENT OF KEY LOGS AND RACKING LOGS. PLACE APPROXIMATELY 2' TO 3' OF BACKFILL MATERIAL OVER THE INSIDE HALF OF THE WIDTH OF SLASH TO SECURE IN PLACE SUCH THAT SLASH IS VISIBLE FOLLOWING CONSTRUCTION. COORDINATE WITH THE PROJECT REPRESENTATIVE PRIOR TO PLACING RACKING AND SLASH.
6. SEE DWG SB6 FOR COORDINATES OF ELJ CONTROL POINTS.

LOG SCHEDULE:

LOG TYPE	MIN DIA (IN)	LENGTH (FT)	ROOTWAD	TOTAL QTY PER ELJ 5 & 7	TOTAL QTY PER ELJ 6 & 8
P2	18 (BUTT)	50	NO	27	27
P4	18 (BUTT)	25	NO	4	3
R2	24	50	YES	3	3
R3	24	45	YES	5	5
R4	24	40	YES	1	1
R5	24	35	YES	4	4
R6	24	30	YES	5	5
R7	24	25	YES	3	2
R8	24	20	YES	4	2
L2	24	50	NO	3	3
L3	24	45	NO	9	8
L4	24	40	NO	4	4
L5	24	35	NO	7	6
L6	24	30	NO	2	3
L7	24	25	NO	1	1
L8	24	20	NO	1	1
RACKING	6–16	15–30	OPTIONAL	200	200
SLASH				200 CY	200 CY

LEGEND:

- CURRENT LAYER KEY LOG
- PREVIOUS LAYER KEY LOG (AFTER BACKFILLING)
- VERTICAL PILE LOG
- SLASH PLACEMENT ZONE
- (L1) KEY LOG TYPE ID (LOG TYPE L1)
- [CP1] STRUCTURE CONTROL POINT (1)

15 0 15 30 45
SCALE IN FEET

FIELD BOOK:
SURVEYED:
SURVEY BASE MAP:
CHECKED:

NUM.	REVISION	BY	DATE

APPROVED:	IAN MOSTRENKO, PE	3–2016
PROJECT MANAGER:	MARK EWBANK, PE	3–2016
DESIGNED:	BRIAN SCOTT	3–2016
ECOLOGIST:	STEPHANIE SHELTON	3–2016
DESIGN ENTERED:	L. TURNIDGE, E. MARSHALL	3–2016

SRFB # RCO 087–1910C

PROJECT No. 1112049 (FL9001)

IAN B. MOSTRENKO, STATE OF WASHINGTON, 36069, REGISTERED PROFESSIONAL ENGINEER
03/23/16

HERRERA

King County
Department of Natural Resources and Parks
Water and Land Resources Division
River and Floodplain Management Section
Christie True, Director

COUNTYLINE LEVEE SETBACK

BANK DEFLECTOR ELJ LAYERING PLAN

SHEET 48 OF 58 SHEETS

WD6

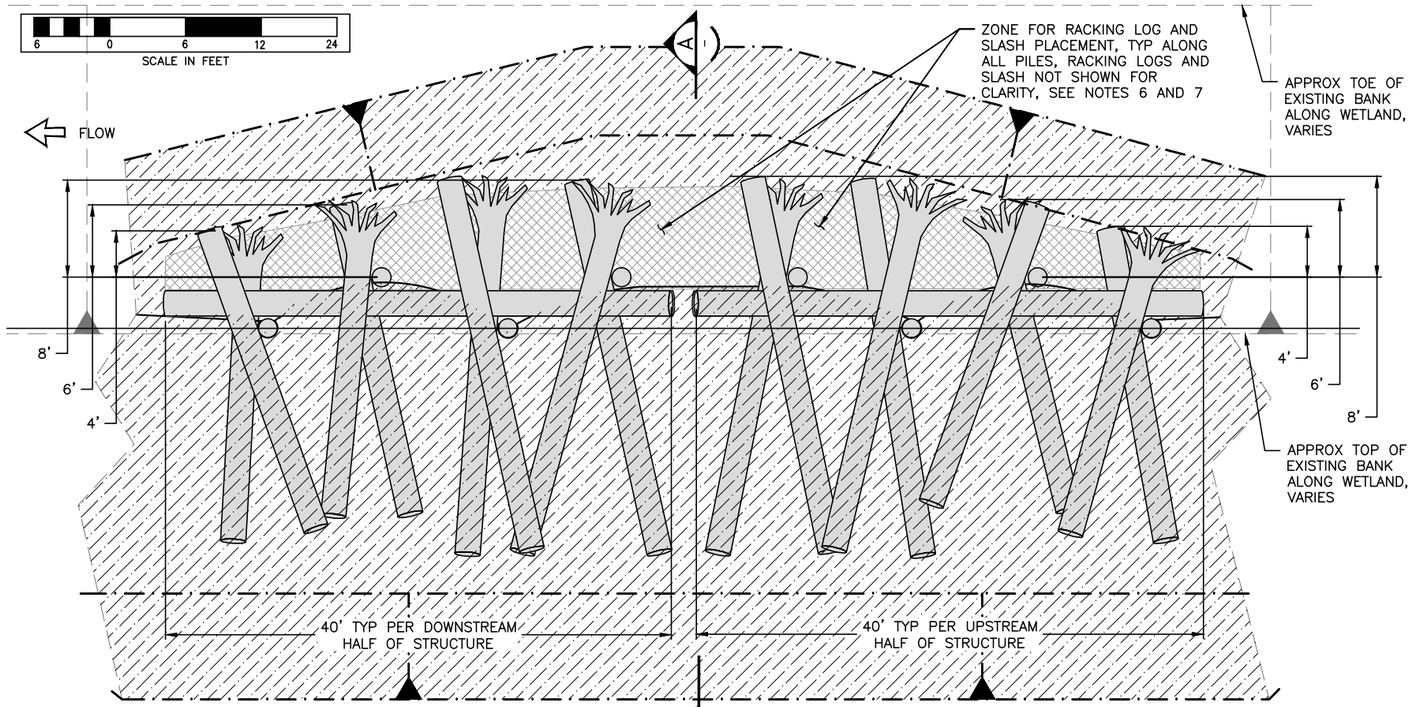

PLAN – BIOREVETMENT (1)

SB1, SB2, SB3, SB4, SB5

NOTES:

1. EXTENTS OF BACKFILL SHOWN ARE APPROXIMATE AND WILL VARY FOR EACH STRUCTURE.
2. EXCAVATION LIMITS SHOWN ARE APPROXIMATE AND WILL VARY BASED ON CONSTRUCTION MEANS AND METHODS, SUBSURFACE CONDITIONS AND LOCATION OF STRUCTURE. CONTRACTOR SHALL ADJUST EXCAVATION LIMITS AS NECESSARY TO COMPLETE CONSTRUCTION.
3. WHERE EXCAVATION WILL DAYLIGHT INTO OPEN WATER OR HIGHLY SATURATED SOIL, COMPLETE EXCAVATION IN SUCH A MANNER TO MINIMIZE WATER INTRUSION INTO THE EXCAVATION SO THAT MOST OF THE EXCAVATION SPOILS ARE KEPT DRY FOR REUSE AS BACKFILL MATERIAL.
4. BACKFILL EACH BIOREVETMENT STRUCTURE WITH THE MATERIAL SPECIFIED IN TABLE 2 WITHIN INTERIOR CORE OF STRUCTURE AND OVER FINAL LAYER OF LOGS AS SHOWN ON DWGS SD1–SD4 AND COMPACT AS DESCRIBED IN THE SPECIFICATIONS.
5. SEE LOG SCHEDULE ON DWG WD8 FOR DIMENSIONS AND NUMBERS OF EACH LOG TYPE IN STRUCTURE.
6. PLACEMENT OF RACKING LOGS SHOWN IS APPROXIMATE. PLACE RACKING LOGS ALONG UPSTREAM FACE OF STRUCTURE. APPROXIMATELY 1/2 OF RACKING LOGS SHALL BE PLACED ACROSS PILE ROWS (PERPENDICULAR TO FLOW) AND 1/2 OF THE RACKING LOGS PARALLEL TO FLOW AND EXTENDING INTO THE CORE OF THE STRUCTURE BETWEEN HORIZONTAL KEY LOGS. RACKING SHALL BE PLACED WITH EACH LAYER OF KEY LOGS, SHALL BE ANGLED UP AND DOWN FROM THE HORIZONTAL, AND SHALL BE PLACED TO CREATE AN INTERLOCKING MATRIX OF LOGS SECURED BETWEEN VERTICAL PILE LOGS AND HORIZONTAL KEY LOGS. COORDINATE WITH THE PROJECT REPRESENTATIVE PRIOR TO PLACING RACKING LOGS, SLASH AND BACKFILLING.
7. SEE STRUCTURE LAYERING PLAN ON DWG WD8 FOR SLASH PLACEMENT. SLASH NOT SHOWN HERE FOR CLARITY. PLACE SLASH AS SHOWN ON LAYERING PLAN TO FILL VOIDS BETWEEN RACKING LOGS.
8. SEE TABLE 1 FOR ELEVATIONS OF TOP AND BOTTOM OF BIOREVETMENT STRUCTURES.
9. SEE DWGS SD1–SD4 FOR BIOREVETMENT EXCAVATION LIMITS.

LEGEND:

- EXISTING GRADE
- PROPOSED GRADE
- EXCAVATION LIMITS
- SLASH PLACEMENT ZONE
- RACKING LOG PLACEMENT ZONE
- TOPSOIL
- BIOREVETMENT BACKFILL MATERIAL
- EXISTING SUBSTRATE
- PAY LIMIT FOR HAUL AND DISPOSE UNSUITABLE MATERIAL FOR BR1–16
- PAY LIMIT FOR HAUL AND DISPOSE UNSUITABLE MATERIAL FOR BR55–56, BR69–74, BR77–80, BR94–97, BR100
- PAY LIMIT FOR HAUL AND DISPOSE UNSUITABLE MATERIAL FOR BR17–54, BR57–68, BR75–76, BR81–93, BR98–99, BR101–108

TABLE 1. ELEVATION SCHEDULE FOR ALL 40' LONG BIOREVETMENT STRUCTURES:

STRUCTURE #	NO. OF STRUCTURES	BOTTOM OF STRUCTURE EL (FT)	MIN TOP OF STRUCTURE EL (FT)
BR1–BR38	38	63	73
BR39–BR50	12	64	74
BR51–BR56	6	65	75
BR57–BR60	4	66	76
BR61–BR65	5	67	77
BR66–BR74	9	68	78
BR75–BR81	7	69	79
BR82–BR108	27	70	80

TABLE 2. ESTIMATED CONSTRUCTION QUANTITIES FOR THE BIOREVETMENT STRUCTURES:

CONSTRUCTION ELEMENT	UNIT	QTY	STRUCTURE
EXCAVATION	CY	66,477	BR1–108
HAUL AND DISPOSE UNSUITABLE MATERIAL	CY	37,820	BR1–108
TOTAL BACKFILL	CY	69,996	BR1–108
FILL – NATIVE EXCAVATION SPOILS	CY	28,373	BR17–108
FILL – SELECT BORROW OR SELECT FILL TYPE 3 FOR BACKFILLING BIOREVETMENTS LOCATED WATERWARD OF EXISTING BANK	CY	9,151	BR21–22, BR32–34, BR39–41, BR51–52, BR57–58, BR61–63, BR75–76, BR82–83, BR90–93, BR98–99, BR101–108
FILL – SELECT BORROW OR SELECT FILL TYPE 3 FOR REPLACING UNSUITABLE BIOREVETMENT BACKFILL MATERAIL	CY	18,915	BR17–108
FILL – SELECT BORROW OR SELECT FILL TYPE 3 FOR BACKFILLING BIOREVETMENTS UNDER NEW SETBACK LEVEE	CY	3,790	BR1–16, BR55–56, BR69–74, BR77–80, BR94–97, BR100
FILL – LEVEE TOE ROCK FOR BACKFILLING BIOREVETMENTS UNDER NEW SETBACK LEVEE	CY	9,767	BR1–16, BR55–56, BR69–74, BR77–80, BR94–97, BR100

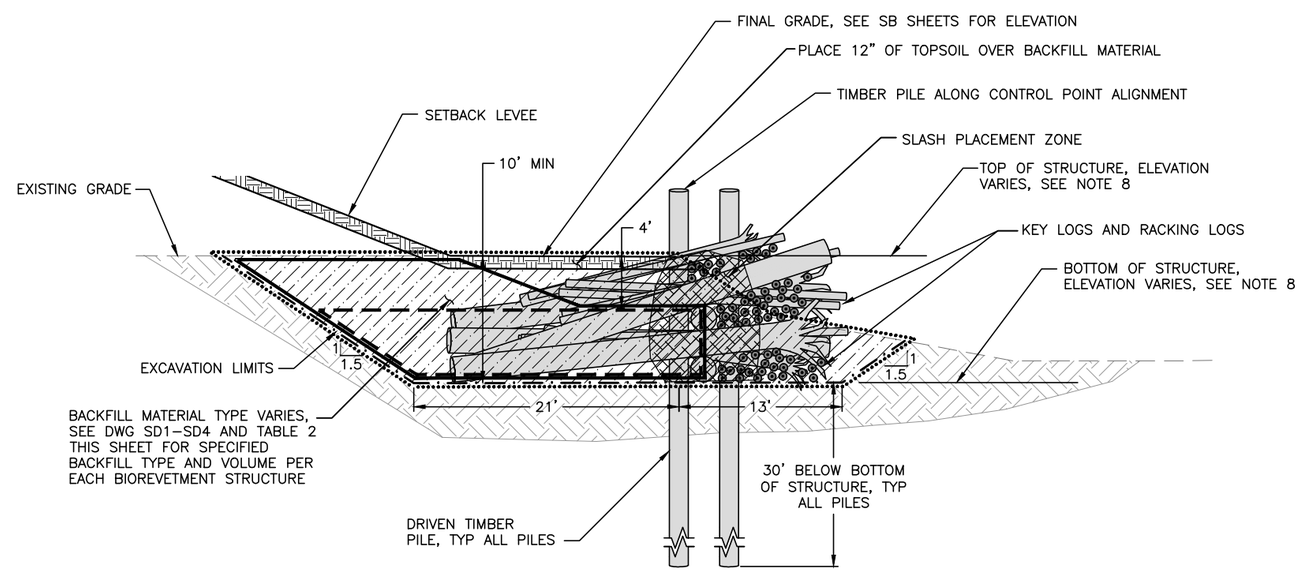

SECTION – BIOREVETMENT (A)

6 0 6 12 24
SCALE IN FEET

FIELD BOOK:
SURVEYED:
SURVEY BASE MAP:
CHECKED:

NUM.	REVISION	BY	DATE

APPROVED:	IAN MOSTRENKO, PE	3–2016
PROJECT MANAGER:	MARK EWBANK, PE	3–2016
DESIGNED:	BRIAN SCOTT	3–2016
ECOLOGIST:	STEPHANIE SHELTON	3–2016
DESIGN ENTERED:	L. TURNIDGE, E. MARSHALL	3–2016

SRFB # RCO 087–1910C

PROJECT No. 1112049 (FL9001)

IAN B. MOSTRENKO, STATE OF WASHINGTON, 36069, REGISTERED PROFESSIONAL ENGINEER
03/23/16

HERRERA

King County
Department of Natural Resources and Parks
Water and Land Resources Division
River and Floodplain Management Section
Christie True, Director

COUNTYLINE LEVEE SETBACK

BIOREVETMENT PLAN AND SECTION

SHEET 49 OF 58 SHEETS

WD7

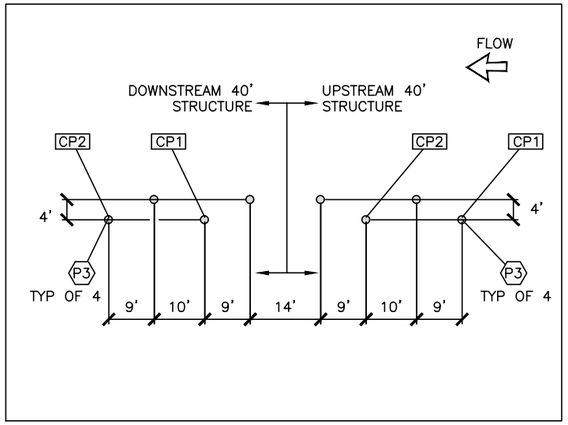

PILES

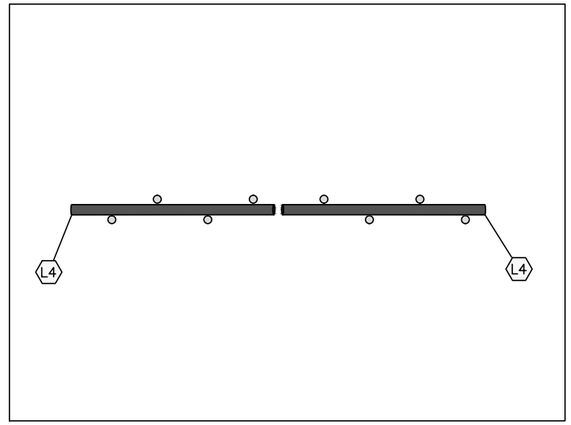

LAYER 1

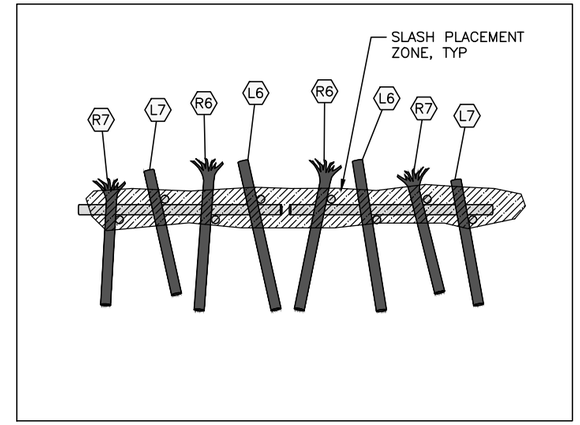

LAYER 2

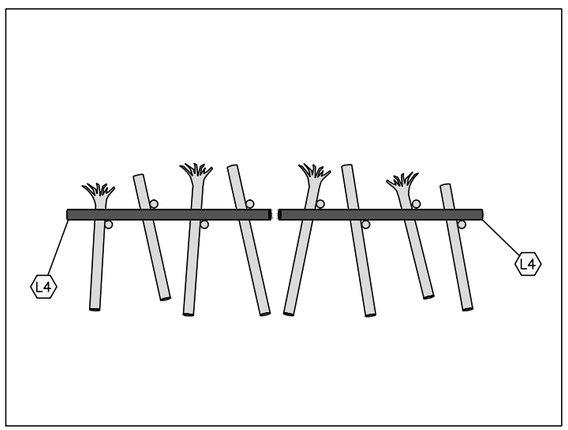

LAYER 3

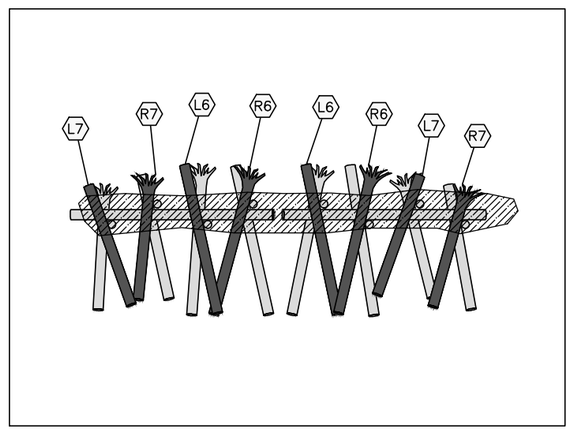

LAYER 4

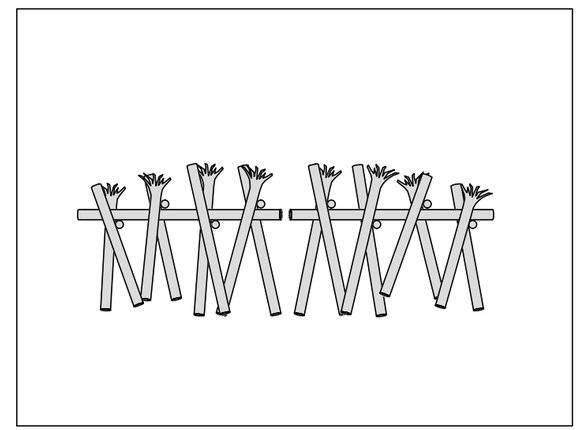

COMPLETE

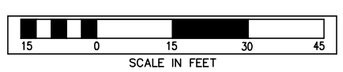

LOG SCHEDULE - PER 40' STRUCTURE

LOG TYPE	MIN DIA (IN)	LENGTH (FT)	ROOTWAD	TOTAL QTY PER ELJ
P3	18 (BUTT)	45	NO	4
R6	24	30	YES	2
R7	24	25	YES	2
L4	24	40	NO	2
L6	24	30	NO	2
L7	24	25	NO	2
RACKING	8–16	15–30	OPTIONAL	40
SLASH	–	–	–	40 CY

NOTES:

1. STRUCTURE GENERAL LOCATION AND ORIENTATION SHALL BE STAKED BY THE CONTRACTOR. FINAL STRUCTURE LOCATION AND ORIENTATION TO BE FIELD VERIFIED BY THE PROJECT REPRESENTATIVE FOLLOWING CONTRACTOR STAKING.
2. ALL PILE LOCATIONS SHALL BE STAKED BY THE CONTRACTOR AND APPROVED BY THE PROJECT REPRESENTATIVE PRIOR TO PILE INSTALLATION.
3. ALL PILE LOCATIONS SHALL BE BASED ON THE LOCATION OF THE STRUCTURE CONTROL POINTS AND SHALL BE WITHIN 3" OF THE LOCATION SHOWN ON THE DRAWINGS.
4. LOG MATERIALS SHALL BE PLACED AT THE LOCATIONS AND ORIENTATIONS SPECIFIED ON THE DRAWINGS OR AS DIRECTED BY THE PROJECT REPRESENTATIVE. TRIM CUT ENDS OF HORIZONTAL KEY LOGS TO FIT AS REQUIRED.
5. PLACE SLASH OVER AND BETWEEN KEY LOGS AND PILES AS SHOWN FOR EACH LAYER SPECIFIED FOLLOWING PLACEMENT OF KEY LOGS AND RACKING LOGS. PLACE APPROXIMATELY 2' TO 3' OF BACKFILL MATERIAL OVER THE INSIDE HALF OF THE WIDTH OF SLASH TO SECURE IN PLACE SUCH THAT SLASH IS VISIBLE FOLLOWING CONSTRUCTION. COORDINATE WITH THE PROJECT REPRESENTATIVE PRIOR TO PLACING RACKING AND SLASH.
6. SEE DWG WD9 FOR COORDINATES OF BIOREVETMENT CONTROL POINTS.

LEGEND:

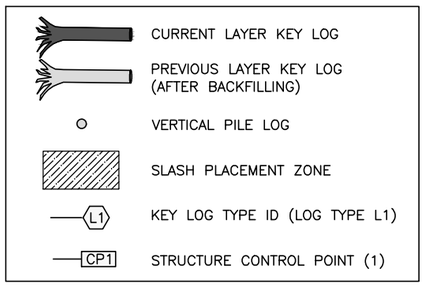

FIELD BOOK:
SURVEYED:
SURVEY BASE MAP:
CHECKED:

NUM.	REVISION	BY	DATE

APPROVED:	IAN MOSTRENKO, PE	3–2016
PROJECT MANAGER:	MARK EWBANK, PE	3–2016
DESIGNED:	BRIAN SCOTT	3–2016
ECOLOGIST:	STEPHANIE SHELTON	3–2016
DESIGN ENTERED:	L. TURNIDGE, E. MARSHALL	3–2016

SRFB # RCO 087–1910C

PROJECT No. 1112049 (FL9001)

IAN B. MOSTRENKO, STATE OF WASHINGTON, 36069, REGISTERED PROFESSIONAL ENGINEER
03/23/16

HERRERA

King County
Department of Natural Resources and Parks
Water and Land Resources Division
River and Floodplain Management Section
Christie True, Director

COUNTYLINE LEVEE SETBACK

BIOREVETMENT LAYERING PLAN

SHEET 50 OF 58 SHEETS

WD8

BIOREVETMENT CONTROL POINT TABLE:

ITEM	CP	NORTHING	EASTING
BR1	1	95382.20	1290474.14
	2	95363.94	1290468.91
BR2	1	95427.91	1290494.16
	2	95411.15	1290485.19
BR3	1	95455.23	1290511.02
	2	95439.29	1290500.68
BR4	1	95497.48	1290538.54
	2	95481.57	1290528.14
BR5	1	95521.59	1290558.90
	2	95507.71	1290545.92
BR6	1	95551.75	1290597.87
	2	95541.44	1290581.91
BR7	1	95578.51	1290614.96
	2	95561.03	1290607.54
BR8	1	95623.06	1290636.82
	2	95606.28	1290627.91
BR9	1	95633.59	1290738.24
	2	95635.84	1290719.37
BR10	1	95632.37	1290770.68
	2	95632.42	1290751.68
BR11	1	95648.69	1290818.02
	2	95639.19	1290801.57
BR12	1	95653.03	1290930.75
	2	95653.03	1290911.75
BR13	1	95664.94	1290960.81
	2	95655.44	1290944.35
BR14	1	95690.77	1291003.81
	2	95680.90	1290987.58
BR15	1	95682.28	1291113.08
	2	95689.88	1291095.67
BR16	1	95696.92	1291150.78
	2	95686.28	1291135.04
BR17	1	95718.94	1291175.27
	2	95705.61	1291161.72
BR18	1	95754.93	1291211.48
	2	95741.60	1291197.94
BR19	1	95778.01	1291234.64
	2	95764.69	1291221.09
BR20	1	95814.17	1291271.03
	2	95800.85	1291257.48
BR21	1	95880.65	1291281.21
	2	95871.39	1291264.62
BR22	1	95909.04	1291323.19
	2	95897.65	1291307.98
BR23	1	95938.57	1291337.42
	2	95920.25	1291332.37
BR24	1	95988.73	1291345.30
	2	95969.82	1291343.51
BR25	1	96021.52	1291349.72
	2	96002.73	1291346.93
BR26	1	96071.75	1291357.21
	2	96052.96	1291354.41
BR27	1	96103.88	1291361.93
	2	96085.08	1291359.14

ITEM	CP	NORTHING	EASTING
BR28	1	96154.12	1291369.32
	2	96135.33	1291366.52
BR29	1	96186.62	1291374.26
	2	96167.83	1291371.47
BR30	1	96236.87	1291381.65
	2	96218.08	1291378.85
BR31	1	96350.14	1291429.04
	2	96342.63	1291411.59
BR32	1	96400.26	1291461.38
	2	96386.87	1291447.90
BR33	1	96434.84	1291497.82
	2	96422.08	1291483.74
BR34	1	96448.77	1291525.70
	2	96442.34	1291507.82
BR35	1	96469.49	1291572.27
	2	96461.06	1291555.24
BR36	1	96493.56	1291594.72
	2	96478.00	1291583.82
BR37	1	96535.16	1291623.85
	2	96519.60	1291612.95
BR38	1	96570.96	1291645.38
	2	96554.50	1291635.88
BR39	1	96641.50	1291613.26
	2	96625.05	1291603.76
BR40	1	96685.83	1291638.40
	2	96669.37	1291628.90
BR41	1	96713.45	1291655.95
	2	96697.71	1291645.31
BR42	1	96730.61	1291697.47
	2	96729.18	1291678.52
BR43	1	96724.87	1291728.86
	2	96730.02	1291710.56
BR44	1	96711.71	1291777.55
	2	96716.72	1291759.22
BR45	1	96714.47	1291810.92
	2	96710.31	1291792.38
BR46	1	96725.59	1291860.48
	2	96721.43	1291841.94
BR47	1	96733.74	1291891.59
	2	96728.65	1291873.29
BR48	1	96747.36	1291940.52
	2	96742.27	1291922.21
BR49	1	96736.52	1291967.45
	2	96747.53	1291951.96
BR50	1	96707.40	1292008.62
	2	96718.30	1291993.05
BR51	1	96747.69	1292089.61
	2	96763.40	1292078.91
BR52	1	96707.72	1292121.40
	2	96722.22	1292109.13
BR53	1	96696.06	1292151.65
	2	96699.03	1292132.89
BR54	1	96706.99	1292200.93
	2	96699.28	1292183.56

ITEM	CP	NORTHING	EASTING
BR55	1	96720.67	1292230.28
	2	96712.67	1292213.05
BR56	1	96742.17	1292276.37
	2	96734.17	1292259.14
BR57	1	96856.05	1292279.15
	2	96847.73	1292262.06
BR58	1	96877.90	1292303.97
	2	96864.05	1292290.96
BR59	1	96921.74	1292329.34
	2	96904.31	1292321.77
BR60	1	96952.48	1292355.54
	2	96938.82	1292342.33
BR61	1	97054.73	1292346.93
	2	97043.57	1292331.55
BR62	1	97086.66	1292386.29
	2	97074.28	1292371.88
BR63	1	97112.17	1292407.10
	2	97096.69	1292396.09
BR64	1	97157.84	1292429.09
	2	97140.02	1292422.52
BR65	1	97189.17	1292438.48
	2	97170.85	1292433.44
BR66	1	97236.73	1292454.78
	2	97218.97	1292448.02
BR67	1	97264.60	1292470.38
	2	97248.52	1292460.25
BR68	1	97306.78	1292497.88
	2	97290.92	1292487.42
BR69	1	97328.61	1292521.48
	2	97317.08	1292506.38
BR70	1	97358.91	1292561.63
	2	97347.51	1292546.43
BR71	1	97379.14	1292587.43
	2	97367.19	1292572.67
BR72	1	97410.84	1292626.39
	2	97398.88	1292611.62
BR73	1	97431.06	1292651.26
	2	97419.10	1292636.50
BR74	1	97462.82	1292690.15
	2	97450.86	1292675.39
BR75	1	97557.50	1292720.40
	2	97549.08	1292703.37
BR76	1	97577.73	1292745.60
	2	97564.83	1292731.65
BR77	1	97623.99	1292761.97
	2	97605.08	1292760.15
BR78	1	97656.19	1292767.84
	2	97637.67	1292763.60
BR79	1	97706.61	1292776.75
	2	97687.80	1292774.08
BR80	1	97739.08	1292777.95
	2	97720.08	1292777.98
BR81	1	97789.72	1292778.06
	2	97770.72	1292778.09

ITEM	CP	NORTHING	EASTING
BR82	1	97880.11	1292712.19
	2	97865.54	1292699.99
BR83	1	97891.44	1292740.37
	2	97887.83	1292721.72
BR84	1	97904.85	1292789.21
	2	97899.05	1292771.12
BR85	1	97923.87	1292815.24
	2	97911.15	1292801.12
BR86	1	97957.86	1292852.97
	2	97945.14	1292838.85
BR87	1	97975.04	1292880.28
	2	97965.96	1292863.58
BR88	1	97995.53	1292926.31
	2	97988.46	1292908.67
BR89	1	98007.09	1292965.65
	2	98002.18	1292947.29
BR90	1	98094.62	1292976.17
	2	98099.88	1292957.92
BR91	1	98090.87	1293008.69
	2	98091.79	1292989.71
BR92	1	98091.30	1293059.33
	2	98090.52	1293040.35
BR93	1	98096.00	1293091.63
	2	98092.54	1293072.95
BR94	1	98119.67	1293135.96
	2	98108.09	1293120.90
BR95	1	98140.63	1293161.44
	2	98128.41	1293146.89
BR96	1	98172.98	1293199.96
	2	98160.76	1293185.42
BR97	1	98199.51	1293231.42
	2	98187.29	1293216.87
BR98	1	98282.83	1293172.40
	2	98266.89	1293162.06
BR99	1	98299.75	1293198.23
	2	98291.72	1293181.01
BR100	1	98340.33	1293225.47
	2	98322.18	1293219.84
BR101	1	98426.09	1293156.09
	2	98407.10	1293156.59
BR102	1	98473.65	1293167.95
	2	98456.08	1293160.73
BR103	1	98503.27	1293180.54
	2	98485.78	1293173.11
BR104	1	98549.42	1293200.73
	2	98532.04	1293193.03
BR105	1	98579.19	1293213.40
	2	98561.62	1293206.16
BR106	1	98622.70	1293238.09
	2	98606.89	1293227.56
BR107	1	98647.26	1293259.17
	2	98633.27	1293246.31
BR108	1	98676.77	1293299.14
	2	98667.00	1293282.85

NOTES:

1. SEE DWG WD8 FOR LOCATION OF CONTROL POINTS FOR EACH 40' LONG BIOREVETMENT STRUCTURE.

FIELD BOOK:
SURVEYED:
SURVEY BASE MAP:
CHECKED:

NUM.	REVISION	BY	DATE

APPROVED:	IAN MOSTRENKO, PE	3-2016
PROJECT MANAGER:	MARK EWBANK, PE	3-2016
DESIGNED:	BRIAN SCOTT	3-2016
ECOLOGIST:	STEPHANIE SHELTON	3-2016
DESIGN ENTERED:	L. TURNIDGE, E. MARSHALL	3-2016

SRFB # RCO 087-1910C

PROJECT No. 1112049 (FL9001)

IAN B. MOSTRENKO STATE OF WASHINGTON 36069 REGISTERED PROFESSIONAL ENGINEER
03/23/16

HERRERA

King County
Department of Natural Resources and Parks
Water and Land Resources Division
River and Floodplain Management Section
Christie True, Director

COUNTYLINE LEVEE SETBACK

BIOREVETMENT CONTROL POINT TABLE

SHEET 51 OF 58 SHEETS

WD9

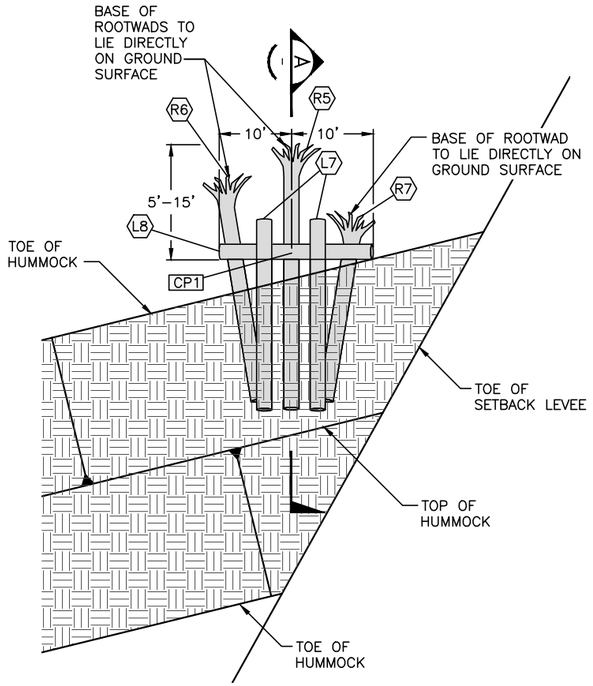

TYPE 1 ROUGHENING PLAN (1) SB2, SB3, SB4

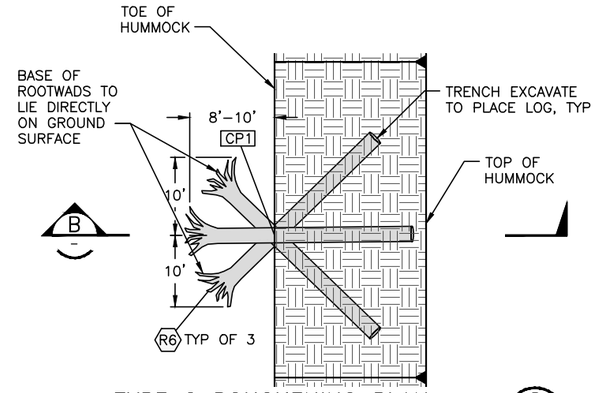

TYPE 2 ROUGHENING PLAN (2) SB2, SB3

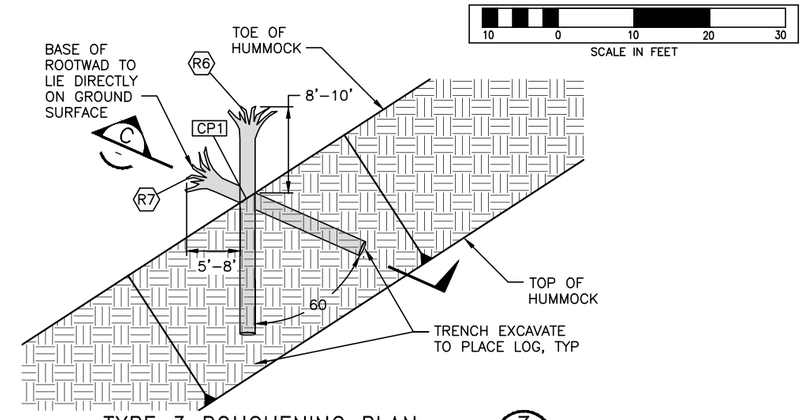

TYPE 3 ROUGHENING PLAN (3) SB3, SB4

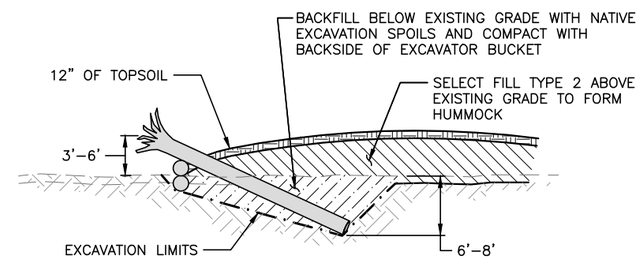

TYPE 2 ROUGHENING SECTION (B)

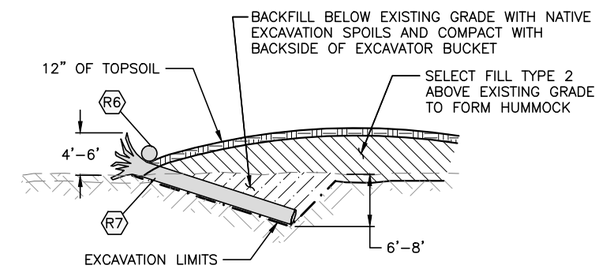

TYPE 3 ROUGHENING SECTION (C)

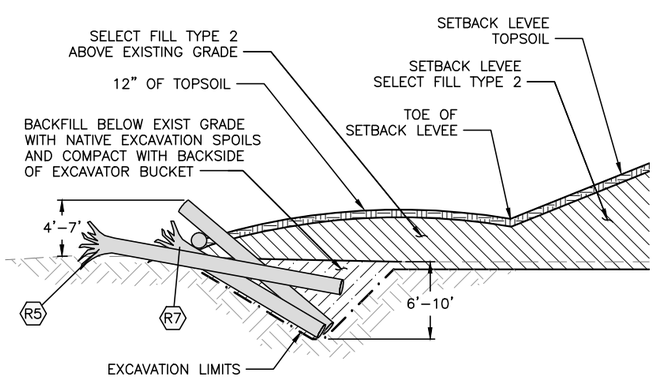

TYPE 1 ROUGHENING SECTION (A)

LEGEND:

	EXISTING GRADE		TOPSOIL (FOR HUMMOCK)
	PROPOSED GRADE		EXCAVATION SPOILS
	EXCAVATION LIMITS		SELECT FILL TYPE 2
L1	KEY LOG TYPE ID (LOG TYPE L1)		EXISTING SUBSTRATE
CP1	STRUCTURE CONTROL POINT (1)		

NOTES:

1. EXTENTS OF BACKFILL SHOWN ARE APPROXIMATE AND WILL VARY FOR EACH LOG STRUCTURE.
2. EXCAVATION LIMITS SHOWN ARE APPROXIMATE AND WILL VARY BASED ON CONSTRUCTION MEANS AND METHODS, SUBSURFACE CONDITIONS AND LOCATION OF STRUCTURE. CONTRACTOR SHALL ADJUST EXCAVATION LIMITS AS NECESSARY TO COMPLETE CONSTRUCTION.
3. SEE LOG SCHEDULE FOR DIMENSIONS AND NUMBERS OF EACH LOG TYPE IN STRUCTURE.
4. SEE DWG SB6 FOR COORDINATES OF TYPE 1, 2, AND 3 ROUGHENING CONTROL POINTS.

ROUGHENING - TYPE 1 LOG SCHEDULE

LOG TYPE	MIN DIA (IN)	LENGTH (FT)	ROOTWAD	TOTAL QTY PER ELJ
R5	24	35	Y	1
R6	24	30	Y	1
R7	24	25	Y	1
L7	24	25	N	2
L8	24	20	N	1

ROUGHENING - TYPE 2 LOG SCHEDULE

LOG TYPE	MIN DIA (IN)	LENGTH (FT)	ROOTWAD	TOTAL QTY PER ELJ
R6	24	30	Y	3

ROUGHENING - TYPE 3 LOG SCHEDULE

LOG TYPE	MIN DIA (IN)	LENGTH (FT)	ROOTWAD	TOTAL QTY PER ELJ
R6	24	30	Y	1
R7	24	25	Y	1

FIELD BOOK:
SURVEYED:
SURVEY BASE MAP:
CHECKED:

NUM.	REVISION	BY	DATE

APPROVED:	IAN MOSTRENKO, PE	3–2016
PROJECT MANAGER:	MARK EWBANK, PE	3–2016
DESIGNED:	BRIAN SCOTT	3–2016
ECOLOGIST:	STEPHANIE SHELTON	3–2016
DESIGN ENTERED:	L. TURNIDGE, E. MARSHALL	3–2016

SRFB # RCO 087–1910C

PROJECT No. 1112049 (FL9001)

IAN R. MOSTRENKO, STATE OF WASHINGTON, 36069, REGISTERED PROFESSIONAL ENGINEER
03/23/16

HERRERA

King County
Department of Natural Resources and Parks
Water and Land Resources Division
River and Floodplain Management Section
Christie True, Director

COUNTYLINE LEVEE SETBACK

FLOODPLAIN ROUGHENING AND HUMMOCK DETAILS

SHEET 52 OF 58 SHEETS

WD10

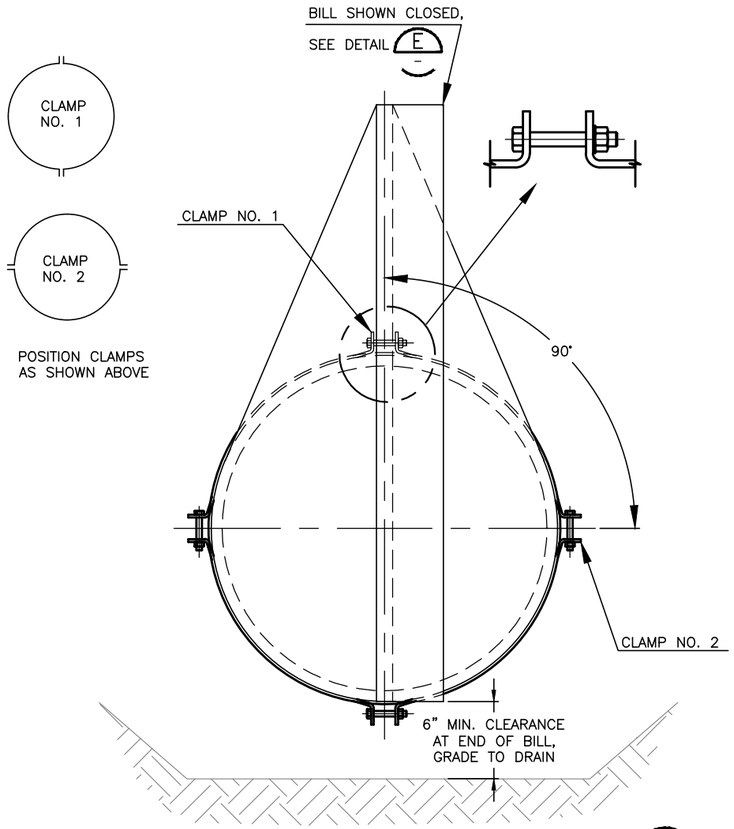

SECTION C–C (C)
NTS

NOTES:

1. HANDLE AND INSTALL CHECK VALVE IN ACCORDANCE WITH MANUFACTURER'S INSTRUCTIONS AND APPROVED CONTRACTOR'S SUBMITTAL.
2. POSITION CLAMPS AT 90° AS SHOWN AND INSTALL BOLTS.
3. PROVIDE 6" MIN. VERTICAL CLEARANCE BENEATH BILL AND GRADE EXISTING GROUND TO DRAIN AWAY FROM BILL.
4. RESTORE WORK AREA TO PREVIOUS CONDITION.
5. EXIST 24" RCP TO BE EXTENDED BY OTHERS TO THE EXTENT SHOWN.

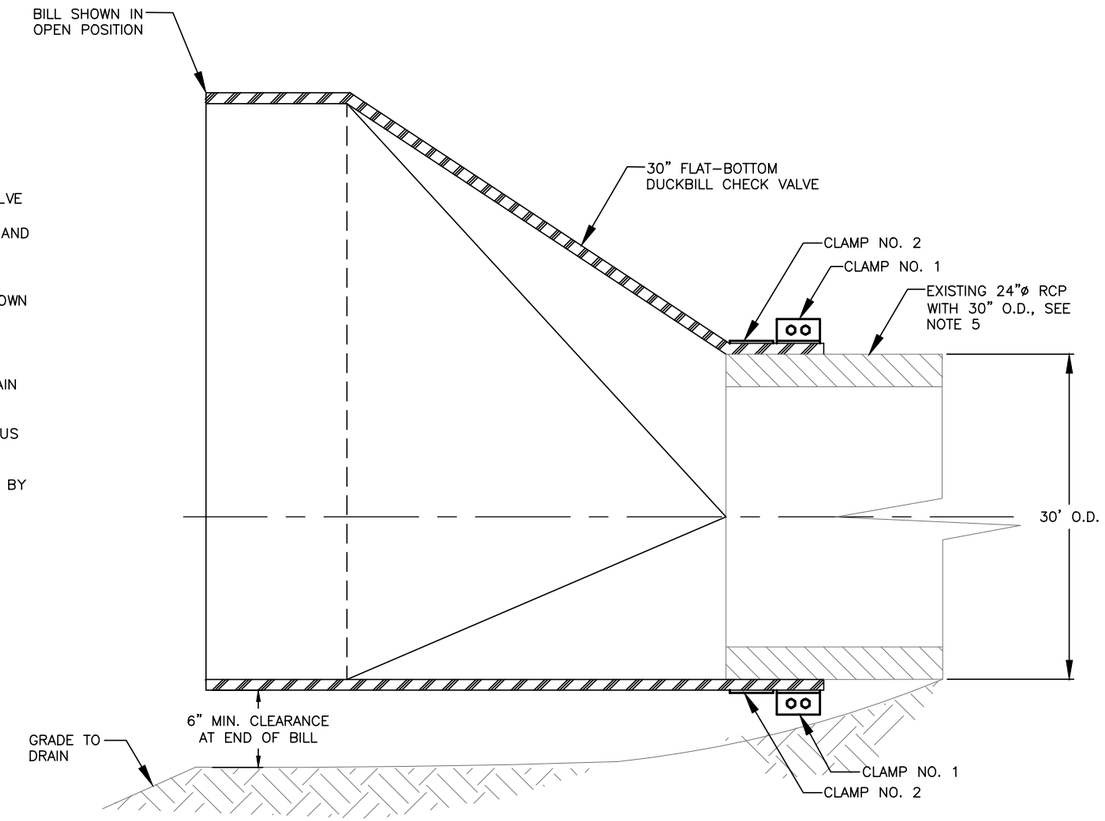

SECTION D–D (D)
NTS

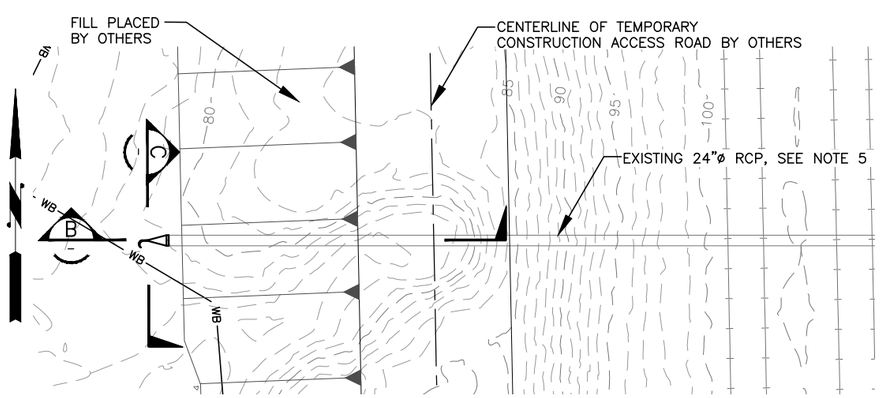

PLAN (A)
SCALE" 1"=10'

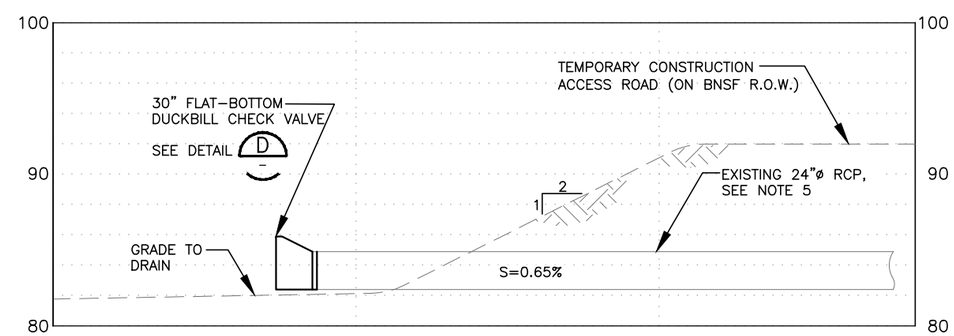

SECTION B–B (B)
SCALE: 1"=5'

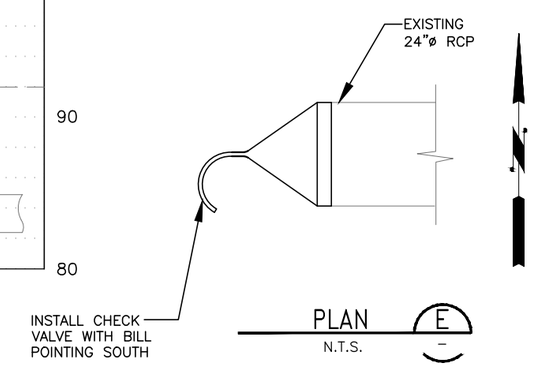

PLAN (E)
N.T.S.

FIELD BOOK:		NUM.	REVISION	BY	DATE
SURVEYED:					
SURVEY BASE MAP:					
CHECKED:					

APPROVED:	JEANNE STYPULA, PE	3–2016
PROJECT MANAGER:	CHRIS BRUMMER, PE	3–2016
DESIGNED:	CHRIS BRUMMER, PE	3–2016
ECOLOGIST:	STEPHANIE SHELTON	3–2016
DESIGN ENTERED:	L. TURNIDGE, E. MARSHALL	3–2016

SRFB # RCO 087–1910C

PROJECT No. 1112049 (FL9001)

CHRISTOPHER JON BRUMMER, STATE OF WASHINGTON, 40695, REGISTERED PROFESSIONAL ENGINEER
3/23/16

King County
Department of Natural Resources and Parks
Water and Land Resources Division
River and Floodplain Management Section
Christie True, Director

COUNTYLINE LEVEE SETBACK

CHECK VALVE DETAILS

SHEET 53 OF 58 SHEETS

CV1

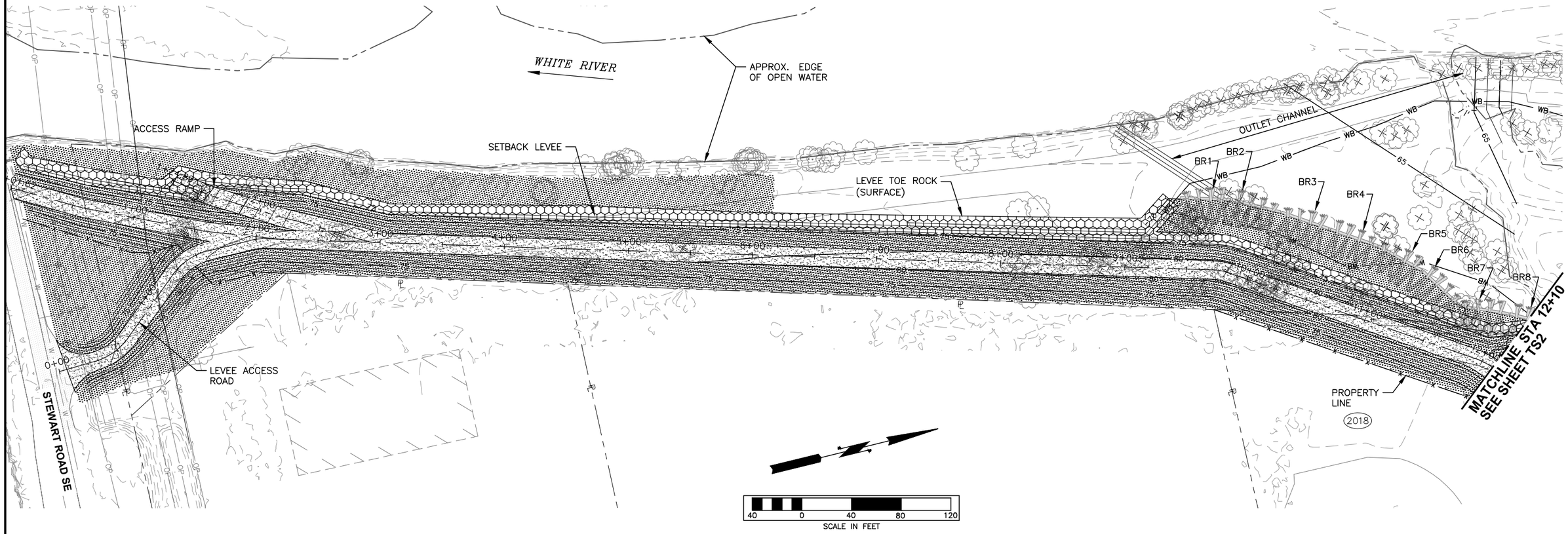

NOTES:

1. ALL TOPSOIL AREAS SHALL ALSO RECEIVE 3" WOOD MULCH.
2. TOPSOIL AREAS DESIGNATED FOR FUTURE PLANTING BY OTHERS.
3. DECOMPACT ALL AREAS RECEIVING TOPSOIL PLACEMENT IN ACCORDANCE WITH SECTION 31 23 00.

LEGEND:

- 12" TOPSOIL
- 18" TOPSOIL
- LEVEE TOE ROCK (SURFACE)

FIELD BOOK:
SURVEYED:
SURVEY BASE MAP:
CHECKED:

NUM.	REVISION	BY	DATE

APPROVED:	JEANNE STYPULA, PE	3-2016
PROJECT MANAGER:	CHRIS BRUMMER, PE	3-2016
DESIGNED:	CHRIS BRUMMER, PE	3-2016
ECOLOGIST:	STEPHANIE SHELTON	3-2016
DESIGN ENTERED:	HUE ONG	3-2016

SRFB # RCO 087-1910C

PROJECT No. 1112049 (FL9001)

CHRISTOPHER JON BRUMMER, STATE OF WASHINGTON, 40595, REGISTERED PROFESSIONAL ENGINEER
3/23/16

King County
Department of Natural Resources and Parks
Water and Land Resources Division
River and Floodplain Management Section
Christie True, Director

COUNTYLINE LEVEE SETBACK

TOPSOIL AND LEVEE TOE ROCK SURFACING

SHEET 54 OF 58 SHEETS

TS1

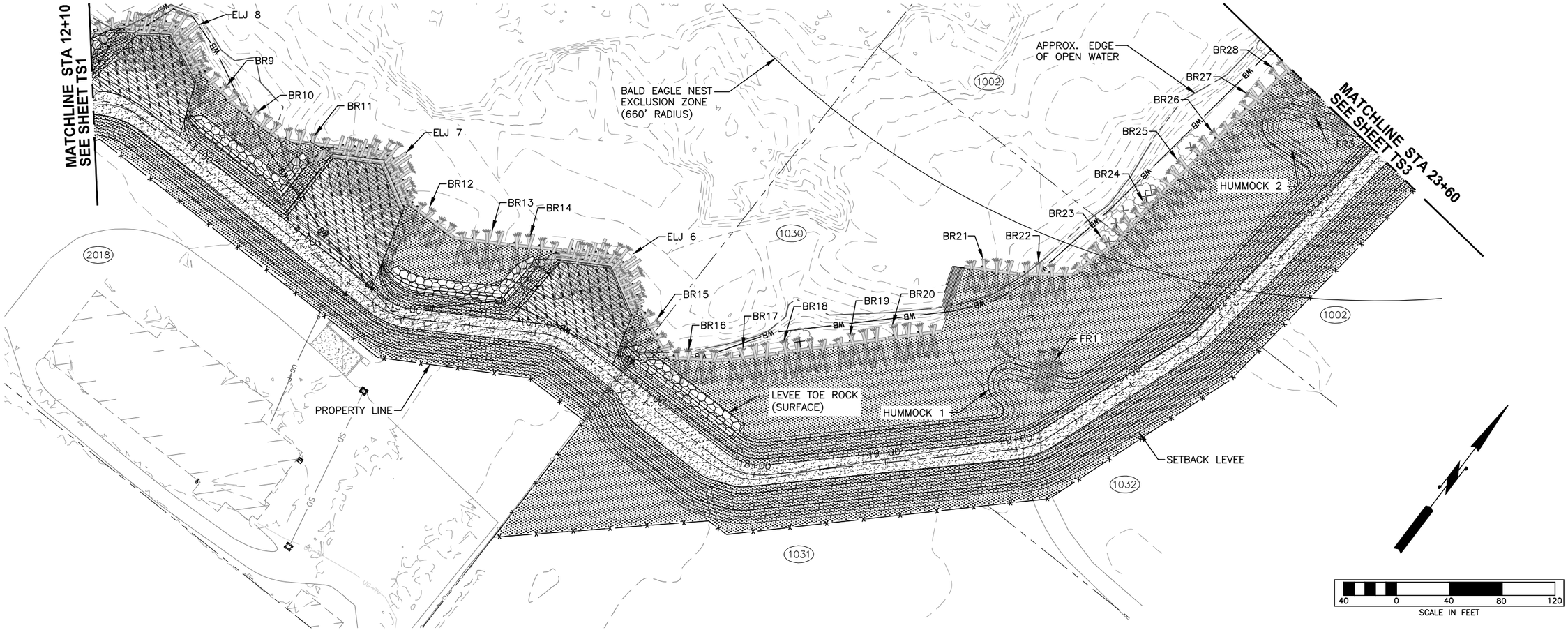

NOTES:

1. ALL TOPSOIL AREAS SHALL ALSO RECEIVE 3" WOOD MULCH.
2. TOPSOIL AREAS DESIGNATED FOR FUTURE PLANTING BY OTHERS.
3. DECOMPACT ALL AREAS RECEIVING TOPSOIL PLACEMENT IN ACCORDANCE WITH SECTION 31 23 00.

LEGEND:

- 12" TOPSOIL
- 18" TOPSOIL
- LEVEE TOE ROCK (SURFACE)

FIELD BOOK:	NUM.	REVISION	BY	DATE	APPROVED: JEANNE STYPULA, PE	3-2016	SRFB # RCO 087-1910C
SURVEYED:					PROJECT MANAGER: CHRIS BRUMMER, PE	3-2016	PROJECT No. 1112049 (FL9001)
SURVEY BASE MAP:					DESIGNED: CHRIS BRUMMER, PE	3-2016	
CHECKED:					ECOLOGIST: STEPHANIE SHELTON	3-2016	
					DESIGN ENTERED: HUE ONG	3-2016	

CHRISTOPHER JON BRUMMER
STATE OF WASHINGTON
40695
REGISTERED
PROFESSIONAL ENGINEER
3/23/16

King County
Department of Natural Resources and Parks
Water and Land Resources Division
River and Floodplain Management Section
Christie True, Director

COUNTYLINE LEVEE SETBACK

TOPSOIL AND LEVEE TOE ROCK SURFACING

SHEET 55 OF 58 SHEETS

TS2

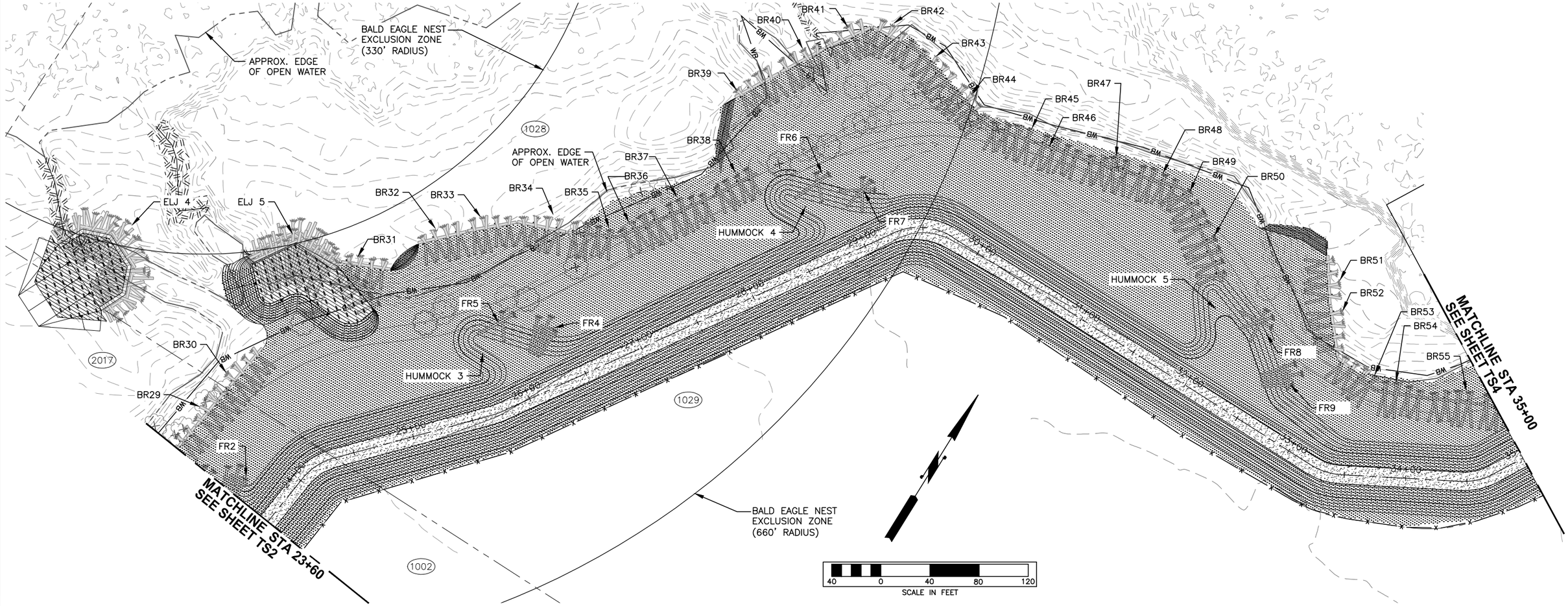

NOTES:

1. ALL TOPSOIL AREAS SHALL ALSO RECEIVE 3" WOOD MULCH.
2. TOPSOIL AREAS DESIGNATED FOR FUTURE PLANTING BY OTHERS.
3. DECOMPACT ALL AREAS RECEIVING TOPSOIL PLACEMENT IN ACCORDANCE WITH SECTION 31 23 00.

LEGEND:

12" TOPSOIL

18" TOPSOIL

FIELD BOOK:
SURVEYED:
SURVEY BASE MAP:
CHECKED:

NUM.	REVISION	BY	DATE

APPROVED:	JEANNE STYPULA, PE	3-2016
PROJECT MANAGER:	CHRIS BRUMMER, PE	3-2016
DESIGNED:	CHRIS BRUMMER, PE	3-2016
ECOLOGIST:	STEPHANIE SHELTON	3-2016
DESIGN ENTERED:	HUE ONG	3-2016

SRFB # RCO 087-1910C

PROJECT No. 1112049 (FL9001)

CHRISTOPHER JON BRUMMER STATE OF WASHINGTON 40995 REGISTERED PROFESSIONAL ENGINEER
3/23/16

King County
Department of Natural Resources and Parks
Water and Land Resources Division
River and Floodplain Management Section
Christie True, Director

COUNTYLINE LEVEE SETBACK

TOPSOIL AND LEVEE TOE ROCK SURFACING

SHEET 56 OF 58 SHEETS

TS3

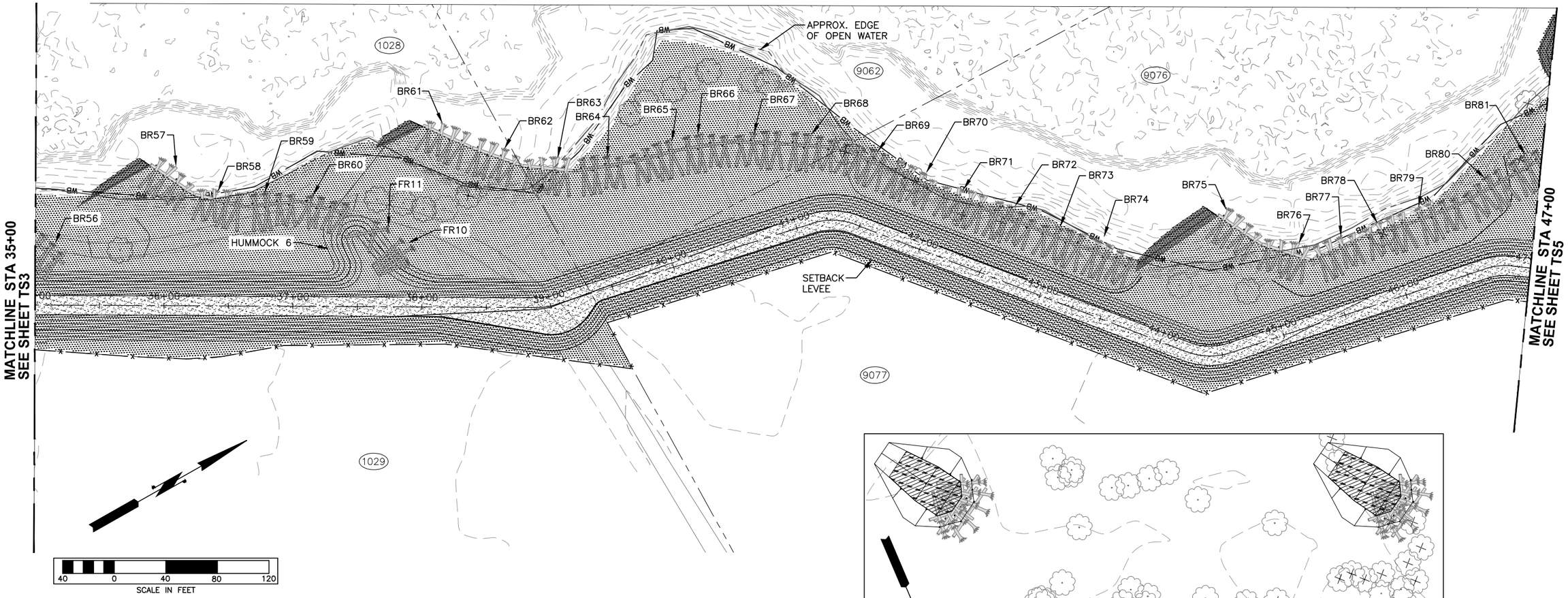

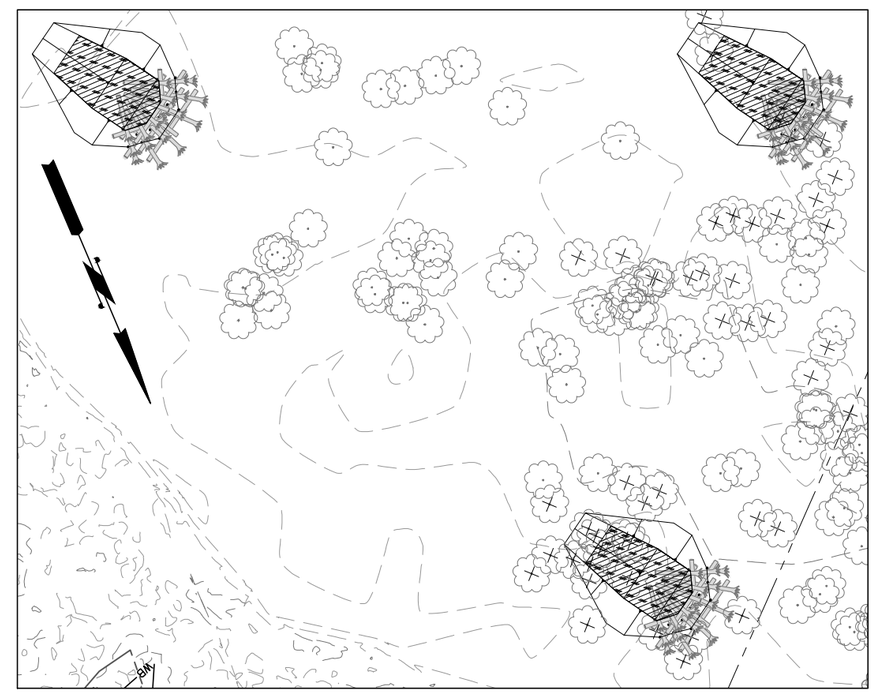

SMALL APEX ELJ TOPSOIL PLACEMENT (1)

SCALE: 1"=40'

NOTES:

1. ALL TOPSOIL AREAS SHALL ALSO RECEIVE 3" WOOD MULCH.
2. TOPSOIL AREAS DESIGNATED FOR FUTURE PLANTING BY OTHERS.
3. DECOMPACT ALL AREAS RECEIVING TOPSOIL PLACEMENT IN ACCORDANCE WITH SECTION 31 23 00.

LEGEND:

12" TOPSOIL

18" TOPSOIL

FIELD BOOK:	NUM.	REVISION	BY	DATE	
SURVEYED:					
SURVEY BASE MAP:					
CHECKED:					

APPROVED: JEANNE STYPULA, PE 3-2016
PROJECT MANAGER: CHRIS BRUMMER, PE 3-2016
DESIGNED: CHRIS BRUMMER, PE 3-2016
ECOLOGIST: STEPHANIE SHELTON 3-2016
DESIGN ENTERED: HUE ONG 3-2016

SRFB # RCO 087-1910C

PROJECT No. 1112049 (FL9001)

CHRISTOPHER JON BRUMMER
STATE OF WASHINGTON
40695
REGISTERED PROFESSIONAL ENGINEER
3/23/16

King County
Department of Natural Resources and Parks
Water and Land Resources Division
River and Floodplain Management Section
Christie True, Director

COUNTYLINE LEVEE SETBACK

TOPSOIL AND LEVEE TOE ROCK SURFACING

SHEET 57 OF 58 SHEETS

TS4

NOTES:

1. ALL TOPSOIL AREAS SHALL ALSO RECEIVE 3" WOOD MULCH.
2. TOPSOIL AREAS DESIGNATED FOR FUTURE PLANTING BY OTHERS.
3. DECOMPACT ALL AREAS RECEIVING TOPSOIL PLACEMENT IN ACCORDANCE WITH SECTION 31 23 00.

LEGEND:

12" TOPSOIL

18" TOPSOIL

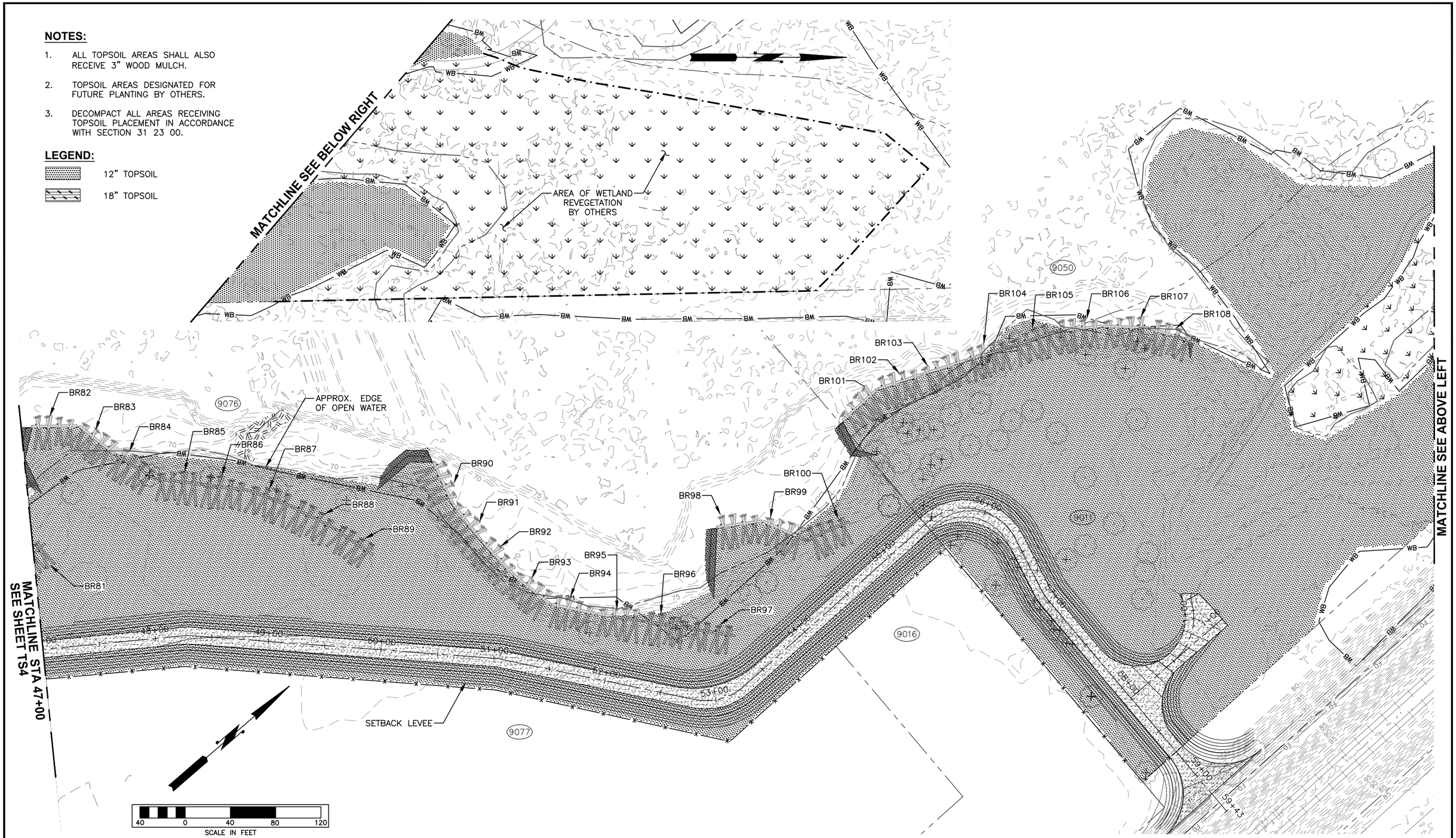

FIELD BOOK:					
SURVEYED:					
SURVEY BASE MAP:					
CHECKED:					
		NUM.	REVISION	BY	DATE

APPROVED: JEANNE STYPULA, PE	3-2016
PROJECT MANAGER: CHRIS BRUMMER, PE	3-2016
DESIGNED: CHRIS BRUMMER, PE	3-2016
ECOLOGIST: STEPHANIE SHELTON	3-2016
DESIGN ENTERED: HUE ONG	3-2016

SRFB # RCO 087-1910C

PROJECT No. 1112049 (FL9001)

CHRISTOPHER JON BRUMMER — STATE OF WASHINGTON — 40695 — REGISTERED PROFESSIONAL ENGINEER

3/23/16

King County
Department of Natural Resources and Parks
Water and Land Resources Division
River and Floodplain Management Section

Christie True, Director

COUNTYLINE LEVEE SETBACK

TOPSOIL AND LEVEE TOE ROCK SURFACING

SHEET 58 OF 58 SHEETS

TS5