King County CSO
5-Year Update

Task 4.0

Development of Alternatives

Brown & Caldwell, K C M,
Herrera Environmental Consultants and Associated Firms

December 1997

CONTENTS

Executive Summary vii
Alternatives Development vii
Basis of Sizing and Cost Estimating viii
CSO Control Project Impacts ix
Other Issues x
Introduction 1
RWSP Cross Reference 3
Hydraulic Analysis 5
King County Hydraulic Model 5
West Point Peak Flow Set Point 5
State of Washington CSO Control Regulation Projects 6
Federal CSO Policy Control Projects 6
Onsite CSO Treatment 9
Cost Development 13
Component Cost Estimating 13
Partial Separation Cost Estimates 14
CSO Control Elements: Implementation and Impact 17
Alternatives Development 19
Duwamish CSO Control Alternatives 21
Storage in the Duwamish 21
Separation and Storage in the Duwamish Area 26
Onsite CSO Treatment 27
Local Onsite CSO Treatment Siting Issues 29
Flow Transfer to EDRP at Renton (Southern Transfer) 29
Denny/Lake Union CSO Control Alternatives 31
Centralized Duwamish Area CSO Treatment 33
Assumptions 33
West Seattle and Alki CSOs 33
CSO Treatment Facilities 33
Effluent Disposal 35
CATAD Operations 35
CSO Treatment in Conjunction with Secondary Treatment (Task 5 Group 3b) 35
CSO Treatment Only at Duwamish (Task 5 Group 3c) 37
Southern Service Area Deep Tunnel Storage Alternatives 41

South Magnolia CSO Control Alternatives 43
Storage Alternative 43
Rooftop Separation Alternative 43
North Interceptor Basin 47
Deep Tunnel Storage for University, Montlake and 3rd Avenue West 47
Storage Tank Alternatives 51
University and Montlake 51
3rd Avenue West 57
11th Avenue NW 58
Ballard Regulator 59
North Interceptor CSO Treatment Alternatives 60
Partial Separation Alternatives 61
University/Montlake 61
Ballard and 11th Avenue NW (Ballard Basin) 62
Alki Basin 65
Partial Separation 65
Offline Storage 65
Offline Storage with Pump Station 66
Parallel Conveyance System 66
Building Sewer Rehabilitation and Roof Drainage Separation 68
West Seattle Basin 69
Harbor Regulator CSO Control Alternatives 69
Conveyance/Storage Alternative 69
Separation 69
Chelan Regulator CSO Control Alternatives 71
Storage in Conjunction with Alki Tunnel 71
Storage in Separate Tank 71
Refinements 73
8th Avenue South Regulator CSO Control Alternative 73
West Michigan Regulator 75
Terminal 115 75
Norfolk Basin 81
Martin Luther King Way Overflow 82
Storage Alternative 82
Separation Alternative 82
South Henderson Street Pump Station CSO Control Alternatives 82
Storage Alternative 84
Weir Adjustment Alternative 84
Separation Alternative 84
Norfolk Regulator CSO Control Alternative 84
Norfolk Project Combinations and Cost Estimates 86

North Beach Pump Station....89

CSO Control Impact at West Point and West Point Enhancements....91

Additional Issues and Projects....93

Ongoing Costs Associated with Sewer Separation Projects....93
Impact of Garbage Grinders on CSO Projects....93
Roof Drain Disconnection....93
East Bay Municipal Utilities District (EBMUD), California....94
Nashville, Tennessee....95
Vallejo, California....95
North Tahoe Public Utility District, California....95
Tacoma, Washington....96
Portland, Oregon....96
Scarborough, Ontario, Canada....96
Macomb County, Michigan....97
Modifications in Street Cleaning Practices....97
West Point Bypass as a CSO Discharge Location....98
West Point Secondary Clarifiers used for CSO Treatment....99
Seasonal Discharge to the Duwamish River....100
New Technologies....101
Vortex Separators....102
Microsep or Actiflo....102
Fine Screens....102
Direct Filtration....103
Dissolved Air Floatation....103

Appendix A Duwamish Basin CSO Control Alternatives
Appendix B South Magnolia CSO Control Alternatives
Appendix C North Interceptor CSO Control Alternatives
Appendix D Alki Basin CSO Control Alternatives
Appendix E West Seattle CSO Control Alternatives
Appendix F Norfolk Basin CSO Control Alternatives
Appendix G North Beach Pump Station Overflow Control
Appendix H Metro CSO 5-Year Update— Potential Joint Metro/City of Seattle CSO Projects (Task 4.05 Project)
Appendix I Metro CSO 5-Year Update—Separation Alternatives, Denny Regulator Station
Appendix J Metro CSO 5-Year Update—Transportation-Related Risk of Spills
Appendix K Metro CSO 5-Year Update—Separation Alternative, Ballard Regulator

TABLES

Table 4-1 Task 4 Document Reference to Task 5 Report. 3
Table 4-3 Unit Partial Separation Project Costs....15
Table 4-4 Impacts of CSO Control Technologies. 18
Table 4-5 Duwamish CSOs....21
Table 4-6 Duwamish Area CSO Storage Facilities[a]....22
Table 4-7 Industrial Area Separation/Storage Projects. 27
Table 4-8 Duwamish Onsite Treatment: Alternative 1—Vortex Separators. 28
Table 4-9 Duwamish Onsite Treatment: Alternative 2—Rectangular Storage/ Sedimentation Facilities....28
Table 4-10 Reduction in Overflows due to Southern Area Transfer to EDRP. 29
Table 4-11 Facility Costs Associated with Flow Transfer to EDRP at Renton. 30
Table 4-12 Costs for Duwamish CSO/Secondary Treatment Alternative....37
Table 4-13 Costs for Duwamish CSO Treatment Alternative. 39
Table 4-14 Southern Service Area Deep Tunnel Alternatives. 42
Table 4-15 South Magnolia CSO Control Alternatives. 43
Table 4-16 Existing North Interceptor CSO Conditions. 47
Table 4-17 Summary of North Interceptor CSO Alternatives....48
Table 4-18 Increase in CSO Volumes due to New Lake Line. 48
Table 4-19 Project Costs for University, Montlake, 3rd Avenue W Deep Tunnel Storage. 51
Table 4-20 Summary Descriptions of North Interceptor Storage Tank Alternatives....51
Table 4-21 Alternative University/Montlake Storage Tanks. 56
Table 4-22 Project Costs for 3rd Avenue West Alternatives....58
Table 4-23 11th Avenue NW Storage Alternative Project Costs. 58
Table 4-24 North Interceptor CSO Treatment Facilities....60
Table 4-25 Project Costs for North Interceptor CSO Treatment Alternatives. 61
Table 4-26 University/Montlake Separation Alternative Project Costs. 62
Table 4-27 Ballard Separation Cost Analysis. 62
Table 4-28 Alki Basin CSO Control Alternatives....65
Table 4-29 West Seattle CSO Existing Conditions....69
Table 4-30 Eighth Avenue S Regulator - Upstream Separation Analysis....73
Table 4-31 Eighth Avenue S Regulator - Downstream Separation Analysis....74
Table 4-32 West Seattle Basin CSO Control Alternatives....77
Table 4-33 Norfolk Basin CSO Existing Conditions. 81
Table 4-34 Norfolk Basin CSO Control Alternatives. 81
Table 4-35 Impact of Return Flows from CSO Storage/Treatment on West Point Design Flows. 92
Table 4-35 Capital Costs to Use West Point Clarifiers for Additional CSO Treatment. 100

FIGURES

Figure 4-1 Performance of West Point Primary Sedimentation Facilities for Suspended Solids Removal. 10
Figure 4-2 Kingdome–Industrial Area CSO Storage Sites. 23
Figure 4-3 Conceptual Layout of Brandon and Michigan CSO Treatment or Storage Sites. 24
Figure 4-4 Conceptual Layout of King/Connecticut and Hanford/Lander CSO Treatment or Storage Sites. 25
Figure 4-5 Location of Duwamish Centralized CSO Treatment Facility. 34
Figure 4-6 Conceptual Layout of South Magnolia CSO Control Storage Alternative. 45
Figure 4-7 Conceptual Layout of University Regulator to 6th Avenue West Deep Tunnel CSO Control Alternative. 50
Figure 4-8 University and Montlake Area Alternative Storage Tank Sites. 52
Figure 4-9 3rd Avenue West CSO Control Facilities. 53
Figure 4-10 Conceptual Layout of CSO Control Storage Alternative at 11th Avenue NW Weir. 54
Figure 4-11 Conceptual Layout of City and Metro Ballard CSO Control Storage Alternative. 55
Figure 4-12 Conceptual Layout for Alki Basin CSO Control Conveyance Storage Alternative. 67
Figure 4-13 Conceptual Layout for Harbor Avenue CSO Control Conveyance Alternative. 70
Figure 4-14 Conceptual Layout for Chelan Regulator CSO Control Conveyance Storage Alternative. 72
Figure 4-15 Total Project Cost as a Function of Additional Partial Separation for 8th Avenue South. 74
Figure 4-16 Conceptual Layout of 8th Avenue South CSO Control Storage Alternative 76
Figure 4-17 Conceptual Layout for SW Michigan Street CSO Control Diversion Alternative. 78
Figure 4-18 Alternative Sites for Terminal 115 CSO Control Storage Tank. 79
Figure 4-19 Conceptual Layout of Martin Luther King Way CSO Storage Tank. 83
Figure 4-20 Conceptual Layout of South Henderson Street CSO Control Storage Alternative. 85
Figure 4-21 Conceptual Layout of Norfolk CSO Control Storage Alternative. 87
Figure 4-22 Conceptual Layout of North Beach Pump Station Expansion CSO Control Alternative. 90

EXECUTIVE SUMMARY

Task 4 of the King County Combined Sewer Overflow (CSO) Control Plan 5-Year Update (Update) was established to generate preliminary alternatives to control CSOs for each King County overflow. Specific alternatives have been developed to a preliminary level that includes descriptions and capital cost estimates. This report presents the alternatives developed to achieve the once-per-year CSO control level in compliance with the State of Washington Department of Ecology regulations (WAC 173-245-020). These CSO control alternatives were the basis for developing system-wide alternatives (Task 5 report), and the service strategies in the Regional Wastewater Services Plan (RWSP). This report provides a table cross-referencing the CSO control alternatives presented herein with the CSO control components of the RWSP.

The discussion of CSO control alternatives is organized by drainage basins in the King County combined sewer collection and conveyance system. Development of alternatives included identification of potential control alternatives and sites, sizing of the control features, and development of planning level capital costs. Cost estimating was completed using a component cost method wherein the construction cost of various facilities were estimated from a planning level take-off of quantities combined with construction costs for similar items taken from recent construction contracts. Sizing and performance were estimated based on the results of King County's hydraulic model.

ALTERNATIVES DEVELOPMENT

CSO control alternatives were conceptually developed based on the results of King County's hydraulic model. Some of these alternatives were tested with the model to determine effectiveness and to refine sizing. This approach has been used for most of the alternatives presented in this report. In some cases, notably storage alternatives, the overflow volumes predicted by the model in the unaltered system have been used to size facilities. In the case of CSO treatment facilities, the analysis was conducted using basin hydrographs supplied by King County and the city of Seattle (Denny Way) or using the peak overflow rate predicted from a once per year storm event.

Current Ecology requirements for CSO control [WAC 173-245-020(22)] call for the reduction of untreated discharge events to a frequency of once per year on average at every CSO location. Control may be achieved by flow reduction (e.g., stormwater separation), storage to hold overflow volumes and bleed them back into the system for delivery to the West Point treatment plant as capacity becomes available after storms, or by providing the equivalent of primary treatment at the CSO locations (onsite treatment). Based on work completed during the 1988 CSO Control Plan development, control of overflows predicted by the hydraulic model for the specific storm known as Design Storm #6 would result in a long-term average of one untreated discharge per year. Accordingly, alternatives were formulated to control the overflows from this storm – either by storage or a combination of storage and partial separation of the overflow volume predicted from this storm, or by the equivalent of primary treatment with sizing criteria based on the peak rate of overflow from this storm. Specific criteria and considerations associated with treatment alternatives are discussed in this report. The treatment alternatives include some storage associated with the treatment tanks; this volume would be returned to West Point following storms and thereby reduces the annual overflow volume by about 30 percent.

During the CSO planning work, the U.S. EPA issued the federal CSO policy that requires control to four to six untreated overflows per year rather than the once per year level specified by

Ecology. This report includes the volumes and peak overflow rates for Storm #5 (four per year event) as well as Storm #6 (once per year event). Estimates of the size and cost reductions available by controlling to the federal standard can be made using these data based on the method described in this report.

BASIS OF SIZING AND COST ESTIMATING

Capital costs for those alternatives developed were performed in a manner consistent with King County's specifications. The method used for estimating costs provides planning level cost estimates for specific CSO control technologies such as separation, offline storage, treatment, and other associated elements (e.g., pump stations and force mains). This method, known as "component cost estimating," computes costs for specific CSO control facilities, based on costs for general components as opposed to specific construction items. The component cost estimating method is consistent with the other cost estimating methods used in preparing the RWSP. This method was selected for the following reasons: 1) it is more detailed than a method that uses only typical cost curves for specific CSO control facilities although not as detailed as a predesign cost estimating method, which is based on detailed material takeoffs; 2) it is capable of providing a planning level cost estimate with a minimum number of input parameters into the cost estimating spreadsheets; 3) it is capable of providing a planning level cost estimate for a specific CSO control system over a range of sizes and/or volumes; and 4) it provides consistent and professionally accepted cost estimates.

Sources of unit prices used in the method included the manufacturers of specific items, the Seattle Engineering Quarterly Unit Cost Report for 1992, construction cost bid tabulations for projects that were similar to the specific CSO control technology, and the Means Construction Cost Data document. All unit prices were adjusted to an ENR factor of 5630.

Other assumed allied costs used for the cost estimating included the addition of 10 percent for mobilization/demobilization and 10 percent for contractor's overhead and profit, 30 percent for contingency, 8.2 percent for sales tax on all items, and 35 percent for design and owner management. Property acquisition costs were based on $18.00 per square foot for central business property, $11.50 per square foot for suburban business property, and $6.90 for residential property. The sum of the estimated construction cost, allied costs, and property acquisition costs is termed the "Project Cost."

The estimated costs for partial separation alternatives presented in this document were derived from detailed cost estimates developed for the Ballard No. 3 basin and for basins tributary to the Denny Regulator (including both Denny Local and Denny-Lake Union). In these detailed estimates, storm sewers were laid out according to current city of Seattle standards. Costs for installation of these sewers were then developed in detail based on experience from the recent pre-designs conducted for the Michigan, Brandon, and Connecticut regulator project areas. Costs developed vary by street type (concrete or asphalt) and by land use (residential or commercial/industrial), and include necessary appurtenances such as manholes and catchbasins. Sewers were sized for runoff from the entire area, but it is assumed that only street runoff and large easily separated parking lots are intercepted. A separate estimate was made for stormwater pollutant mitigation facilities, using compost filters as the representative technology.

The cost estimates for Ballard and Denny basins were used as the basis for projecting partial separation costs in other areas. The total project costs resulting from the detailed estimates were evaluated to determine project costs of separation per acre of residential and

commercial/industrial land use. These per acre costs were then applied to separation alternatives developed in other basins.

As is noted in a separate report (*Separation Alternative Ballard Regulator and No. 1 Weir: Basin No. 3 - 16th Avenue NW / 25th Avenue NW*) on the detailed separation studies, separation may result in a small decrease or an increase in annual loading of certain pollutants to the receiving waters. It is also known that stormwater sediments in the urban area do not meet Ecology sediment standards for marine waters. While it is not yet clear exactly what measures will be required to mitigate pollutant loading associated with separation, some measure of Best Management Practices (BMPs) will be required. To estimate the cost that could be associated with BMPs, this study used compost filters as a representative technology usable in the urban environment to pretreat stormwater. A discussion of the performance of compost filters is presented in the separation report.

An alternative BMP for storm drains is the use of low flow diversions. Such structures divert a small flow from the storm drains back to the combined sewer to capture the day-to-day small flows generated by moderate rain. The captured flows reduce the chronic loading of pollutants to the receiving waters. Low flow diversions have been a feature of city of Seattle partial separation projects constructed since the mid 1980s.

Unit-per-acre costs ranges used in alternative development outside the Ballard and Denny basins are significantly higher than used in previous studies due to differences in city of Seattle standards and cost estimating method. Current standards call for use of a 25-year storm for drainage design rather than a 10-year storm used in previous studies. In addition, Seattle requires replacement of the entire half panel of the street surface for installation of sewers in concrete covered streets and will not permit sewers to be installed in parking strips. The current estimates also include a significant item for utility interference that was not included in previous studies.

CSO CONTROL PROJECT IMPACTS

Both temporary and permanent impacts on the natural environment can result from project construction. Minor temporary impacts include sediment transport from construction sites. Treatment plant outfall construction has the more significant temporary impact of disturbing bottom-dwelling marine life and possibly disrupting anadromous fish passage-ways. Permanent environmental impacts may include, depending on the particular technology associated with each alternative, the handling of significant quantities of construction spoils, permanent rerouting of surface water drainage ways, and, for the separation alternatives, the possibility of increasing the loadings of some metals and organic contaminants into receiving waters.

Impacts on the social environment may include temporary construction-related disturbances and more permanent disruptions. Construction-related impacts include traffic detours and restrictions and limitations in access to residences, businesses, schools, and recreational areas. Permanent impacts include noise, odor, and the possible unappealing aesthetics of above-ground structures. Related to the effects of each alternative project on the social environment is the issue of fairness and equity. The social impacts of each project will be directly related to the perceptions of the residents concerning the impacts their neighborhoods have already shouldered for industrial and municipal facilities. This issue will assume less importance in industrial areas than in residential neighborhoods.

Direct impacts to public health and safety from any of the CSO projects are limited; however, the traffic congestion resulting from construction can be seen as posing some risk to public safety.

Also, the potentially hazardous treatment chemicals that may be used in particular odor control and CSO treatment plants, may present a slight risk to health and safety in the event that routine safety handling procedures are disrupted.

In general, potentially negative impacts to the natural and social environment, and public health and safety need to be weighed against the benefit of all alternatives of reducing CSO discharges to once per year. This reduction will be beneficial to marine and freshwater biological systems, enhance the recreational value of the affected waterways, and reduce the potential for negative impacts to human health.

The impacts of the alternative CSO control projects are generally similar for projects involving similar facility components. The various impacts associated with storage tanks, treatment plants, and separated storm drains are shown on Table 4-4. Impacts peculiar to particular projects are addressed in the sections describing the individual alternatives.

OTHER ISSUES

A number of other issues associated with the planning efforts for system-wide CSO control are discussed in this report. A summary of these issues is listed below:

- Ongoing costs associated with sewer separation projects
- Impact of garbage grinders on CSO projects
- Roof drain disconnections
- Modifications in street cleaning practices
- West Point bypass as a CSO discharge location
- West Point secondary clarifiers used for CSO treatment
- Seasonal discharge to the Duwamish River
- New technologies (vortex separators, Microsep or Actiflo, fine screens, direct filtration, dissolved air floatation).

INTRODUCTION

Task 4 of the King County Combined Sewer Overflow (CSO) Control Plan 5-Year Update (Update) was established to generate preliminary alternatives to control CSOs. A number of control options for the major CSO groups in the King County combined sewer system were outlined in the brainstorming workshop held on December 9, 1993 as a part of Task 3 of the Update. Based on the directions and ideas generated in that workshop, specific alternatives have been developed to a preliminary level including descriptions and capital cost estimates. This document presents the alternatives developed to achieve the once-per-year CSO control level.

Introductory sections of this document include discussions of the method used for hydraulic analysis, the basis for capital cost estimating including a discussion specific to cost estimating for partial separation; issues relating to onsite CSO treatment; and environmental, social, and permitting issues associated with each type of CSO technology. The introductory sections also present a table cross-referencing the CSO alternatives presented in this document with the CSO control components of the Regional Wastewater Services Plan (RWSP).

The presentation of the CSO control alternatives is organized according to the various drainage basins that comprise the King County combined sewer collection and conveyance system. These basins and CSO locations include:

- Duwamish Area: Michigan, Brandon, Hanford, Lander, Connecticut, and King CSOs
- Denny/Lake Union Area: Denny Way and Dexter CSO locations (alternatives for this basin are contained in separate reports—*Denny Regulator Accelerated CSO Control Program Report, February 1995* and *Denny Way/Lake Union CSO Control Project Draft Facility Plan, May 1997*)
- Centralized Treatment impacting Duwamish and Denny Way CSO locations
- Southern Service Area Deep Tunnel Storage: Duwamish area, Denny, and 3rd Avenue West
- North Interceptor Basin: University, Montlake, 3rd Avenue West, Ballard and 11th Avenue NW
- Alki Basin: Barton, Murray, and SW Alaska CSO locations
- West Seattle Basin: 8th Avenue South, West Michigan, Terminal 115, Harbor, and Chelan
- Norfolk Basin: South Henderson, Martin Luther King Junior Way, and Norfolk
- In addition, two other locations were evaluated as isolated CSOs independent of any larger subsystem: South Magnolia CSO and North Beach Pump Station overflow.

For each alternative presented, summary information is provided on the design CSO flows, size and location of various facility components, capital costs, and related issues. Detailed cost breakdowns and features of some of the major components are provided in Appendices A through G. In addition, Appendices H through K contain copies of previous Metro CSO 5-Year Update reports.

Following the presentation of the alternatives, a number of miscellaneous programs and issues are discussed which relate to future planning for system-wide CSO control. These issues include programs affecting additional source control for CSO quantity and quality such as roof drain disconnection and street sweeping, and the future use of the West Point secondary treatment facilities for CSO control.

RWSP CROSS REFERENCE

The Task 5 report, *Metro CSO 5-Year Update Task 5 Report, Metro RWSP, Supporting CSO Project Descriptions* (Brown and Caldwell for King County, August 1995) was prepared detailing the CSO control alternatives that would be included in the development of comprehensive system-wide plans for wastewater handling in King County. These CSO control alternatives were designed to be compatible with the various Wastewater 2020+ configurations. Table 4-1 lists the various RWSP CSO control groupings and indicates where in this Task 4 document the discussion of those CSOs are located.

Table 4-1. Task 4 Document Reference to Task 5 Report.

CSO Group from Task 5 Report	Group Description	Task 4 Report Projects Included	Task 4 Report Page Number
1 Do not depend on RWSP configuration	Small storage tanks with outlying CSOs	8th Avenue S 1.0 MG storage West Michigan conveyance improvement Terminal 115 - 0.5 MG storage Harbor conveyance MLK Way 6.2 MG storage Henderson 1.3 MG storage Norfolk 0.75 MG storage S. Magnolia 1.3 MG storage Murray 0.5 MG storage Barton 7.5 mgd pump station SW Alaska 0.6 MG storage North Beach pump station enhancement and storage West Point improvements Chelan 4.0 MG storage[a]	73 75,77 75,77 69 82 84 84 43 66 66 66 89 91 71
2a1 No new Kenmore Lake Line	Storage Tanks	University/Montlake 7.5 MG storage 3rd Avenue W 5.5 MG storage Ballard 1.0 MG storage 11th Avenue NW 1.7 MG storage	51 57 59 58
2a2 No new Kenmore Lake Line	Deep Tunnel	University/Montlake 3rd Avenue W	47 47
2b1 New Kenmore Lake Line	Storage Tanks	University/Montlake 12.0 MG storage 3rd Avenue W 7.0 MG storage Ballard 1.0 MG storage 11th Avenue NW 2.0 MG storage	51 57 59 58
2b2 New Kenmore Lake Line	Deep Tunnel	University/Montlake 3rd Avenue W	47 47
2c with or without New Lake Line	Onsite Treatment	University/Montlake storage/treatment 3rd Avenue W storage/treatment Ballard 1.0 MG storage 11th Avenue NW storage/treatment	60 60 59, 60 60
3b	Duwamish Secondary with CSO Treatment	Hanford/Lander storage/conveyance Michigan/Brandon conveyance Enlarge regulator station diversions CSO treatment w/ Secondary CSO outfall Denny project less Elliott West facilities	35 35 36 36 36 36-37
3c	Duwamish CSO Treatment	Hanford/Lander storage/conveyance Michigan/Brandon conveyance Connecticut/King separation/storage Enlarge regulator station diversions CSO treatment	37-39 37-39 37-39 37-39 37-39

CSO Group from Task 5 Report	Group Description	Task 4 Report Projects Included	Task 4 Report Page Number
		CSO outfall Denny upgrade w/ storage/treatment	37-39 37-39
4	Transfer flow from WPSSA to Renton	Hanford/Lander 6.5 MG storage Connecticut/King 2.5 MG storage Michigan separation/storage Brandon separation/storage Denny upgrade w/ Vortex treatment	29 29 30 30 30, 31
5a	Distributed CSO Treatment	Michigan Vortex treatment Brandon separation/storage Hanford/Lander Vortex treatment Connecticut/King Vortex treatment Denny upgrade w/ Vortex treatment	27-29 27-29 27-29 27-29 30, 31
5b	High Rate CSO Treatment	Michigan storage/treatment (2.1 MG) Brandon storage/treatment (0.7 MG) Hanford/Lander storage/treatment (4.8 MG) Connecticut/King storage/treatment (2.1 MG) Denny upgrade storage/treatment (1.0 MG)	27-29 27-29 27-29 27-29 30, 31
6	Separation /Storage with CSO Treatment	Michigan separation/storage Brandon separation/storage Hanford/Lander Vortex treatment Connecticut/King separation/storage Denny upgrade w/ Vortex treatment	26 26 26 26 30, 31
7a	CSO Deep Tunnel with Alki CSO Plant in operation	Michigan/Brandon conveyance to tunnel Hanford/Lander/Connecticut/King storage Denny storage less Elliott West facilities	41 41 41

[a] Chelan is carried as the same project in Task 5 groups 3 through 7

HYDRAULIC ANALYSIS

This section discusses the basis for sizing control projects using output from the King County Hydraulic Model, the impact of the peak flow set point at the West Point Treatment Plant, and method used to estimate facility sizes and costs for projects meeting the federal CSO policy control level of four untreated overflows per year.

KING COUNTY HYDRAULIC MODEL

Part of the King County 1988 CSO Control Plan was development of a state-of-the-art hydraulic model. This model was to be used in an updated computer augmented treatment and disposal (CATAD) computer system to improve operation of the system and CSO capture. This model is capable of solving the complete equations of motion, which permits simultaneous solution of both depth of flow and flow rate everywhere within the system. This capacity provides for a degree of accuracy not available in previous studies. In particular, the new model accounts for downstream conditions that may increase overflows (changes in pumping rate at the Interbay pump station for example), and for pipe surcharge that simpler models may inaccurately indicate to be an overflow.

King County's hydraulic model is the basis for development of CSO control programs in this study. Alternatives have been developed conceptually based on model results. Some of these alternatives were tested with the model to determine effectiveness and to refine sizing. This approach has been used for most of the alternatives presented in this report. In some cases, notably storage alternatives, the overflows predicted by the model in the unaltered system have been used to size facilities. In the case of CSO treatment for the Denny Regulator, the analysis was conducted using basin hydrographs supplied by King County and the city of Seattle. In final design, selected alternatives will be fully tested in King County's hydraulic model.

WEST POINT PEAK FLOW SET POINT

In the operation of the system, West Point has the ability to vary the CATAD set point for flow into the plant. The current modifications to the plant are designed for a peak flow of 440 mgd entering the plant with 300 mgd of that given secondary treatment and the remainder receiving only primary treatment prior to disinfection and disposal. Concern has been expressed that the plant will not always be able to permit 440 mgd peak flows due to safety concerns and equipment malfunctions. To achieve a lower peak flow, CATAD will reduce flows out of the Interbay pump station. This will result in a significant increase in overflow from the Elliott Bay Interceptor (EBI) at the Denny Regulator, and to a lesser extent at the Hanford, Lander, Connecticut, and King Street regulators. On the other hand, a set point of 440 mgd will result in increased overflows along the North Interceptor (NI) at the University and Montlake regulators, and at the 3rd Avenue West and 11th Avenue Northwest overflow weirs.

In this report, alternatives are presented for the worst case condition (i.e., control facilities along the EBI were sized for a 400 mgd set point, and those along the NI were sized for a 440 mgd set point). It is expected that the West Point Plant will make every effort to achieve the higher flow except in emergency conditions so that this approach is appropriate for the NI. The increase in

size for the EBI facilities is modest except for Denny Way, and is critical only for storage projects. Sizing of CSO treatment projects along the EBI would not be affected by the set point.

Table 4-2 presents a summary of the baseline and design storm flows for each CSO location at the two alternate West Point set points.

STATE OF WASHINGTON CSO CONTROL REGULATION PROJECTS

The State of Washington Department of Ecology (Ecology) CSO control regulations (WAC 173-245-020) call for control of CSOs at each outfall to a level of once per year. Control is defined as either a long-term average discharge of no more than once per year, or by providing the equivalent of primary treatment (50 percent suspended solids removal on an annual average basis and an effluent requirement of 0.3 mL/L or less of settleable solids).

Results of previous and ongoing studies (*1985 CSO Control Plan* and *Denny Facility Plan*) indicate that the state control level can be achieved by designing facilities to control a particular historical storm event. This storm, known as Design Storm #6, occurred in November 1982. In this study, CSO projects meeting the Ecology criteria were sized to control this storm. For storage projects, the volume of the facility is equal to the expected overflow volume from Design Storm #6. For CSO treatment projects, the facilities were sized according to the peak rate of overflow that is expected from this storm based on King County model simulations.

FEDERAL CSO POLICY CONTROL PROJECTS

The federal CSO policy applies a different standard to control level than does Ecology. The federal policy allows between four and six untreated discharge events per year as compared to one event as a 'presumptive' standard. Further, the federal policy defines CSO treatment for control as achieving at least 35 percent total suspended solid (TSS) removal as compared to 50 percent for Ecology, and the federal standard does not mention settleable solids.

As a general rule, adherence to the federal policy control level rather than the Ecology requirement could result in cost savings on the order of 30 percent for most projects. The CSO control schedule developed for the RWSP includes some projects that were initially developed to the federal policy level and later in the program, additions were scheduled to upgrade these to the Ecology standard of once per year.

Based on previous analyses, King County Design Storm #5 has been taken as representative of a four times per year overflow. Thus, alternatives for the four per year control level were sized according to the following conditions:

- For storage projects, the overflow volume predicted for Storm #5 was used to size facilities. Where this volume was greater than for Storm #6 (once per year event), the volume for Storm #6 was used.
- For CSO treatment projects, the peak overflow rate from Storm #5 was used to size facilities. Where this rate was greater than for Storm #6, the rate from Storm #6 was used.

Table 4-2. CSO Annual and Design Storm Summary

CSO Location	1981-3 Baseline Annual Volume		1998 Baseline						
			West Point @ 440 mgd			West Point @ 400 mgd			Annual Overflow Frequency
	88 Plan MG	Revised MG	Annual CSO, MG	Storm #6 MG	Peak flow mgd	Annual CSO, MG	Storm #6 MG	Peak flow mgd	
Elliott Bay Interceptor									
8th Avenue S	15	15	12	1.3	16	12	1.3	16	12
W. Michigan	2	2	2	0.1	2	2	0.1	2	9
Terminal 115		5	5	0.5	6.6	5	0.5	6.6	8
Harbor	55	55	58	3.4	17	58	3.4	17	56
Chelan	25	73	66	4	37	66	4	37	25
MLK Way		88	88	6.2	63	88	6.2	63	23
S. Henderson PS		10	10	1	5	10	1	5	16
Norfolk	4	60	6	0.7	13	6	0.7	13	6
Michigan	250	190	173	13.1	75	173	13.1	75	40
Brandon	35	60	57	4.5	25	57	4.5	25	40
Duwamish PS	130	1	1			1			<1
Hanford #1[a]			7	0.6	16	7	0.6	16	7
Hanford #2	680	605	202	18.5	89	207	18.8	89	23
Lander	215	190	161	15	54	164	15.2	55	23
Connecticut	90	90	91	9.1	55	93	9.2	55	25
King Street	70	55	23	1.6	22	33	2.2	24	31
Denny Local			79	5.7	34	82	6.6	34	51
Denny Lake Union			265	22.7	106	270	23.1	106	51
Interbay	370	405	8	0.1		103	5.5	70	4 or 21[b]
S. Magnolia		15	15	1.3	11	15	1.3	11	21
North Interceptor									
Dexter	12	15	15	0.5	17	15	0.5	17	4
3rd Avenue West	105	125	51	5.5	37	33	3.7	30	12
Canal St.	10	1	0	0	0	0	0	0	<1
University	211	110	58	6.6	129	48	5.7	124	8
Montlake	40	10	4	0.8	24	4	0.8	27	4
Ballard			4	0.4	6	1	0.1	4	5
11th Avenue NW	90	90	18	1.7	20	16	1.5	19	15
North Beach		2	2	0.5		2	0.5		18
Alki Beaches									
Murray PS		5	5	0.6		5	0.6		8
Barton		7	7	0.6		7	0.6		23
Beach Dr.		12	12	0.7		12	0.7		23
63rd Avenue PS		95	0	0		0	0		<1
Associated City of Seattle CSOs									
Ballard			6 to 7	0.63	11	6 to 7	0.6	11	
East Lake Union			86	8.4	35	86	8.4	35	
Total Metro	2,409	2,391	1,505	127		1,595	132		

[a] 1998 value for Hanford#1 are from Hanford @ Rainier on the east side of the Hanford St. Tunnel.
[b] Value depends on West Point flow set point.

Cost estimates were made for the once per year projects (sized for control of Storm #6) and were not generated separately for the four per year projects. The project cost for storage tanks varies linearly with the total storage volume. Thus, the cost for smaller facilities was taken as the ratio of the Storm #5 overflow volume to the Storm #6 volume times the cost estimate for the one per year project. For CSO treatment facilities, the costs varies as the ratio of the peak overflow rate for the two design storms.

ONSITE CSO TREATMENT

Alternatives involving centralized CSO treatment have significant costs associated with the movement of water from the individual CSOs to the central treatment plant. In many areas of the country and elsewhere, it is common to provide treatment facilities at individual outfalls or groups of outfalls to avoid the costs associated with conveyance to a central site. Likewise, the storage tanks required for the larger CSO locations to contain the once per year overflow are significantly larger and more costly than a CSO storage/treatment facility sized for the same storm. Several of the CSO control alternatives involve consideration of onsite treatment to limit the discharge of untreated CSOs. A nationwide survey conducted of utility agencies (Moore, Marvin, Denny Way Program Management Team, *CSO Treatment Technologies Evaluation*, Denny Way/Lake Union CSO Control Project, July, 1996) indicated that both rectangular primary sedimentation tanks and vortex separators were established technologies in use for CSO treatment. This section describes the series of evaluations that were conducted to determine feasible technologies for onsite treatment and the criteria recommended for use in design.

Primary sedimentation tanks provide quiescent conditions that promote the settling of particles that are heavier than water. Typical overflow rates and the depth required for solids capture result in tanks sized that provide storage as well as treatment. Vortex separator tanks are cylindrical and contain internal baffles which effectively swirl the wastewater, creating vortices that concentrate solids near the bottom of the tank. Because this technology is not reliant on quiescent settling conditions, the tanks are typically designed with smaller surface areas and higher loading rates than sedimentation tanks providing similar solids removals. For this reason, lower facility capital costs are often associated with vortex separators. Because vortex separators are cylinders with a maximum diameter of 40 ft and have a steeply sloping bottom, they are considered to have lower operating costs than sedimentation tanks due to ease of clean-up after storm events.

Pilot tests of this technology conducted at West Point during the spring of 1995 indicate that vortex separators performed similarly to the existing primary sedimentation facilities at West Point. Both technologies have a suspended solids removal performance that varies inversely with surface overflow rate (SOR) and directly with influent suspended solids concentration. This means that as the influent concentration is reduced to values of 100 mg/L or lower, typical of CSOs, then the SOR necessary to achieve 50 percent removal must be drastically reduced as shown in Figure 4-1 (Zaroff, B., and Merrill, M.S., *CSO Waste Load and Mass Balance*, Denny Way Program Management Team, July 1995 Draft Report).

Ecology's CSO regulations state that the equivalent of primary treatment will meet the once per year discharge goal. Primary treatment is defined in WAC 173-245-020 as 50 percent total suspended solids (TSS) removal and the discharge of less than 0.3 mL/L/hr of settleable solids. The criteria for the design of primary sedimentation tanks presented in the Ecology *Criteria for Sewage Works Design* were established to accomplish the removal of 50 to 60 percent of the solids loading typically found in sanitary sewage. The recommended surface overflow rates (800 to 1,200 gallons per day per square foot [gpd/square foot] at average flow; 2,000 to 3,000 gallons per day per square foot at peak flow) are based on particle settling velocities characteristic of sanitary sewage and are not necessarily applicable to CSOs.

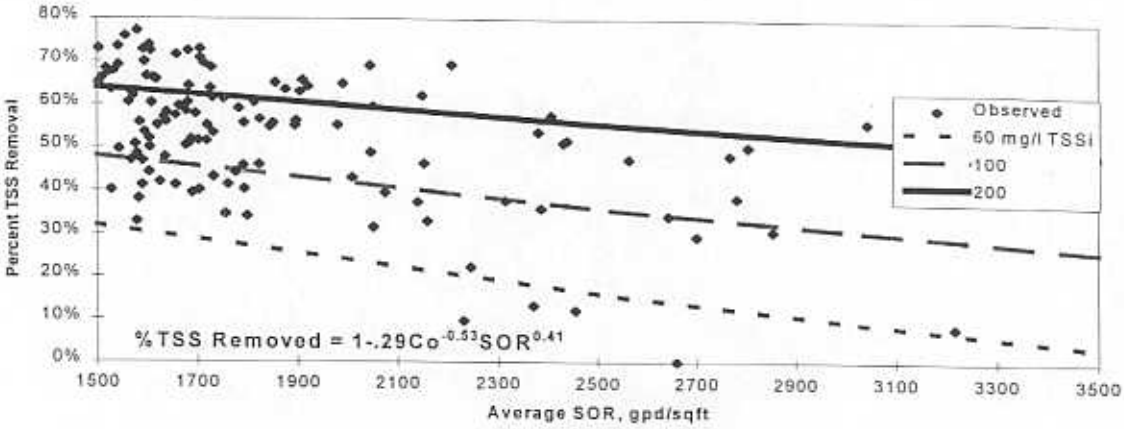

Figure 4-1. Performance of West Point Primary Sedimentation Facilities for Suspended Solids Removal.

The historical King County CSO data indicate that the influent TSS concentrations are expected to range from 30 to 1,000 mg/L, with an average of approximately 125 mg/L. These data show a generally inverse relationship between flow rates and influent TSS concentrations, high CSO flows generally having lower TSS concentrations. However, the TSS concentrations of the lower flow CSO events vary considerably. The analysis indicates that little removal will occur during large events when the influent suspended solids concentration is low. During smaller events, however, when SORs are low and influent concentrations are higher, removals should be higher. Further, Ecology is expected to apply the regulation as an annual average on a mass basis accounting for the volume of CSO stored in the tanks and later sent to West Point for treatment. With this approach, treatment facilities can be designed with an optimum combination of storage volume and surface area to achieve the annual removal requirement.

Limited data on settleable solids removal are available from the vortex separator pilot study. The data indicate that the conditions under which the Ecology criteria of 0.3 mL/L/hr could be met were restrictive: large storage volumes and very low surface overflow rates would be required. Carkeek experience suggests that this effluent standard might be met if it were applied as a long-term average rather than a maximum for each event. Meeting the 0.3 mL/L/hr standard for each event would require additional facilities such as dissolved air floatation and chemical addition.

Based on the analysis of performance data at Alki, Carkeek, and West Point, CSO primary treatment facilities were sized to provide a maximum surface overflow rate of 4,000 gpd/square foot at the peak of the once per year design event (Storm #6). This is consistent with the design of existing King County primary treatment facilities. The average rate during this event will be below 2,000 gpd/square foot and will be even lower during the numerous smaller events that occur during the year.

Vortex separators were sized with two sets of units—primary units designed to take the entire CSO flow at a peak rate of 7,000 gpd/square foot in Storm #6, and secondary units to receive the solids laden underflow from the primary units (a stream consisting of about 10 percent of the

actual CSO flow) operating at 3,000 gpd/square foot for the purpose of further concentration of removed solids. Because the vortex units must have a depth equal to their diameter (30 to 40 ft), the excavation costs relative to rectangular sedimentation tanks (15 ft deep) causes them to have a higher construction cost even though the surface area is smaller. However, the ease of clean-up of vortex separators and the ease of adding dissolved air floatation for additional treatment performance may warrant the higher construction cost.

Both vortex separators and rectangular sedimentation tanks will provide little removal of heavy metals and organic pollutants because these pollutants are either dissolved (will not settle out), or are associated only with the smaller suspended solids particles in the CSO that are not removed. Removals of these pollutants will thus be little more than the reduction in discharge volume afforded by the tank volumes. If a high removal of metals is required, then dissolved air floatation with chemical addition will be required. The CSO treatment facilities considered here could be upgraded in the future if receiving water impact studies dictate. Even with this low removal of metals, analysis indicates that CSO treatment still provides a greater reduction in metals loading to the receiving waters than does partial separation as a control method.

All CSO treatment facilities included in this report assume the addition of disinfection to reduce fecal coliform bacteria to water quality standards. Unless otherwise noted, the facilities are assumed to discharge out the existing outfalls. In the industrial area, the facilities were assumed to have the top of the tanks near the existing grade. Aluminum covers would be installed. In other areas, the facilities are assumed to be below grade. Odor control is included in all cases.

A sensitivity analysis was conducted to address the potential to provide enhanced treatment to meet the settleable solids requirement. It was assumed in this analysis that the requirement would be met by the addition of dissolved air flotation (DAF) with chemical addition to enhance the removal of finely divided particles. This technique is being used in Columbus, Georgia to enhance treatment of CSOs. The cost analysis indicates that the addition of DAF to modified high rate rectangular CSO treatment systems would increase capital costs about 10 percent (range is from 5 to 12 percent), and increase operational costs approximately 100 percent.

COST DEVELOPMENT

Capital costs for alternatives developed in this (and subsequent tasks) were performed in a manner consistent with King County's specifications. The methodology is described in the following paragraphs.

COMPONENT COST ESTIMATING

A method for estimating costs was used that provides planning level cost estimates for specific CSO control technologies such as separation, offline storage, treatment, and other associated elements, such as pump stations and force mains. This method is known as "component cost estimating." This method computes costs for specific CSO control facilities based on costs for general components as opposed to specific construction items. This particular cost estimating method is consistent with the other cost estimating methods used in preparing the RWSP and was selected for the following reasons:

- More detailed than a method that uses only typical cost curves for specific CSO control facilities and is not as detailed as a predesign cost estimating method, which is based on detailed material takeoffs.
- Capable of providing a planning level cost estimate with a minimum number of input parameters into the cost estimating spreadsheets.
- Capable of providing a planning level cost estimate for a specific CSO control system over a wide range of sizes and/or volumes.
- Provides consistent and professionally accepted cost estimates.

The development of the component cost system first required the creation and agreement on a list of the major components for each of the CSO control facilities. The component lists were prepared by grouping specific construction items together under general component headings. An example listing of components for rectangular storage facilities includes:

- Concrete
- Temporary Sheeting and Shoring
- Excavation
- Backfield - Native Material
- Backfield - Imported Material
- Piling
- Sluice Gates
- Pumps and Mechanical Equipment
- Street Restoration
- Right-of-Way/Property Acquisition
- Utility Interference
- Aeration (as a representative method of settled solids control)
- Mechanical Washdown Systems
- Odor Control
- Traffic Control
- Dewatering.

Each of these components is assumed to contain other specific construction items that are accounted for within the unit cost associated with the particular component. For example, the general component, "Pumps and Mechanical Equipment" includes the material costs associated

with the pumps, valves, motors, and piping in addition to the costs associated with the electrical systems, the installation, and start-up.

One of the goals of the component cost system was to provide a method that would estimate costs for a specific CSO control technology over a range of facility sizes. Therefore, a quantity takeoff analysis was performed for each CSO control facility over the anticipated range of sizes for that particular facility. For the rectangular storage facilities, the quantities for each of the general components were estimated for storage facilities ranging in size between 1 million gallons and 20 million gallons. In this way, equations were established that expressed the increased growth of a given cost component required as the size of a given control system increased.

The next step was to assign unit price components to each of the control systems. Sources of the unit prices included the manufacturers of specific items, the Seattle Engineering Quarterly Unit Cost Report for 1992, construction cost bid tabulations for projects that were similar to the specific CSO control technology, and the Means Construction Cost Data document. All unit prices were adjusted to January 1994 using an ENR factor of 5630.

Other assumed allied costs used for the cost estimating included the addition of 10 percent for mobilization/demobilization and 10 percent for contractor's overhead and profit, 30 percent for contingency, 8.2 percent for sales tax on all items, and 35 percent for design and owner management. Property acquisition costs were based on $18.00 per square foot for central business property, $11.50 per square foot for suburban business property, and $6.90 for residential property. The sum of the estimated construction cost, allied costs, and property acquisition costs is termed the "Project Cost" and is reported as such in this document.

PARTIAL SEPARATION COST ESTIMATES

The estimated costs for partial separation alternatives presented in this document were derived from detailed cost estimates developed for the Ballard No. 3 basin and for basins tributary to the Denny Regulator (including both Denny Local and Denny-Lake Union). In these detailed estimates, storm sewers were laid out according to current city of Seattle standards. Costs for installation of these sewers were then developed in detail based on experience from the recent pre-designs conducted for the Michigan, Brandon, and Connecticut regulator project areas. Costs developed vary by street type (concrete or asphalt) and by land use (residential or commercial/industrial), and include necessary appurtenances such as manholes and catchbasins. Sewers were sized for runoff from the entire area, but it is assumed that only street runoff and large easily separated parking lots are intercepted. A separate estimate was made for stormwater pollutant mitigation facilities, using compost filters as the representative technology.

The cost estimates for Ballard and Denny basins were used as the basis for projecting partial separation costs in other areas. The total project costs resulting from the detailed estimates were evaluated to determine project costs of separation per acre of residential and commercial/industrial land use. These per acre costs were then applied to separation alternatives developed in other basins.

In the original development of sewer layouts for partial separation, a decision was made to include 12-inch storm sewers running half way up alleyways to intercept local drainage. Review by the city of Seattle suggested that this is not their normal practice and may bias the cost estimates upward. Based on analysis of the Denny separation alternative, the storm sewers in

alleyways represent about a 16 percent increase in cost. Because it is not clear that storm sewers in alleyways would never be used, a range of costs is presented with and without these sewers.

As is noted in a separate report (*Separation Alternative Ballard Regulator and No. 1 Weir: Basin No. 3 - 16th Avenue NW / 25th Avenue NW*; see Appendix K) on the detailed separation studies, separation may result in a small decrease or an increase in annual loading of certain pollutants to the receiving waters. It is also known that stormwater sediments in the urban area do not meet Ecology sediment standards for marine waters. While it is not yet clear exactly what measures will be required to mitigate pollutant loading associated with separation, some measure of best management practices (BMPs) will be required. To estimate the cost that could be associated with BMPs, this study has used compost filters as a representative technology usable in the urban environment to pretreat stormwater. A discussion of the performance of compost filters is presented in the separation report. It has been assumed based on performance estimates and water quality standards, that one filter would be required for each 5 acres of residential land use and for each 4 acres of commercial/industrial land use. The estimated construction cost of these units is $24,000 each. With contingency, sales tax, and allied costs added, the total project cost is $45,500 each. Because of the uncertainty as to extent of application that will be required, a cost range for separation has been presented both with and without the addition of compost filters.

An alternative BMP for storm drains is the use of low flow diversions. Such structures divert a small flow from the storm drains back to the combined sewer to capture the day to day small flows generated by moderate rain. The captured flows reduce the chronic loading of pollutants to the receiving waters. Low flow diversions have been a feature of city of Seattle partial separation projects constructed since the mid-1980s.

Unit-per-acre costs ranges used in alternative development outside the Ballard and Denny basins are shown in Table 4-3. These costs are significantly higher than used in previous studies due to differences in city of Seattle standards and cost estimating method. Current standards call for use of a 25-year storm for drainage design rather than a 10-year storm used in previous studies. In addition, the city requires replacement of the entire half panel of the street surface for installation of sewers in concrete covered streets and will not permit sewers to be installed in parking strips. The current estimates also include a significant item for utility interference that was not included in previous studies.

Table 4-3. Unit Partial Separation Project Costs.

Cost Item	Residential Land Use Dollars per acre[a]	Commercial/Industrial Land Use Dollars per acre[a]
Basic Separation	100,000	123,000
Alleyway Sewers	16,500	20,300
Compost Filters	9,100	11,400
High Estimate	$126,000	$155,000
Low Estimate	$100,000	$123,000

[a] Project Costs include estimated Construction and Allied Costs

CSO CONTROL ELEMENTS: IMPLEMENTATION AND IMPACT

A number of non-technical issues were also evaluated for each alternative. These issues include project flexibility; permitting and site acquisition; and the impacts of the project on the natural environment, social environment, and public health and safety.

The issue of flexibility relates to the ability of a project to accommodate future expansion or to be incorporated into system-wide modifications. Generally, projects that require additional property acquisition or large-scale construction for expansion are not considered flexible. Projects that do not preclude the future implementation of complementary projects, such as separation, or can be readily expanded without additional property acquisition or significant capital outlay, are considered flexible. Likewise, facilities that can be incorporated into the operation of potential future system modifications are viewed as flexible.

All of the projects under consideration will require the acquisition of a number of permits. However, the permitting process associated with certain categories of projects will probably be more complicated and lengthy than others. In particular, treatment plant outfalls will require the issuance of a Shorelines Management Permit. Projects that involve the acquisition of property through purchase or gaining of easements will require more lead time than those that can be constructed on property for which the county already has building rights.

Both temporary and permanent impacts on the natural environment can result from project construction. Minor temporary impacts include sediment transport from construction sites. Treatment plant outfall construction has the more significant temporary impact of disturbing bottom-dwelling marine life and possibly disrupting anadromous fish passage-ways. Permanent environmental impacts may include, depending on the particular technology associated with each alternative, the handling of significant quantities of construction spoils, permanent rerouting of surface water drainage ways, and, for the separation alternatives, the possibility of increasing the loadings of some metals and organic contaminants into receiving waters.

Impacts on the social environment may include temporary construction-related disturbances and more permanent disruptions. Construction-related impacts include traffic detours and restrictions and limitations in access to residences, businesses, schools, and recreational areas. Permanent impacts include noise, odor, and the possible unappealing aesthetics of above-ground structures. Related to the effects of each alternative project on the social environment is the issue of fairness and equity. The social impacts of each project will be directly related to the perceptions of the residents concerning the impacts their neighborhoods have already shouldered for industrial and municipal facilities. This issue will assume less importance in industrial areas than in residential neighborhoods.

Direct impacts to public health and safety from any of the CSO projects are limited; however, the traffic congestion resulting from construction can be seen as posing some risk to public safety. Also, the potentially hazardous treatment chemicals that may be used in particular odor control

and CSO treatment plants, may present a slight risk to health and safety in the event that routine safety handling procedures are disrupted.

In general, potentially negative impacts to the natural and social environment, and public health and safety need to be weighed against the benefit of all alternatives of reducing CSO discharges to once per year. This reduction will be beneficial to marine and freshwater biological systems, enhance the recreational value of the affected waterways, and reduce the potential for negative impacts to human health.

The impacts of the alternative CSO control projects are generally similar for projects involving similar facility components. The various impacts associated with storage tanks, treatment plants, and separated storm drains are shown on Table 4-4. Impacts peculiar to particular projects are addressed in the sections describing the individual alternatives.

Table 4-4. Impacts of CSO Control Technologies.

Issue	CSO Control Technology		
	Separation	**Onsite Treatment**	**Storage**
Permitting	Construction-related permits Other project specific permits Stormwater NPDES[a]	Construction-related permits Shorelines Permit Other project specific permits	Construction-related permits Other project specific permits
Site/Easement Acquisition	Street Right of Way	Moderate to significant effort depending on project	Moderate to significant effort depending on project
Flexibility	Does not preclude additional CSO control projects	Project specific - may have flexibility to enhance within original site	Limited ability to expand original structure on original site
Public Health & Safety	Minor construction-related impacts	Minor - related to onsite chemical storage	Minor construction -related
	Beneficial impact due to CSO reduction		
Environmental Impacts	Minor construction related impacts; Stormwater discharge	Disturbance to marine environments during outfall construction	Minor construction -related
	Beneficial impact due to CSO reduction		
Social Impacts	Traffic during construction - Public access	Potential noise and odor Potential fairness and equity issues	Potential traffic during construction Potential odor Potential fairness and equity issues
	Beneficial impact due to CSO reduction		
Relative Cost	High	Medium	High

a National Pollutant Discharge Elimination System

ALTERNATIVES DEVELOPMENT

The current Ecology requirements for CSO control (WAC 173-245-020(22)) call for the reduction of untreated discharge events to a frequency of once per year on average at every CSO location. Control may be achieved by flow reduction (e.g. stormwater separation), storage to hold overflow volumes and bleed them back into the system for delivery to the West Point treatment plant as capacity becomes available after storms, or by providing the equivalent of primary treatment at the CSO locations (onsite treatment). Primary treatment is defined in the WAC as 50 percent reduction of total suspended solids (TSS) and a discharge of a settleable solids concentration less than 0.3 mL/L. The primary treatment performance standards are subject to averaging over a specified time interval.

Work during the 1988 CSO Control Plan development indicated that control of overflows predicted by the hydraulic model for the specific storm known as Design Storm 6 would result in a long-term average of one untreated discharge per year. Accordingly, alternatives formulated to control the overflows from this storm include storage or a combination of storage and partial separation of the overflow volume predicted from this storm, or the equivalent of primary treatment with sizing criteria based on the peak rate of overflow from this storm. The treatment alternatives include some storage associated with the treatment tanks; this volume would be returned to West Point following storms and thereby slightly reduce the annual overflow volume.

During the planning work, the US EPA issued the federal CSO policy that calls for control to four to six untreated overflows per year (presumptive approach) rather than the once per year level specified by Ecology. The following sections include the volumes and peak overflow rates for Storm #5 (4 per year event) as well as Storm #6 (once per year event). Estimates of the size and cost reductions available by controlling to the federal standard can be made from these data using the method described in a previous section.

DUWAMISH CSO CONTROL ALTERNATIVES

The Duwamish basin CSO locations include those along the Duwamish River and south Elliott Bay; Michigan, Brandon, Hanford, Hanford@Rainier, Lander, Connecticut and King. Modeling of the King County CSOs in the industrial area from King Street south to Michigan Street indicates that overflows from this area are about 727 million gallons (MG) per year in the estimated 1998 system condition with a West Point Treatment Plant peak flow set point of 400 million gallons per day (mgd). This is about 20 MG per year over the 440 mgd set point. Table 4-5 shows the overflow volumes for the 400 mgd set point at each regulator station for the 1998 baseline and the Design Storms #5 and #6. The impact of a reduced West Point flow is greatest at King Street which is closest to the Interbay pump station.

Table 4-5. Duwamish CSOs.

CSO	Annual 1998 Volume MG	Storm #5 1998 Volume MG	Storm #5 1998 Peak Rate mgd	Storm #6 1998 Volume MG	Storm #6 1998 Peak Rate mgd
Hanford	207	12.2	82	18.8	89
Hanford @ Rainier[a]	7	NA	NA	0.6	16
Lander	164	8.7	41	15.2	55
Connecticut	93	4.8	59.5	9.2	55.1
King	33	2	17	2.2	24.2
Michigan	173	8.9	49	13.1	75.1
Brandon	57	3	18	4.5	25.1
Total	734	40		64	

[a] Includes overflows at Bayview North, Bayview South, and S. Hanford St. at Rainier Avenue which overflow to the storm drain leaving the system at the site of the former Hanford #1 Regulator. Baseline overflows were included in Hanford value.

The alternatives that were evaluated for the Duwamish area include:

1. Storage for the entire Design Storm #6 overflow volume with return to the Elliott Bay Interceptor (EBI) after capacity becomes available.

2. A combination of partial separation of portions of the tributary areas with the addition of offline storage tanks for the remainder of the flow.

3. Treatment of CSO at each regulator station.

STORAGE IN THE DUWAMISH

This alternative would provide offline storage tanks to control CSOs from the industrial area regulator stations. Because the volume requirements associated with the 400 or 440 mgd peak flow set point at West Point are small, the tank sizes are taken to be the slightly higher values specific to the 400 mgd set point. The tanks sizes, locations, and total projects costs are shown in

Table 4-6. Locations are indicated on Figures 4-2, 4-3 and 4-4. Optimization would likely result in the King Street tank being combined with the Connecticut tank.

Table 4-6. Duwamish Area CSO Storage Facilities[a].

CSO Name	Offline Storage Volume, MG	Location	Project Cost, Millions	Unit Cost, $/gallon
King	2.2	Beneath parking area south of King Street and east of Occidental Avenue on the Kingdome site. Alternate combine with Connecticut	Storage $12.8 Conveyance $0.7 Total $13.5	0.46
Connecticut	9.5	On the Kingdome site beneath a parking area north of Royal Brougham	Storage $43.8 Conveyance $0.7 Total $44.5	0.48
Lander	15.2	Beneath parking area east of Airport Way between South Walker and South Hill Streets Alternate combine with Hanford	Storage $67.3 Conveyance $6.5 Total $73.8	0.45
Hanford	18.8	South of S Lander St. and east of Occidental Avenue S	Storage $69.6 Conveyance $16.5 Total $86.1	0.42
Hanford @ Rainier	0.6	Ball field adjacent to Rainier Avenue S. and S. Winthrop St. one block north of S. Hanford St..	Storage $2.7 Conveyance $0.2 Total $2.9	0.41
Brandon	4.5	South of South Brandon Street west of First Avenue South	Storage $23.6 Conveyance $0.7 Total $24.3	0.43
Michigan	13.1	North of South Michigan Street east of Fifth Avenue South	Storage $59.8 Conveyance $0.7 Total $60.5	0.35
Total	63.1		$306	0.42

[a] Assumes a West Point peak-flow set point at 400 mgd.

As shown in Figure 4-3, the Hanford@Rainier overflow is at the east end of the South Hanford Street tunnel. A site for a circular below grade tank was identified in a baseball field adjacent to Rainier Avenue South and South Winthrop Street one block north of South Hanford Street. An alternative is to provide pipe storage in Rainier Avenue from South Hanford Street to South Bayview Street connecting to the overflow Bayview South. An enlarged pipe solution would require less operational attendance and would not require use of the ballfield; however, the construction costs would be higher.

The larger offline storage tanks would be rectangular tanks with internal baffles so that entering flow would travel in a serpentine pattern through separate cells. The individual cells would have isolation baffles between them and have relatively large length to width ratios. Overflow from the tanks, when necessary during storm events exceeding Design Storm #6, would occur over weirs at the downstream end of the tanks. Thus, the tanks will function like primary sedimentation tanks during overflow and provide some degree of treatment.

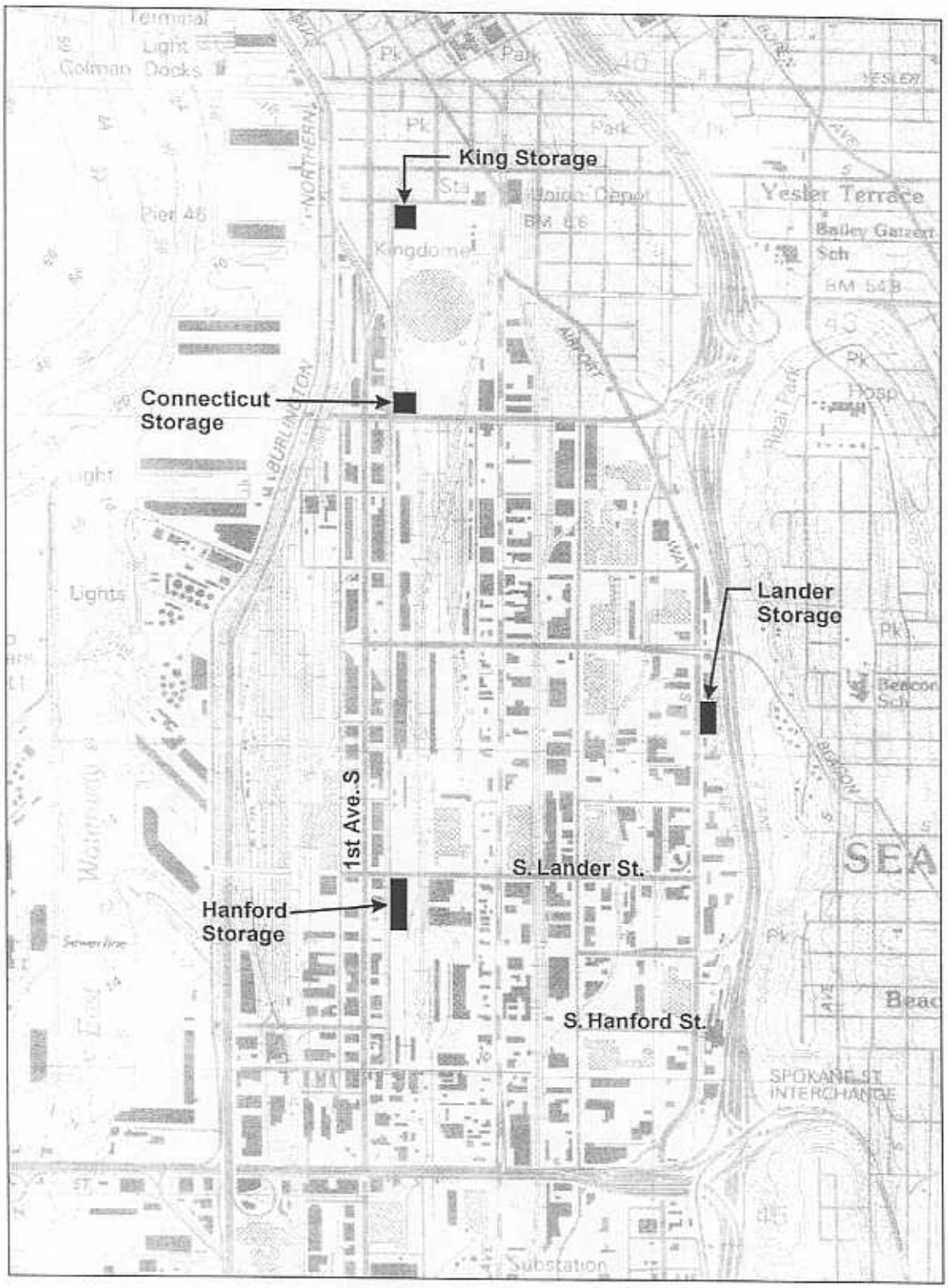

Figure 4-2. Kingdome - Industrial Area CSO Storage Sites.

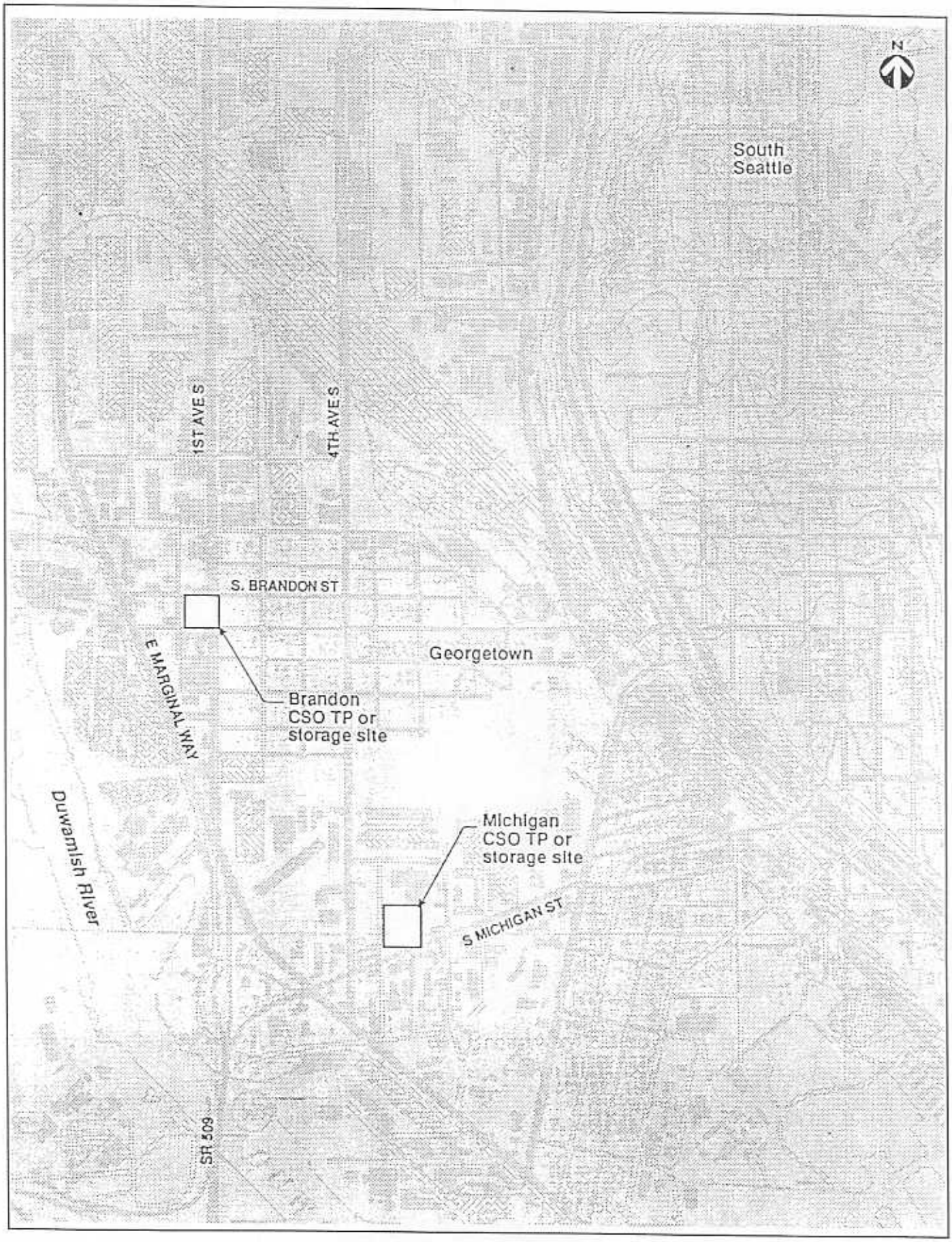

Figure 4-3. Conceptual Layout of Brandon and Michigan CSO Treatment or Storage Sites.

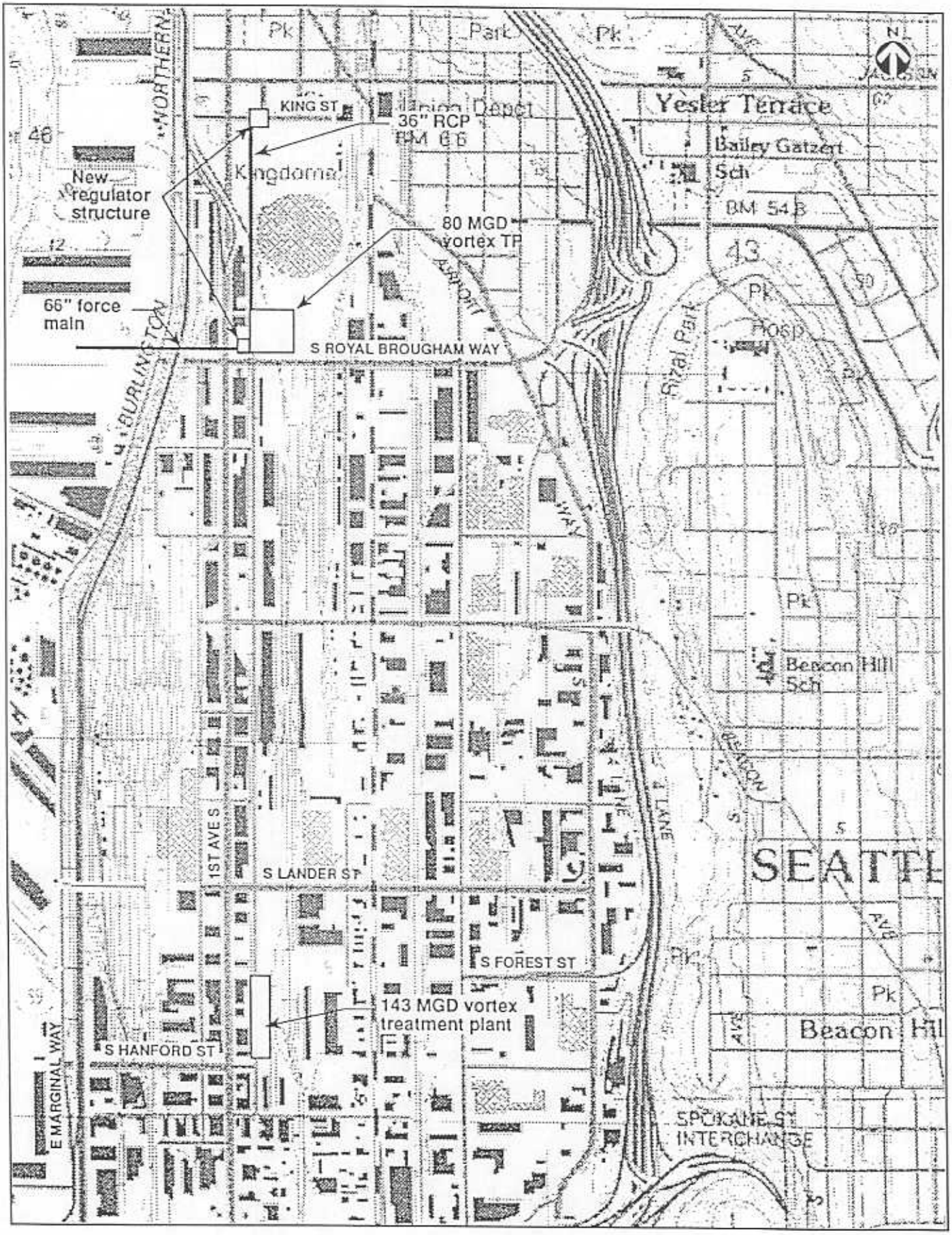

Figure 4-4. **Conceptual Layout of King/Connecticut and Hanford/Lander CSO Treatment or Storage Sites.**

All tanks are assumed to be below grade, allowing gravity flow into the tank. Tanks would be drained via pumps after storms subside and capacity is available in the system. In general, a drainage pump station capacity sufficient to drain the entire tank in 48 hours has been assumed for costing purposes. Each tank will require auxiliary equipment including a new regulator or flow control structure (weir) to divert overflow to the tank.

Installation of storage tanks in the Duwamish area could potentially increase overflows at Denny depending on how they are managed. If stored flow is returned to the EBI as rapidly as capacity is available in the interceptor, then the period of high flows at the Interbay pump station preventing inflow from Denny will be prolonged. If however, stored flows in the Duwamish are not released until storm flows have subsided throughout the system, then the impact on Denny will be negligible—the Duwamish tanks have been sized for this latter operating scenario during Storm #6. The necessary operating strategy and final tank sizing will need to be finalized by King County in final design studies using further modeling incorporating continuous rainfall series.

SEPARATION AND STORAGE IN THE DUWAMISH AREA

Pre-designs and designs have been completed by King County for projects involving partial separation and supplemental offline storage in the Michigan, Brandon, and Connecticut regulator tributary areas. These projects are designed to eliminate CSOs at these regulators for Design Storm No. #6. With these separation and storage projects, it would still be necessary to add controls at the Hanford and Lander regulators (King Street control is assumed to be associated with Connecticut storage by conveyance of King overflows to the Connecticut tank). These projects would reduce the overflow volume at the Denny Regulator somewhat. Separation control for the Hanford and Lander tributary areas is not included in these projects. Most of the tributary area to Hanford east of the freeway has already been separated. Because of the flows from the Rainier Valley that enter the Hanford/Lander system, separation of the Hanford area west of the freeway would not eliminate the remaining Hanford overflow, although it would be reduced.

Table 4-7 presents the industrial area separation and supplemental storage projects that will reduce CSOs in the Duwamish area. Shown are the areas separated or partially separated, the required storage volume that is necessary to supplement separation and the total project cost for each project. Locations and details are contained in the King County predesign documents. In the Task 5 report, onsite treatment of the remaining Hanford and Lander flows has been included as a representative project to complete controls in the Duwamish area. Alternatively, a 33 MG storage tank could be provided to store Hanford/Lander flows. The size of the required tank could be reduced if the design goal were to limit discharge frequency to 4-5 times per year.

Table 4-7. Industrial Area Separation/Storage Projects.

CSO Name	Area Separated Acres	Storage Volume MG	Project Cost Million[a]	Unit Cost $/Gallon
Michigan	70% of 238 acres[b]	5.5	$30.7	0.18
Brandon	70% of 52 acres[b]	3.0	$13.8	0.24
Connecticut/King[c,d]	100% of 128.5 acres	8.5	$28.0	0.22
Total	418.5 acres	17	$72.5	0.20

a These costs have been inflated from the predesigns to an ENR/CCI of 5630.
b Percentage of total impervious area that will be separated
c King Regulator control included in cost and volume at Connecticut.
d Assumes West Point at 400 mgd.

ONSITE CSO TREATMENT

Two sets of alternatives were investigated for onsite CSO treatment in the Duwamish area to contrast vortex separators and high rate rectangular storage/sedimentation tanks. The first group of facilities based on vortex separators were developed for Michigan Street, a shared facility at King and Connecticut, and a shared facility at Hanford #2 and Lander. For inclusion in the Task 5 control groups, partial separation of a portion of the Brandon area (52 acres) is included together with an associated storage tank. The treatment facilities have been sized according to the criteria presented earlier. The vortex units would be constructed below grade. The units are assumed to have diameters of 35 to 40 feet, with a water depth equal to the diameter.

The second group of facilities consists of rectangular storage/sedimentation tank facilities at the Brandon CSO, in addition to the other locations listed for the first group. The facilities would consist of rectangular primary sedimentation tanks constructed with the top of the walls about 7 feet above grade. The tanks would be furnished with aluminum covers and odor control equipment. An allowance of 5 to 10 percent was added to the construction cost estimate to provide for mitigation of above grade facilities. The tanks are assumed to be loaded at a peak hydraulic rate of 4,000 gpd/square foot, or between 2.5 and 3.0 gpm/square foot. These tanks are assumed to have a 15-foot water depth and sludge would accumulate in the tanks until clean up after the storm. As described above, little if any suspended or settleable solids removal is expected to occur at these peak rates. As is the case for the vortex separators, the degree to which the requirements for solids removal are met will depend on the average rate at which the units operate over an annual cycle. If average rates are significantly below the peak design rates most of the time, then treatment standards could be met. It is also possible that chemical addition and mechanical enhancement (e.g., dissolved air flotation) may be required to ensure that effluent requirements are met consistently, or if water quality conditions require it.

To further reduce the cost of these alternatives, it is assumed that the existing outfalls will be used for discharge. Disinfection with sodium hypochlorite with subsequent dechlorination is also assumed at each installation.

These onsite CSO treatment alternatives will require that operations and maintenance costs and the effort to monitor the unit performance be reduced. Otherwise, these costs may increase the life cycle costs above that of centralized treatment. To be most viable, these alternatives should meet the following assumptions:

- Stakeholders must agree to the use of the existing outfalls.
- Monitoring requirements by Ecology should be relaxed (presumably after some period of familiarization) so that all units need not be monitored for performance in each storm. It is assumed that monitoring efforts would be rotated among the units.
- It is assumed that the treatment units will not require continuous attendance during storm events. This is typical of CSO storage/treatment installations elsewhere. With this assumption, the units could be added to the duties of King County's field crews for a daily visit.

A system map illustrating the locations of these facilities is shown in Figures 4-3 and 4-4. Facility costs are shown in Table 4-8 and 4-9. It should be noted that because the primary sedimentation tanks are above grade and of significantly less liquid depth than the vortex separators, the construction costs are lower even though the surface areas are greater. The resulting difference in excavation costs is significant enough to lower the cost of the primary sedimentation tanks alternative relative to the vortex separator facilities.

Table 4-8. Duwamish Onsite Treatment: Alternative 1—Vortex Separators.

CSO Name	1998 Annual CSO MG	Storm #6 Volume MG	Project Cost Millions	Unit Cost $/gallon	Control Type
Michigan	173	13.1	$44	0.25	Vortex treatment
Brandon	57	4.5	$14	0.25	Separation/ Storage
Hanford #2	207	18.8	$46	0.22	Vortex treatment
Lander #1[a]	164	15.2	$31	0.19	Vortex treatment
Connecticut	93	9.2	$45	0.38	Vortex treatment
King[a]	33	2.2	$3		Convey to Connecticut
Totals	734	63	$183	0.25	

[a] Hanford and Lander, and Connecticut and King would be combined into single facilities. Costs shown are proportionate share.
Note: Because these facilities are dependent on peak flow rate and not volume, cost and size are independent of the West Point peak flow set point.

Table 4-9. Duwamish Onsite Treatment: Alternative 2—Rectangular Storage/ Sedimentation Facilities.

CSO Location	1998 Annual CSO MG	Storm #6 Volume MG	Project Cost Millions	Unit Cost $/gallon	Control Type
Michigan	173	13.1	$29	0.17	Primary Sed. Treatment (2.1 MG)
Brandon	57	4.5	$12	0.21	Primary Sed. Treatment (0.7 MG)
Hanford #2[a]	207	18.8	$25	0.12	Primary Sed. Treatment (3.3 MG)
Lander #1[a]	164	15.2	$23	0.14	Primary Sed. Treatment (1.5 MG)
Connecticut	93	9.2	$28	0.30	Primary Sed. Treatment (2.1 MG)
King[a]	33	2.2	$3	0.09	Convey to Connecticut
Totals	734	111	$120	0.16	

[a] Hanford and Lander, and Connecticut and King would be combined into single facilities. Cost shown are proportionate share.
Note: Because these facilities are dependent on peak flow rate and not volume, cost and size are independent of the West Point peak flow set point.

Local Onsite CSO Treatment Siting Issues

CSO treatment facilities for Michigan, Brandon, Hanford/Lander, and Connecticut/King CSOs can be built above or below ground. Above or near grade construction reduces cost due to lower excavation volumes and the lack of a concrete cover. For the Hanford/Lander facility treating 145 mgd for example, the difference between below and above grade (top of tank walls 7 feet above grade) construction is about $10-12 million in the size range considered (see Appendix A for figure) out of a total capital cost of $50-60 million. Sites identified are generally in parking areas surrounded by mixed commercial/industrial land use. Some of the surrounding developments are relatively new.

The Connecticut/King facility has been tentatively located at the intersection of First Avenue South and South Royal Brougham Way. It could be in Kingdome parking areas on the north or south side of Royal Brougham. If a new stadium is constructed in the vicinity of the Kingdome, this facility could be placed beneath it. Mitigation needs to be considered for above ground facilities. King County has examined mitigation (all aspects including landscaping, 1 percent for arts, and in some cases odor control) and found it to vary from about 4 percent to about 10 percent of construction costs. Accordingly, mitigation costs will be added to above grade facilities at 10 percent for residential and sensitive areas, and 5 percent for commercial/industrial areas. This is carried in the cost estimates under a line item for 'landscaping.' Odor control is a separate line item.

FLOW TRANSFER TO EDRP AT RENTON (SOUTHERN TRANSFER)

The RWSP examined an alternative that transferred the southern portion of the West Point Service area to the EDRP (WW2020 Alternatives A3 and A4). This would involve a new pump station in the vicinity of the existing Duwamish pump station and a new forcemain back to the EDRP. Flows up to 2.25 times AWWF at the Duwamish pump station would be pumped to the EDRP with any remaining wet weather flows continuing north to West Point in the EBI. The EBI would continue to receive flows transferred from Alki. The Task 5 report included a CSO Group 4 to correspond to this RWSP Southern Service Area Transfer alternative.

With the transfer of flows, significant capacity would be available in the EBI to accept flows from the regulator stations north of the Duwamish pump station. The most significant effects would be at the Hanford, Lander, Connecticut, and King regulators that are closest to the Duwamish pump station. After the transfer, the overflows at these stations in Storm #6 would be reduced 80 percent as shown in Table 4-10.

Table 4-10. Reduction in Overflows due to Southern Area Transfer to EDRP.

CSO Name	Storm #6 Overflow before SSA Transfer, MG	Storm #6 Overflow after SSA Transfer, MG
Hanford + Lander	34.0	6.5
Connecticut + King	11.4	2.5
Total	45.4	9.0

CSO control at these locations could be achieved by treatment or storage. Because the peak rate of overflow would not be reduced, CSO treatment alternatives would be identical to those discussed above. The substantial reduction in overflow volume and expected discharge frequency would make storage a feasible solution as the storage volumes necessary are not very much greater than the volumes necessary for treatment, and selection of a storage solution would eliminate the monitoring activities associated with treatment. Thus, the Task 5 report selected storage for these CSOs with the costs and volumes shown in Table 4-11. If the Southern Service Area Transfer were implemented, the cost to control CSOs at these locations with storage would be $29 million less than the cost for CSO treatment. If the transfer costs were considered to be a CSO cost, however, the total costs would be greater than for CSO treatment.

Table 4-11. Facility Costs Associated with Flow Transfer to EDRP at Renton.

CSO Name	Storage Volume, MG	Project Cost, Millions	Unit Cost, $/gallon
Hanford/Lander	6.5	$32	0.09
Connecticut/King	2.5	$18	0.14
Pump Station and Forcemain to EDRP[a]	–	$64	–
Totals[b]	9.0	$50	–

[a] Cost from WW2020+ alternative A3 development
[b] Does not include transfer line and pump station - WW2020 cost

The Hanford/Lander tank would be located on the intertie between the Hanford and Lander Regulators to handle overflows associated with those two locations. Similarly, an additional tank would be situated to store overflow volumes originating at the Connecticut and King Street CSOs. This facility would be located in the vicinity of the Kingdome. Tank locations are the same as shown in Figure 4-4.

Michigan and Brandon overflows are not affected by the flow transfer from the Duwamish pump station. Additional projects will be needed for those locations, which can be selected from those described above. The Task 5 report included the separation/storage alternatives for Michigan and Brandon in the grouping with this alternative. In addition, the Hanford@Rainier overflow is not affected by the transfer and a project selected from above will be required.

Because most of the EBI capacity will be consumed by inflows at Hanford, Lander, Connecticut, and King, only modest reductions in overflow volume would occur at Denny Way and there would be no reduction in the peak overflow rate. As a result, the Task 5 report included a full storage/treatment facility for Denny assuming no significant reduction due to the Southern Area Transfer.

DENNY/LAKE UNION CSO CONTROL ALTERNATIVES

As a part of the 1995 CSO Update project, concentrated analysis of alternatives for the Denny Way regulator and associated city of Seattle Lake Union CSOs was conducted. This effort was accelerated within the RWSP planning process to develop the further develop the project pursuant to obtaining grant funding for construction. The alternatives examined in that process are reported on in *Denny Regulator Accelerated CSO Control Program Report* issued in February 1995.

The project currently being proposed by King County to control overflows at the Denny Regulator is described in detail in the December 1996 Denny Way/Lake Union CSO Control Facility Plan, Preliminary Draft Report, (Denny Way Program Management Team, King County Water Pollution Control Division, Brown and Caldwell, and associated firms). The preliminary draft report presents a complete description of the control facilities and estimated project costs. It also describes the analyses that were performed for selecting the preferred project, determining the hydraulic design of the project components, and selecting a CSO treatment train.

The preliminary draft report is incorporated by reference as addressing the Denny/Lake Union CSO Control Alternative for this CSO Control Plan 5-Year Update. King County has since embarked on design of facilities generally as described in the above documents.

CENTRALIZED DUWAMISH AREA CSO TREATMENT

Solutions to the Elliott Bay CSOs can be developed by selecting from the alternatives described in the previous sections. In this section, alternatives are defined to provide centralized CSO treatment for the Duwamish CSOs, either in conjunction with or without a Duwamish secondary treatment plant. These alternatives were contained in the Task 5 report CSO Groups 3b and 3c. Location of a treatment plant in the Duwamish area would reduce the peak flows in the EBI, thereby also decreasing overflows at Denny Way.

ASSUMPTIONS

The treatment scenarios have been developed with certain assumptions about the West Seattle and Alki CSOs. In addition, assumptions have been made with respect to treatment facilities and effluent disposal. These assumptions are discussed below.

West Seattle and Alki CSOs

It is assumed that the Alki wet weather treatment plant will be placed in service. Flows up to 19 mgd (and possibly higher) will be diverted to the new Alki tunnel at the 63rd Avenue pump station. Flows in excess of the diversion will be treated and discharged at the Alki plant. In addition, it is assumed that overflows from the Harbor Avenue regulator will be diverted to the new West Seattle tunnel for storage by gravity. In addition, alternatives have been developed to divert all or a portion of the Chelan regulator overflows to the new tunnel by gravity. Based on the above considerations, it is assumed that 19 MG will be diverted from the West Seattle tunnel node to the EBI during the once-per-year CSO event. Based on this analysis, the Duwamish CSO treatment facilities are sized to accept the 19-mgd output from the West Seattle pump station.

CSO Treatment Facilities

The development of the CSO treatment alternatives has concentrated on use of the D9 site as identified in the 1988 Secondary Facilities Plan (Figure 4-5). This site, generally lying north of South Hudson Street and south of Diagonal Avenue between Colorado Avenue South and 1st Avenue South, was identified as the most likely available site based on a number of criteria.

The treatment alternatives for the Duwamish have been developed at this level only for rectangular sedimentation basins. Based on analysis discussed above, these more or less costly than vortex separators depending on the design surface overflow rate selected.

If there is a secondary treatment plant in the Duwamish, it is assumed that the CSO treatment facilities will be adjacent to it and that the facility will be attended 24 hours a day. Further, it has been assumed that, like Renton and West Point, the NPDES permit will not include separate limits for CSO treatment (the monthly limitations of 30/30 will apply to the combined effluent). With these assumptions, the CSO primary facilities have been sized for a maximum Design Storm #6 overflow rate of 2,500 gpd/square foot. Because it is associated with an operating secondary facility, the tanks are assumed to include scrapers for sludge removal. Because the secondary flows will be a smaller portion of the total peak flows at this facility than at West

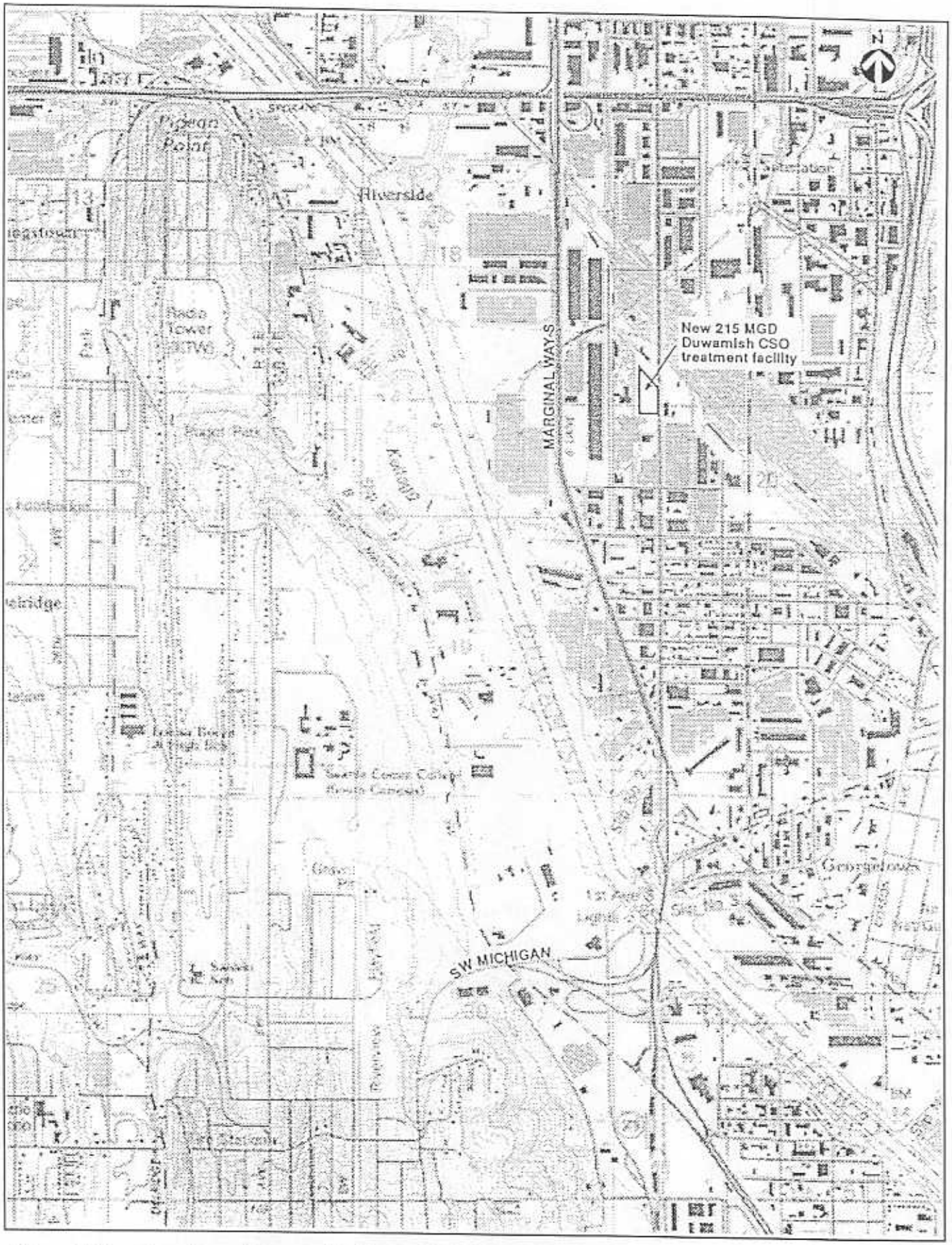

Figure 4-5. Location of Duwamish Centralized CSO Treatment Facility.

Point [average wet weather flows (AWWF) of 35 mgd vs. a peak of over 300 mgd at Duwamish compared to 133 mgd and 440 mgd at West Point], the maximum overflow rate allowed is not as large as at West Point. This assumption is made with the expected NPDES permit limit in mind.

For the case of only CSO treatment in the Duwamish area, it is expected that the permit will require 50 percent suspended-solids removal on an annual basis as at the Carkeek plant. In this case, the CSO primary treatment facilities are sized for a maximum overflow rate during Design Storm #6 of 2,000 gpd/square foot to provide more reliable performance. Because the volume of the treatment tanks is a small portion of the annual inflow, it will be more difficult to meet the 50 percent suspended solids removal requirement by mass accounting. It has also been assumed that the tanks will be deeper (15 feet rather than 12 feet) and will not contain sludge-removal scrapers. The tanks will be preceded by grit-removal equipment and will be designed with drainageways to assist removal of settled solids and fire monitors for wash-down. Cleanup efforts will be an issue to be examined in final design.

Effluent Disposal

It has been assumed that a new shallow (200-ft) outfall will be constructed for effluent disposal. This might be added to the ETS from the exiting stub at the Duwamish Head. In the event that a secondary treatment plant were constructed in the Duwamish, it is assumed that the outfall for that plant will be enlarged to accommodate centralized CSO flows.

CATAD Operations

Both the Duwamish treatment scenarios are complex in the controls needed to balance flows between the treatment facility and the EBI north of King Street. The delay times in the system are large which will make control difficult. A fully functional real time prediction model will be needed with links to Doppler radar rainfall predictions.

CSO TREATMENT IN CONJUNCTION WITH SECONDARY TREATMENT (TASK 5 GROUP 3B)

In this alternative, it is assumed that a secondary treatment plant with a 36 mgd AWWF capacity and an 80 mgd peak capacity will be built at the D9 site between Colorado and First Avenues South, south of South Alaska Street, taking flows from King Street south, including Alki flows. The capacity has been identified in the *Wastewater 2020 Plus* study (WW2020+ alternative D1). Flows from the south would be conveyed to this site by the existing Duwamish Pump Station. Flows from the north, including the Alki flows and base flows from Hanford, Lander, and King streets would be conveyed to the plant in a new dry-weather interceptor. Peak flows from Design Storm #6 that would arrive at the treatment plant have been estimated to be approximately 300 mgd including Alki transfers. Assuming up to 80 mgd through the secondary plant leaves 215 mgd peak flow for the associated CSO treatment facility.

CSO flows from the Michigan and Brandon Street regulators in excess of the EBI capacity would be conveyed to the plant site in a new 84-inch diameter conduit.

CSO flows from the Hanford No. 2, Lander No. 2, and Connecticut regulators would be conveyed to the treatment plant site by reversing flow in the existing EBI. King Street CSO flows and a portion of Connecticut flows will be conveyed north to West Point. It has been assumed that the construction of a dry weather conduit to intercept up to 2.25 times AWWF at the Hanford, Lander, and Connecticut regulators will be done as part of the secondary treatment plant construction. Analysis with EXTRAN indicates a 3 MG overflow remaining at the Connecticut regulator if the EBI is blocked at King Street. This excess overflow will be conveyed to West Point by installing a 96-inch diameter butterfly control gate in the EBI south of King Street.

To minimize the facilities at Denny Way, it has been assumed that the West Point set point is 440 mgd rather than 400 for this alternative. This eliminates facilities identified for storage/treatment at the Elliott West site, but does not accommodate potential reductions in Interbay pumping rate.

Specific elements included in this alternative include:

1. 96-inch diameter butterfly valve in the EBI south of King Street regulator.

2. 1,500 feet of 84-inch RCP from the Duwamish pump station to the treatment site.

3. 1,500 feet of 96-inch RCP with reverse-flow control structure to convey reversed flow from the EBI to the treatment site.

4. 1,800 feet of 84-inch RCP from the Brandon Street regulator to the treatment site.

5. 3,800 feet of 84-inch RCP from the Michigan Street regulator to the treatment site.

6. At the treatment plant site, CSO facilities will include:

   - 200 mgd influent pump station (the remainder is pumped by the existing Duwamish pump station).
   - 215 mgd effluent pump station (the remainder of the 300 mgd peak is considered a secondary treatment cost).
   - 215 mgd CSO treatment facilities consisting of standard primary sedimentation tanks with a maximum Design Storm #6 overflow rate of 2,500 gpd/square foot. Primary treatment for the remainder of the 300 mgd peak flow is considered a secondary treatment cost.

7. 12,000 feet of 102-inch effluent outfall. The cost includes only an increment to enlarge the 60-inch secondary outfall to 102-inch.

8. Increase size of diversion conduits and gates at the Hanford No. 2, Lander No. 2, Connecticut, King Street, and Denny regulators to eliminate restrictions and permit maximum utilization of interceptor capacity.

With the above facilities, and assuming a West Point peak flow set point of 440 mgd, it is estimated that the treatment facilities previously identified for the Denny project can be eliminated. Storage and conveyance facilities will still be needed. It is estimated that the following facilities will be needed at Denny. (Note that these alternatives were developed before optimization in subsequent Denny Way facility planning.)

9. 6,700 feet of 18-foot diameter shallow tunnel from Westlake Avenue to Elliott Avenue beneath Mercer Street, a new regulator station at the junction with the EBI, and a drop shaft connecting the Central Trunk to the new tunnel in the vicinity of Broad Street to accept Dexter Avenue regulator overflows.

The total project costs associated with this treatment configuration are presented in Table 4-12. Construction of CSO treatment was provide in two stages in the Task 5 report to conform to staging of the secondary treatment alternative and phasing of CSO controls to achieve 75 percent by 2005.

Table 4-12. Costs for Duwamish CSO/Secondary Treatment Alternative.

Item	Total Project Cost, Million
CSO Conveyance Facilities in the Duwamish/Elliott Bay area	$30.3
CSO Facilities at Denny	$71.2
Secondary Treatment at Duwamish[a]	$300
CSO Treatment at Duwamish	162.6
Total Project Cost	$564

[a] Secondary treatment plant costs are taken from the 1988 Secondary Facilities Plan for the Point Wells plant (37 mgd AWWF) modified as noted in the King County North Creek Alternatives report and escalated to a current ENR-CCI of 5630.

The total annual CSO volume controlled by this configuration is 727 MG in the Duwamish and 556 MG at Denny, for a total of 1,283 MG per year. Thus, the unit cost for CSO control is $0.21 per gallon controlled (not including the secondary treatment cost). Significant further development will be required to finalize this alternative.

CSO TREATMENT ONLY AT DUWAMISH (TASK 5 GROUP 3C)

In this configuration, only CSO treatment facilities are located in the Duwamish area with normal flows proceeding to West Point. To size the facilities to reduce facilities at Denny, a scheme to control the flows in the EBI north of the Connecticut regulator was examined. This involved limiting the output of the Duwamish Pump Station to the EBI and installing a 96-inch butterfly control gate in the EBI south of King Street. The Duwamish pump station would begin pumping directly to the treatment facilities when the inflows reach about 40 mgd (about twice the AWWF). Simultaneously, flows from the West Seattle Pump Station would be diverted to the CSO treatment plant, and the 96-inch control gate would begin to close. Flows north of the valve would be controlled to eliminate King Street overflows in Design Storm #6 and the need for treatment facilities at Denny in Storm #6 (although conveyance and storage elements are required), and to reverse flows in the EBI south of the control valve to new CSO treatment

facilities. The Interbay pump station is assumed to deliver its maximum rate of 133 mgd. Thus, this scenario assumes a 440-mgd flow set point at West Point with associated increases in overflows along the North Interceptor. This configuration was tested with King County's hydraulic model. It was found that the operations would surcharge the EBI between the Duwamish pump station and the control valve significantly which could cause local flooding or damage to the EBI. Control of the system was also considered to be technically difficult. These considerations resulted in dropping this approach from further consideration.

The final alternative configuration developed conveys Hanford#2 and Lander CSO flows to the D9 treatment plant site in a new 96-inch conduit. Michigan and Brandon CSOs are conveyed to the site in a new 84-inch conduit. Duwamish pump station flows and Alki transfer flows would continue north in the EBI. In addition, storage or other controls will be needed for excess flows at Lander, Connecticut, and King streets. Because the EBI will still run full with this configuration, both storage and treatment facilities would be needed at Denny. These were sized for a West Point set point of 400 mgd to be consistent with other alternatives.

The specific elements included in the configuration are as follows:

1. Separation and storage project at Connecticut as described above.

2. 4.0-MG offline storage at Lander Street with a 2 mgd pump station to drain storage. The remainder of Lander overflows are conveyed to Hanford #2 in the cross tie between these systems, and thence to the CSO treatment site.

3. Conveyance of King CSOs to the Connecticut storage site and addition of 2.5 MG of storage.

4. 4,600-ft of 96-inch pipeline to convey Hanford#2 CSO flows to the treatment plant.

5. 1,800 feet of 84-inch RCP from the Brandon regulator to the treatment site.

6. 3,800 feet of 84-inch RCP from the Michigan Street regulator to the treatment site.

7. At the treatment plant site, CSO facilities will include:

    - 215 mgd influent and effluent pump stations
    - 215 mgd CSO treatment facilities consisting of modified rectangular sedimentation tanks with a maximum Design Storm #6 overflow rate of 2,000 gpd/square foot. Clean-up between storms will be facilitated by flushing equipment using Renton effluent.

8. 12,000 feet of 84-inch outfall for effluent disposal.

9. Increase size of diversion conduits and gates at the Hanford No. 2, Lander No. 2, Connecticut, King Street, and Denny regulators to eliminate restrictions and permit maximum utilization of interceptor capacity.

10. 6,700 feet of 18-ft. diameter shallow tunnel from Westlake Avenue to Elliott Avenue beneath Mercer Street, a new regulator station at the junction with the EBI, and a drop shaft connecting the Central Trunk to the new tunnel in the vicinity of Broad Street to accept Dexter Avenue regulator overflows.

11. To accommodate potential reductions in Interbay pump station flow for a 400 mgd set point at West Point, add a 70 mgd pump station and a 1,000-foot-long, 54-inch-diameter outfall. An 80 mgd above grade CSO treatment plant is provided for discharges.

The project costs associated with the Duwamish CSO treatment configuration are as shown in Table 4-13. Construction of the facilities were phased in the Task 5 report to meet 75 percent controls system wide by 2005.

Table 4-13. Costs for Duwamish CSO Treatment Alternative.

Item	Total Project Cost, Millions
CSO conveyance/storage facilities in the Duwamish/Elliott Bay area	$90
CSO facilities at Denny[a]	$119
CSO treatment at Duwamish	$212
Total Project Cost	$421

The total annual CSO volume controlled by this configuration is 727 MG in the Duwamish and 556 MG at Denny, for a total of 1,283 MG per year. Thus, the unit cost for CSO control for this configuration is $0.33 per gallon.

SOUTHERN SERVICE AREA DEEP TUNNEL STORAGE ALTERNATIVES

In this alternative, CSO storage is provided in large diameter deep tunnels. Near surface consolidation conduits and drop structures are required to deliver CSO flows to the deep tunnels. A pump station would be provided at the terminus of the tunnel to lift stored flows to the plant for treatment. Two configurations were developed as part of the RWSP process. A configuration focused on CSO control only, and a configuration combined with transfer of flows from the Northern Service Area to the Renton treatment plant (RWSP Service Strategy 4).

In the Elliott Bay CSO configuration, approximately 30,600 feet of 24-foot-diameter deep tunnel would be constructed from the intersection of 6th Avenue West at West Ewing Street south along 6th W., Elliott Avenue, and 1st Avenue S. to S. Lander Street. Inlet drop shafts would be provided near the regulator stations at Denny, King, Connecticut, and Lander, and at the 6th Avenue West terminus for overflows at 3rd Avenue West. In addition, an 18-foot diameter shallow tunnel would be provided from the south Lake Union area to Elliott Bay under Mercer Street. This shallow tunnel provides storage for the combined King County and city of Seattle flows from the Denny and Dexter tributary areas. Overflows from south of Lander Street (Michigan, Brandon and Hanford) would be conveyed in an 84-inch surface conduit to the terminus of the deep tunnel at S. Lander Street. Stored flows would be lifted to the North Interceptor for conveyance to West Point via a pump station at the 6th Avenue West access structure.

In the RWSP Service Strategy 4 configuration, deep tunnels extend from the Kenmore pump station south to the Duwamish pump station. The total system includes a section extending south from the Kenmore pump station to the vicinity of the Husky Stadium and a section extending from the vicinity of the Husky Stadium under Lake Union to the intersection of Westlake Avenue N and Nickerson Street. A 24-foot diameter section extends southward from that point to the Duwamish pump station via Westlake and 4th avenues. A 24-foot diameter section also would extend from the vicinity of the 3rd Avenue West and West Nickerson intersection to the main tunnel. In addition, the 18-foot diameter shallow Denny tunnel would be provided from the south Lake Union area to Elliott Bay under Mercer Street. Overflows from Michigan and Brandon would be conveyed to the Duwamish terminus in an 84-inch near surface conduit. A pump station at the 3rd Avenue West terminus would be used to both lift stored CSO flows to the North Interceptor for conveyance to West Point, and to transfer normal flows (in excess of the West Point base capacity) to a new pump station at the Duwamish terminus. The new Duwamish station would transfer base flows to the Renton Plant. The 24-foot diameter section together with the 18-foot diameter Denny tunnel provide CSO storage for the Denny and Duwamish overflows plus those from 3rd Avenue West. Drop shafts to the tunnel would be provided at 3rd Avenue West, from the Denny tunnel near Westlake, and the King, Connecticut, Lander and Hanford regulators.

Elements and costs of the two configurations are shown in Table 4-14. The annual 1998 King County CSO volume controlled by these projects is 1,263 MG/yr including 3rd Avenue West. The costs of the two configurations are comparable and within estimating accuracy.

Table 4-14. Southern Service Area Deep Tunnel Alternatives.

Configuration	CSOs Controlled	Project Element	Project Cost Millions	Unit cost $/MG
CSO	Michigan, Brandon, Hanford, Lander, King, Denny, Dexter, E. Lake Union, 3rd W.	Deep Tunnel[a,b] Denny Tunnel Michigan/Brandon Total	391 66 42 499	 0.40
RWSP Service Strategy 4	Michigan, Brandon, Hanford, Lander, King, Denny, Dexter, E. Lake Union, 3rd W.	Deep Tunnel[a] Denny Tunnel 3rd West Audit Drain Pump Station Michigan/Brandon Total	343 66 69 18 42 538	 0.43

[a] Includes drop structures at Lander, Connecticut, King and Denny, and access shafts at both ends.
[b] Includes drainage pump station.

SOUTH MAGNOLIA CSO CONTROL ALTERNATIVES

The South Magnolia overflow is at the foot of 32nd Avenue West. Flow recordings for the last several years indicate an average annual overflow volume of about 5.4 MG with a once per year event of 1.3 MG. King County's model has not yet been calibrated for this overflow. The control alternatives that have been evaluated for this CSO include storage and rooftop drainage separation. The estimated project costs for these two options are shown in Table 4-15.

Table 4-15. South Magnolia CSO Control Alternatives.

Alternative Type	1998 Annual CSO Volume, MG	Project Cost Millions	Unit cost $/gallon
Storage	5	$6.0	1.20
Rooftop Separation	5	$2.9	0.58

STORAGE ALTERNATIVE

The storage alternative would involve construction of a 1.3 MG tank. Existing flows would be intercepted by a new diversion structure, located in 32nd Avenue West, and would flow by gravity into the underground tank. The tank would also empty by gravity via a 350-foot gravity sewer into an existing manhole on 32nd Avenue West as shown in Figure 4-6. A HYDROBRAKE would be installed in the sewer to limit flows to the capacity of the lines along the beach to the Interbay pump station and force excess flow into storage.

The site identified for the South Magnolia storage tank is a triangular parking lot to the south of the W. McGraw Street commercial area. The site is surrounded by commercial uses on the north and east, and by residential areas on the south and west. A tank could be located nearer the water but construction traffic and homeowner access in the ravine will likely generate significant opposition. A conveyance solution would involve construction of a new pipeline along the beach underneath the Magnolia Bluff in an area where Metro has had significant problems with the existing pipeline. This tributary area has been partially separated which presents the option of a roof drainage removal program.

ROOFTOP SEPARATION ALTERNATIVE

The separation alternative would involve the reduction of impervious surface area tributary to the overflow by the disconnection of rooftop drainage from 900 residences in the tributary area. Rooftop runoff would be redirected to the streets where catch basins would intercept the flow. The estimated construction cost per rooftop disconnect, based on recent city of Tacoma experience is $1,400, which is marked up to a project cost of $3,200 per unit (*Pacific NW Pollution Control Association Conference, Eugene, Oregon, 1995*).

The cost identified for this alternative assumes installation of piping to collect all downspouts and divert flow to the adjacent street. In specific circumstances, less piping may be required if flows can be diverted to rock pockets on the property. It also possible that a volunteer program similar to that in Portland, Oregon would reduce cost. A further alternative is an ordinance like that in Alameda, California requiring roof drain disconnection and side sewer rehabilitation when the building is sold. This alternative would extend the schedule of control, but would minimize

cost to King County. These approaches are discussed further in the final section of this report.

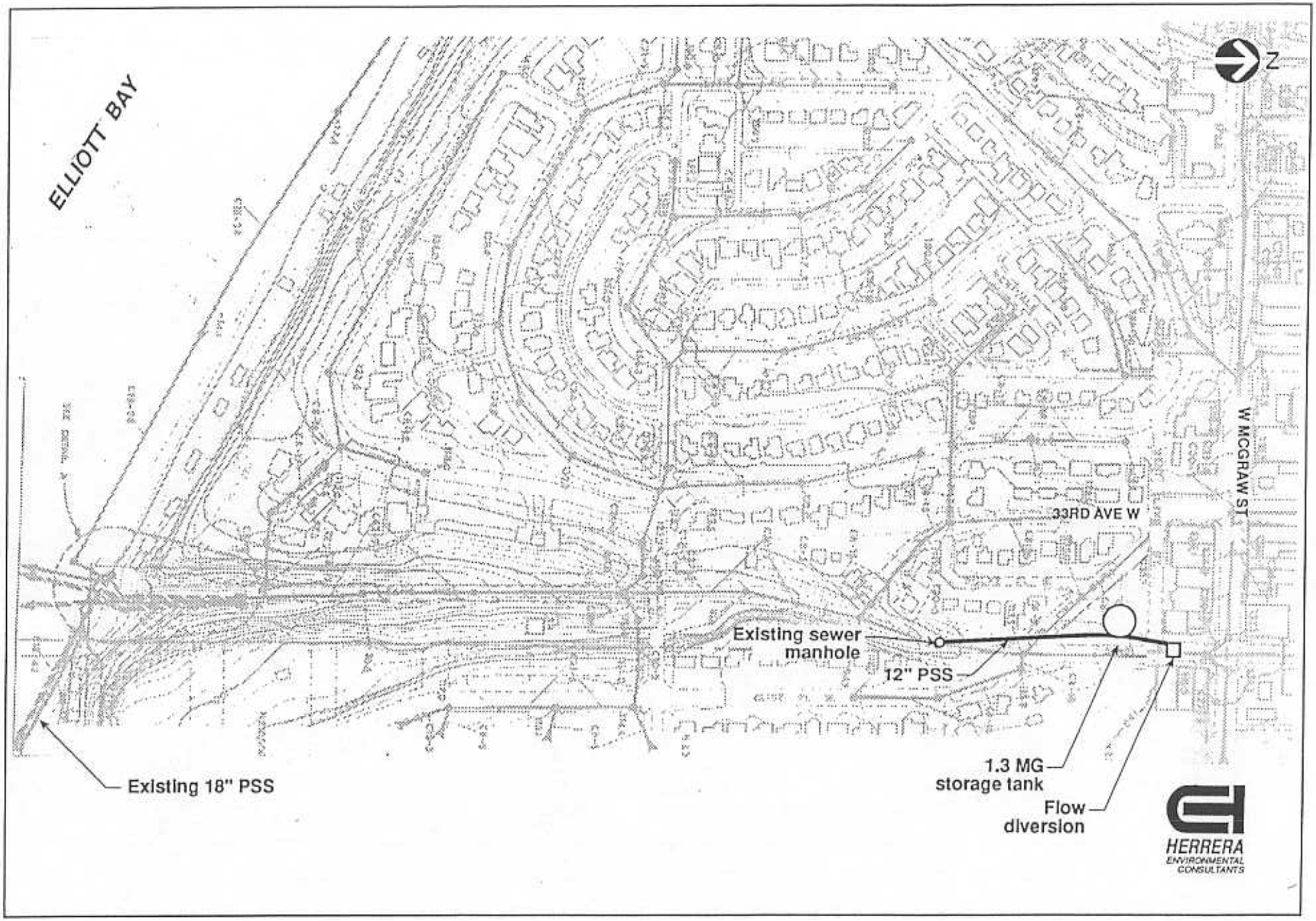

Figure 4-6. Conceptual Layout of South Magnolia CSO Control Storage Alternative.

NORTH INTERCEPTOR BASIN

The North Interceptor Basin includes the University, Montlake, Ballard, and Dexter regulators, as well as the 3rd Avenue West and 11th Avenue NW overflow structures. Control of overflows from the Dexter regulator have been included in the storage/conveyance/treatment alternatives developed for the Denny regulator. In the event that the partial separation alternative were selected for Denny, the Dexter regulator would need additional controls. CSO conditions are shown in Table 4-16.

Table 4-16. Existing North Interceptor CSO Conditions.

CSO	Annual 1998 Volume MG [a]	Storm #5 1998 Volume MG	Storm #6 1998 Volume MG	Storm #6 1998 peak rate mgd [a]
University	58	2.6	6.6	129
Montlake	4	0	0.8	24
Dexter	15	0	0.5	17
3rd Avenue West	51	3.9	5.5	37
Ballard regulator	4	0.1	0.4	6
11th Avenue NW	18	1.2	1.7	20
Seattle 150/152[b]	6	NA	0.6	12
Total	156	7.8	16.1	

[a] For West Point at 440 mgd set point.
[b] City of Seattle CSOs upstream of the Ballard regulator.

The CSO control alternatives developed for the North Interceptor basin include:

- Deep tunnel storage
- Near surface storage tanks
- CSO treatment
- Partial separation.

Partial separation is shown to be far more costly than the other approaches. The alternatives and costs are summarized in Table 4-17.

DEEP TUNNEL STORAGE FOR UNIVERSITY, MONTLAKE AND 3RD AVENUE WEST

In this alternative, overflows originating from the University, Montlake, and 3rd Avenue W CSOs would be intercepted and stored in a deep storage tunnel. The tunnel would stretch 15,800 feet from the open-space area south of Husky Stadium to the 6th Avenue West street end at West Ewing Street along North 34th Street as shown in Figure 4-7. Large access shafts would be required at both ends of the ends of the tunnel, and a drop shaft would be located at the 3rd Avenue W CSO. University overflows would be conveyed to the Husky Stadium shaft in 1,400-ft of 96-inch conduit laid in NE Pacific St., or via a 110-mgd pump station at the site of the existing University regulator and a 60-inch forcemain. Montlake overflows would be conveyed to the Husky Stadium shaft via a new 48-inch inverted siphon under the Montlake Cut.

Table 4-17. Summary of North Interceptor CSO Alternatives.

CSO Location	RWSP configuration[a]	Project Cost, $million				
		Deep Tunnel Storage[b]	Storage Tanks	CSO Treatment[c]	Partial Separation[d]	Potential Refinement[e]
University Montlake	No new Lake Line	Included in 3rd W	47.6			--[f]
	New Lake Line	Included in 3rd W	67.6	53.1	302	
3rd Avenue W	No new Lake Line	113.3	25.1			10-16
	New Lake Line	130.8	32.4	12.8		
11th Avenue NW	No new Lake Line		10.2			
	New Lake Line		11.5	8.9		4.2
Ballard[g]			6.4		138	

[a] Sizing depends on transfer of additional flow to West Point via a new lake line or parallel conveyance. With a new lake line, West Point is expanded to a wet weather average capacity of 159 mgd.
[b] Deep tunnel developed only for the University to 3rd Avenue W corridor.
[c] CSO treatment sized to allow for the construction of a new lake line. Some reduction in cost may be available if West Point is maintained at its current capacity.
[d] Partial separation costs for entire remaining combined service areas to minimize storage requirement. Costs would not depend on RWSP configuration.
[e] With certain assumptions, lower cost options were identified. See text for descriptions.
[f] Distributed storage and roof drainage removal should be considered. Cost impact not estimated.
[g] Ballard sizing does not depend on RWSP configuration.

To complete controls in the North Interceptor Basin, this alternative would also require controls at the Ballard regulator and 11th Avenue NW CSO selected from projects described below. In the Task 5 report, storage tanks were selected for these locations in CSO Group 2.

The volume required for control of these CSOs depends on the West Point peak flow set point, and on whether a new lake line is constructed to bring additional flows to West Point from the Northern Service Area. In alternative development for the North Interceptor Basin, it has been assumed that the West Point peak flow set point is 440 mgd—the worst case for these CSOs. If a new lake line is constructed to increase West Point capacity from 133 mgd to 159 mgd, overflow volumes would increase as shown in Table 4-18 (the Ballard regulator overflows are unaffected).

Table 4-18. Increase in CSO Volumes due to New Lake Line.

CSO Location	Storm #6 overflow without new lake line, MG	Storm #6 overflow with a new lake line, MG
University Montlake Total	6.6 0.8 7.5	12
3rd Avenue W	5.5	7
11th Avenue NW	1.7	2
Total	14.7	21

For the existing condition (no new lake line), a 12-ft diameter deep tunnel would suffice for storage of University, Montlake, and 3rd Avenue W overflows. In the event that a new lake line were constructed (Task 5 report Group 2b alternative) to convey flow from north of Lake

Washington to West Point, the required tunnel diameter would increase to 14 feet. Project costs for the two configurations are shown in Table 4-19.

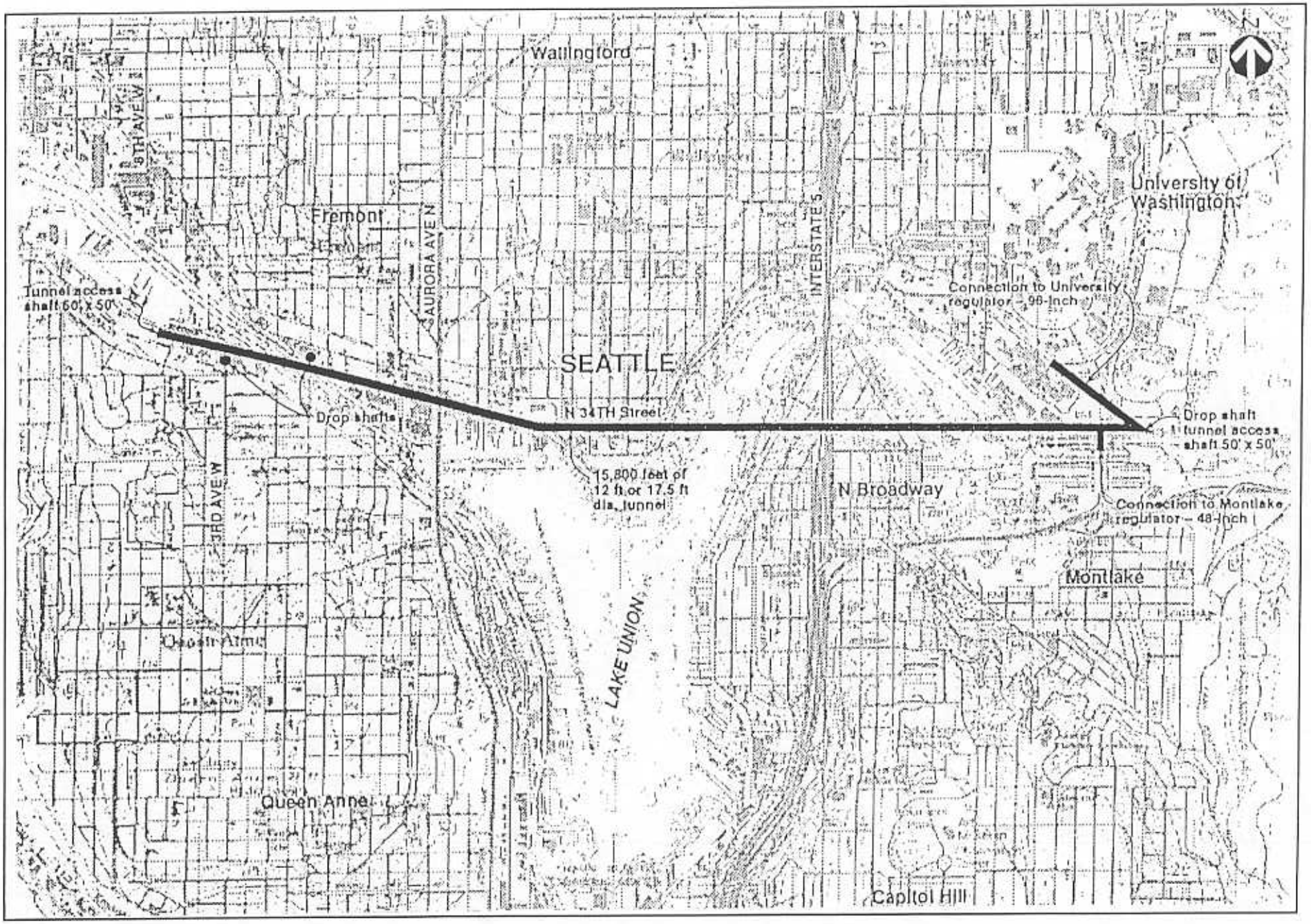

Figure 4-7. Conceptual Layout of University Regulator to 6th Avenue West Deep Tunnel CSO Control Alternative.

Table 4-19. Project Costs for University, Montlake, 3rd Avenue W Deep Tunnel Storage.

RWSP Configuration	Conveyance cost[a] $millions	Deep tunnel cost $millions	Total cost $millions	Unit cost $/gallon
Existing, no new lake line, West Point @ 133 mgd	12.5	100.7	113.3	1.00
New lake line, West Point @ 159 mgd	14.4	116.4	130.8	1.16

[a] Includes all near surface conduits, etc. to convey overflows to tunnel shafts.

The deep tunnel option would require a small (50-ft square) entry at the University side to remove the tunneling machine. Dirt could be removed from the 6th Avenue W end and barged to final disposal. This alternative is more costly than other approaches. It may be preferred, however, if the difficulty of siting a large storage tank in the University/Montlake area is excessive.

STORAGE TANK ALTERNATIVES

Storage tanks for each of the North Interceptor CSO locations were developed as summarized in Table 4-20. The individual tanks are discussed in the following paragraphs. Locations of the facilities are shown in Figures 4-8 through 4-11.

Table 4-20. Summary Descriptions of North Interceptor Storage Tank Alternatives.

CSO Location	Description
University Montlake	One to 6 tanks with total volume of 7.5 or 12 MG dependent on new lake line
3rd Avenue W	5.5 or 7.0 MG tank beneath the extension of W. Ewing St. east of 3rd Avenue adjacent to Ship Canal—possible Burke Gilman Trail extension. Increase diversion to Denny Way CSO control facilities to reduce storage requirements at 3rd Avenue W.
11th Avenue NW	1.7 or 2.0 MG Tank beneath segment of NW 45th St. or adjacent private property.
Ballard	A combined city of Seattle-King County facility. 1.0 MG Tank at community open space east side of Shilshole Avenue (possible Burke Gilman Trail extension). King County portion of volume is 0.4 MG.

University and Montlake

Six potential sites were examined for locating storage or treatment facilities as shown in Figure 4-8. These include the parking lot south of the Husky stadium (site 3), two sites on the Montlake parking lot or intramural fields north of the Intramural Building (sites 1 and 2), University parking area E2 at the intersection of Montlake Boulevard and NE 45th Street (site 4), a site beneath a possible extension of Ravenna Creek adjacent to the University Village shopping center (site 5), and a site associated with re-development of the University's south west campus plan known as the Portage Vista extending southwest from the new Physics Building at NE Pacific Street and 15th Avenue NE (site 6). Further discussion of environmental issues with these tanks is contained in the Task 5 report. The available volumes and costs associated with these sites are given in Table 4-21. Some combination of these sites will be chosen to provide

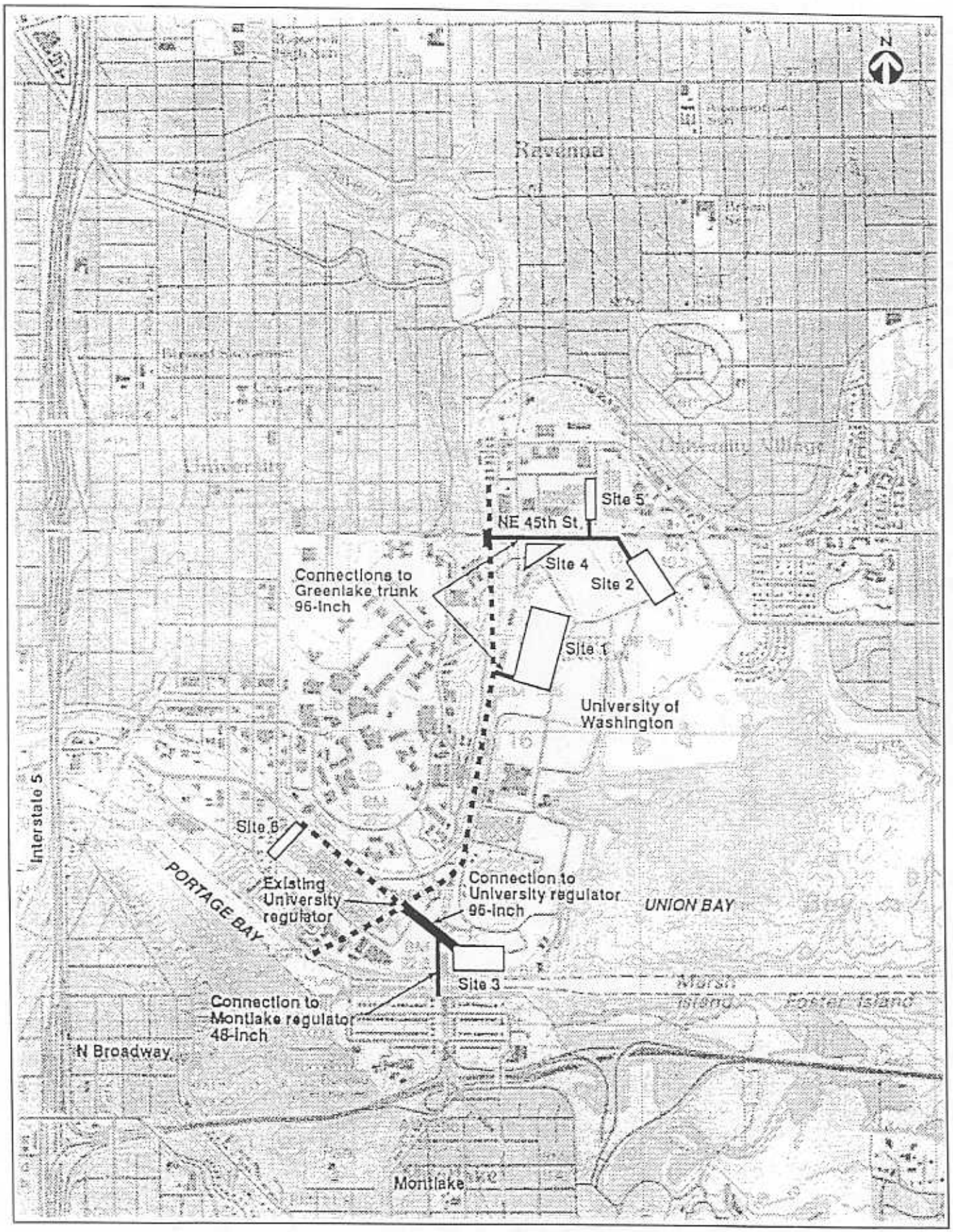

Figure 4-8. University and Montlake Area Alternative Storage Tank Sites.

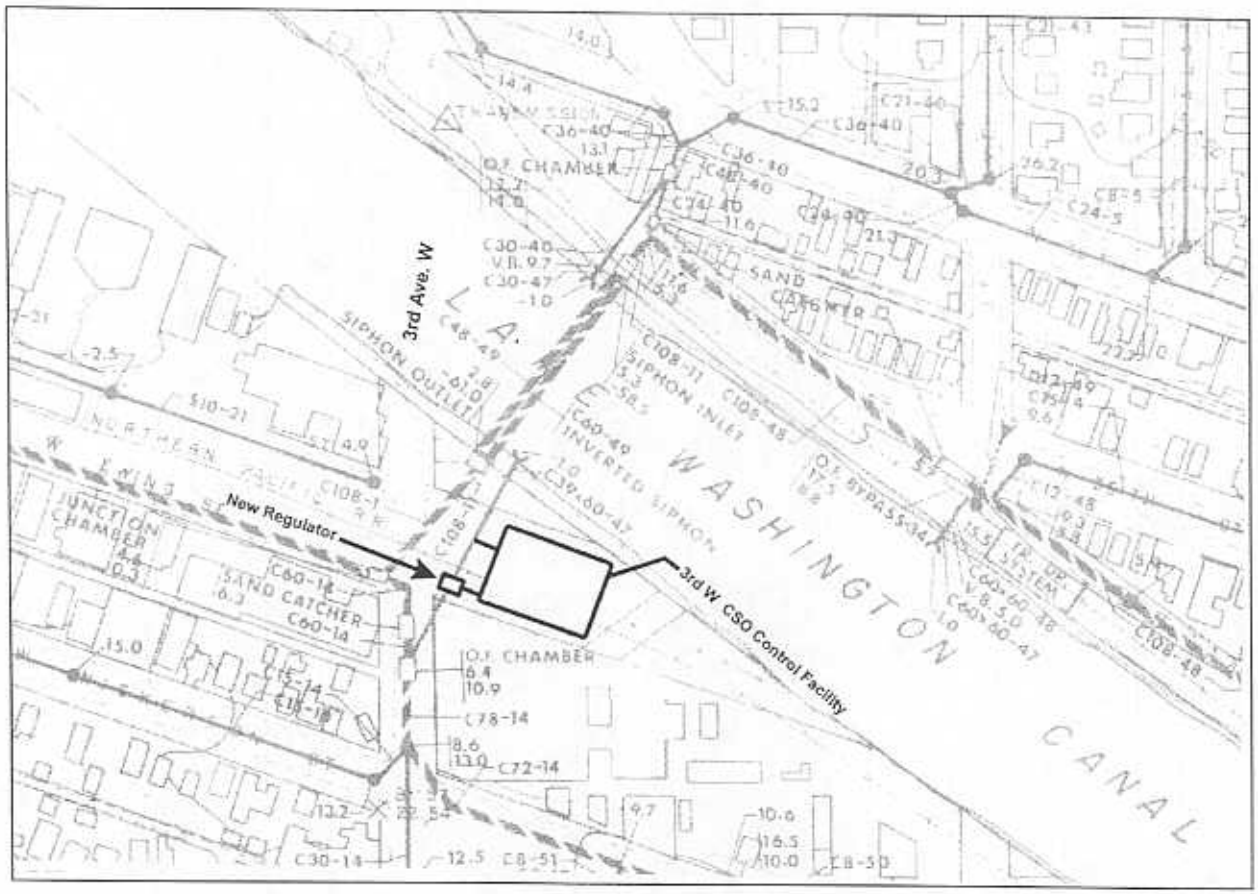

Figure 4-9. 3rd Avenue West CSO Control Facilities.

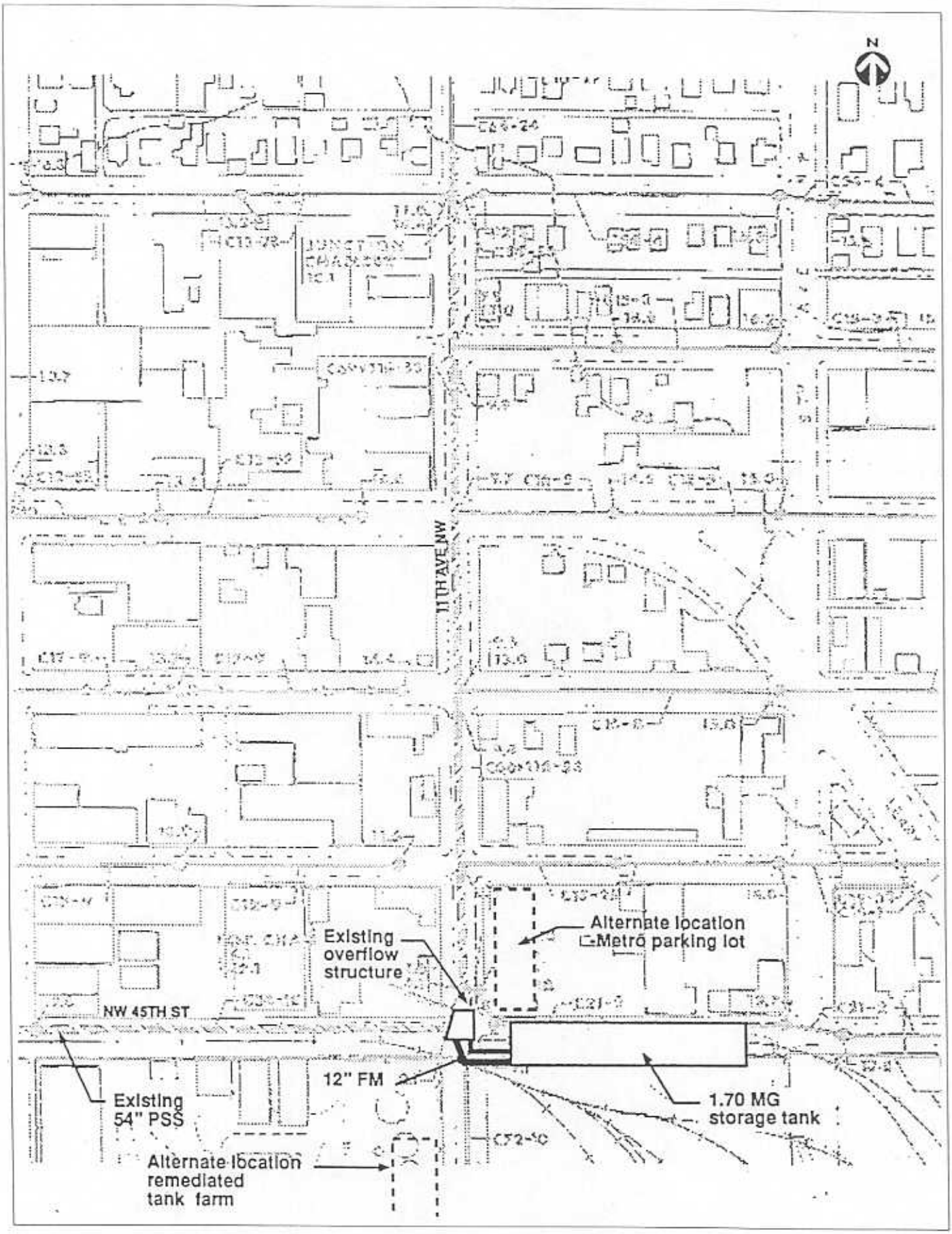

Figure 4-10. Conceptual Layout of CSO Control Storage Alternative at 11th Avenue NW Weir.

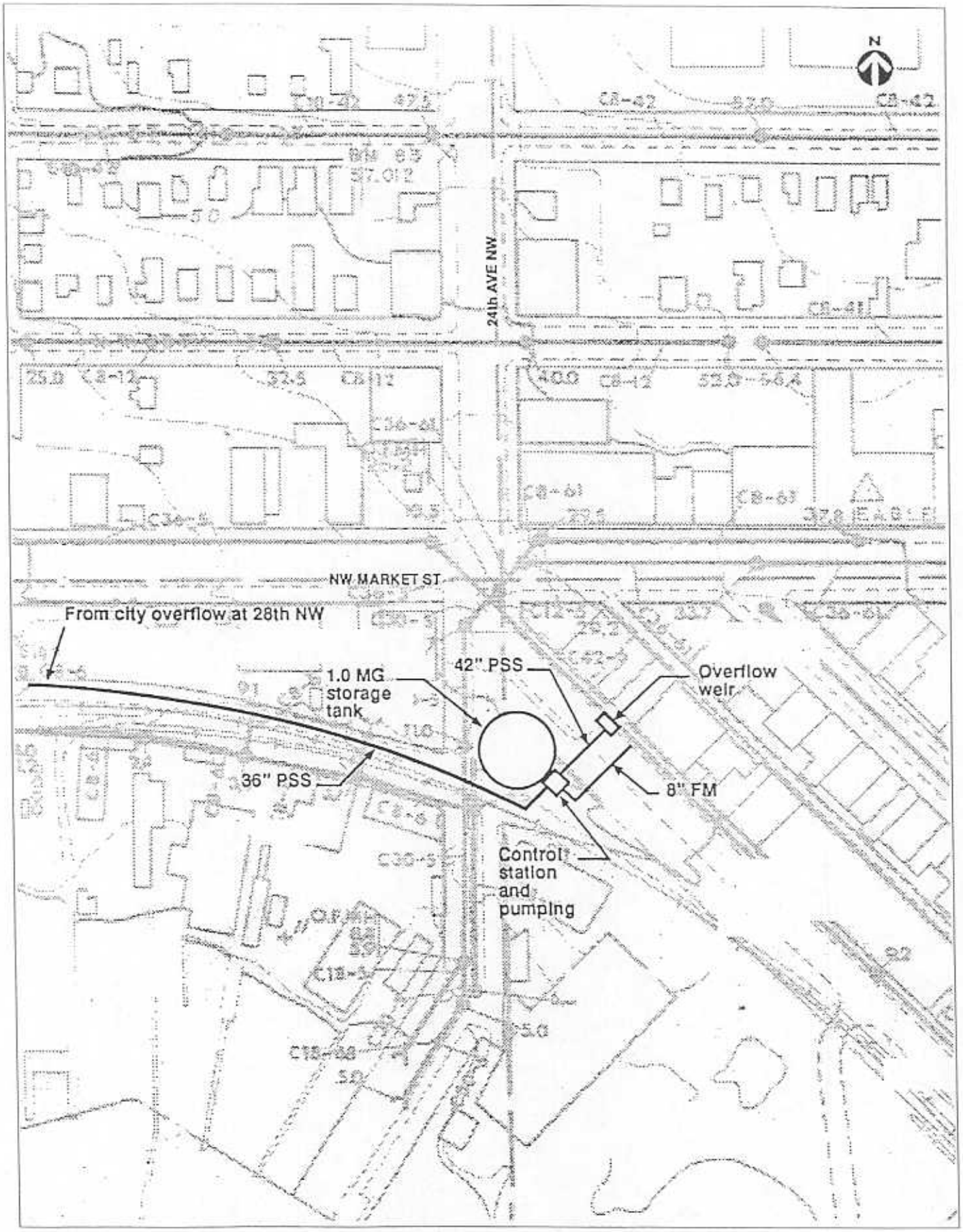

Figure 4-11. Conceptual Layout of City and Metro Ballard CSO Control Storage Alternative.

either 7.5 MG (existing condition, no new lake line) or 12 MG (increase NSA transfer to West Point, new lake line). In the Task 5 report, the site south of the Husky Stadium (site 3) was included.

Table 4-21. Alternative University/Montlake Storage Tanks.

Tank Site	Available Volume MG	Project Cost $millions
1	12	103.1
2	12	90.8
3	7.5 12	47.6 67.6
4	3.5	17.4
5	2.0	15.9
6	5.5	37.2

All these sites have difficult environmental problems. The sites on the Montlake parking lot and intramural fields are on former landfill. Construction difficulties, potential hazardous waste concerns, and expected mitigation measures make these sites unattractive and costly. On the Montlake parking lot, it has been assumed that the presence of municipal landfill would require that the tank be built aboveground on piling with parking on top. The parking lot at the intersection of Montlake Boulevard and NE 45th Street may also be on fill; whether municipal land fill or not is unknown. But because this site was formerly a part of the marshy area connected to Union Bay, construction may be more difficult. The University of Washington may welcome construction of a tank in the Portage Vista looking upon it as a source of funds for construction of the Vista itself. Odor control requirements at this site will be critical due to the proximity of new University buildings and public use of the Vista. Any site on exiting parking areas will require development of temporary replacement parking; these sites have not been identified to date.

The Husky stadium parking lot site presents the least construction difficulties as related to subsurface conditions. The construction window available is only 8 months, however to avoid interference with stadium use in the football season. This window may place a limit on the physical size of the tank that can be constructed in this location or will necessitate construction or cause construction to take place in two or more separate periods (for example, construct half the tank in one construction window, close up the construction site for the football season, and re-open the site for completion of construction in the following construction window). In addition, there will be significant impacts on the difficult traffic conditions on Montlake Boulevard and NE Pacific Street.

Although not developed in detail, it is possible that the University and Montlake CSOs could be controlled by using many small storage facilities spread uniformly over the tributary area. These could include making use of available storage in large trunk sewers in areas where partial separation has already occurred, and construction of additional small storage tanks or storage pipes in appropriate areas. Such an approach would be combined with a program to disconnect

roof drains in partially separated areas as discussed further in another section of this report. Such an approach may be more or less costly than the other solutions discussed herein. This approach lends itself to incremental improvement over time by using small lower cost facilities, taking advantage of existing facilities, and could involve the community in the solution through voluntary efforts. Environmental, cost, and social impacts may be significantly lower with such an approach compared to the storage or treatment alternatives.

3rd Avenue West

The 3rd Avenue West overflow occurs from the Central trunk at 3rd West and West Ewing Street adjacent to the Seattle Pacific University (SPU) Gymnasium (see Figure 4-9). The old railroad bed that may become part of the Burke Gilman Trail extension runs adjacent to the site. This area is currently used as an informal parking area. Storage for 3rd West overflows would be placed between the seawall of the Ship Canal and the property line of SPU. A new regulator and conduit to divert overflows to the tank would be required. The tank would be a long structure to fit the narrow space. Without the Denny Way storage/treatment project that diverts excess volume upstream of the Dexter regulator, the volume necessary is 5.5 or 7 MG depending on the RWSP configuration selected for West Point (the larger volume is required if a new lake line is constructed to bring flows from the NSA).

The Denny Way storage/treatment project under design as this report is being finalized will divert enough flow from upstream of the Dexter regulator to prevent overflows at Dexter in the once per year design storm. At this level of diversion, and under existing conditions (West Point 133 mgd), recent analysis suggests that the 3rd West overflow in Design Storm #6 would be reduced to about 3.1 MG from 5.5 MG. If no further system optimization were undertaken to reduce 3rd West overflows using the Denny facilities, storage requirements at 3rd West would be reduced to 3.1 MG. The project cost estimate for this facility is approximately $16.2 million.

The possibility to further reduce 3rd West overflows by increasing diversions from the Central Trunk to the proposed Denny Way storage/treatment system was also considered. In this alternative, an additional 25-30 mgd in the Central Trunk as it crosses the new Mercer Tunnel would be diverted—up to a total of approximately 60 mgd in the once per year design storm (Storm #6). Preliminary hydraulic analysis by King County suggests that in the existing condition (no new lake line), the overflows at 3rd West would be reduced enough to achieve once per year control without further storage. This approach would require that the Dexter regulator be modified to permit increasing the storage depth, modifying the 3rd West overflow and installing an additional pump at the Elliott West facility associated with the Denny project. The project cost for these modifications alone is approximately $3.5 million.

Increasing the Central Trunk diversion to the Denny project will require more detailed hydraulic analysis to verify feasibility and to confirm the minimum storage requirements at 3rd West. To completely achieve once per year control at 3rd West without additional storage may be difficult due to the long time delay between action at the Dexter regulator and resulting behavior at 3rd West. In addition, reduction of flows in the Central Trunk may result in CSO flows from the North Interceptor over-topping the 3rd West weir. For this report, an allowance for additional storage of 1.0 MG is assumed as an estimate for additional storage requirements at 3rd West after

additional diversion from the Central Trunk to the Denny facilities is put in place. Further detailed analysis may show that this additional storage is not required.

Costs and sizing are not available for the case with a new lake line. However, savings should be available in this configuration also.

Project costs for the 3rd Avenue West alternatives are shown in Table 4-22.

Table 4-22. Project Costs for 3rd Avenue West Alternatives.

Alternative Description	Project Cost for West Point at 133 mgd, $mill	Unit Cost, $/MG	Project Cost for West Point at 159 mgd, $mill	Unit Cost, $/MG
Storage tank, 5.5 or 7 MG without Denny storage/treatment project	25.1	0.49	32.4	0.64
Storage tank 3.1 or 4.6 MG—minimum use of Denny project	16.2	0.32	22.2	0.44
Increase diversion to Denny facilities and 1.0 MG storage	9.7	0.19	NA	–

11th Avenue NW

The 11th Avenue NW overflow location requires a 1.7-2.0 MG storage tank depending on the selection of a new lake line to increase flows to West Point in the RWSP. The 11th Avenue NW site is currently surrounded by storage yards, an abandoned warehouse, and a former petroleum company tank farm (see Figure 4-10). The abandoned warehouse is under re-development. The tank farm is being remediated. King County leased a parking area for West Point construction support traffic to the immediate north east of the overflow. Any of these could be used for a storage tank site. In addition, the tank could be constructed as a box structure underneath NW 45th Street. Development in conjunction with the Burke-Gilman Trail extension is a possibility.

The installation will require a new regulator station to divert flows to the storage tank This could be constructed as part of the existing overflow structure, or could be placed on the exiting outfall pipe. Project costs for this facility are shown in Table 4-23.

Table 4-23. 11th Avenue NW Storage Alternative Project Costs.

Alternative Description	Project Cost, $mill	Unit Cost, $/MG
Storage tank, 1.7 MG, no new lake line	10.2	0.57
Storage tank, 2 MG with new lake line	11.5	0.64

The above storage tanks were developed to store all the existing overflow from 11th Avenue NW assuming continuous operation of the Carkeek CSO Transfer pump station. Carkeek delivers up to 8.4 mgd to the 11th Avenue NW structure during wet weather events. A preliminary examination of an alternative to reduce 11th Avenue NW storage requirements by modifying the

Carkeek pump station operations was conducted. In this modification, the Carkeek pump station would cease to transfer flows to 11th Avenue NW if and only if the Carkeek Wet Weather Treatment Facility were discharging. A preliminary estimate of this operation suggest that the storage tank size at 11th Avenue NW could be reduced to about 1.0 MG from 1.7 MG, saving approximately $6 million. This alternative would require the following considerations for implementation:

- The Carkeek discharge permit would have to be modified to permit discharge of more flows during the larger rainfall events. Frequency of discharge at Carkeek would not be increased.
- The operational costs at Carkeek including additional chemical use and operator attention need to be reviewed.
- The system controls necessary to make this alternative feasible would require significant development. Use of Doppler rainfall measurements and storm intensity/duration predictive techniques would be required to optimize operation and ensure that requirements are met at 11th Avenue NW.

Ballard Regulator

The Ballard regulator is surrounded by the dense industrial/commercial zone along Shilshole Avenue. Modifications to King County's SCADA system together with the new Fort Lawton tunnel to West Point have significantly reduced overflows at this location. Currently, it is estimated that the overflow volume in the once per year design event is 0.4 MG with no impact from the increase in flows associated with a new lake line. Ballard receives flow from 11th Avenue NW and from the city of Seattle overflow at 29th Avenue NW and NW Market Street (NPDES number 150/151). The King County hydraulic model was used to estimate a 0.6 MG overflow from the city facility in the once per year design storm.

King County and the city could pursue separate efforts for control of their respective overflows. However, it has been shown that a joint facility to control both the Ballard and city overflows would be more cost-effective, saving an estimated 25 percent over separate facilities (*Metro CSO 5 Year Update-Potential Joint Metro/City of Seattle CSO Projects, Task 4.05 Report, December 1994*). As a result, the alternative presented here and in the Task 5 report assumes a joint 1.0 MG facility to achieve control of both overflows. It has been assumed that the King County cost share for this joint facility will be 40 percent based on the relative volume from the two agencies.

The alternative developed includes a new 30-inch pipeline long the railroad right-of-way from 24th Avenue NW to 29th Avenue NW to intercept city overflows and deliver them to the control facility. The railroad right-of-way is a potential extension of the Burke Gilman Trail. As shown in Figure 4-11, the control facility consists of a circular 1.0 MG storage tank located in an informal parking area near the intersection of Shilshole Avenue NW and 24th Avenue NW. A new overflow weir structure would be constructed on the trunk sewer in Shilshole Avenue NW to accept excess flows from the Ballard regulator. The total project cost estimate for this facility is $6.4 million. The King County share of this cost (included in the Task 5 report) is estimated to be $2.6 million.

NORTH INTERCEPTOR CSO TREATMENT ALTERNATIVES

The storage tanks discussed in the preceding section may have difficult siting issues due to their size and location. CSO treatment facilities are generally smaller because the volume need for treatment is a fraction of the storage volume needed to meet the regulations. Because of the reduced volume, CSO treatment facilities are generally less costly than storage solutions in addition. Accordingly, alternatives for CSO treatment at the North Interceptor CSO locations were developed. The treatment facilities would consist of either primary sedimentation tanks or vortex separators. The projects are sized to reduce untreated overflows to once per year, and include effluent disinfection and odor control. All facilities were assumed to be below grade. Facilities would be located at the sites described in the preceding section on storage tanks. The projects are summarized in Table 4-24.

Table 4-24. North Interceptor CSO Treatment Facilities.

CSO Location	Facility volume, MG	Maximum overflow rate in Design Storm #6, gpd/square foot	Approximate discharge frequency, per year	Annual discharge volume reduction, percent
University/Montlake	4.6	3,200	<4	40
3rd Avenue West	1.2	2,900	4-5	28
11th Avenue NW	0.6	4,000	4-5	33
Ballard storage tank	1.0	–	1	60

The treatment units were sized to have a volume at least as large as the increase in overflow that would occur at these locations if a new lake line were selected in the RWSP. This is necessary to prevent an increase in the annual discharge volume associated with larger flows from the Kenmore area. As a result of this volume requirements, the overflow rates at these treatment units at the peak of Design Storm #6 would be lower at the University and 3rd Avenue W facilities than the criteria used for primary treatment in the Duwamish area. Construction of these facilities would prevent an increase in discharge volumes above the baseline in the North Interceptor basin if a new lake line is constructed. CSOs would be treated, meeting the once per year CSO control requirement. If King County does not select RWSP alternatives that include a new lake line, then it may be possible to reduce the size of the University and 3rd Avenue West facilities. It should be noted that the volume of the 3rd Avenue West tank is consistent with the volume needed if control of this facility is combined with the Denny Way facilities as discussed in the preceding section.

The Ballard storage tank was not considered as a candidate for conversion to a treatment facility under this alternative. It will be a joint facility with the city of Seattle who may not wish to provide treatment at this facility. Also, the actual conditions under which the tank must operate are not clear given the Carkeek transfer and uncertainty about the West Point operations relative to the 440 mgd set point. The tank size could be reduced for CSO treatment at this location, but the footprint savings are likely to be minimal.

The project costs for this treatment alternative group are shown in Table 4-25.

Table 4-25. Project Costs for North Interceptor CSO Treatment Alternatives.

CSO Location	1998 Annual CSO, MG	Storm #6 Volume, MG	Project Cost, $mil	Unit Cost, $/gallon	Location
University Montlake	58 4	6.6 0.8	$53.1	0.86	Combined treatment for University and Montlake regulators. Located in parking lot south of Husky Stadium.
3rd Avenue W	51	5.5	$12.8	0.25	Extension of Ewing St. east of 3rd Avenue adjacent to Ship Canal
11th Avenue NW	18	1.7	$8.9	0.44	Beneath segment of NW 45th St. or adjacent private property
Ballard	4	0.4	$6.4[a]	0.65	Storage tank only: Community open space east side of Shilshole Avenue
Totals	135	15	$81	0.60	

[a] Total joint project cost. King County share estimated to be $2.6 million.

PARTIAL SEPARATION ALTERNATIVES

The following preliminary partial separation alternatives were developed for the University/Montlake and Ballard basins for comparison with other approaches.

University/Montlake

Significant portions of the University tributary area have already been partially separated. However, a total of 2,258 acres of combined area remains around Green Lake and the University of Washington. Separated stormwater would be discharged to the Ship Canal via one or more new outfalls.

Partial separation of this remaining area would reduce University overflows to approximately 1.5 MG in the once per year design storm. The remaining overflow is due to still connected roof drainage, area drains and infiltration from leaky sewers, manholes, and building laterals. This remaining overflow could be controlled by construction of a storage tank in the vicinity of the University CSO, or could be controlled using a combination of smaller storage facilities in the tributary area and roof drainage disconnection programs. Assuming a central storage tank, the project costs of this approach are given in Table 4-26. The total unit cost for this approach would be approximately $5/MG. While this significantly reduces the impacts associated with large scale storage or treatment in the area of the University regulator, it would create significant disruption on the streets where separation occurs.

Montlake overflows would be controlled by completing the previous partial separation project north of Thomas Street. This would include the construction of the planned Harrison Street stormwater tunnel (2,640-linear feet of 8-foot diameter tunnel), and diversion of separated stormwater that re-enters the combined sewer to this new tunnel.

Table 4-26. University/Montlake Separation Alternative Project Costs.

Project Element	Sizing	Project cost, $million
Partial separation in University tributary area	2,258 acres	226
New stormwater outfalls		56
Additional storage-University site 4	1.5 MG	7
Harrison Street Tunnel	8-ft	13
Total		302

Ballard and 11th Avenue NW (Ballard Basin)

The Ballard basin consists of 15 subbasins, totaling 2,484 acres. The King County CSO locations are the Ballard regulator and the 11th Avenue NW overflow structure. City of Seattle CSOs 150, 151, and 152 at the foot of 28th and 24th Avenues NW are closely associated with the Ballard regulator. Control of these has been considered as a joint project opportunity due to the economies of scale that can be accomplished. The Carkeek flow transfer also adds up to 8.4 mgd to the 11th Avenue NW system.

King County's current model estimates of the Ballard system include an annual CSO of 28 MG for the combined Ballard, 11th NW and city overflows, with a design storm overflow of 2.7 MG. Options examined for control include varying combinations of storage and separation purposes.

Of the 15 Ballard subbasins, 10 subbasins totaling 1,123 acres, have been partially separated. The overflows at the two King County locations and at the city CSO locations were modeled successively for the partial separation of the remaining five subbasins. As shown in Table 4-27, the need for some storage at the location of the 11th Avenue NW and city overflows will not be completely eliminated even if the entire basin is partially separated. Potential storage sites are discussed in the preceding section on storage tank alternatives.

Table 4-27. Ballard Separation Cost Analysis.

Acres of Additional Partial Separation	Percent of Area	Ballard Overflow (MG)		11th Avenue Overflow (MG)	Project Cost, Millions
		City 150/151	King County Ballard Regulator		
0[a]	45	0.88	0.35	1.71	17.4
224	54	0.44	0.27	1.57	37.5
461	64	0.12	0.19	1.40	59.1
683	73	0.01	0.07	1.23	77.9
1,020	86	0.01	0.02	0.59	108.1
1,361	100	0.01	0.00	0.17	138.3

[a] 1,123 acres currently partially separated.

The storage components will consist of two separate facilities at the locations of the 11th Avenue weir and in the vicinity of the Ballard regulator. A facility at the latter location will provide

storage volume for the overflows at the Ballard regulator and for the city overflows. Through the 64 percent separation levels, storage volume will be provided in tanks. For the higher separation levels, the remaining overflow volume will be stored in large diameter pipes. The project cost for partial separation is assumed to be $100,000/acre as discussed earlier.

As shown in Table 4-27, the optional combination of separation and storage, resulting in minimum project cost, is associated with the existing level of separation. In other words, additional separation is not cost-effective. This is true so long as the project cost for partial separation exceeds $10,000 per acre—one tenth the current estimate and well below historical experience.

ALKI BASIN

Overflows during Design Storm #6 have been preliminarily determined with King County's current model at the Barton and Murray pump stations, and the interceptor overflow at Beach Drive SW and SW Alaska Street. The current estimate of these overflows is about 0.4-0.6 MG at each location. The total annual overflow from these three locations is estimated to be about 24 MG per year. King County's model has not been completely calibrated for this basin. The potential overflow ranges from little or none to about twice the current estimate. Calibration data are being collected, which will allow a more accurate assessment over the next few years.

Alternatives have been developed based on the current overflow estimates to give a preliminary assessment of available technologies and an estimate of cost. Four complete alternative groups containing elements for each of the CSO locations were developed. The alternative components include separation and conveyance and storage. The estimated project costs for these alternatives are shown in Table 4-28. Project separation costs were derived from detailed costs prepared for the Ballard and Denny/Lake Union basins.

Table 4-28. Alki Basin CSO Control Alternatives.

CSO Alternative	Annual CSO Volume, MG	Project Cost, Millions	Unit Cost, $/gallon
Separation	24	$15	$0.63
Offline Storage	24	$12	$0.50
Offline Storage with Pump Station	24	$17	$0.71
Parallel Conveyance	24	$24	$1.0

PARTIAL SEPARATION

The Barton pump station service area includes about 140 acres of combined sewer system south of the Seattle city limit. Partial separation of this area together with completion of separation along 35th Avenue SW may eliminate overflows at all three locations.

OFFLINE STORAGE

This alternative group includes two offline storage facilities with a total volume of 1.5 MG. The two facilities with this alternative will fill by gravity and drain by gravity when excess capacity exists in the system.

A 0.5 MG offline storage facility for the Barton CSO will be located east of Fauntleroy Cove beneath the relatively level school grounds of Fauntleroy School. This facility will require approximately 800-feet of 24-inch RCP to connect with existing sewers for filling and emptying the storage facility.

A 1.0 MG offline storage facility will be located east of 48th Avenue SW about 1/4 mile up the hill from Lowman Beach Park. This facility will require approximately 500-feet of 24-inch RCP to connect with existing sewers for filling and emptying the storage facility.

The location of these two facilities are in close proximity to major collection sewers that sewer the areas. By taking the peak flows out of the system at these locations during large storm events, additional capacity will be available in the system to avoid the CSO event.

OFFLINE STORAGE WITH PUMP STATION

This alternative group includes three offline storage facilities with a total volume of 1.5 MG and a 7.5 mgd pump station with approximately 7,400 feet of 24-inch force main.

A 7.5 mgd pump station located beneath the parking area for the Fauntleroy-Vashon-Southworth Ferry docks would pick up peak flows from the Barton CSO event and pump it through 7,400 feet of 24-inch force main to an offline storage facility located in Lowman Beach Park. A 0.1 MG below-grade storage facility will serve to take the peak off the Barton CSO flow and keep the pump station size to a minimum. A 0.1 MG storage facility will also serve as a wet well for the 7.5 mgd pump station.

The force main connecting the new 7.5 mgd pump station and the new Lowman Beach Park offline storage facility will be located along the coastline between the two facilities.

The offline storage facility at Lowman Beach Park will have a total storage volume of approximately 0.5 MG. The facility will be filled from the new force main and by gravity from the local contributing interceptors in the vicinity of Lowman Beach Park. After the storm event subsides, the facility will be pumped out into the existing Murray Pump Station by a 0.4 mgd pump station.

The last offline storage facility is located beneath SW Alaska Drive extending east from Beach Drive. This 0.6 MG storage facility will be a below-grade structure with a narrow width to keep the structure within the existing right-of-way. Homeowner access during construction will be an issue as well as construction noise, debris, and traffic. This facility will fill by gravity and be pumped out by a 0.3 mgd pump station when excess system capacity exists.

The locations of the components associated with this alternative group are shown in Figure 4-12.

PARALLEL CONVEYANCE SYSTEM

In this alternative grouping, a pumping and force main system would be installed in parallel with the existing conveyance to deliver CSOs to the Alki plant. No significant storage is included. Therefore, peak flows entering the Alki plant would be increased by 28 mgd. Elements included in this alternative are a 7.5 mgd pump station with approximately 7,400 feet of 24-inch force main, an 18 mgd pump station with approximately 7,900 feet of 30-inch forcemain and a 28 mgd pump station with approximately 5,300 feet of 36-inch forcemain.

A 7.5 mgd pump station located beneath the parking area for the Fauntleroy-Vashon-Southworth Ferry docks would pick up peak flows from the Barton CSO event and pump it through 7,400 feet of 24-inch forcemain to an 18 mgd pump station located in Lowman Beach Park. A 0.1 MG below-grade storage facility will serve to take the peak off the Barton CSO flow and keep the pump station size to a minimum. The 0.1 MG storage facility will also serve as a wet well for the 18 mgd pump station.

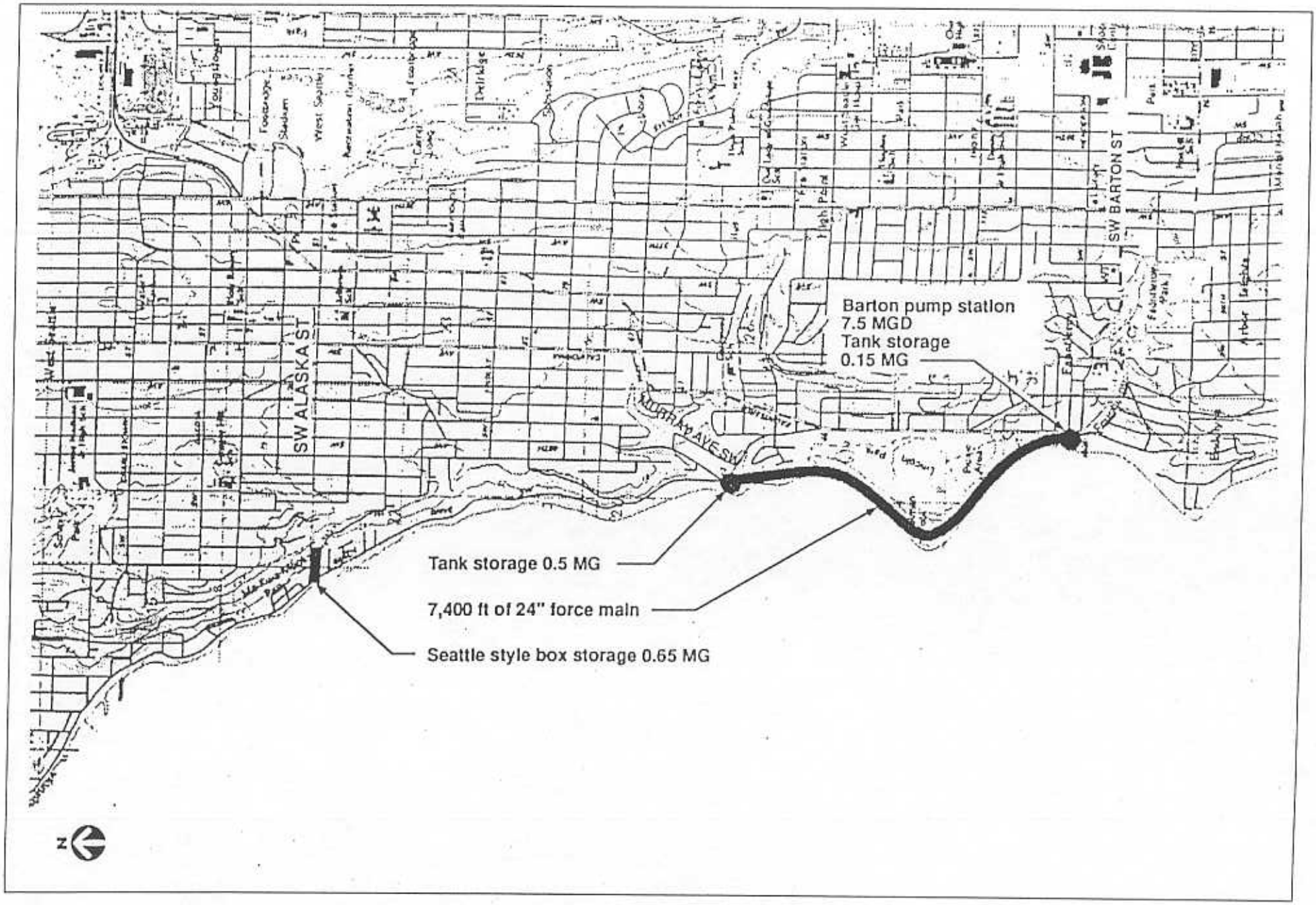

Figure 4-12. Conceptual Layout for Alki Basin CSO Control Conveyance Storage Alternative.

The force main connecting the new 7.5 mgd pump station and the new Lowman Beach Park pump station will be located along the coast and generally follow the coastline between the two facilities to an storage tank in the park near the Murray pump station.

The 18 mgd pump station at Lowman Beach Park will pick up the flows from the 24-inch forcemain and the local Murray CSO volume and pump them through a 7,900 foot, 30-inch forcemain to the 28 mgd pump station located near Beach Drive and SW Alaska Drive. The alignment of this force main segment will generally follow Beach Drive.

A 5,300 foot, 36-inch force main will connect the 28 mgd pump station with the existing Alki Point Treatment Plant. The alignment of this forcemain segment will generally follow Beach Drive.

BUILDING SEWER REHABILITATION AND ROOF DRAINAGE SEPARATION

The alternatives discussed above all have significant construction impacts on the Alki community. As a means of reducing the scale of these projects, a program to further remove infiltration and inflow should be considered.

Most of the Alki service area was partially separated in the 1970s. This partial separation intercepted only street drainage leaving roof drainage and any area drains on private property still connected to the combined sewers. In addition, it is known from local and national experience that building side sewers may contribute 50 percent to peak flows in prolonged wet periods. Across the country, there have been a variety of approaches to such infiltration/inflow sources on private property as discussed later. A program of voluntary, subsidized, or mandatory removal of such excess flows would significantly reduce the scale of storage and transfer projects needed for control.

In the Alki service area there are areas of slope instability and low areas below street grade where disconnection of roof drainage and area drains, and rehabilitation of side sewers would be inappropriate or require special techniques. These conditions will necessitate a case-by-case review of properties for this approach, and may prevent a uniform application. Because the effectiveness of this approach is unclear, the RWSP has presented a program consisting of initial construction of CSO control projects appropriate for a four per year control level (federal CSO policy level) with completion of once per year control projects later in the overall program. This provides early improvement in CSO conditions and allows time for further review and testing of programs for reduction of infiltration/inflow from private property. If successful, this program would eventually reduce CSOs from the initial projects to the once per year level.

WEST SEATTLE BASIN

This basin includes the Harbor, Chelan, 8th Avenue South, and W Michigan regulators. CSO flow volumes and rates associated with these regulators are shown in Table 4-29. CSO control alternatives include storage, pumping and conveyance, and separation. The estimated project costs for the various alternatives are shown in Table 4-32 at the end of this section. Project separation costs were derived from detailed costs prepared for the Ballard and Denny/Lake Union basins.

Table 4-29. West Seattle CSO Existing Conditions.

CSO Name	Annual 1998 Volume MG	Storm #5 1998 Volume MG	Storm #5 1998 Peak Rate, mgd	Storm #6 1998 Volume MG	Storm #6 1998 Peak Rate, mgd
Harbor Avenue	58	3.3	NA	3.4	17
Chelan	66	3.8	NA	4.0	37
8th Avenue S	12	0.7	NA	1.3	16
W Michigan	2	0.1	1.7	0.1	2
Terminal 115	5	0.3	4.1	0.5	6.6

HARBOR REGULATOR CSO CONTROL ALTERNATIVES

Alternatives considered for Harbor include separation of the tributary area and storage in the Alki tunnel.

Conveyance/Storage Alternative

The Harbor regulator has a design storm overflow of about 3.4 MG. The overflow structure is located at such an elevation relative to the proposed West Seattle tunnel that all overflows could be conveyed to the tunnel for storage. The West Seattle tunnel will contain an empty volume of about 5.9 MG. Flows from the Harbor regulator will be conveyed in a new 620-foot 54-inch conduit in Harbor Avenue constructed in conjunction with the West Seattle pump station forcemain. A new control gate will be installed in the 54-inch line near the regulator station. Stored flows will be conveyed to the Elliott Bay Interceptor (EBI) via the West Seattle pump station. The connecting pipe is under design as part of the West Seattle tunnel project. The cost estimate shown in Table 4-30 was provided by King County from that project. Locations of the proposed facilities are shown in Figure 4-13.

Separation

This alternative would involve separation of combined sewers in the residential area west of the Harbor regulator station. This project would separate the stormwater runoff from an area of 413 acres by installing storm drains, connecting the existing catch basins, or adding new catch basins and discharging directly into Elliott Bay. This would reduce but not eliminate Harbor Avenue overflows. Thus the conveyance/storage alternatives described above would also be constructed.

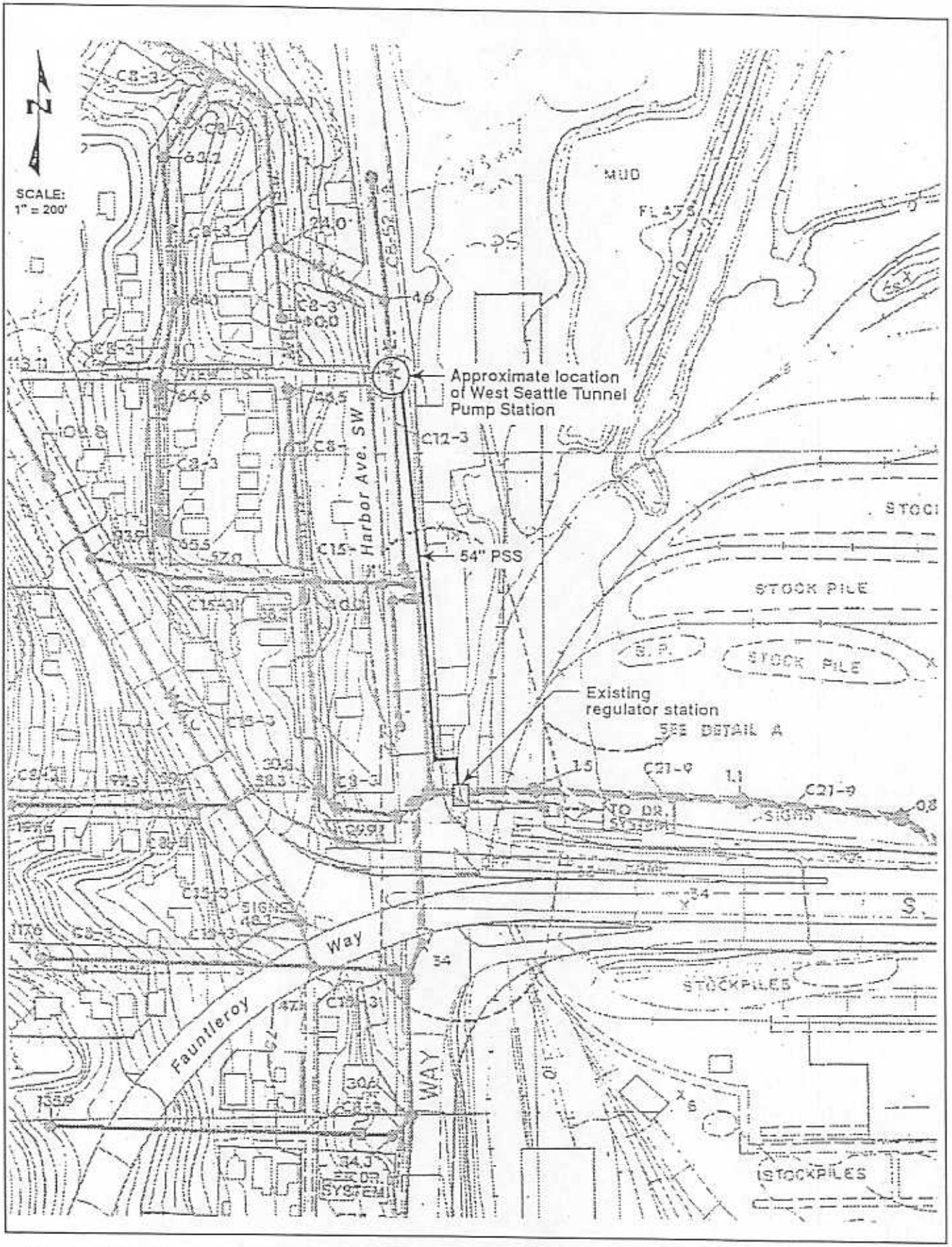

Figure 4-13. Conceptual Layout for Harbor Avenue CSO Control Conveyance Alternative.

CHELAN REGULATOR CSO CONTROL ALTERNATIVES

The Chelan regulator receives flows from the Harbor regulator and from the Delridge Way area. The Delridge portion of the tributary area is mostly separated. The city of Seattle maintains two 1.6-MG CSO storage tanks in the upstream Delridge area. Two CSO control storage alternatives were developed involving raising the storage set point and pumping and conveyance. Location of these facilities are shown in Figure 4-14.

Both storage solutions depend on conveyance of the overflow to the site of the new West Seattle pump station at the end of the Alki tunnel. The design storm overflow from Chelan is estimated to be about 4.0 MG with a peak rate of about 37 mgd. By raising the storage set point to elevation 112.0 feet, it will be possible to convey much of this flow by gravity back to the Harbor regulator through an existing abandoned 72-inch storm drain that will be rehabilitated and converted into a sanitary trunk sewer. A short section of 54-inch conduit would connect the storm drain to the Harbor CSO pipeline described above, to complete conveyance to the West Seattle tunnel. The set point would be effectively raised by the construction of a regulator station north of SW Spokane Street.

Storage in Conjunction with Alki Tunnel

Once CSO flows from Chelan are conveyed to the vicinity of the new West Seattle pump station, it will be possible to store a portion of these flows in the new Alki tunnel. With 19 mgd being pumped from the tunnel to the EBI, and Harbor CSO stored in the tunnel as discussed above, it is expected that there would remain an overflow at Chelan of 1-2 MG. Storage would be constructed at the site of the West Seattle pump station to accommodate this remaining overflow. The required storage would be provided in a single 90-foot diameter caisson sunk immediately adjacent to the West Seattle pump station to a depth of about 70 feet. The caisson would include a wash down system, and two 1.0 mgd submersible pumps for drainage. These would pump directly back to the West Seattle tunnel for delivery to the Elliott Bay Interceptor via the West Seattle pump station. The project cost estimate assumes an augured pile retaining wall similar to early West Seattle pump station concepts. Early partial control of Chelan CSOs could be achieved by constructing the conveyance system described above without the additional storage.

Storage in Separate Tank

The availability of the Alki tunnel for Chelan storage depends on two considerations:

- Consideration is being given to using the excess volume in the Alki tunnel to reduce discharge volumes at the Alki wet weather treatment plant. If additional flows are diverted to the tunnel from the Alki plant service area, there will be less available for Chelan storage.
- Consideration is being given to reducing or stopping the flow from the West Seattle pump station to the EBI during large storm events to reduce discharges at Hanford, Lander, Connecticut, King, and Denny Way.

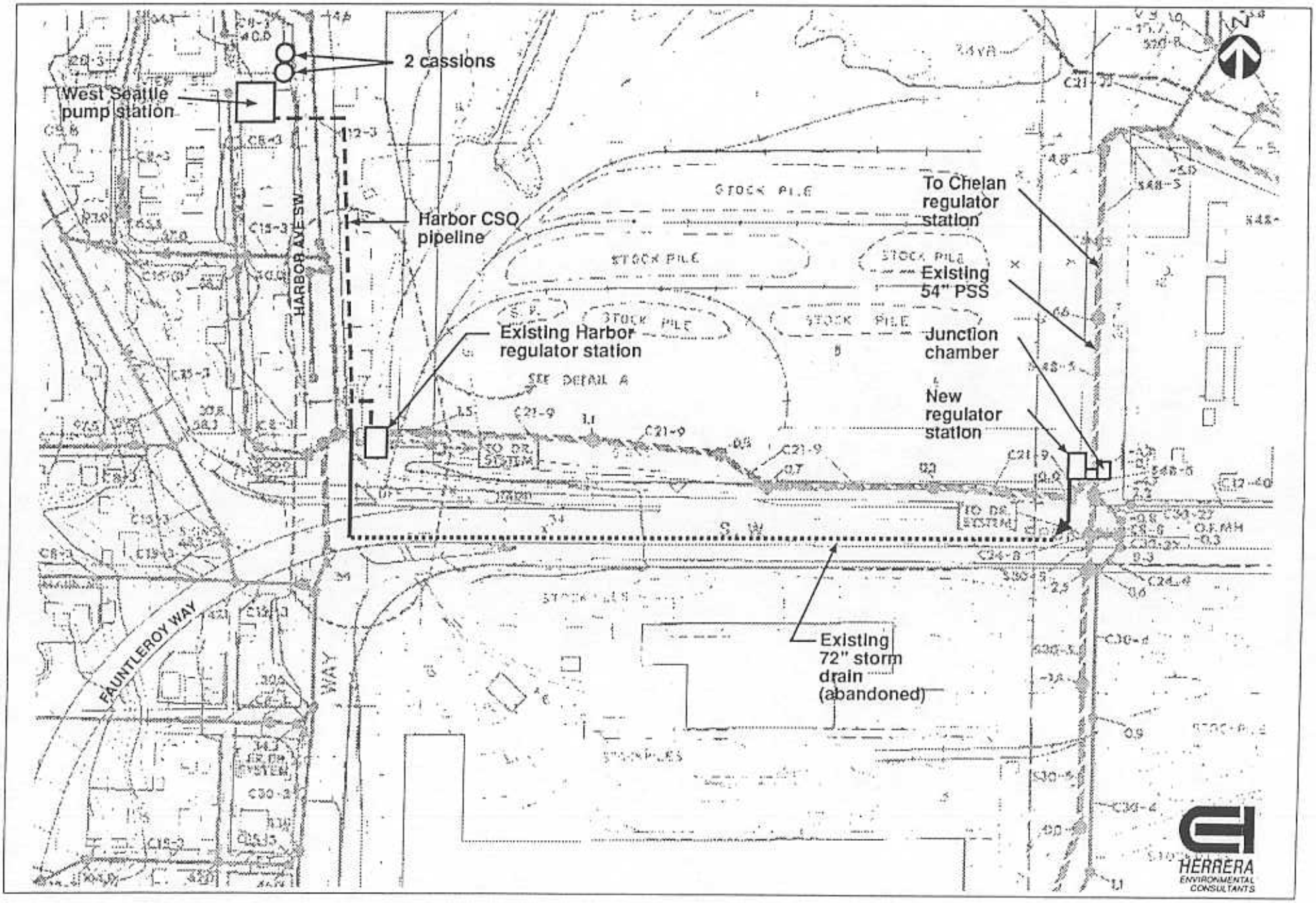

Figure 4-14. Conceptual Layout for Chelan Regulator CSO Control Conveyance Storage Alternative.

If storage is not available in the Alki tunnel, the entire Chelan CSO in the once per year event (4 MG) can be stored in two 90-ft diameter caissons set adjacent to the West Seattle pump station. This alternative does not quite double the construction cost and difficulty.

Refinements

Several changes in the system have occurred since development of these alternatives that will need further review during for detailed design studies, including:

- The Alki tunnel diameter has been enlarged so that the volumes discussed above may need to be modified.
- It is possible that modification to the operations of the city of Seattle's storage tanks could be used to reduce Chelan CSOs. This would involve installation of control gates and SCADA equipment at the tanks and control via King County's system. The feasibility of this change was reviewed (*Metro CSO 5 Year Update-Potential Joint Metro/City of Seattle CSO Projects, Task 4.05 Report, December 1994*), but detailed studies would be needed to confirm the benefit and costs.
- At the time these alternatives were developed, the King County hydraulic model for this area was not completely calibrated. Additional calibration is needed to confirm the sizing.
- Like the Alki basin, this area is largely partially separated, so that a program for rooftop drainage separation and side sewer rehabilitation may reduce storage requirements.

8TH AVENUE SOUTH REGULATOR CSO CONTROL ALTERNATIVE

The area upstream of the 8th Avenue South regulator consists of three basins, totaling 368 acres. Currently, 43 acres are partially separated. Under these conditions, the 8th Avenue regulator is estimated to have an annual overflow volume of 12 MG and a Design Storm #6 overflow of about 1.3 MG. An analysis was conducted to determine if additional partial separation could cost-effectively reduce the storage requirement at this location.

Design Storm #6 flows from these subbasins were modeled for varying levels of separation to determine how many acres would have to be separated to eliminate overflows at the regulator. As shown in Table 4-30, even 100 percent separation of the area upstream of the regulator will not entirely eliminate overflows. The failure to completely eliminate overflows is due to the interconnection between the regulator and the West Duwamish Interceptor. When the interceptor fills up, the gate in the regulator closes, resulting in an overflow.

Table 4-30. Eighth Avenue S Regulator - Upstream Separation Analysis.

Acres of Partial Separation	Percent of Area	8th Avenue S Regulator Overflow (MG)	Project Cost, Millions
43[a]	12	1.30	6.2
108	29	0.62	10.4
368	100	0.15	34.6

[a] Currently partially separated

Additional acreage downstream of the regulator along the Rainier Vista Interceptor would have to be partially separated to reduce overflows to a level where no storage is needed. The three basins surrounding the northern end of the Rainier Vista Interceptor total 90 acres, of which 48.8 acres are currently partially separated. As shown in Table 4-31, all 90 acres would have to be separated to eliminate the need for storage at the regulator. To eliminate storage, the total combined acreage that would have to undergo partial separation is 366.2 acres.

Table 4-31. Eighth Avenue S Regulator - Downstream Separation Analysis.

Acres of Partial Separation	Percent of Area	8th Avenue S Regulator Overflow (MG)	Project Cost, Millions
48.8[a]	54	0.15	34.6
73.8	82	0.07	35.9
90	100	0.00	36.6

[a] Currently partially separated

The total cost for separation and storage was calculated for the separation levels shown in the above tables. These results are shown graphically in Figure 4-15 for three different unit separation costs. The per-acre cost for partial separation used in this report is estimated at $100,000, as discussed previously. As shown in Figure 4-15, no additional separation is cost-effective so long as the unit cost exceeds $10,000/acre. Thus the recommended solution for 8th Avenue South is to construct a storage tank only.

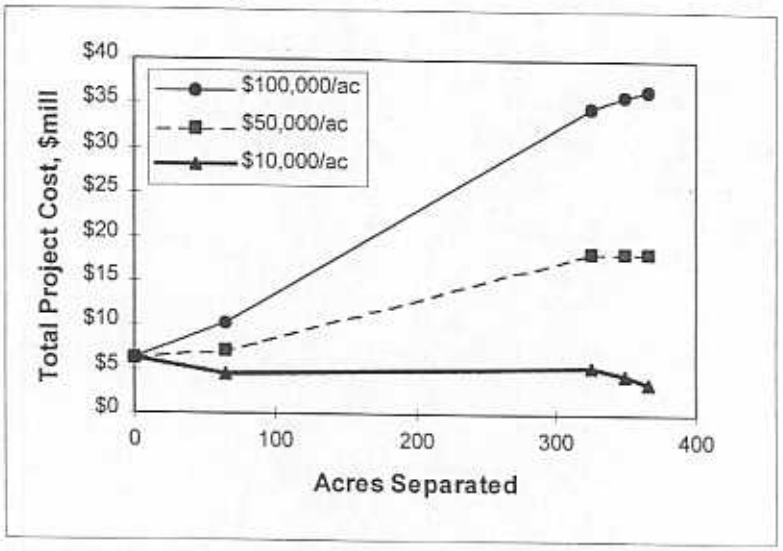

Figure 4-15. Total Project Cost as a Function of Additional Partial Separation for 8th Avenue South.

Note: Results for three assumptions on the unit cost of separation are shown.

The storage component will consist of a tank sized to contain the overflow, a pump station, and 370-foot forcemain to return flow to the interceptor when capacity is available and a 220-foot gravity sewer to convey flow from the regulator to the tank. An overflow weir upstream of the existing regulator station will divert flow into the storage tank. The 8th Avenue South regulator

is located in a mixed residential/industrial neighborhood. A small community open space adjacent to the regulator station could be used as the site of the storage tank. Further improvements to the open space could be mitigation. Alternative sites are on private property (warehouse) to the southwest of the station. It would also be possible to construct a box structure underneath the adjacent street.

A conceptual layout of the storage components associated with the recommended storage alternative is illustrated in Figure 4-16. This alternative would involve no additional separation.

WEST MICHIGAN REGULATOR

The West Michigan regulator overflows approximately eight times per year in small volumes due to the restriction of the small diversion pipe (10-inch diameter) leading to the interceptor. The annual overflow is estimated to be 2 MG. The station includes a 10-inch diversion gate and a 24-inch outfall gate. An overflow weir is in a manhole immediately upstream of the station. Flows through the outfall gate and from the overflow are joined immediately downstream of the station in an outfall.

Review of the system suggests that the 24-inch outfall gate in the station is unnecessary since overflows can occur at the immediately upstream overflow weir. To provide more diversion capacity, flows through the existing 24-inch outfall gate and 10-inch diversion gate would be intercepted in a single new 30-inch diversion line leading to the interceptor as shown in Figure 4-17. Fifty feet of new 30-inch line would be required. In addition, a new junction chamber immediately outside the station would be required and the manhole at the junction with the interceptor would need to be re-built. The estimated cost of these improvements is presented in Table 4-32.

TERMINAL 115

A relief overflow from the West Duwamish Interceptor is located near the northern boundary of the Port of Seattle's Terminal 115, and downstream of the W. Michigan regulator. According to King County's hydraulic model, small overflows occur up to 8 times per year. Completion of the conveyance project identified above for W. Michigan will increase overflows slightly at Terminal 115. The combined volume for Terminal 115 and W. Michigan in Design Storm #6 is approximately 0.5 MG. The project identified for control includes a 0.5 MG storage tank in the vicinity of the overflow as shown in Figure 4-18.

The Terminal 115 storage tank could be either in an industrial facility parking lot to the east of West Marginal Way South, or at the site of an old building on the east side of the street. East Marginal Way was re-paved as part of the ETS construction. It is possible that the storage could be provided in a pipeline between the West Michigan Regulator and the overflow site. This would increase the capital cost estimate.

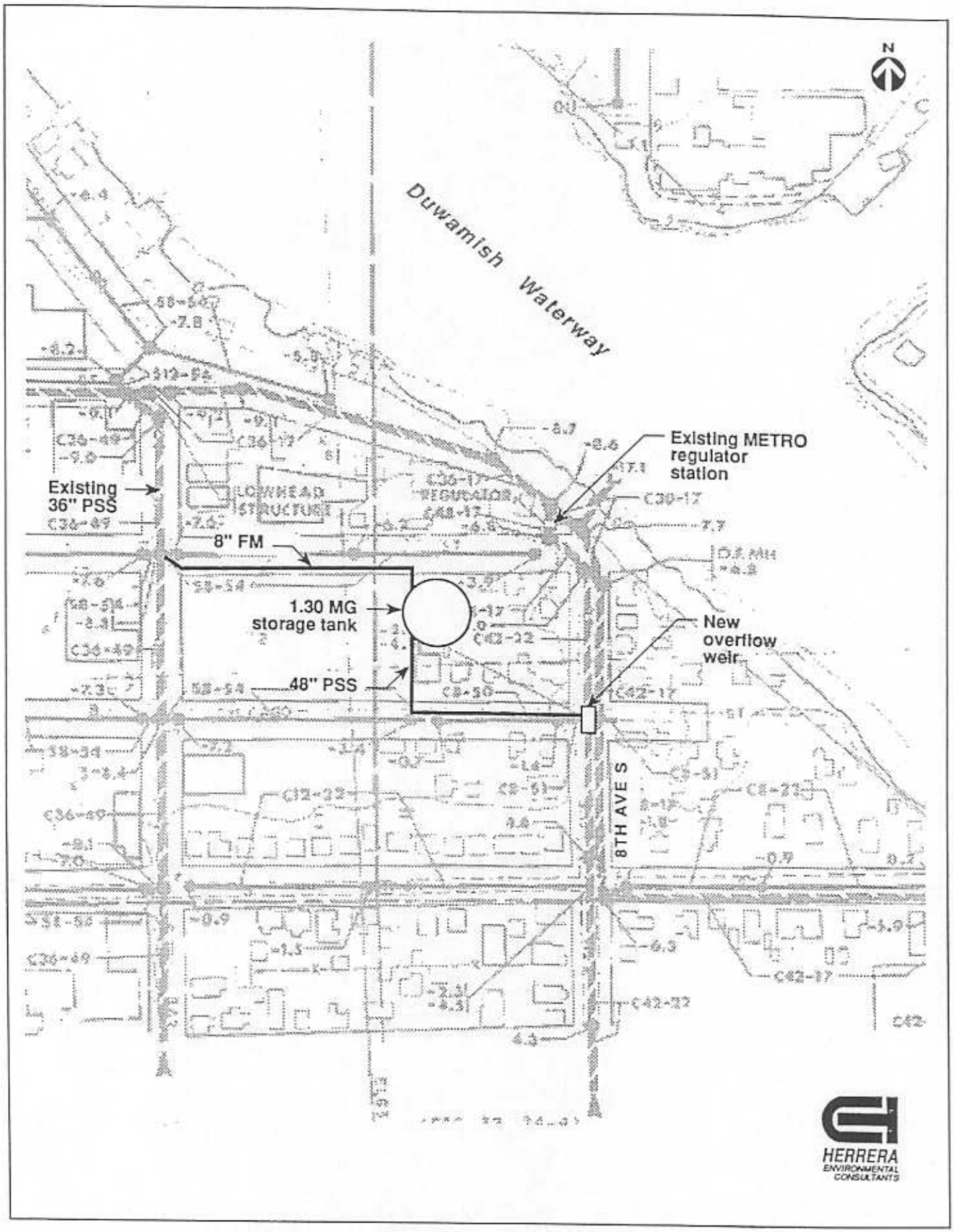

Figure 4-16. Conceptual Layout of 8th Avenue South CSO Control Storage Alternative.

Table 4-32. West Seattle Basin CSO Control Alternatives.

CSO Alternative	Annual CSO Volume, MG	Project Cost, Millions	Unit Cost, $/gallon
Harbor Regulator- Convey to and Store in West Seattle Tunnel	58	$0.75	0.01
Harbor Regulator- Partially Separate- Connect to West Seattle Tunnel	58	$41.3 $0.8 $42.1	0.73
Chelan Regulator- Connect to West Seattle Tunnel- 2 MG storage-	66	$1.4 $8.8 $10.2	0.15
Chelan Regulator- Conveyance to West Seattle Tunnel- 4 MG storage-	66	$1.4 $14.9 $16.3	0.25
Eighth Avenue S Regulator Storage	12	6.2	0.52
W Michigan Regulator Conveyance	2	0.4	0.20
Terminal 115 storage	5	3.5	0.70

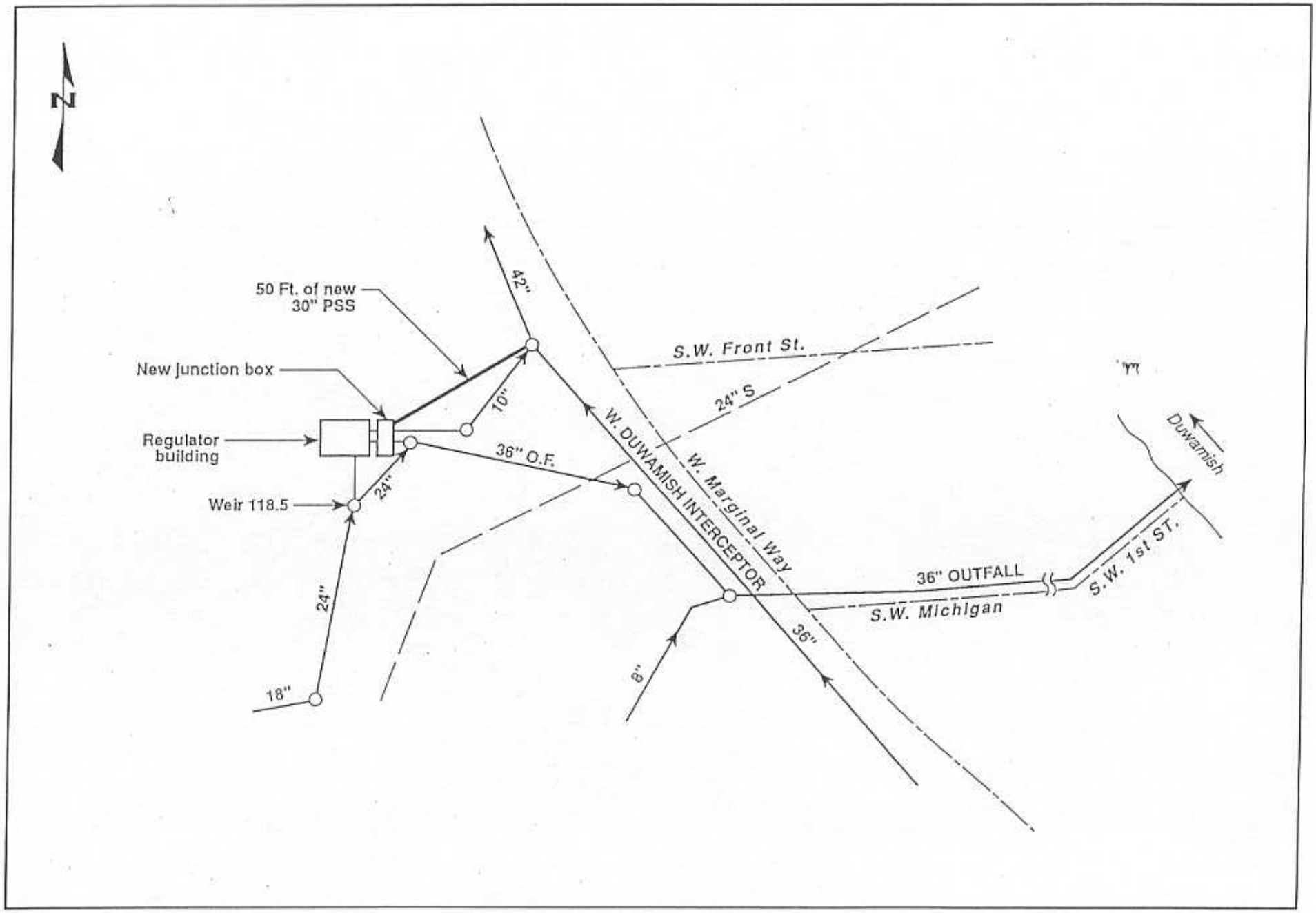

Figure 4-17. Conceptual Layout for SW Michigan Street CSO Control Diversion Alternative.

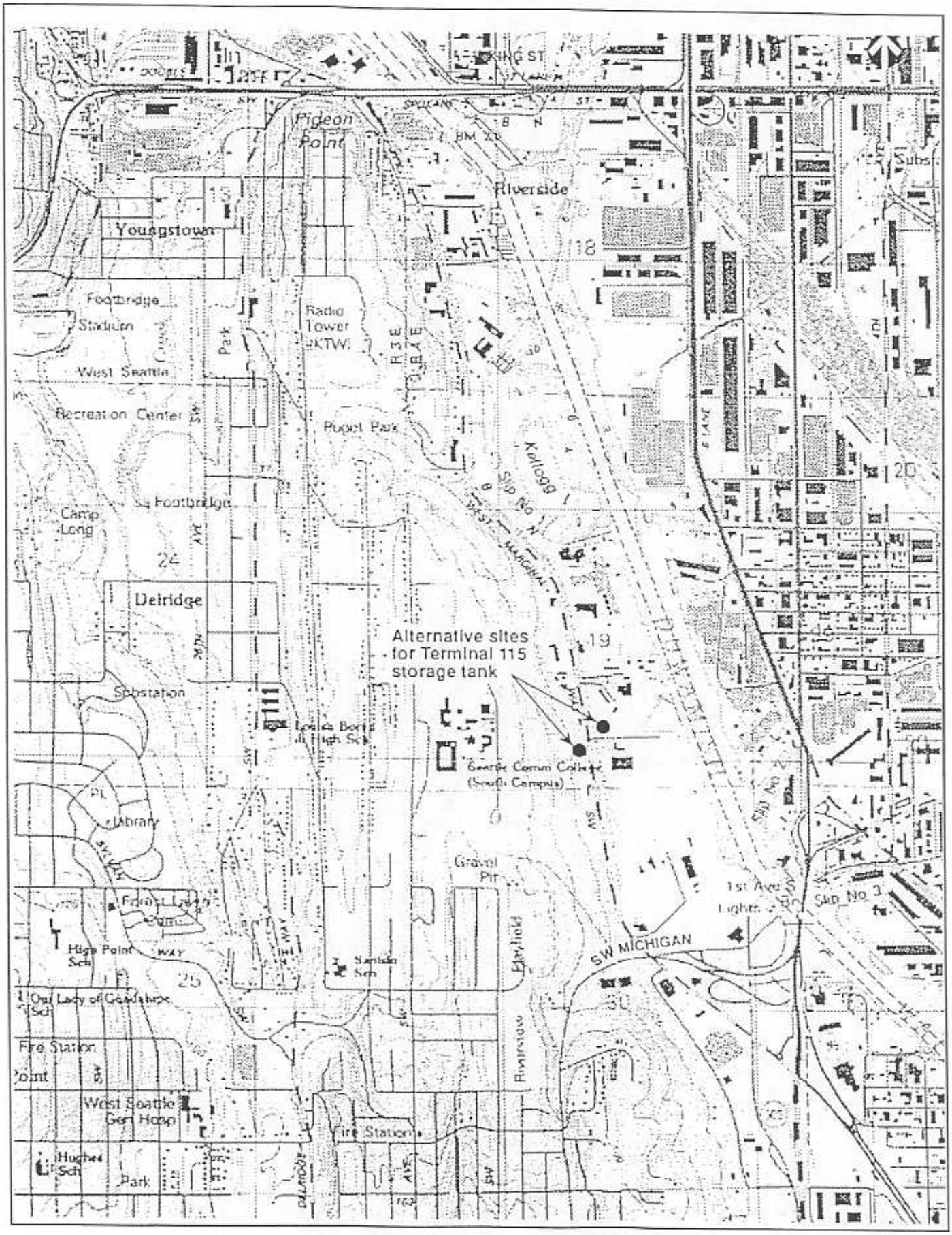

Figure 4-18. Alternative Sites for Terminal 115 CSO Control Storage Tank.

NORFOLK BASIN

This basin includes the Norfolk Regulator, the Martin Luther King (MLK) Way overflow, and the South Henderson Street pump station. Overflows from the MLK Way overflow and the Henderson pump station occur to Lake Washington. The 1998 CSO flows are shown in Table 4-33.

Table 4-33. Norfolk Basin CSO Existing Conditions.

CSO Name	Annual 1998 Volume MG	Storm #5 1998 Volume MG	Storm #5 1998 Peak Rate mgd	Storm #6 1998 Volume MG	Storm #6 1998 Peak Rate mgd
Norfolk	6	0	–	0.7	13
MLK Way	88	5.3	NA	6.2	63
South Henderson PS	10	0.4	NA	1.0	5

The Norfolk Basin CSOs have been the subject of recent pre-design studies by King County. That work is continuing and additional calibration data for the King County hydraulic model are being gathered. The alternatives described here are presented to document alternatives carried in the Task 5 report and the RWSP Service Strategies. The recent work should be referred to for current information. CSO control alternatives examined here include separation, storage, and pumping and conveyance. The estimated project costs for the CSO control alternatives in this basin are shown in Table 4-34.

Table 4-34. Norfolk Basin CSO Control Alternatives.

CSO Alternative	Annual CSO Volume, MG	Project Cost, Millions	Unit Cost, $/gallons
Norfolk A:			
MLK Storage (6.2 MG)	88	$28.6	0.33
S Henderson Storage (1.25 MG)	10	8.2	0.82
Norfolk Storage (0.75 MG)	6	4.7	0.78
Total	104	$41.5	0.40
Norfolk B:			
MLK Storage (6.2 MG)	88	$28.6	0.33
S. Henderson Weir Adjustment	10	1.4	0.14
Norfolk Storage (1.4 MG)	6	8.0	1.46
Total	104	$38	0.36
Norfolk C:			
MLK Storage (6.2 MG)	88	$28.6	0.33
S Henderson Separation	10	4.2	0.42
Norfolk Storage (0.75 MG)	6	4.7	0.78
Total	104	$37.5	0.36

MARTIN LUTHER KING WAY OVERFLOW

The MLK Way overflow has a tributary area of about 1,019 acres all of which has been partially separated. Based on calibration of King County's model, however, the basin behaves as if only 44 percent of the area were partially separated. The estimated annual overflow volume at this location is 88 MG/year with a once per year overflow of 6.2 MG.

Storage Alternative

The storage alternative would consist of a 6.2 MG storage tank in the power line right-of-way adjacent to MLK Way near South Henderson Street as shown in Figure 4-19. Flow would enter this tank by gravity from a new overflow control structure constructed on the trunk sewer. The tank would be drained by a 6.2 mgd pump station to the Henderson Street trunk sewer as capacity becomes available. Detailed analysis may require that this volume be modified depending on the solutions chosen for the Henderson pump station and the Norfolk regulator. Detailed preliminary engineering for this alternative is being prepared under a separate contract.

Separation Alternative

Based on the simulated response of the system, it is possible that not all the area was connected to storm drains, large areas on private property may not be connected, cross connections between the storm and sanitary sewers exist, or that the rooftop drainage and leaky side sewers are contributing inordinate flows to the system. Preliminary estimates suggest that if the infiltration/inflow response of the tributary basins were reduced to what is normally expected in a partially separated system, overflows at Norfolk might be reduced by 40 percent. This alternative would involve removal of rooftop and area drainage and rehabilitation of side sewers to remove excessive infiltration in the tributary area to the MLK Way overflow. Based on recent findings, it is not possible to specifically define the cost or benefit of further separation activities. It is possible that the cost could be approximately 50 percent of the storage alternative. It is also possible that the combined cost of separation activities together with reduced storage requirements could cost approximately the same as the storage only alternative.

As discussed above for the University, Alki, and South Magnolia systems, an ongoing program of side sewer rehabilitation/rooftop drainage removal, and other opportunities such as storm sewer connections if discovered would significantly reduce storage requirements.

SOUTH HENDERSON STREET PUMP STATION CSO CONTROL ALTERNATIVES

The South Henderson Street pump station is near the shore of Lake Washington at the foot of South Henderson Street. The tributary area is partially separated except for a small portion (approximately 5 percent). The observed average annual overflow volume is 10 MG with a once per year volume of about 1.0 MG. Overflows have been observed to occur over prolonged periods (up to 6 days) coincident with prolonged periods of rainfall. This behavior is indicative of excessive infiltration into the sewers in addition to the direct inflow from connected rooftops. CSO control alternatives include separation, storage, and raising the weir at the Henderson Street control structure.

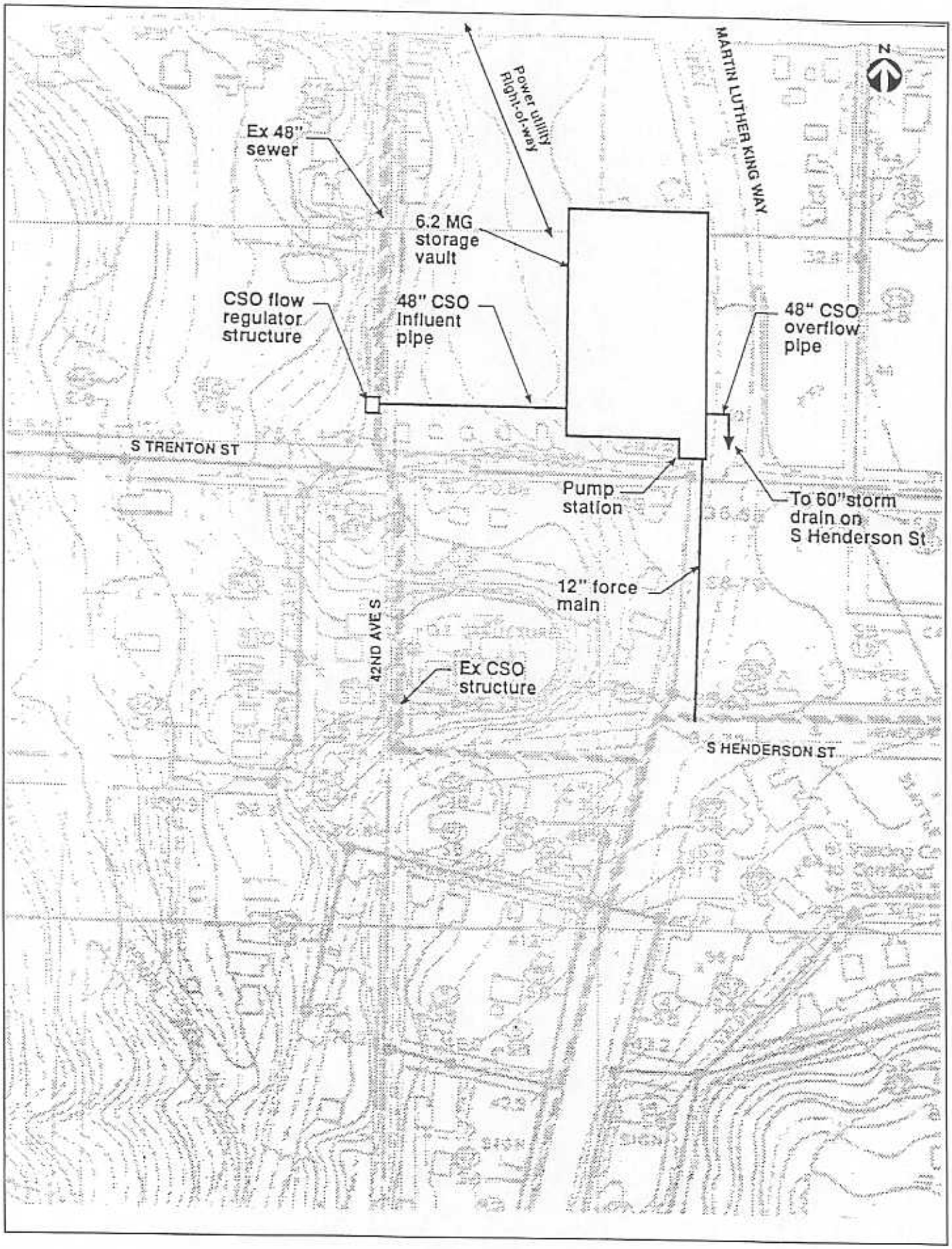

Figure 4-19. Conceptual Layout of Martin Luther King Way CSO Storage Tank.

Storage Alternative

This alternative would involve the construction of an 1.25-MG storage tank, which would possibly be located beneath the parking lot of the Rainier Beach High School, north of Henderson Street as shown in Figure 4-20. Associated features include the modification of the existing emergency relief structure next to Lake Washington, 550 feet of 12-inch gravity sewer, and 550 feet of 8-inch force main. The tank would incorporate a 0.6 mgd pump station. The tank will fill by gravity and will be emptied by the pump station, which will convey flow via the 8-inch force main to the existing King County Henderson Street pump station. This alternative will need to be developed in conjunction with a storage tank at Norfolk, as described below. Alternatives for these sites, as well as the MLK Way storage tank, are being finalized under a separate contract.

Weir Adjustment Alternative

This alternative would consist of raising the weir at Henderson Street to the crown of the 30-inch pipe. This will leave approximately 0.1 MG of overflow at the Henderson Street pump station and will increase the overflow at the Norfolk regulator to 1.4 MG.

The 0.1 MG overflow at Henderson Street would be accommodated by the installation of a 350-foot long, 84-inch diameter pipe along Seward Park Avenue South in the ballpark next to Lake Washington. The storage structure would incorporate a wet well and submersible pumps that would lift the sewage into the existing Henderson Street Pump Station via a 50-foot, 6-inch diameter forcemain.

The overflow at the Norfolk regulator will be stored in a 1.4 MG tank located southeast of the intersection of Norfolk Street and East Marginal Way as discussed below.

Separation Alternative

In this alternative, rooftop drainage from an estimated 1,300 dwelling units in the tributary area would be disconnected from the building sewers and conveyed to the adjacent street in new side sewers. At the same time, the joint of the building sewer at the main sewer in the street and the vertical bend near the surface where the building sewer enters private property would be rehabilitated. These connections are a primary source of infiltration into the system. The estimated project cost per dwelling unit is $3,200. As discussed for the University, Alki, and South Magnolia systems, this could be accomplished in an ongoing program of subsidized, mandatory, or voluntary removal which would open the opportunity to construct a smaller initial facility (e.g., 0.4 MG for 4 per year control).

NORFOLK REGULATOR CSO CONTROL ALTERNATIVE

The current Norfolk regulator overflows will be reduced significantly by the southern transfer of flows to Renton as part of the Alki flow transfer to West Point. After this is completed, it is estimated that the station will have an annual CSO of 6.0 MG and a design Storm #6 overflow of about 0.7 MG.

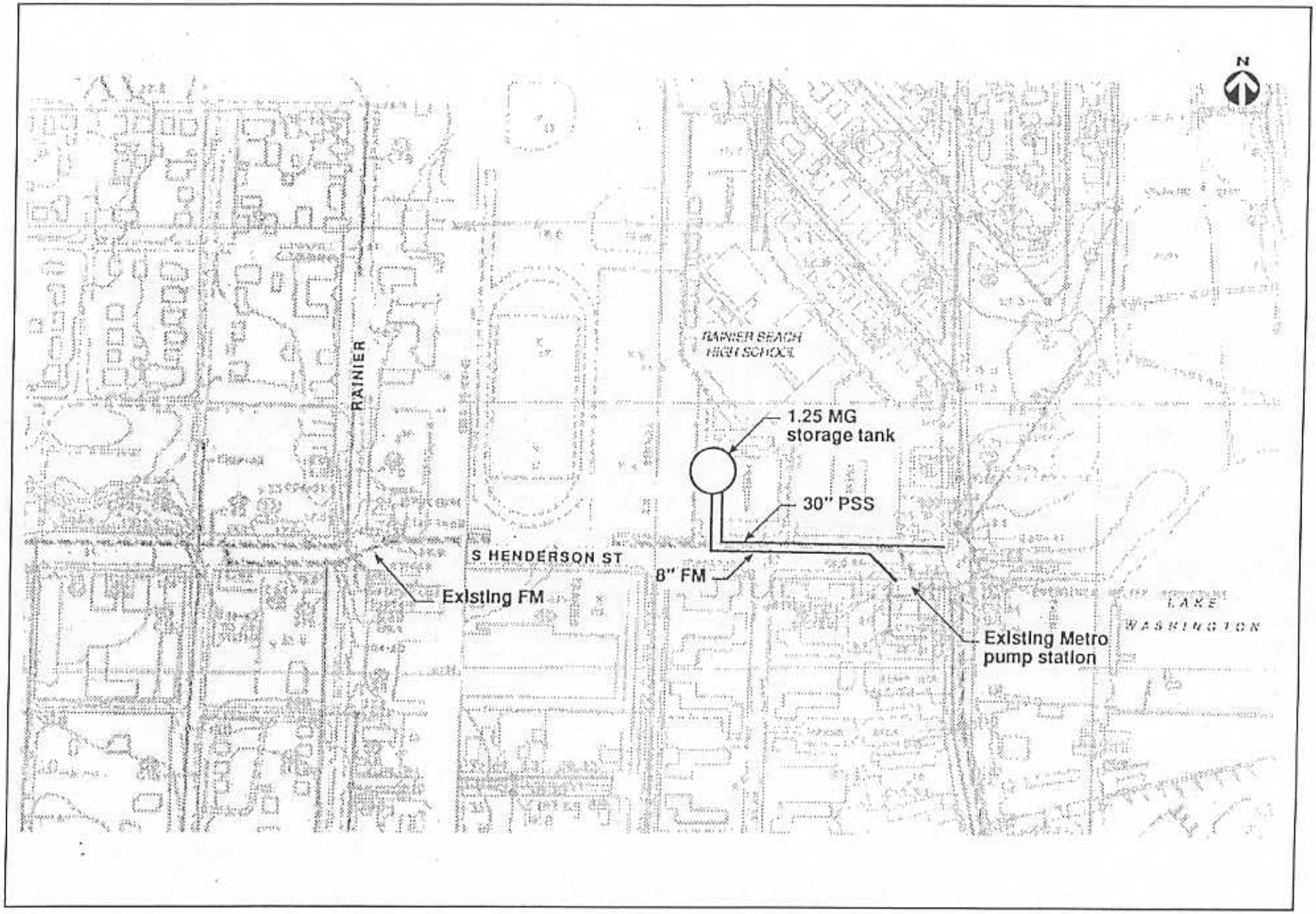

Figure 4-20. Conceptual Layout of South Henderson Street CSO Control Storage Alternative.

Control at the Norfolk regulator must be interrelated with the control method selected at MLK Way and the Henderson pumping station. Provision of storage tanks at these other locations may increase overflows at Norfolk. A careful balance of flows to Renton and to the EBI will need to be examined if storage is selected for the MLK Way and Henderson pump station overflows to avoid additional overflows at Norfolk and other downstream EBI regulator stations. A 0.75-MG storage tank in the vicinity of the Norfolk regulator has been selected as a base for cost estimates to be included with storage at MLK Way or the South Henderson pump station. This will be increased to 1.4 MG if the weir at Henderson Street is raised. Reductions in overflow volume would occur if rooftop drainage and excessive infiltration removal were undertaken in the tributary area.

The existing regulator station north of Norfolk Street would be modified to divert flow through a new 400-foot, 48-inch gravity sewer into the tank. The tank would be equipped with a 0.4-mgd pump station that would pump flow through a 6-inch forcemain into the EBI in East Marginal Way as capacity becomes available. If the tank were expanded to accommodate additional flows from South Henderson, the pumping capacity and forcemain diameter would be increased to 0.7 mgd and 8-inches, respectively. The location of the proposed facility is shown in Figure 4-21.

NORFOLK PROJECT COMBINATIONS AND COST ESTIMATES

The various alternatives discussed above need to be coordinated in selection because the South Henderson alternative chosen impacts Norfolk. Three combination projects covering the three CSO locations together with associated project costs are presented in Table 4-34.

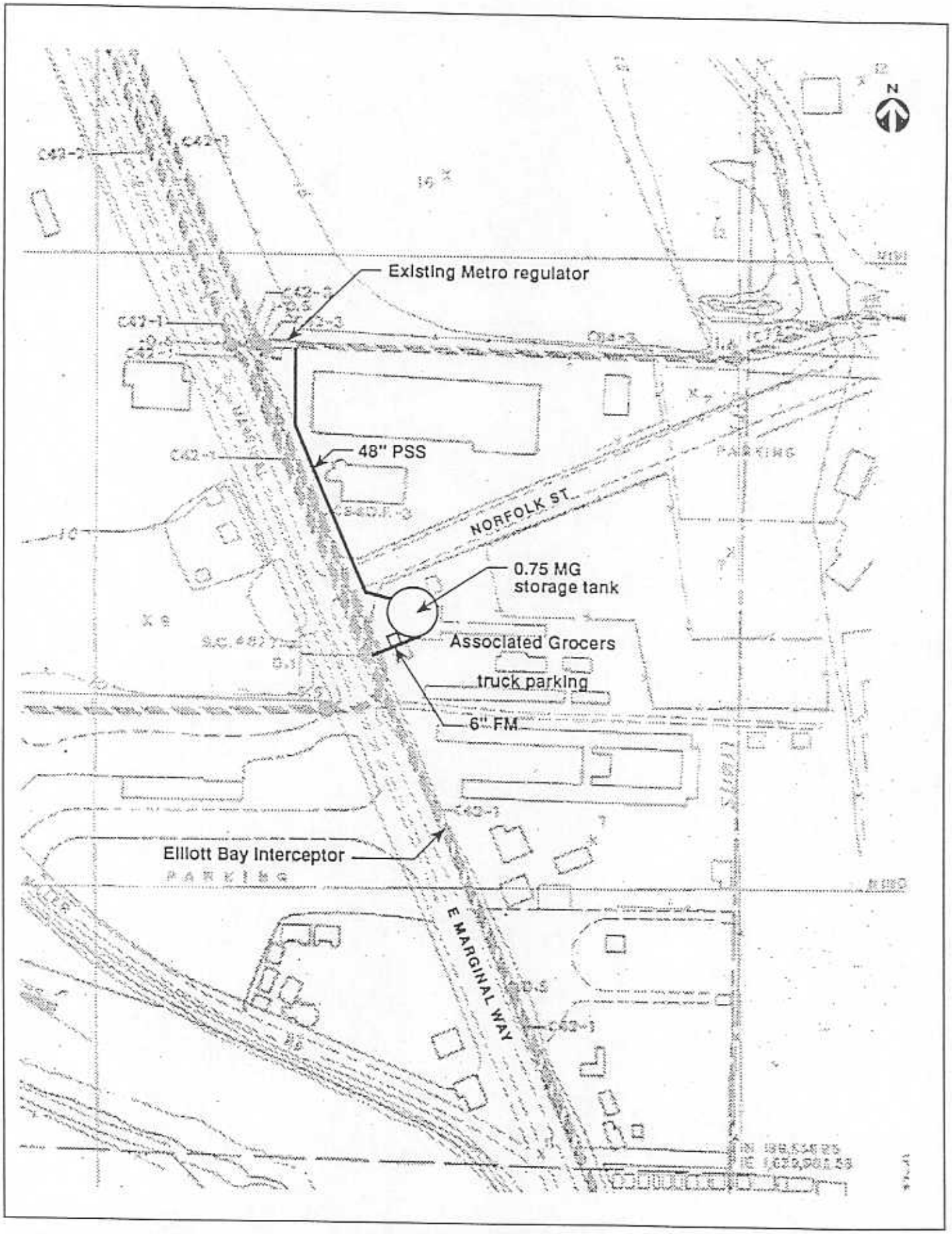

Figure 4-21. Conceptual Layout of Norfolk CSO Control Storage Alternative.

NORTH BEACH PUMP STATION

The North Beach pump station in the Carkeek service area has been shown to overflow several times per year. A predesign study prepared by King County recommends a number of upgrades for CSO control. The recommended improvements would occur in two phases. Phase 1 would consist of the construction of an underground 140,000-gallon storage basin at the site of the North Beach station. Phase 1 would reduce the frequency of overflows from 18 to 4 per year and would reduce the volume of overflows from 1.9 to 1.0 MG per year. Phase 2 improvements would consist of upgrading the existing pump station capacity to 4.5 mgd, replacing 2,060 lineal feet of the North Beach forcemain within Carkeek Park, and making minor modifications to the city of Seattle pipelines. Phase 2 would reduce the frequency of overflows from 4 to 1 per year, and would reduce the overflow volume from 1.0 to 0.2 MG per year. The estimated project cost of this alternative is $3.5 million for a unit cost of $1.75/gallon. The location of the facilities is shown in Figure 4-22.

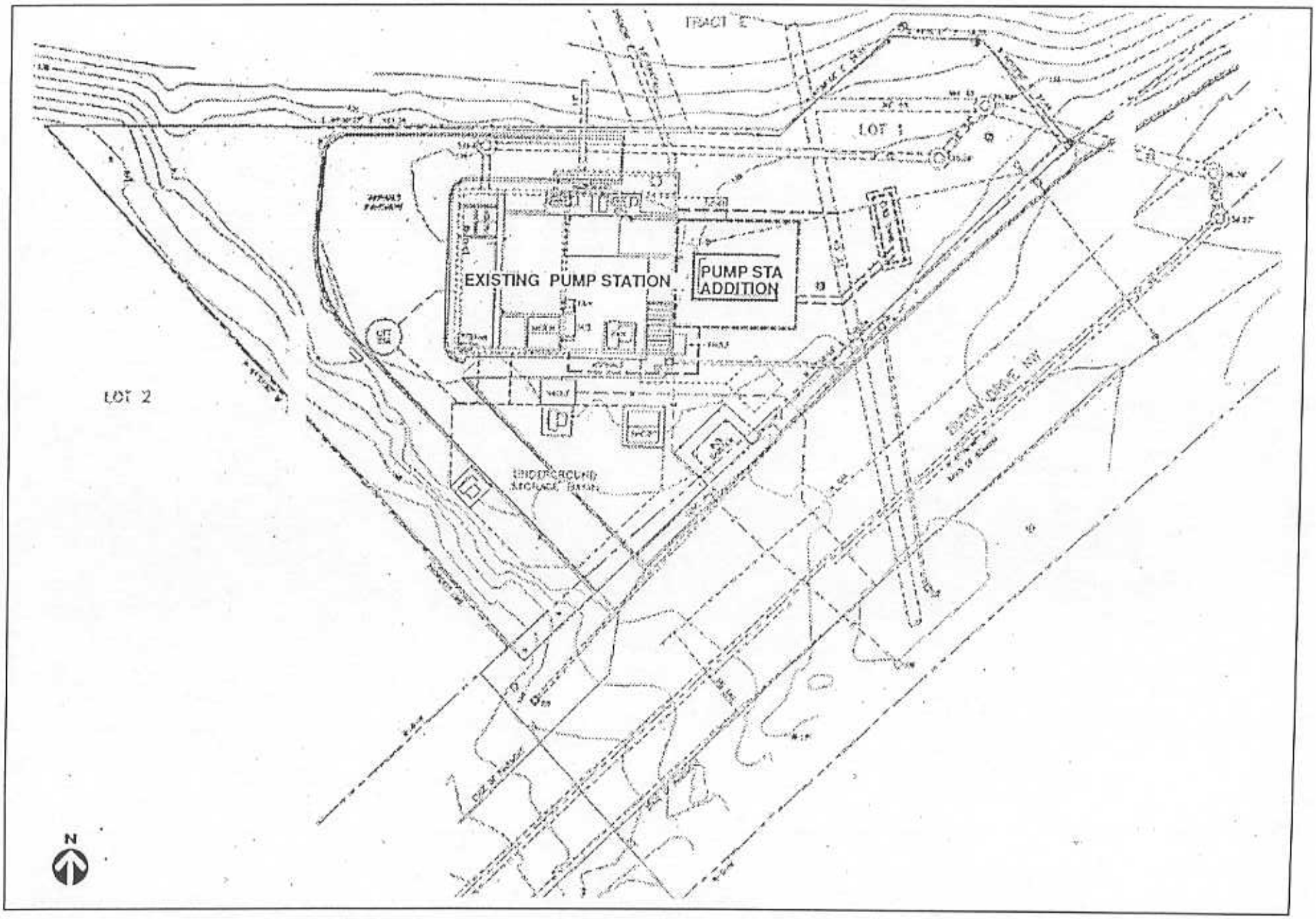

Figure 4-22. Conceptual Layout of North Beach Pump Station Expansion CSO Control Alternative.

CSO CONTROL IMPACT AT WEST POINT AND WEST POINT ENHANCEMENTS

CSO control using storage or CSO treatment will increase flows to West Point. CSO stored in the tanks will be drained back to the interceptor as capacity becomes available. Management of the tank drainage will be an important issue to examine, both to minimize storage tank size requirements and to minimize impacts of high flows at West Point. In development of the CSO control Groups for the Task 5 report, it has been assumed that storage tank sizes required are equal to the overflow predicted for the once per year design storm (Design Storm #6). Further, it has been assumed that after filling completely, these would be drained over a 48-hour period, and that drainage would not begin until after the storm has passed. If drainage of the tanks began as soon as there were room in the interceptor, there is the chance that drainage from upstream tanks could result in the need for larger tanks further down the interceptors.

The total volume in storage to be returned to West Point (both in storage tanks and treatment structures) following the once per year design storm ranges from 40 MG for the CSO control combinations of Task 5 Groups 1, 2b and 5 to 110 MG for the combination of Groups 1, 2b, and 7a (deep tunnels). If drained during off-peak hours over a period of 2 days, the smaller volumes could be provided with secondary treatment without increasing the peak secondary flow at West Point. The larger volumes associated with deep tunnel storage would need to be drained over a period of 3 days.

Return flow from CSO storage/treatment structures will raise the average flow during wet weather (WWF) and maximum month flow (MMF) at West Point. It is estimated that the annual return to West Point will range from about 900 to 1,500 MG/yr. The annual average flow will thus be increased between 2 and 4 mgd. Assuming that most of the return flow occurs in the wet season (November through April) and that it occurs with the same monthly distribution as rainfall, the estimates of increases in WWF and MMF are shown in Table 4-35. Note that the WWF is the average of all flows (storm and non-storm) during the 6-month period November through April. This is higher than the average wet weather non-storm flow rating of West Point (i.e., 133 or 159 mgd AWWF). The flow increments shown are additive to the 159 mgd West Point design flows as well as the 133 mgd design.

By increasing the general level of flows during wet weather, prolonged CSO return flows could lead to a deterioration in the settleability of the activated sludge in the secondary treatment system. An increase in effluent suspended solids and biological oxygen demand (BOD) could occur as a result. If such periods occur, they can be addressed by chemical addition to the secondary, or by blending of secondary and primary effluent (a portion of the CSO return flow would only receive primary treatment with chemical addition as an option) to some degree.

CSO return flows could increase maximum month solids loading to West Point from 4 to 6 dry tons per day. The impact on the solids handling system is defined, but the relative impact is small.

Table 4-35. Impact of Return Flows from CSO Storage/Treatment on West Point Design Flows.

Task 5 CSO Groups	Annual CSO return MG	CSO increment on WWF mgd	CSO increment on MMF mgd	West Point WWF[b] mgd	West Point MMF[c], mgd
Base case[a]	0	0	0	151	215
1+2b+4	895	4.9	6	156	221
1+2b+5	955	5.2	7	156	222
1+2b+6	1007	5.5	7	156	222
1+2b+7a	1474	8.1	10	161	225

[a] Base case refers to current West Point 133 mgd average wet weather non-storm flow.
[b] WWF is the average of all flows entering the plant including storm-related flows.
[c] MMF is the maximum monthly average flow.

The above issues indicate that there will be some cost associated with CSO return flow from storage/treatment units and that plant enhancements will be necessary to accommodate these flows. There is uncertainty as to the final additions that must be made. After consideration, Mark Poling, Dick Finger, and Bill Burwell agreed on the following approach as representative projects for the West Point enhancements included in the Task 5 report:

1. For the 133 mgd current West Point expansion, assume that the two secondary clarifiers identified for the next expansion will be added to the 133 mgd plant to deal with CSO return flows. This will permit the peak secondary overflow rates to be reduced from 1,500 gpd/square foot to 1,300 gpd/square foot. This will mitigate the difficulties associated with CSO return flows prolonging high flows at the plant. A project cost of allowance of $15 million was added to Task 5 CSO Group 1 to construct these clarifiers.

2. For the 159 mgd expansion or as an alternative for the 133 mgd plant, the same allowance ($15 million) will provide upgrades for CSO return flows. The exact upgrades are uncertain at this time, but might include:

   - Conversion of the existing anaerobic digesters to secondary clarifiers if future solids handling facilities were constructed offsite.
   - Addition of dissolved air floatation equipment or other modifications to the existing primary clarifiers to improve removals at peak flows.
   - Addition of a storage facility to intercept any small overflows that might occur at the influent control structure (plant bypass) as a result of running West Point at 440 mgd peak flow without throttling the Interbay pump station.

   Implementation of a Real Time Control system to provide operators with improved forecasting of inflows to the plant. This could include Doppler Radar to enhance flow forecasting.

ADDITIONAL ISSUES AND PROJECTS

The following section discusses several issues involved with CSO control, and other project approaches that were examined as part of the CSO alternative generation process.

ONGOING COSTS ASSOCIATED WITH SEWER SEPARATION PROJECTS

Source control and other BMPs are required for stormwater separation projects. Metro's Water Resources section has budgeted funds for source control and monitoring of the Densmore and Lander projects amounting to about $60 per acre per year. This does not include catch basin cleaning that will likely be required, or periodic inspection and maintenance of new storm drains (both functions are currently a responsibility of the city of Seattle Drainage and Wastewater Utility [SDWU]). Incorporation of these factors could result in an annual cost associated with separation of about $110 per acre per year. Based on experience in the Lander project, source control efforts can be expected to significantly reduce pollution associated with stormwater separation projects, but do require long-term follow-up programs. However, the annual costs are comparable to that of other options.

IMPACT OF GARBAGE GRINDERS ON CSO PROJECTS

Increasing use of garbage grinders could result in increased loading of floatable materials in the sewerage system. This would include particles of vegetable matter (e.g., lettuce and peelings) as well as additional plastic materials. The CSO Control program must address floatables removal pursuant to the nine minimum controls of the federal CSO policy as well as to protect receiving water aesthetics and possible damage to aquatic species. An increase in floatables due to increased garbage grinder use is not expected to impact what must be done as part of the overall CSO Control Program.

Increased garbage grinder use may increase the biosolids production at the treatment plants. CSO-related biosolids production would increase slightly but would remain a small fraction of the normal treatment plant production. For example, the largest CSO-related raw solids production at West Point (Groups 1 + 7a +2b in the Task 5 report) amounts to about 370 dry tons per year compared to projected thickened raw solids production at West Point in the year 2000 of about 41,500 dry tons per year. CSO related raw solids production is less than 1 percent of the normal on an annual basis.

ROOF DRAIN DISCONNECTION

Partial separation projects in the 1970s and 1980s did not include the separation of roof drains due to the difficulty and expense of working on private property. The early separation efforts were directed at preventing basement flooding rather than CSO control. Additional CSO control by the city of Seattle in these areas was accomplished by adding storage. The city relies on their drainage ordinance to result in roof drain disconnection as properties are re-developed in separated sewer areas. This ordinance is a specific part of the city's CSO Control Program and is referenced in Metro's 1988 CSO Control Plan.

In areas where storm drains were installed in previous partial separation projects, the opportunity exists to further reduce CSOs by removing roof and area drains where cost-effective. Removal of roof drains can in some cases double the volume of rainwater removed from the system and have a significant impact on the size of CSO Control facilities required. Identifying these 'targets of opportunity' should be a part of Metro's CSO planning in areas already partially separated.

Inflow removal by disconnecting roof drains has been successful in other areas of the country. Successful programs for Dallas, Texas; Tulsa, Oklahoma; South Portland, Maine; and Cincinnati and Fairfield, Ohio were reported on in the recent EPA Sanitary Sewer Overflow Conference. In Cincinnati, it is viewed as the most cost-effective program for infiltration/inflow removal in a separate sanitary system. Cost estimates for contracted disconnection work range from less than $1,000 per unit to about as high as $2,500 per unit. A figure of $1,500 per unit is often assumed and is consistent with city of Tacoma experience. Cincinnati has established a program that reimburses homeowners for the cost of removal including side sewer rehabilitation. Cincinnati will reimburse up to $3,000 per unit; actual experience has been about $800 per unit, including a $50 payment to homeowners above their costs to 'sweeten the pot.'

For CSO control, roof drain disconnection programs would be most effective where storm sewers exist, and where the community can be enlisted to assist the program by participating in a removal program. Based on experience elsewhere, a public outreach program coupled with economic incentives may be effective. Community desires to avoid construction of CSO control facilities in their neighborhoods could be part of the impetus as well as reduction in sewer charges and direct payment to property owners. Alki is a notable example where the community activism might make such a program successful. The participation is expected to be increased by offering homeowners reimbursement of expenses plus a small 'grant' to make it worth their while. BMPs in the form of homeowner education programs to decrease the use or modify products used for moss control would be necessary. In addition, roof drains may be a significant source of weathered asphalt from roofing materials and zinc from galvanized downspouts. These contributions would need to be assessed before pursuing roof drain removal as a CSO control technique.

The following paragraphs describe approaches used by other municipalities in addressing infiltration and inflow from private property.

East Bay Municipal Utilities District (EBMUD), California

EBMUD was the lead agency (as wholesaler for wastewater treatment) for an extensive infiltration/inflow analyses and correction program. It was determined that at least 50 percent was attributed to sources on private property. Archeological-like 'digs' were conducted to examine the state of building sewers—virtually every sewer examined had open joints or crushed pipe. Implementation of the correction program is the responsibility of the member communities, and private sources have been addressed in different ways.

The Stege Sanitary District rehabilitated mainlines, manholes, and a relatively small portion of building sewers (less than 10 percent) identified as cost-effective. Building sewers were rehabilitated by the agency at no cost to the property owner on the theory that infiltration/inflow

reductions are a benefit to the whole community. Considerable effort was required to convince some property owners to participate in the program. Overall, Stege achieved a 75 percent reduction in infiltration/inflow.

The city of Alameda passed a city ordinance that requires laterals to be tested and rehabilitated if necessary, when a property is sold. The lateral is tested from the house to the back side of the sidewalk. This approach two major advantages. First, money is available to test and fix laterals, roofs, and termite damage when houses are sold. Second, the program will continue indefinitely. Although this approach delays rehabilitation of many building sewers for many years, it ensures that private sources will actually be corrected. It turns out that the ordinance costs the city a fair amount of money to administer since the city assists homeowners in locating laterals and inspecting tests and new lateral construction. Some of these costs are reimbursed through construction permits.

The other communities that are part of the EBMUD infiltration/inflow program choose not to pursue private lateral infiltration. Generally, infiltration/inflow is reduced about 50 percent by rehabilitating mains, manholes, and the portions of the laterals within the public rights-of-way. In some communities, even these portions of the laterals are privately owned; however, this issue is ignored when an area is being rehabilitated.

Nashville, Tennessee

The city of Nashville undertook a comprehensive rehabilitation of the manholes and mainline sewers in an area subject to severe infiltration/inflow. After completion, it was found that the peak flow rates during heavy rains were essentially unchanged. Further review indicated that private sources, particularly building sewers were the source of these peaks. The city was then going to undertake further rehabilitation to repair the portion of the building sewer in the public right-of-way, between the mainline sewer and the cleanout at the property line. Results have not been reported in the literature.

Vallejo, California

The Vallejo Sanitation and Flood Control District decided after extensive SSES work that at least 70 percent of the building sewers in the highest infiltration/inflow areas had to be rehabilitated. The district decided to rehabilitate these at public expense, including both the public and private portions of the lateral. The district provided a 1-year warranty on the corrected lateral and then turned the lateral back to the property owner for long-term maintenance. The district also established a rebate program for private owners who have repaired or replaced that upper lateral at their own expense. Following the rehabilitation, covenants were added to the property deeds stating that if further rehabilitation were found to be necessary by future inspections, that the cost would then be born by the property owner.

North Tahoe Public Utility District, California

The North Tahoe Public Utility District instituted a mandatory lateral inspection program in the late 1980s that is connected to the sale of a home. Where a home is sold within 1 year of a test no additional testing is required. If the lateral is found to be defective, the seller is required to

repair and pass an air test on the lateral. Funding is either through escrow or paid directly by the property owner. Initial reaction from the real estate community was that the testing would hurt sales. Since the program has been in effect their was no discernible change in property value or sales that can be attributed to the lateral testing ordinance.

Tacoma, Washington

The city of Tacoma has an ongoing program to eliminate roof connections. This program is conducted by city staff. A specially equipped van was purchased and outfitted with pipe, a turf cutter, a trencher, a concrete saw, and other equipment. As time allows within other sewer maintenance priorities, a special crew undertakes rooftop disconnection, including the initial informational contacts with property owners. The roof leaders are intercepted with plastic pipe routed to the nearest street for drainage disposal. Cuts are made in sidewalks and curbs as necessary and then patched. The reported cost for this program ran about $1,400 per dwelling unit in 1995.

Portland, Oregon

The city of Portland Bureau of Environmental Services (BES) is currently targeting 20,000 residences for voluntary downspout disconnection. The goal is to disconnect at least 50 percent of the roof area in the target zone, making simple modifications to downspouts which can be safely routed to yards. BES provides financial incentives ($53 per downspout) for homeowners who do the work themselves. Homeowners can also opt to have BES complete the work free of charge. BES employs both private contractors and local community groups to do the work. There is a strong emphasis on public involvement; the program pays local organizations for their work canvassing and doing disconnections. The program is in its second year and has completed approximately 20 percent of its goal. The average program cost per downspout disconnected (including administrative costs) is about $150.

BES is also targeting 2,500 residences for mandatory disconnection in five sewer basins where at least 75 percent of the roof area must be disconnected from the combined sewer to meet CSO control goals. Downspouts are disconnected to surface drainage systems. In some cases, gutter modification is required. As in the voluntary areas, homeowners can opt to have BES do the work at no charge, or to do the work themselves and receive reimbursement of $53 per downspout disconnected.

Scarborough, Ontario, Canada

The city of Scarborough began a voluntary program for roof leader disconnection in June 1994. The program was started using students hired under a Canadian federal grant to educate the public on the program and its benefits. The students made visits to residences to explain the program, obtain background information, and leave brochures.

Where feasible, residents who offered to participate were offered the basic materials required to perform the work. This included piping, splash pads, and plastic rain barrels. Residents were responsible for the actual work. As of June 1997, more than 260 residences had participated. Another two summers of contact activities are planned to cover the entire combined sewer area.

Macomb County, Michigan

The Detroit News reported that Macomb County began a program of inspecting residences to enforce a roof drain ordinance. Inspectors walk the streets visually checking for improper drainage. Residences found with roof drains connected to the sewage system were notified that they had 30 days to comply with the ordinance (disconnect or extend the roof leader). Violations could result in fines ranging from $40 to $500.

The ordinance covers roof drains that discharge within 5 feet of the building envelope as well as those directly connected to the sewer. Drains to close to the house or yard grading that leads water back to the building line are covered to prevent water from discharging on the ground from reaching the sewer indirectly via draining down the basement wall or in the crawl space.

MODIFICATIONS IN STREET CLEANING PRACTICES

Street sweeping has been variously cited as a significant and not significant practice to reduce stormwater pollutant content. U.S. EPA paper studies have suggested that street sweeping up to 10 times per year would be cost-effective as a BMP. A paper analysis in Portland suggests that the ability of street sweeping machines to remove the fraction of street dust actually containing the major pollutant fraction is limited. Sweepers tend to remove the larger particle sizes leaving the fine dust to either fall back to the street after the sweeper has suspended it in the ambient air, or leaving it trapped in the small crevices that exist in street surfaces. Street sweeping in the fall ahead of significant rain may be of particular benefit to remove leaf litter and accumulated dust from the dry period.

Street sweeping is most effective in commercial core areas where street parking is limited in the evening. In high density residential areas, the presence of vehicles at the curb at any hour limits the coverage that can be achieved. Street sweeping is a useful BMP to control litter (floatables) and to assist in control of street dust that enters stormwater runoff. However, it should not be viewed as a significant control mechanism.

All of the approximately 30,000 catch basins in the city of Seattle are connected to a common trap manhole, which functions to hold solids and floatable materials, and oil and grease. These are emptied on a varying schedule by the SDWU. SDWU inspects each of these on an annual cycle and cleans them when trapped solids approach 50 percent of the holding volume available. Actual cleaning frequency is about once each 5 years on average. The liquid and solids are separated in centralized facilities with the liquid discharged to Metro and the solids and floatables disposed of in landfills. The effectiveness of such programs in pollutant removal is uncertain. Paper studies in Portland suggest that cleaning on an 8-month cycle could achieve very high removals of pollutants from stormwater. Other studies have suggested only modest removals. The material trapped is generally the coarser fraction of the solids, which may contain a small fraction of stormwater pollutants. The SDWU program focuses the cleaning efforts on catch basins that accumulate solids at the most rapid rate--some of these are cleaned on an annual cycle where historical experience indicates a problem. This is an appropriate approach. Little evidence exists to suggest more frequent cleaning cycles would be cost-effective.

A BMP program might be better focused on specific pollutants that drive the WQA results rather than the broad spectrum as addressed by street sweeping or catch basin cleaning. Thus, if silver were a major contributor to high water quality/sediment indices in the WQA, then a focused program to reduce silver concentrations in commercial or industrial effluents (air and water) , and to identify and reduce stormwater sources would be the most beneficial approach. Silver concentrations are a significant contributor to the computed WQA indices, and recent silver concentrations measured in Denny CSOs exceed the value used in the WQA calculations. Zinc is contributed by highway runoff and may be associated with galvanized metal downspouts. Programs to encourage alternatives such as plastic downspouts may be appropriate.

WEST POINT BYPASS AS A CSO DISCHARGE LOCATION

The emergency discharge outfall at the West Point plant is listed among the CSOs in the NPDES permit. As a CSO, its baseline is zero events per year and zero annual volume. Increased discharge above baseline is prohibited by state CSO regulations. This outfall's intended use was described to stakeholders (including the city of Seattle, Corps of Engineers, Department of Natural Resources, and the tribes) during the construction permitting as limited to emergency bypass discharges associated with mechanical or electrical failures at the plant to prevent severe damage to equipment and loss of life. Such a bypass is not a permitted discharge in the NPDES permit (it must be reported immediately to Ecology and other agencies). The circumstances of each bypass will be reviewed after the fact by Ecology for any needed enforcement action. This is in contrast to the CSO reporting system where discharges are reported in an annual summary report with which Ecology assesses compliance based on decreasing frequency and volume of discharge compared to each site's baseline, and timely progress toward the regulatory goal of 'greatest reasonable reduction' (one discharge per year per outfall).

The current NPDES permit renewal application expands upon the above expectations. There are concerns that West Point may not be able to accept the peak flow of 440 mgd in situations where there is a sudden and rapid rise to that flow. These conditions may trigger a computer-controlled plant shutdown in which all plant flow would be bypassed during the time it takes to get the plant operating again. Such a shutdown is designed into the system to protect against severe damage to the plant and danger to workers. One way to avoid these potential shutdowns is to throttle flow at the Interbay pump station so that the peak flows to West Point are limited to about 400 mgd. This increases discharge into Elliott Bay, especially at Denny Way, but reduces discharges along the Ship Canal. Another alternative under consideration is to use the emergency outfall for 'peak shaving' wherein some of the flow from sudden and rapid peaks would be diverted out this outfall as necessary to permit the plant to assimilate the 440 mgd peak avoid plant shutdown. More flow would likely reach the plant under this alternative than would with a limit on the peak of 400 mgd. The peak shaving approach is being considered in current NPDES negotiations.

Analysis suggests that the tradeoff in CSO discharge volume is about equal system-wide for the two alternatives discussed above. Using the West Point bypass for peak shaving would result in an annual discharge at this location of about 90 MG/yr and an increase in Ship Canal discharges of about 33 MG/yr, for a total of 123 MG/yr. At the same time, additional Elliott Bay Interceptor (EBI) discharges of about 116 MG/yr (96 MG/yr at Denny Way after construction of the preferred Denny Alternative) would be avoided. If the West Point peak flows were limited to

400 mgd on the other hand, EBI discharges would be increased about 116 MG/yr while Ship Canal discharges would be reduced and discharges from the emergency bypass would be minimized (these increases in Elliott Bay or the Ship Canal would not cause annual discharge volumes to exceed baseline values). Thus, use of the emergency bypass to facilitate acceptance of 440 mgd peak flows at West Point as Metro committed to would result in a small increase in the system-wide annual CSO volume after the Denny project is in place. In addition, it would result in greater frequency and volume of discharge to the site near the emergency outfall where Metro has planted eel grass as mitigation for the West Point project. Through the RWSP and work with the stakeholders to the West Point construction permitting, Metro needs to address the relative benefits of these two approaches. Ecology and other stakeholders would need to accept reducing the peak flow limits to 400 mgd from 440 mgd or the peak shaving concept for future operations.

If CSO treatment at Denny is included in final RWSP configurations, it is logical to assume a 400 mgd peak flow limit at West Point. Resulting discharges from the Interbay pump station would receive primary treatment at Denny rather than West Point, Ship Canal discharges would be reduced, and discharges from the emergency outfall would be minimized. There is also the potential to reduce 3rd Avenue West CSOs by treatment at Denny.

Consideration has also been given to more frequent use of the emergency outfall as a component of the CSO program. This would move discharges from a theoretically more sensitive receiving water (the Ship Canal) to the nearshore area off West Point. By opening the discharge gate structures, the level in the influent tunnels could be lowered allowing some additional flow to reach the structure from the North Interceptor, particularly from 3rd Avenue West and the Ballard regulator. This represents a transfer of CSO and not control. The sensitivity of the alternative locations has not been compared. An assessment of the resulting CSO volumes and frequencies (as well as the impact on the ability to pump 440 mgd through the plant) has not been made. This proposal in not included in the current NPDES permit application.

WEST POINT SECONDARY CLARIFIERS USED FOR CSO TREATMENT

Two additional 142.5-foot diameter secondary clarifiers are scheduled to be added at West Point when the plant is upgraded from 133 to 159 mgd AWWF capacity. The question has been raised about installing these early to be used for treatment of additional CSO above the 440 mgd design point. Together, these clarifiers could treat over 100 mgd of additional CSO flow if operated in excess of 3,000 gpd/square foot (total peak flow to West Point of 540 mgd). Together, CSOs at 3rd Avenue West, Ballard regulator, and 11th Avenue NW produce a combined peak discharge rate of about 63 mgd. The following considerations apply to this approach:

1. The internal sludge removal mechanisms that would likely be used for primary CSO treatment are fundamentally different than those that would be used for activated sludge. Thus, the mechanisms would likely have to be completely changed out when the clarifiers were converted to use in the upgraded secondary plant.

2 The plant hydraulic structures would need to be modified to use these clarifiers in this application. A separate new pump station would be needed to deliver CSO

flows from the influent tunnel to the clarifiers. A new effluent pump station might also be required to discharge treated effluent. Because the existing outfall would not be capable of accepting flows above 440 mgd, this discharge is assumed to occur out the emergency outfall. Discharge to this location may damage eel grass planted as part of mitigation for the West Point project as discussed in the previous topic.

3. Increasing the flows to the plant above 440 mgd will require that a new parallel relief sewer be provided from the 3rd Avenue West overflow structure to the bifurcation structure at the upstream end of the two existing tunnels. At the same time, new siphons under Salmon Bay could be installed to deliver overflow from the 11th Avenue NW and Ballard regulator overflows. The facilities and approximate costs are shown in the following table. The total cost for this approach is about 80 percent higher than that of the storage tanks identified for these CSOs in Group 2b.

4. After conversion of the two clarifiers to secondary treatment use, the relief sewer could be used to convey additional flow to the plant for discharge via the emergency overflow (see previous discussion of this topic), or would provide storage of about 1.8 MG (sufficient for 11th NW). Additional costs would be necessary for control at Ballard and 3rd Avenue West.

Current projections in WW2020+ have the West Point upgrade to 159 mgd occurring as early as 2010. In these scenarios, the new clarifiers for CSO treatment would only be available for about 5 years (2005 to 2010). The dollars to take advantage of these clarifiers for CSO treatment would be largely lost after only a brief period of use. Other WW2020+ alternatives could delay the secondary upgrade to 2020 or later. Given the above considerations, use of these clarifiers for CSO treatment is not particularly attractive.

Table 4-35. Capital Costs to Use West Point Clarifiers for Additional CSO Treatment.

Facility	Project Capital Cost, $million
12,000 ft of 60-inch relief sewer from 3rd W.	63.9
1,400-ft of 48-inch siphon to 11th NW	6.2
New regulators at 3rd W. and 11th NW	1.4
Influent pump station (63 mgd)	8.4
Two clarifiers--present worth difference for 5 year acceleration of construction	6.0
Replace clarifier internal mechanism	2.0
Total	87.9

SEASONAL DISCHARGE TO THE DUWAMISH RIVER

CSO Group 3b in the Task 5 report combines CSO primary treatment with a new secondary treatment plant in the WW2020+ alternative D1. A stand-alone version (3c) is also included that

provides centralized primary treatment of CSO flows from the Lander CSO south. In both cases, a new outfall to Puget Sound is included in the cost estimates. The CSO program estimate for the outfall capital cost (102-inch including CSO flows) is $51 million. To reduce capital needs early in the program, consideration has been given to joint use of the existing EDRP Effluent Transfer System (ETS) outfall. The WW2020+ secondary plant in alternative D1 would treat up to 80 mgd of flow (2.25 times AWWF). Peak CSO flows would add up to 140 mgd through 2025 for a total outfall flow of 220 mgd. The existing ETS capacity is on the order of 350 mgd. If the Duwamish peak flows were pumped to the existing ETS for disposal, there would be a remaining allowance of 130 mgd for EDRP flows. EDRP flows in excess of 130 mgd would be discharged to the Duwamish River via the old outfall or a new short outfall near the river mouth. Flows discharged to the river would receive secondary treatment at the EDRP.

The foregoing configuration has water quality and structural facility implications. Because the ETS structural strength is low near the outfall, special surge protection measures would be needed to avoid structural damage to the pipeline. Discharge to secondary effluent at the EDRP has water quality issues. Review of the plant flows and the historical river flows indicates that river flows will not usually be high when these discharges would occur. Initial dilution of the effluent in the river would thus be restricted. The water quality impacts of these discharges are being reviewed in the WQA. It is expected that ammonia toxicity may be a problem. The frequency and more importantly, the periods when such discharge would occur, will be important considerations. Discharge after about the middle of February will probably not be acceptable due to use of the estuary by Salmon fry. It is anticipated that discharges to the river at the EDRP would need to be dechlorinated.

This approach has merit in reducing the rate of capital expenditures by delaying a new outfall for the Duwamish plant, or a parallel of the ETS. There is insufficient information available to completely characterize the impacts of this alternative. The feasibility will depend on the rate of increase in flows at the EDRP and thus the WW2020+ alternative configuration considered. Water and sediment quality impacts are currently being estimated in the WQA. This concept was presented to Ecology in 1994. Their first reaction was that it is not out of the question, but that a secondary outfall for excess EDRP flows to the mouth of the estuary would be needed. This could involve addition of 9,000-ft of new 84-inch outfall from a new connection of the Duwamish plant outfall with the ETS to just outside the mouth of the estuary. This line could have a capital cost of up to $34 million.

CSO Group 4 includes a WW2020+ transfer of up to 80 mgd from the West Point SSA to the EDRP. This is a secondary treatment transfer and the option to associate seasonal discharge to the river would be subject to cost considerations in the WW2020+ alternatives. The frequency of discharge may be less than discussed above, but the same considerations apply.

NEW TECHNOLOGIES

Conventional CSO control technologies consist of storage separation and treatment in primary sedimentation like structures. Alternative technologies that have been used are discussed below.

Vortex Separators

Vortex separators are a technology that uses vortex motion in circulating fluid to assist the gravity settling of suspended solids. Studies elsewhere have indicated removals of TSS above 50 percent at loadings above 7,000 gpd/square foot. By comparison, primary sedimentation has required overflow rates on the order of 1,000 gpd/square foot to achieve 50 percent suspended solids removal.

Metro decided to conduct a pilot study of this technology at West Point and Denny Way based on the potential for this technology to provide both capital cost savings and operational simplicity. The West Point tests indicated 50 percent removal of TSS or greater at surface overflow rates of 4,000 gpd/square foot or less. Removals at West Point would be higher than would be expected in actual CSO conditions because the influent suspended solids were generally above 200 mg/L. At influent suspended solids concentrations representative of CSOs (100-150 mg/L), 50 percent TSS removal would be expected at 2,000 gpd/square foot. Due to a number of factors, the pilot plant was operated on only a single event after it was moved to Denny Way. The surface loading in this event was in excess of 9,000 gpd/square foot (a range where little TSS removal would be expected based on the West Point experience).

The CSO Control Groups containing CSO treatment have been developed assuming vortex separation operated at peak overflow rates of 7,200 gpd/square foot. The pilot studies and literature indicate that chemical addition will be required at the surface loading rates assumed in cost development to achieve Ecology's 50 percent TSS removal and 0.3 mL/L/hr settleable solids discharge standards for both vortex separators and primary sedimentation units. At higher surface loading rates, even chemical addition might not achieve the removal standard due to low influent TSS concentrations (less than 100 mg/L). If the permits can be written in terms of an agreed on effluent concentration, the chances of meeting the limits will be improved.

Microsep or Actiflo

This is a proprietary technology that uses a mixture of very fine sand and polymers in plain sedimentation units. The polymer is used to flocculate wastewater solids and attach them to the sand particles. The high specific gravity of the sand increases the settling velocity of the resultant particles so that plain sedimentation units can be operated at very high surface loading rates while achieving high solids removal.

The sand must be separated from the solids for recycling and to keep it out of the sewers. It is not know how effectively the sand can be removed, but this has been expressed as a concern. If the sand is not effectively separated prior to sending the solids back to the sewers, heavy deposits may form in the interceptors. Some experience with this technology exists in western Canada and is also marketed by Kruger. The vendor has a fully equipped pilot plant trailer available for rental.

Fine Screens

Fine screens have been applied for CSO treatment in some areas. These devices will principally remove floatables and larger solids. Experience varies and expectations are for relatively low

suspended solids removal. Recent experience on sanitary sewers in Deerfield, Illinois reported on at the U.S. EPA SSO Conference indicated effluent TSS concentrations of 60 mg/L may be achievable. The reported experience did not indicate the influent TSS concentration. In general, attainment of 50 percent suspended solids removal should not be expected.

Direct Filtration

This technology involves high rate filtration of CSO flow using shallow bed granular filters or new technology know as the fuzzy filter. Good performance on primary effluent (TSS concentration near that of CSOs) has been reported. Metro tested this technology briefly at Alki in the 1980s. Brown and Caldwell has tested this technology for attainment of secondary effluent standards on aerated lagoon effluent. TSS removals of 50 percent and minimal settleable solids concentrations have been reported at surface loading rates up to 7,200 gpd/square foot or greater with chemical addition. Commercial units have built in cleaning systems that reduce operator attention. The units would be preceded by fine screens or other mechanisms to remove debris. However, compared to primary sedimentation or vortex separators, this technology is significantly more complex.

Dissolved Air Floatation

Dissolved air floatation (DAF) has been demonstrated for treatment of wet weather flows in Oregon. The U.S. EPA sponsored full scale testing in the 1970s. DAF technology with chemical addition is also being added to vortex separators in designs for Columbus, Georgia. Performance in pilot tests has been excellent. Again, this is a complex process by comparison to the basic vortex separator or primary clarifier.

APPENDIX A

Duwamish Basin CSO Control Alternatives

Offline Storage Tanks
Separation and Storage
Onsite CSO Treatment
Flow Transfer to EDRP at Renton

Drainage Basin: Industrial

CSO Control Alternative: Below Grade Circular Tank Storage

Location: Hanford @ Rainier

ENR 5630 for estimate

Sizing: 0.5 MG

Item Description	Quantity	Unit	Unit Cost	Total Cost
Concrete	930	CY	$372.6	$346,500
Temporary Sheeting and Shoring	13,180	SF	$11.0	$144,980
Excavation	8,450	CY	$14.0	$118,300
Backfill-Native	814	CY	$9.0	$7,326
Backfill - Imported	3,256	CY	$29.0	$94,424
Disposal of Excess Excavation	7,636	CY	$10.0	$76,360
Piling	7,200	LF	$16.5	$118,800
Sluice Gates	1	EA	$10,000.0	$10,000
Drainage Pumps and Assoc. Mech./Elect. Equip.	1	LS		$59,426
Street Restoration	0	SY	$0.0	$0
Utility Interference/Relocation	500	SY	$50.0	$25,000
Specialty Items				$0
			Subtotal	**$1,001,116**
Miscellaneous Mechanical/Washdown System	1	LS	3.0%	$30,033
Aeration	0	LS	0.0%	$0
Landscaping	1	LS	1.5%	$15,017
Odor Control	1	LS	5.0%	$50,056
Traffic Control	1	LS	$50,000	$50,000
Dewatering	1	LS	2.5%	$25,028
Mobilization/Demobilization	1	LS	10.0%	$117,125
Contractor's O & P	1	LS	10.0%	$117,125
			Subtotal	**$1,405,500**
Contingency			30%	$421,650
Sales Tax			8.2%	$149,826
ESTIMATED CONSTRUCTION COST				**$1,976,977**
Design and Owner Management			35%	$691,942
Property Acquisition	7000	SF	$17	$119,000
Conveyance 100 ft of 30-in RCP connecting pipeline		LS		$110,744
100 ft of 6-in forcemain		LS		$47,473
TOTAL PROJECT COST				**$2,900,000**

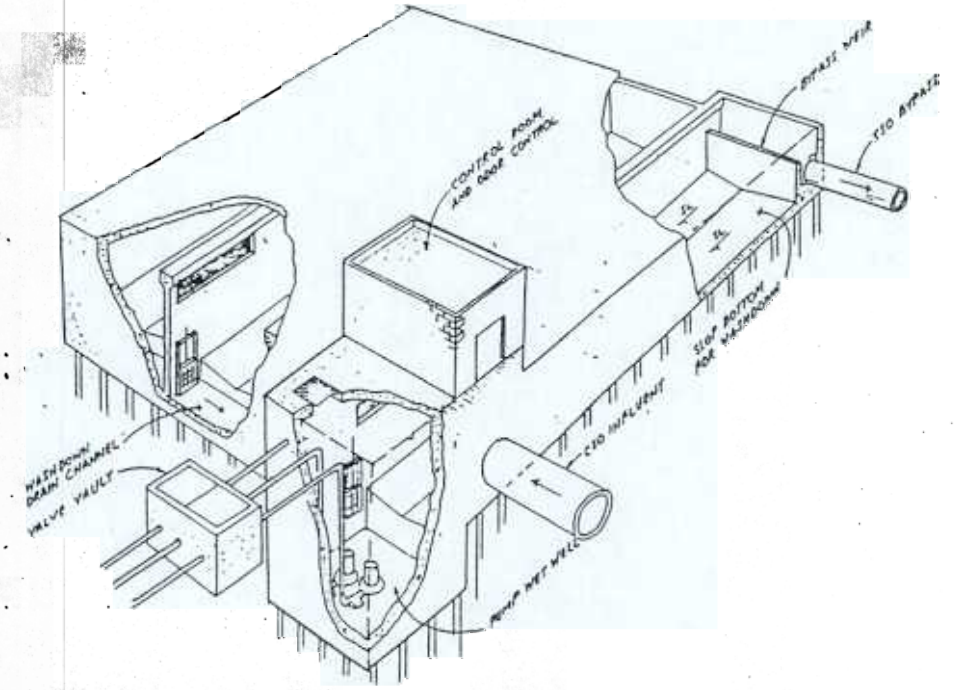

Drainage Basin: Waterfront/Industrial **CSO Control Element:** 4.5 MG Rectangular Storage Facility (Brandon Street)

Revised: 5/3/94 **Alternative Description:** Industrial Area CSO Storage

Item Description	Quant.	Unit	Unit Cost	Total Cost
Concrete	9,365	CY	$380	$3,558,700
Temporary Sheeting and Shoring	40,925	SF	$11.0	$450,175
Excavation	62,979	CY	$14.0	$881,706
Backfill-Native	5,084	CY	$9.0	$45,756
Backfill - Imported	20,334	CY	$29.0	$589,686
Disposal of Excess Excavation	57,896	CY	$10.0	$578,960
Piling	68,800	LF	$16.5	$1,135,200
Sluice Gates	9	EA	$50,000	$450,000
Pumps, Associated Piping and Mechanical Equipment	1	LS	$138,835	$138,835
Street Restoration	5,120	SY	$56.5	$289,275
Utility Interference/Relocation	5,120	SY	$100	$511,991
			SUBTOTAL:	**$8,630,284**
Aeration (3%)	1	LS	$258,909	$258,909
Mechanical Washdown System (5%)	1	LS	$431,514	$431,514
Odor Control (5%)	1	LS	$431,514	$431,514
Traffic Control	1	LS	$50,000	$50,000
Dewatering (2.5%)	1	LS	$215,757	$215,757
Mobilization/Demobilization (10%)	1	LS	$1,001,798	$1,001,798
Contractor's O & P (10%)	1	LS	$1,001,798	$1,001,798
			ESTIMATED CONSTRUCTION COST:	**$12,021,573**
Contingency (On Estimated Construction Cost)			30%	$3,606,472
Sales Tax (On Construction Cost and Contingency)			8.2%	$1,281,500
			TOTAL ESTIMATED CONSTRUCTION COST:	**$16,909,545**
Design and Owner Management			35%	$5,918,341
Property Acquisition (Inc. 30% Contingency & 15% Management)	46,079	SF	$17	$783,346
			TOTAL PROJECT COST:	**$23,611,231**

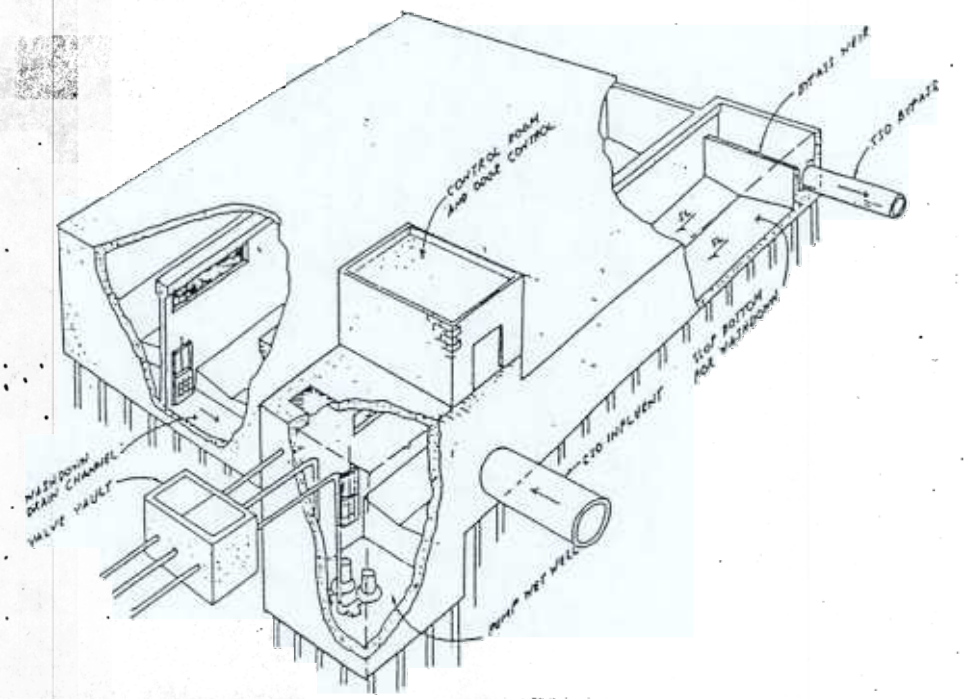

Drainage Basin: Waterfront/Industrial **CSO Control Element:** 13.1 MG Rectangular Storage Facility (Michigan Street)

Revised: 5/3/94 **Alternative Description:** Industrial Area CSO Storage

Item Description	Quant.	Unit	Unit Cost	Total Cost
Concrete	25,106	CY	$380	$9,540,280
Temporary Sheeting and Shoring	65,981	SF	$11.0	$725,791
Excavation	165,112	CY	$14.0	$2,311,568
Backfill-Native	11,427	CY	$9.0	$102,843
Backfill - Imported	45,707	CY	$29.0	$1,325,503
Disposal of Excess Excavation	153,685	CY	$10.0	$1,536,850
Piling	191,070	LF	$16.5	$3,152,655
Sluice Gates	15	EA	$50,000	$750,000
Pumps, Associated Piping and Mechanical Equipment	1	LS	$272,494	$272,494
Street Restoration	13,713	SY	$56.5	$774,770
Utility Interference/Relocation	13,713	SY	$100	$1,371,274
			SUBTOTAL:	**$21,864,027**
Aeration (3%)	1	LS	$655,921	$655,921
Mechanical Washdown System (5%)	1	LS	$1,093,201	$1,093,201
Odor Control (5%)	1	LS	$1,093,201	$1,093,201
Traffic Control	1	LS	$50,000	$50,000
Dewatering (2.5%)	1	LS	$546,601	$546,601
Mobilization/Demobilization (10%)	1	LS	$2,530,295	$2,530,295
Contractor's O & P (10%)	1	LS	$2,530,295	$2,530,295
			ESTIMATED CONSTRUCTION COST:	**$30,363,541**
			Contingency (On Estimated Construction Cost) 30%	$9,109,062
			Sales Tax (On Construction Cost and Contingency) 8.2%	$3,236,754
			TOTAL ESTIMATED CONSTRUCTION COST:	**$42,709,357**
			Design and Owner Management 35%	$14,948,275
Property Acquisition (Inc. 30% Contingency & 15% Management)	123,415	SF	$17	$2,098,049
			TOTAL PROJECT COST:	**$59,755,681**

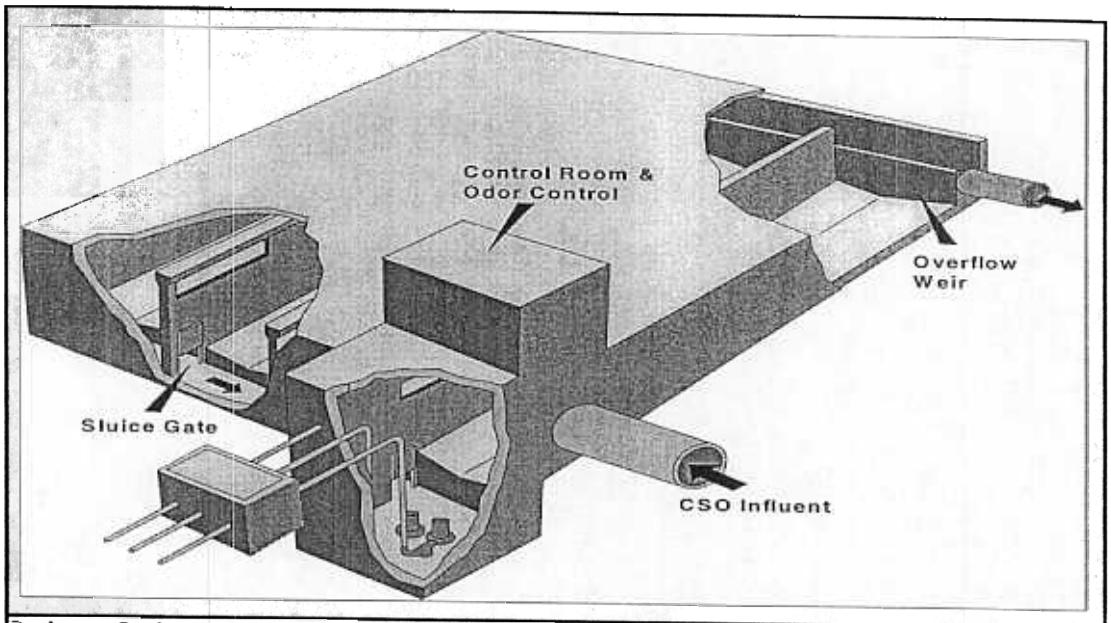

Drainage Basin: Industrial

CSO Control Alternative: Below Grade Rectangular Tank Storage

Location: Hanford #2

ENR 5630 for estimate

Sizing: 18.8 MG

Item Description	Quantity	Unit	Unit Cost	Total Cost
Concrete	30,490	CY	$377.9	$11,523,000
Temporary Sheeting and Shoring	72,900	SF	$11.0	$801,900
Excavation	171,540	CY	$14.0	$2,401,560
Backfill-Native	8,496	CY	$9.0	$76,464
Backfill - Imported	33,984	CY	$29.0	$985,536
Disposal of Excess Excavation	163,044	CY	$10.0	$1,630,440
Piling	215,200	LF	$16.5	$3,550,800
Sluice Gates	10	EA	$50,000.0	$500,000
Drainage Pumps and Assoc. Mech./Elect. Equip.	1	LS		$382,366
Street Restoration	15,600	SY	$60.0	$936,000
Utility Interference/Relocation	15,600	SY	$100.0	$1,560,000
Specialty Items				$0
			Subtotal	**$24,348,066**
Miscellaneous Mechanical/Washdown System		LS	5.0%	$1,217,403
Aeration		LS	3.0%	$730,442
Landscaping		LS	5.0%	$1,217,403
Odor Control		LS	5.0%	$1,217,403
Traffic Control		LS	$50,000	$50,000
Dewatering		LS	2.5%	$608,702
Mobilization/Demobilization		LS	10.0%	$2,938,942
Contractor's O & P		LS	10.0%	$2,938,942
			Subtotal	**$35,267,303**
Contingency			30%	$10,580,191
Sales Tax			8.2%	$3,759,495
	ESTIMATED CONSTRUCTION COST			**$49,606,989**
Design and Owner Management			35%	$17,362,446
Property Acquisition	155000	SF	$17	$2,635,000
	TOTAL PROJECT COST			**$69,610,000**

CSO Control Alternative: Storage - Below Grade Rectangular Tank Storage
Data Input Form and Unit Cost Data Input Form

Input Data in Shaded Cells

Assumptions

Cover Depth, ft	1.6		Over Excavation	
Side Water Depth, ft	21		Bottom	5 ft
Top Slab, ft	1.5		Sides	5 ft
Bottom Slab, ft	3		Wall Thickness	
Freeboard, ft	1		Exterior	2 ft
Length/Width Ratio	3		Interior	1.25 ft
Target Stage Width, ft	20		Tank Width	215 ft
Actual Stage Width, ft	20.0		Tank Length	612 ft
			Excavation Depth	33.0 ft

Calculated Quantities

Req'd Storage Volume (MG)	Concrete Base Slab (CY)	Concrete Walls (CY)	Concrete Top Slab (CY)	Req'd Y Piles (No.)	Sluice Gates (ea)	Hours Req'd to Drain Tank
18.8	14,650	8,510	7,330	2,690	10	48

Req'd Storage Volume (MG)	Excavation (CY)	Backfill (CY)	Backfill Native Mat'l (CY)	Backfill Imported Material (CY)	Haul Excess Material (CY)	Temporary Shoring (SF)	Y Street Restoration (SY)
18.8	171,540	42,480	8,496	33,984	######	72,900	15,600

LAND USE CLASSIFICATION WHERE STORAGE IS LOCATED* 2

* 1=Residential, 2=Commercial/Industrial, and 3=Highrise/Downtown Business District

Estimated Costs

ENR Basis 5630

	Quantity	Unit	Unit Cost	Total Cost
Storage Tank Construction				
Concrete - Slab on Grade	14650	CY	$300.0	$4,395,000
Concrete - Walls	8510	CY	$450.0	$3,829,500
Concrete - Elevated Slab	7330	CY	$450.0	$3,298,500
Common Excavation	171,540	CY	$14.0	$2,401,560
Backfill - Imported Material (Including Compaction)	33,984	CY	$29.0	$985,536
Backfill - Native Material (Including Compaction)	8,496	CY	$9.0	$76,464
Disposal of Excess Excavation	163,044	CY	$10.0	$1,630,440
Trench Support - Soldier Pile/Sheet	72,900	SF	$11.0	$801,900
Street/Surface Restoration				
Removal and Disposal of Asphalt	15,600	SY	$14.5	$226,200
6" Thick Base Course - Mineral Aggregate Type 2	15,600	SY	$5.5	$85,800
Pavement, Cem Conc CL 6 (1-1/2), 12"	15,600	SY	$40.0	$624,000
Pavement, Cem Conc CL 6 (1-1/2), 8" w/ 2" Asphalt Wearing Course	0	SY	$0.0	$0
Pumps, Associated Piping and Mechical/Electrical Equipment				
Pumps and Associated Piping	9.40	MGD		$255,763
Misc. Mechanical Equipment	1	LS	30.0%	$76,729
Electrical Systems	1	LS	15.0%	$49,874
Specialty Items - Description				
				$0
				$0

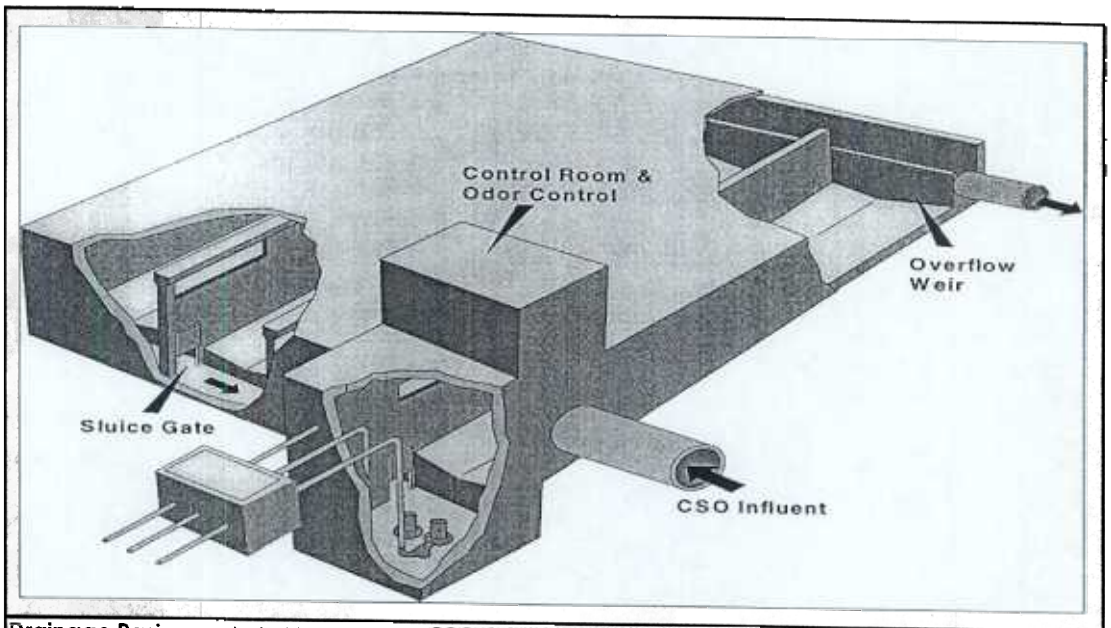

Drainage Basin: Industrial

CSO Control Alternative: Below Grade Rectangular Tank Storage

Location: Lander Street

ENR 5630 for estimate

Sizing: 15.2 MG

Item Description	Quantity	Unit	Unit Cost	Total Cost
Concrete	29,800	CY	$374.9	$11,173,500
Temporary Sheeting and Shoring	63,800	SF	$11.0	$701,800
Excavation	151,690	CY	$14.0	$2,123,660
Backfill-Native	8,258	CY	$9.0	$74,322
Backfill - Imported	33,032	CY	$29.0	$957,928
Disposal of Excess Excavation	143,432	CY	$10.0	$1,434,320
Piling	219,200	LF	$16.5	$3,616,800
Sluice Gates	11	EA	$50,000.0	$550,000
Drainage Pumps and Assoc. Mech./Elect. Equip.	1	LS		$318,837
Street Restoration	15,900	SY	$60.0	$954,000
Utility Interference/Relocation	15,900	SY	$100.0	$1,590,000
Specialty Items				$0
			Subtotal	**$23,495,167**
Miscellaneous Mechanical/Washdown System		LS	5.0%	$1,174,758
Aeration		LS	3.0%	$704,855
Landscaping		LS	5.0%	$1,174,758
Odor Control	1	LS	5.0%	$1,174,758
Traffic Control	1	LS	$50,000	$50,000
Dewatering	1	LS	2.5%	$587,379
Mobilization/Demobilization	1	LS	10.0%	$2,836,168
Contractor's O & P	1	LS	10.0%	$2,836,168
			Subtotal	**$34,034,011**
Contingency			30%	$10,210,203
Sales Tax			8.2%	$3,628,026
	ESTIMATED CONSTRUCTION COST			**$47,872,240**
Design and Owner Management			35%	$16,755,284
Property Acquisition	157000	SF	$17	$2,669,000
	TOTAL PROJECT COST			**$67,300,000**

CSO Control Alternative: Storage - Below Grade Rectangular Tank Storage
Data Input Form and Unit Cost Data Input Form

Input Data In Shaded Cells

Assumptions

Cover Depth, ft	1.5	Over Excavation		
Side Water Depth, ft	17	Bottom	5	ft
Top Slab, ft	1.5	Sides	5	ft
Bottom Slab, ft	3	Wall Thickness		
Freeboard, ft	1	Exterior	2	ft
Length/Width Ratio	3	Interior	1.25	ft
Target Stage Width, ft	20	Tank Width	218	ft
Actual Stage Width, ft	18.3	Tank Length	616	ft
		Excavation Depth	28.72	ft

Calculated Quantities

Req'd Storage Volume (MG)	Concrete Base Slab (CY)	Concrete Walls (CY)	Concrete Top Slab (CY)	Req'd Y Piles (No.)	Sluice Gates (ea)	Hours Req'd to Drain Tank
15.2	14,910	7,430	7,460	2,740	11	48

Req'd Storage Volume (MG)	Excavation (CY)	Backfill (CY)	Backfill Native Mat'l (CY)	Backfill Imported Material (CY)	Haul Excess Material (CY)	Temporary Shoring (SF)	Y Street Restoration (SY)
15.2	151,690	41,290	8,258	33,032	######	63,800	15,900

LAND USE CLASSIFICATION WHERE STORAGE IS LOCATED* 2

* 1=Residential, 2=Commercial/Industrial, and 3=Highrise/Downtown Business District

Estimated Costs

ENR Basis 5630

	Quantity	Unit	Unit Cost	Total Cost
Storage Tank Construction				
Concrete - Slab on Grade	14910	CY	$300.0	$4,473,000
Concrete - Walls	7430	CY	$450.0	$3,343,500
Concrete - Elevated Slab	7460	CY	$450.0	$3,357,000
Common Excavation	151,690	CY	$14.0	$2,123,660
Backfill - Imported Material (Including Compaction)	33,032	CY	$29.0	$957,928
Backfill - Native Material (Including Compaction)	8,258	CY	$9.0	$74,322
Disposal of Excess Excavation	143,432	CY	$10.0	$1,434,320
Trench Support - Soldier Pile/Sheet	63,800	SF	$11.0	$701,800
Street/Surface Restoration				
Removal and Disposal of Asphalt	15,900	SY	$14.5	$230,550
6" Thick Base Course - Mineral Aggregate Type 2	15,900	SY	$5.5	$87,450
Pavement, Cem Conc CL 6 (1-1/2), 12"	15,900	SY	$40.0	$636,000
Pavement, Cem Conc CL 6 (1-1/2), 8" w/ 2" Asphalt Wearing Course	0	SY	$0.0	$0
Pumps, Associated Piping and Mechical/Electrical Equipment				
Pumps and Associated Piping	7.60	MGD		$213,269
Misc. Mechanical Equipment	1	LS	30.0%	$63,981
Electrical Systems	1	LS	15.0%	$41,587
Specialty Items - Description				
				$0
				$0

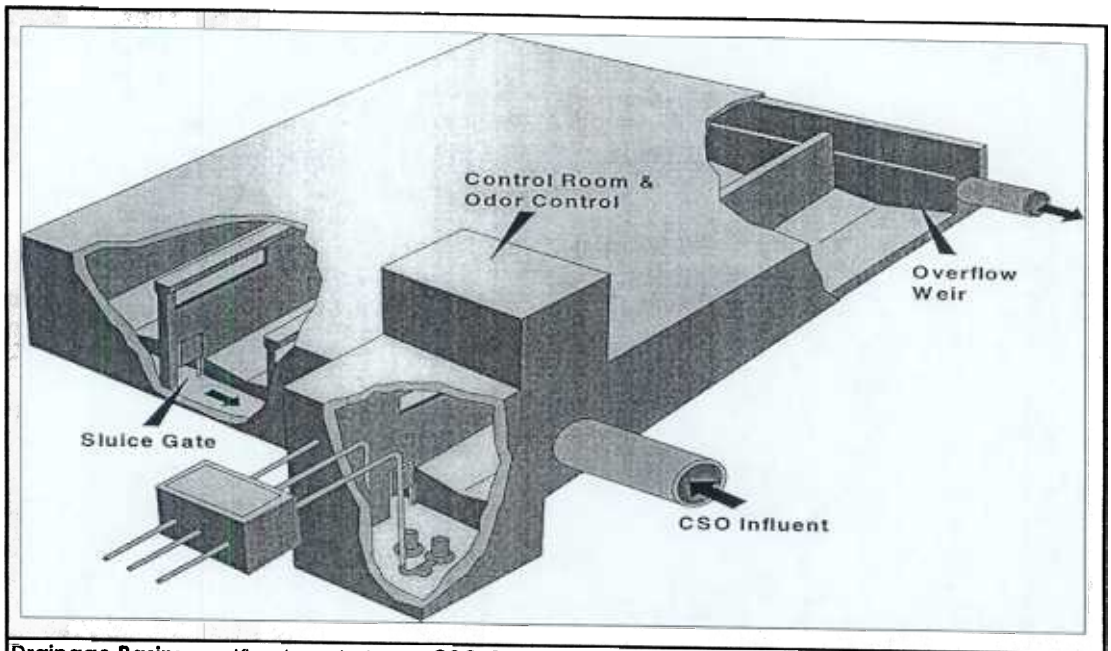

Drainage Basin: Kingdome Industrial **CSO Control Alternative:** Below Grade Rectangular Tank Storage

Location: Conneticut

ENR 5630 for estimate **Sizing:** 9.5 MG

Item Description	Quantity	Unit	Unit Cost	Total Cost
Concrete	18,060	CY	$377.6	$6,819,000
Temporary Sheeting and Shoring	63,400	SF	$11.0	$697,400
Excavation	116,400	CY	$14.0	$1,629,600
Backfill-Native	9,334	CY	$9.0	$84,006
Backfill - Imported	37,336	CY	$29.0	$1,082,744
Disposal of Excess Excavation	107,066	CY	$10.0	$1,070,660
Piling	128,800	LF	$16.5	$2,125,200
Sluice Gates	8	EA	$50,000.0	$400,000
Drainage Pumps and Assoc. Mech./Elect. Equip.		LS		$218,249
Street Restoration	9,500	SY	$60.0	$570,000
Utility Interference/Relocation	9,500	SY	$100.0	$950,000
Specialty Items				$0
			Subtotal	**$15,646,859**
Miscellaneous Mechanical/Washdown System		LS	5.0%	$782,343
Aeration		LS	3.0%	$469,406
Landscaping		LS	2.5%	$391,171
Odor Control		LS	5.0%	$782,343
Traffic Control		LS	$50,000	$50,000
Dewatering		LS	2.5%	$391,171
Mobilization/Demobilization		LS	10.0%	$1,851,329
Contractor's O & P		LS	10.0%	$1,851,329
			Subtotal	**$22,215,952**
Contingency			30%	$6,664,786
Sales Tax			8.2%	$2,368,221
	ESTIMATED CONSTRUCTION COST			**$31,248,959**
Design and Owner Management			35%	$10,937,136
Property Acquisition	94000	SF	$17	$1,598,000
Conveyance New regulator station	1	LS		$732,000
	TOTAL PROJECT COST			**$44,520,000**

CSO Control Alternative: Storage - Below Grade Rectangular Tank Storage
Data Input Form and Unit Cost Data Input Form

Input Data in Shaded Cells

Assumptions

Cover Depth, ft	8		Over Excavation	
Side Water Depth, ft	18		Bottom	5 ft
Top Slab, ft	1.5		Sides	5 ft
Bottom Slab, ft	3		Wall Thickness	
Freeboard, ft	1.5		Exterior	2 ft
Length/Width Ratio	3		Interior	1.25 ft
Target Stage Width, ft	20		Tank Width	166 ft
Actual Stage Width, ft	19.2		Tank Length	472 ft
			Excavation Depth	37 ft

Calculated Quantities

Req'd Storage Volume (MG)	Concrete Base Slab (CY)	Concrete Walls (CY)	Concrete Top Slab (CY)	Req'd Y Piles (No.)	Sluice Gates (ea)	Hours Req'd to Drain Tank
9.5	8,720	4,980	4,360	1,610	8	48

Req'd Storage Volume (MG)	Excavation (CY)	Backfill (CY)	Backfill Native Mat'l (CY)	Backfill Imported Material (CY)	Haul Excess Material (CY)	Temporary Shoring (SF)	Y Street Restoration (SY)
9.5	116,400	46,670	9,334	37,336	######	63,400	9,500

LAND USE CLASSIFICATION WHERE STORAGE IS LOCATED* 2

* 1=Residential, 2=Commercial/Industrial, and 3=Highrise/Downtown Business District

Estimated Costs

ENR Basis 5630

	Quantity	Unit	Unit Cost	Total Cost
Storage Tank Construction				
Concrete - Slab on Grade	8720	CY	$300.0	$2,616,000
Concrete - Walls	4980	CY	$450.0	$2,241,000
Concrete - Elevated Slab	4360	CY	$450.0	$1,962,000
Common Excavation	116,400	CY	$14.0	$1,629,600
Backfill - Imported Material (Including Compaction)	37,336	CY	$29.0	$1,082,744
Backfill - Native Material (Including Compaction)	9,334	CY	$9.0	$84,006
Disposal of Excess Excavation	107,066	CY	$10.0	$1,070,660
Trench Support - Soldier Pile/Sheet	63,400	SF	$11.0	$697,400
Street/Surface Restoration				
Removal and Disposal of Asphalt	9,500	SY	$14.5	$137,750
6" Thick Base Course - Mineral Aggregate Type 2	9,500	SY	$5.5	$52,250
Pavement, Cem Conc CL 6 (1-1/2), 12"	9,500	SY	$40.0	$380,000
Pavement, Cem Conc CL 6 (1-1/2), 8" w/ 2" Asphalt Wearing Course	0	SY	$0.0	$0
Pumps, Associated Piping and Mechical/Electrical Equipment				
Pumps and Associated Piping	4.75	MGD		$145,986
Misc. Mechanical Equipment	1	LS	30.0%	$43,796
Electrical Systems	1	LS	15.0%	$28,467
Specialty Items - Description				
				$0
				$0

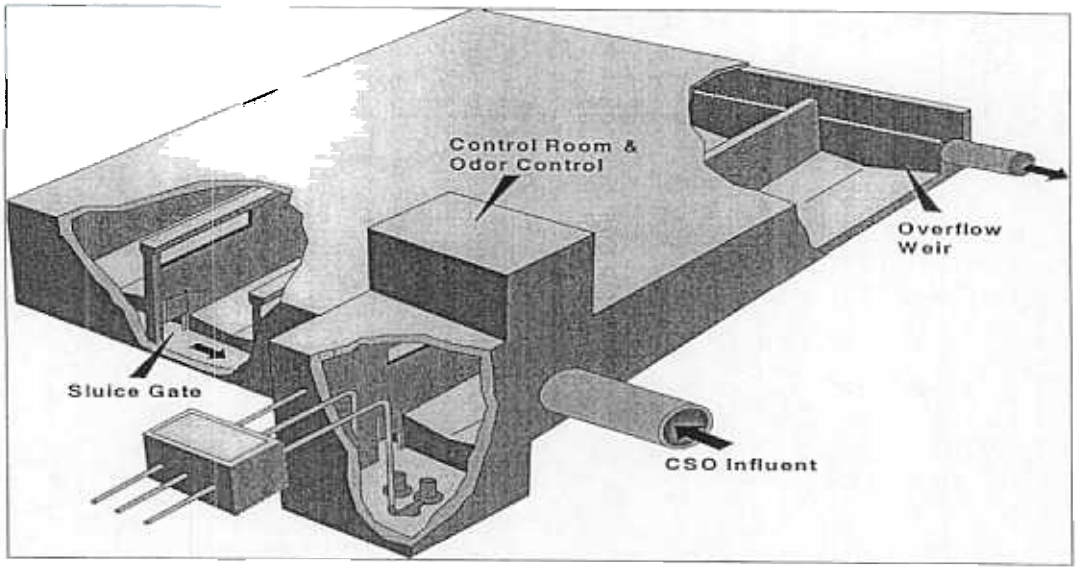

Drainage Basin: King Dome/Ind **CSO Control Alternative:** Below Grade Rectangular Tank Storage

Location: King Street

ENR 5630 for estimate **Sizing:** 2.2 MG

Item Description	Quantity	Unit	Unit Cost	Total Cost
Concrete	4,820	CY	$383.7	$1,849,500
Temporary Sheeting and Shoring	34,100	SF	$11.0	$375,100
Excavation	32,320	CY	$14.0	$452,480
Backfill-Native	3,066	CY	$9.0	$27,594
Backfill - Imported	12,264	CY	$29.0	$355,656
Disposal of Excess Excavation	29,254	CY	$10.0	$292,540
Piling	32,000	LF	$16.5	$528,000
Sluice Gates	4	EA	$50,000.0	$200,000
Drainage Pumps and Assoc. Mech./Elect. Equip.	1	LS		$89,567
Street Restoration	2,500	SY	$60.0	$150,000
Utility Interference/Relocation	2,500	SY	$100.0	$250,000
Specialty Items				$0
			Subtotal	**$4,570,437**
Miscellaneous Mechanical/Washdown System		LS	5.0%	$228,522
Aeration		LS	3.0%	$137,113
Landscaping		LS	2.5%	$114,261
Odor Control	1	LS	5.0%	$228,522
Traffic Control	1	LS	$50,000	$50,000
Dewatering	1	LS	2.5%	$114,261
Mobilization/Demobilization	1	LS	10.0%	$544,312
Contractor's O & P		LS	10.0%	$544,312
			Subtotal	**$6,531,739**
Contingency			30%	$1,959,522
Sales Tax			8.2%	$696,283
	ESTIMATED CONSTRUCTION COST			**$9,187,544**
Design and Owner Management			35%	$3,215,641
Property Acquisition	25000	SF	$17	$425,000
Conveyance New Regulator Station				$732,000
	TOTAL PROJECT COST			**$13,570,000**

CSO Control Alternative: Storage - Below Grade Rectangular Tank Storage
Data Input Form and Unit Cost Data Input Form

Input Data In Shaded Cells

Assumptions

Cover Depth, ft	10		Over Excavation	
Side Water Depth, ft	18		Bottom	5 ft
Top Slab, ft	1.5		Sides	5 ft
Bottom Slab, ft	3		Wall Thickness	
Freeboard, ft	1.5		Exterior	2 ft
Length/Width Ratio	3		Interior	1.25 ft
Target Stage Width, ft	20		Tank Width	82 ft
Actual Stage Width, ft	18.5		Tank Length	234 ft
			Excavation Depth	39 ft

Calculated Quantities

Req'd Storage Volume (MG)	Concrete Base Slab (CY)	Concrete Walls (CY)	Concrete Top Slab (CY)	Req'd Y Piles (No.)	Sluice Gates (ea)	Hours Req'd to Drain Tank
2.2	2,130	1,620	1,070	400	4	48

Req'd Storage Volume (MG)	Excavation (CY)	Backfill (CY)	Backfill Native Mat'l (CY)	Backfill Imported Material (CY)	Haul Excess Material (CY)	Temporary Shoring (SF)	Y Street Restoration (SY)
2.2	32,320	15,330	3,066	12,264	29,254	34,100	2,500

LAND USE CLASSIFICATION WHERE STORAGE IS LOCATED* 2

* 1=Residential, 2=Commercial/Industrial, and 3=Highrise/Downtown Business District

Estimated Costs

ENR Basis 5630

	Quantity	Unit	Unit Cost	Total Cost
Storage Tank Construction				
Concrete - Slab on Grade	2130	CY	$300.0	$639,000
Concrete - Walls	1620	CY	$450.0	$729,000
Concrete - Elevated Slab	1070	CY	$450.0	$481,500
Common Excavation	32,320	CY	$14.0	$452,480
Backfill - Imported Material (Including Compaction)	12,264	CY	$29.0	$355,656
Backfill - Native Material (Including Compaction)	3,066	CY	$9.0	$27,594
Disposal of Excess Excavation	29,254	CY	$10.0	$292,540
Trench Support - Soldier Pile/Sheet	34,100	SF	$11.0	$375,100
Street/Surface Restoration				
Removal and Disposal of Asphalt	2,500	SY	$14.5	$36,250
6" Thick Base Course - Mineral Aggregate Type 2	2,500	SY	$5.5	$13,750
Pavement, Cem Conc CL 6 (1-1/2), 12"	2,500	SY	$40.0	$100,000
Pavement, Cem Conc CL 6 (1-1/2), 8" w/ 2" Asphalt Wearing Course	0	SY	$0.0	$0
Pumps, Associated Piping and Mechical/Electrical Equipment				
Pumps and Associated Piping	1.10	MGD		$59,911
Misc. Mechanical Equipment	1	LS	30.0%	$17,973
Electrical Systems	1	LS	15.0%	$11,683
Specialty Items - Description				
				$0
				$0

Correct Mich/Brandon/Conneticut Separation/Storage Pre-Design Costs

Assumptions

0.3	Contingency
0.35	Design+Owner Management
0.1	Contractors O&P
0.1	Mobilization/demobilization
0.082	Sales Tax
5630	ENR value for CSO estimate

Costs taken from KCM Pre-design Studies

Brandon Separation/Storage

	Item	Pre-design	CSO Est.	
	ENR	5074	5630	
Regulator	Raw construction	$335,290	$279,408	Correct for 20% Contractors O&P in unit costs
	Inflate to ENR 5630		$310,025	
Separation	Raw construction	$835,971	$696,643	Correct for 20% Contractors O&P in unit costs
	Inflate to ENR 5630		$772,979	

		1.00 MG tank		5.00 MG tank		Required 3.00 MG tank
Storage Tank	Raw construction	$1,860,250		$5,037,000		
	Subtract mobilization	$60,000		$150,000		
	Raw Construction	$1,800,250	$1,800,250	$4,887,000	$4,887,000	$3,343,625
	Inflate to ENR 5630		$1,997,518		$5,422,509	$3,710,014
Sanitary trunk	Raw construction	$1,110,920	$925,767	Correct for 20% Contractors O&P in unit costs		
	Inflate to ENR 5630		$1,027,211			

Summary			
Raw Construction Cost	Regulator Station		$310,025
	Separation (52 acres)		$772,979
	Storage tank (3 MG)		$3,710,014
	Storage Pump Station		$0
	Sanitary Trunk (alt. 1B)		$1,027,211
	Subtotal		$5,820,229
	Contractors O&P	10.0%	$582,023
	Mobilization/demob	10.0%	$582,023
	Subtotal		$6,984,275
	Contingency	30.0%	$2,095,282
	Sales Tax	8.2%	$744,524
Estimated Construction Cost			$9,824,081
	Design/management	35.0%	$3,438,428

Project Cost by Element

Separation	$1,761,382
* Conveyance	$3,047,149
Storage	$9,022,122

* Includes Regulator

Land Cost for Storage Tank	$17/sq-ft	$568,144	0.77 acres

Includes 30% contingency and 15% Management

Total Project Cost $13,800,000 **Brandon Regulator**

Michigan Separation/Storage

	Item	Pre-design	CSO Est.	
	ENR	5134	5630	
Regulator	Raw construction	$337,290	$281,075	Correct for 20% Contractors O&P in unit costs
	Inflate to ENR 5630		$308,230	
Separation Level C	Raw construction	$4,349,341	$3,624,451	Correct for 20% Contractors O&P in unit costs
	Inflate to ENR 5630		$3,974,612	

						Required
		5.00 MG tank		9.00 MG tank		5.50
Storage Tank	Raw construction	$4,427,000		$7,446,600		MG tank
	Subtract mobilization	$150,000		$210,000		
	Raw Construction	$4,277,000	$4,277,000	$7,236,600	$7,236,600	$4,646,950
	Inflate to ENR 5630		$4,690,205		$7,935,734	$5,095,896
Pump station	Raw construction	$499,809	$416,508	Correct for 20% Contractors O&P in unit costs		
	Inflate to ENR 5630		$456,747			
Sanitary trunk	Raw construction	$3,495,774	$2,913,145	Correct for 20% Contractors O&P in unit costs		
	Inflate to ENR 5630		$3,194,586			

Summary

Raw Construction Cost	Regulator Station		$308,230
	Separation (238 acres)		$3,974,612
	Storage tank (5.5 MG)		$5,095,896
	Storage Pump Station		$456,747
	Sanitary Trunk (alt. 1C)		$3,194,586
	Subtotal		$13,030,071
	Contractors O&P	10.0%	$1,303,007
	Mobilization/demob	10.0%	$1,303,007
	Subtotal		$15,636,085
	Contingency	30.0%	$4,690,825
	Sales Tax	8.2%	$1,666,807
Estimated Construction Cost			$21,993,717
	Design/management	35.0%	$7,697,801

Project Cost by Element

Separation	$9,056,917
* Conveyance	$7,981,839
Storage	$13,694,359

* Includes Regulator

Store+Reg	$14,396,720

Land Cost for Storage Tank	$17/sq-ft	$1,041,597	1.41 acres

Includes 30% contingency and 15% Management

Total Project Cost $30,700,000 **Michigan Regulator**

Kingdome/Industrial Area Separation/Storage (Conneticut)

	Item	Pre-design	CSO Est.			
	ENR	5066	5630			
Regulator	Raw construction	$353,170	$294,308	Correct for 20% Contractors O&P in unit costs		
	Inflate to ENR 5630		$322,742			
Separation Level I	Raw construction	$771,834	$643,195	Correct for 20% Contractors O&P in unit costs		
	Inflate to ENR 5630		$705,335			
		8.00 MG tank		15.00 MG tank		Required 6.00 MG tank
Storage Tank	Raw construction	$6,500,400		$10,635,050		
	Subtract mobilization	$161,000		$275,000		
	Raw Construction	$6,339,400	$6,339,400	$10,360,050	$10,360,050	$5,190,643
	Inflate to ENR 5630		$6,951,855		$11,360,943	$5,692,115
Pump station	Raw construction	Included in Storage Tank				
	Inflate to ENR 5630		$0			
Sanitary trunk	Alaska to Airpt Wy	$4,391,936	$3,659,947	Correct for 20% Contractors O&P in unit costs		
	1st to 4th Ave S.	$2,399,933	$1,999,944	Already Constructed		
	Subtotal	$1,992,003	$1,660,003			
	Inflate to ENR 5630		$1,820,377			

Summary

Raw Construction Cost	Regulator Station		$322,742
	Separation (128.5 acres)		$705,335
	Storage tank (6.0 MG)		$5,692,115
	Storage Pump Station		$0
	Sanitary Trunk		$1,820,377
	Subtotal		$8,540,568
	Contractors O&P	10.0%	$854,057
	Mobilization/demob	10.0%	$854,057
	Subtotal		$10,248,682
	Contingency	30.0%	$3,074,605
	Sales Tax	8.2%	$1,092,509
Estimated Construction Cost			$14,415,796
	Design/management	35.0%	$5,045,529

Project Cost by Element

Separation	$1,607,240
* Conveyance	$4,883,507
Storage	$14,106,865

* Includes Regulator

Land Cost for Storage Tank	$17/sq-ft	$1,136,288	1.53 acres

Total Project Cost $20,600,000 Kingdome/Industrial Area

Cost with 8.5 MG tank (includes King St.) $24,700,000 not including King St. conveyance

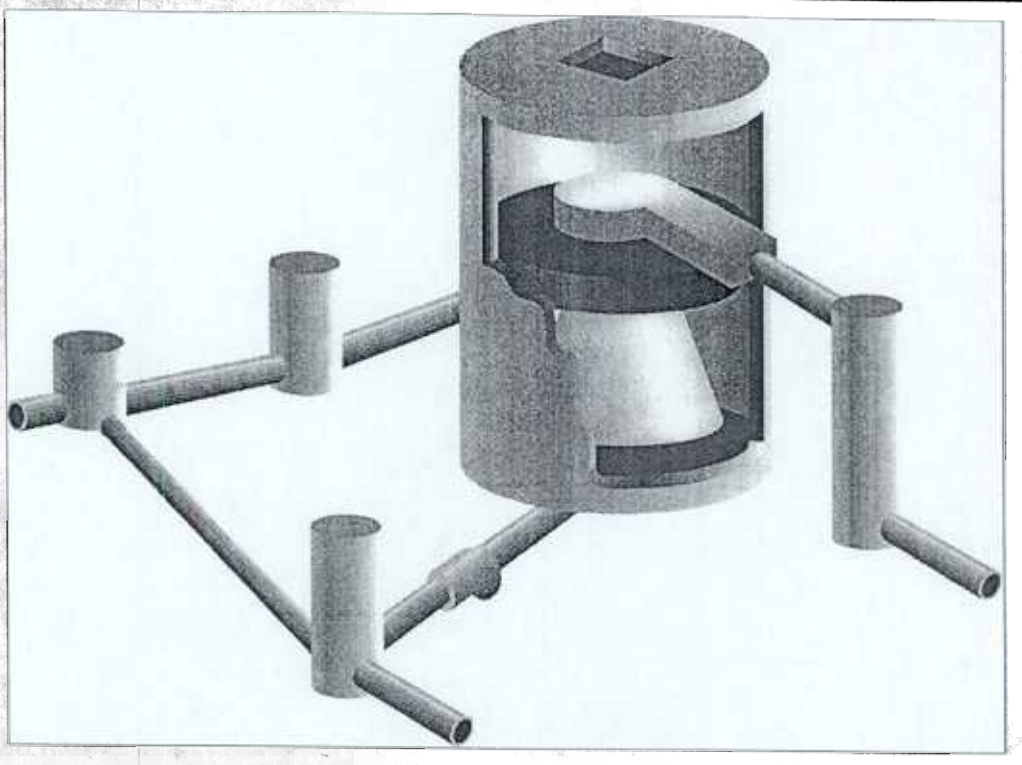

Drainage Basin: Industrial

CSO Control Alternative: Vortex Separator Treatment

Location: Michigan

ENR 5630 for estimate

Sizing: 75 mgd @ 5.1 gpm/sq ft

3.5 MG available storage

Item Description	Quantity	Unit	Unit Cost	Total Cost
Concrete	6,278	CY	$363.5	$2,281,934
Temporary Sheeting and Shoring	77,376	SF	$11.0	$851,136
Excavation	58,197	CY	$14.0	$814,763
Backfill-Native	8,128	CY	$9.0	$73,151
Backfill - Imported	32,512	CY	$29.0	$942,837
Disposal of Excess Excavation	50,069	CY	$10.0	$500,694
Piling	27710	LF	$16.5	$457,215
Street Restoration	2,304	SY	$60.0	$138,240
Mechanical Equipment (Vortex units and pumps)	11	EA	$328,985	$3,618,837
Flow Control Gates	11	EA	$10,000	$110,000
Miscellaneous Mechanical/Washdown System	11	EA	$53,576	$589,331
Chemical Feed, Incl Chlorination/Dechlorination	75	LS	$1,530,000	$1,530,000
Specialty Items				$0
			Subtotal	**$11,908,138**
Landscaping	1	LS	1.5%	$178,622
Odor Control	1	LS	1.0%	$119,081
Utility Interference/Relocation	1	LS	5.0%	$595,407
Dewatering	1	LS	2.5%	$297,703
Mobilization/Demobilization	1	LS	10.0%	$1,309,895
Contractor's O & P	1	LS	10.0%	$1,309,895
			Subtotal	**$15,718,743**
Contingency			30%	$4,715,623
Sales Tax			8.2%	$1,675,618
	ESTIMATED CONSTRUCTION COST			**$22,109,983**
Design and Owner Management			35%	$7,738,494
Property Acquisition	19000	SF	$17	$323,000
	TOTAL PROJECT COST			**$30,200,000**

CSO Control Alternative: Vortex - First Stage Treatment Plant
Data Input Form and Unit Cost Data Input Form

Input Data in Shaded Cells

Flowrate (mgd) 75 Surface Loading Rate (gpm/sq ft) 5.0 Target
5.10 Actual

Assumed Diameter of Vortex Units 38

Req'd Vortex Units (No.)	Concrete Circular Walls (CY)	Concrete Floor (CY)	Concrete Top Slab (CY)	Req'd Y Piles (No.)	Control Gates (ea)
9	2,963	1,418	756	283	9

Max WS elevation -14 GS elevation 7

Height above ground -21

Estimated Depth of Excavation (ft) 62

Req'd Vortex Units (No.)	Excavation (CY)	Backfill (CY)	Backfill Native Mat'l (CY)	Backfill Imported Material (CY)	Haul Excess Material (CY)	Temporary Shoring (SF)	Y Street Restoration (SY)
9	47,616	33,251	6,650	26,600	40,966	52,551	2,304

LAND USE CLASSIFICATION WHERE FACILITY IS LOCATED* 2

* 1=Residential, 2=Commercial/Industrial, and 3=Highrise/Downtown Business District

ENR Basis 5630

	Quantity	Unit	Unit Cost	Total Cost
Storage Tank Construction				
Concrete - Slab on Grade	2,963	CY	$300.0	$888,934
Concrete - Walls	1,418	CY	$450.0	$637,941
Concrete - Elevated Slab	756	CY	$450.0	$340,235
Common Excavation	47,616	CY	$14.0	$666,624
Backfill - Imported Material (Including Compaction)	26,600	CY	$29.0	$771,412
Backfill - Native Material (Including Compaction)	6,650	CY	$9.0	$59,851
Disposal of Excess Excavation	40,966	CY	$10.0	$409,659
Trench Support - Soldier Pile/Sheet	52,551	SF	$11.0	$578,063
Street/Surface Restoration				
Removal and Disposal of Asphalt	2,304	SY	$14.5	$33,408
6" Thick Base Course - Mineral Aggregate Type 2	2,304	SY	$5.5	$12,672
Pavement, Cem Conc CL 6 (1-1/2), 12"	2,304	SY	$40.0	$92,160
Pavement, Cem Conc CL 6 (1-1/2), 8" w/ 2" Asphalt Wearing Course	0	SY	$0.0	$0
Underflow Pumps and Assoc. Mechanical Equipment	7.50	MGD		$315,307
Specialty Items - Description				
				$0
				$0

CSO Control Alternative: Vortex - Second Stage Treatment Plant
Data Input Form and Unit Cost Data Input Form

Input Data in Shaded Cells

Percentage flow from Primary Units 10.0%
Flowrate (mgd) 8 Surface Loading Rate (gpm/sq ft) 2.0 Target
Assumed Diameter of Vortex Units 38 2.30 Actual

Req'd Vortex Units	Concrete: Circular Walls (CY)	Concrete: Floor (CY)	Concrete: Top Slab (CY)	Piles (No.)	Sluice Gates (ea)
2	658	315	168	63	2

Max WS elevation -14 GS elevation 7
Height above ground -21
Estimated Depth of Excavation (ft) 62

Req'd Storage Volume (MG)	Excavation (CY)	Backfill (CY)	Backfill Native Mat'l (CY)	Backfill Imported Material (CY)	Haul Excess Material (CY)	Temporary Shoring (SF)	Street Restoration (SY)
2	10,581	7,389	1,478	5,911	9,104	24,825	512

LAND USE CLASSIFICATION WHERE FACILITY IS LOCATED* 2

* 1=Residential, 2=Commercial/Industrial, and 3=Highrise/Downtown Business District

ENR Basis 5630

	Quantity	Unit	Unit Cost	Total Cost
Storage Tank Construction				
Concrete - Slab on Grade	658	CY	$300.0	$197,541
Concrete - Walls	315	CY	$450.0	$141,693
Concrete - Elevated Slab	168	CY	$450.0	$75,569
Common Excavation	10,581	CY	$14.0	$148,139
Backfill - Imported Material (Including Compaction)	5,911	CY	$29.0	$171,425
Backfill - Native Material (Including Compaction)	1,478	CY	$9.0	$13,300
Disposal of Excess Excavation	9,104	CY	$10.0	$91,035
Trench Support - Soldier Pile/Sheet	24,825	SF	$11.0	$273,073
Street/Surface Restoration				
Removal and Disposal of Asphalt	512	SY	$14.5	$7,424
6" Thick Base Course - Mineral Aggregate Type 2	512	SY	$5.5	$2,816
Pavement, Cem Conc CL 6 (1-1/2), 12"	512	SY	$40.0	$20,480
Pavement, Cem Conc CL 6 (1-1/2), 8" w/ 2" Asphalt Wearing Course	0	SY	$0.0	$0
Underflow Pumps and Assoc. Mechanical Equipment	1.50	MGD		$103,544
Specialty Items - Description				
				$0
				$0

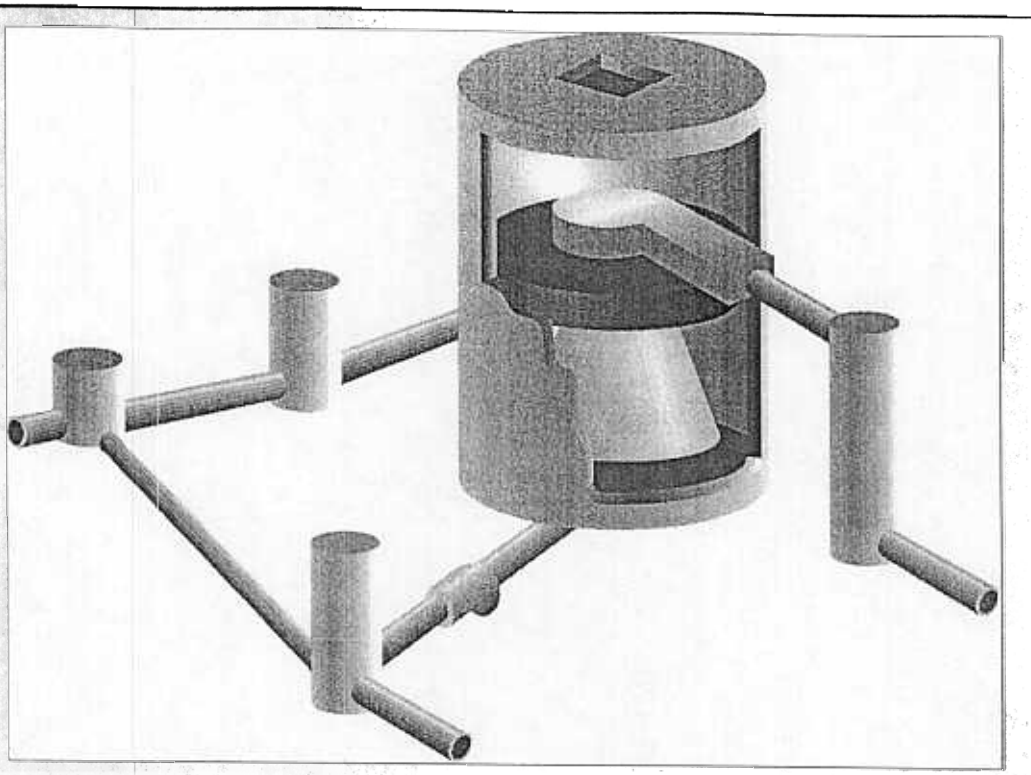

Drainage Basin: Industrial

CSO Control Alternative: Vortex Separator Treatment

Location: Hanford/Lander

ENR 5630 for estimate

Sizing: 145 mgd @ 4.9 gpm/sq ft

7.1 MG available storage

Item Description	Quantity	Unit	Unit Cost	Total Cost
Concrete	12,376	CY	$364.4	$4,509,909
Temporary Sheeting and Shoring	108,601	SF	$11.0	$1,194,608
Excavation	112,828	CY	$14.0	$1,579,588
Backfill-Native	15,542	CY	$9.0	$139,882
Backfill - Imported	62,170	CY	$29.0	$1,802,921
Disposal of Excess Excavation	97,285	CY	$10.0	$972,853
Piling	55420	LF	$16.5	$914,430
Street Restoration	4,608	SY	$60.0	$276,480
Mechanical Equipment (Vortex units and pumps)	22	EA	$323,422	$7,115,293
Flow Control Gates	22	EA	$50,000	$1,100,000
Miscellaneous Mechanical/Washdown System	22	EA	$53,576	$1,178,662
Chemical Feed, Incl Chlorination/Dechlorination	145	LS	$2,958,000	$2,958,000
Specialty Items				$0
			Subtotal	**$23,742,625**
Landscaping	1	LS	1.5%	$356,139
Odor Control	1	LS	1.0%	$237,426
Utility Interference/Relocation	1	LS	5.0%	$1,187,131
Dewatering	1	LS	2.5%	$593,566
Mobilization/Demobilization	1	LS	10.0%	$2,611,689
Contractor's O & P	1	LS	10.0%	$2,611,689
			Subtotal	**$31,340,265**
Contingency			30%	$9,402,080
Sales Tax			8.2%	$3,340,872
	ESTIMATED CONSTRUCTION COST			**$44,083,217**
Design and Owner Management			35%	$15,429,126
Property Acquisition	38000	SF	$17	$646,000
	TOTAL PROJECT COST			**$60,200,000**

CSO Control Alternative: Vortex - First Stage Treatment Plant
Data Input Form and Unit Cost Data Input Form

Input Data in Shaded Cells

Flowrate (mgd) 145 Surface Loading Rate (gpm/sq ft) 5.0 Target
4.93 Actual

Assumed Diameter of Vortex Units 38

Req'd Vortex Units (No.)	Concrete: Circular Walls (CY)	Concrete: Floor (CY)	Concrete: Top Slab (CY)	Req'd Y Piles (No.)	Control Gates (ea)
18	5,779	2,835	1,512	567	18

Max WS elevation -12.1 GS elevation 7

Height above ground -19.1

Estimated Depth of Excavation (ft) 60.1

Req'd Vortex Units (No.)	Excavation (CY)	Backfill (CY)	Backfill Native Mat'l (CY)	Backfill Imported Material (CY)	Haul Excess Material (CY)	Temporary Shoring (SF)	Y Street Restoration (SY)
18	92,314	63,583	12,717	50,866	79,597	77,817	4,608

LAND USE CLASSIFICATION WHERE FACILITY IS LOCATED* 2

* 1=Residential, 2=Commercial/Industrial, and 3=Highrise/Downtown Business District

ENR Basis 5630	Quantity	Unit	Unit Cost	Total Cost
Storage Tank Construction				
Concrete - Slab on Grade	5,779	CY	$300.0	$1,733,720
Concrete - Walls	2,835	CY	$450.0	$1,275,882
Concrete - Elevated Slab	1,512	CY	$450.0	$680,471
Common Excavation	92,314	CY	$14.0	$1,292,390
Backfill - Imported Material (Including Compaction)	50,866	CY	$29.0	$1,475,117
Backfill - Native Material (Including Compaction)	12,717	CY	$9.0	$114,449
Disposal of Excess Excavation	79,597	CY	$10.0	$795,971
Trench Support - Soldier Pile/Sheet	77,817	SF	$11.0	$855,992
Street/Surface Restoration				
Removal and Disposal of Asphalt	4,608	SY	$14.5	$66,816
6" Thick Base Course - Mineral Aggregate Type 2	4,608	SY	$5.5	$25,344
Pavement, Cem Conc CL 6 (1-1/2), 12"	4,608	SY	$40.0	$184,320
Pavement, Cem Conc CL 6 (1-1/2), 8" w/ 2" Asphalt Wearing Course	0	SY	$0.0	$0
Underflow Pumps and Assoc. Mechanical Equipment	14.50	MGD		$562,365
Specialty Items - Description				
				$0
				$0

CSO Control Alternative: Vortex - Second Stage Treatment Plant
Data Input Form and Unit Cost Data Input Form

Input Data in Shaded Cells

Percentage flow from Primary Units 10.0%
Flowrate (mgd) 15 Surface Loading Rate (gpm/sq ft) 2.0 Target
2.22 Actual
Assumed Diameter of Vortex Units 38

Req'd Vortex Units	Concrete			Piles (No.)	Sluice Gates (ea)
	Circular Walls (CY)	Floor (CY)	Top Slab (CY)		
4	1,284	630	336	126	4

Max WS elevation -12.1 GS elevation 7
Height above ground -19.1
Estimated Depth of Excavation (ft) 60.1

Req'd Storage Volume (MG)	Excavation (CY)	Backfill (CY)	Backfill Native Mat'l (CY)	Backfill Imported Material (CY)	Haul Excess Material (CY)	Temporary Shoring (SF)	Street Restoration (SY)
4	20,514	14,129	2,826	11,304	17,688	30,783	1,024

LAND USE CLASSIFICATION WHERE FACILITY IS LOCATED* 2

* 1=Residential, 2=Commercial/Industrial, and 3=Highrise/Downtown Business District

ENR Basis 5630

	Quantity	Unit	Unit Cost	Total Cost
Storage Tank Construction				
Concrete - Slab on Grade	1284	CY	$300.0	$385,271
Concrete - Walls	630	CY	$450.0	$283,385
Concrete - Elevated Slab	336	CY	$450.0	$151,139
Common Excavation	20,514	CY	$14.0	$287,198
Backfill - Imported Material (Including Compaction)	11,304	CY	$29.0	$327,804
Backfill - Native Material (Including Compaction)	2,826	CY	$9.0	$25,433
Disposal of Excess Excavation	17,688	CY	$10.0	$176,882
Trench Support - Soldier Pile/Sheet	30,783	SF	$11.0	$338,615
Street/Surface Restoration				
Removal and Disposal of Asphalt	1,024	SY	$14.5	$14,848
6" Thick Base Course - Mineral Aggregate Type 2	1,024	SY	$5.5	$5,632
Pavement, Cem Conc CL 6 (1-1/2), 12"	1,024	SY	$40.0	$40,960
Pavement, Cem Conc CL 6 (1-1/2), 8" w/ 2" Asphalt Wearing Course	0	SY	$0.0	$0
Underflow Pumps and Assoc. Mechanical Equipment	2.90	MGD		$152,955
Specialty Items - Description				
				$0
				$0

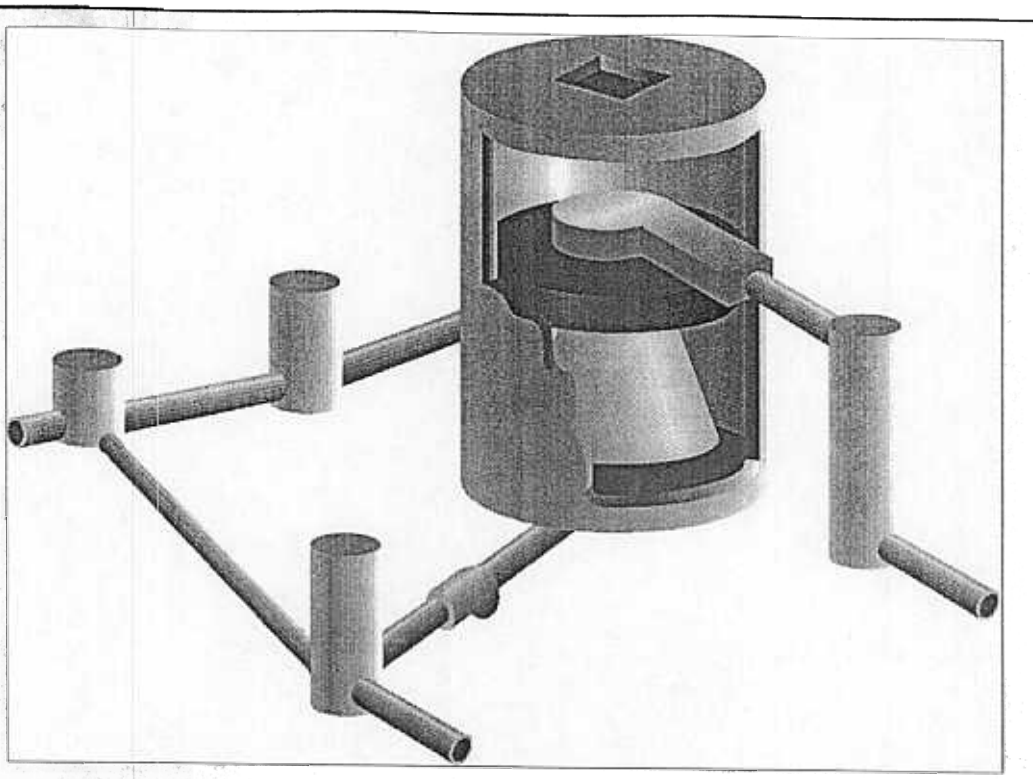

Drainage Basin: Industrial

CSO Control Alternative: Vortex Separator Treatment

Location: Connecticut/King

ENR 5630 for estimate

Sizing: 80 mgd @ 4.9 gpm/sq ft

3.9 MG available storage

Item Description	Quantity	Unit	Unit Cost	Total Cost
Concrete	6,849	CY	$363.5	$2,489,391
Temporary Sheeting and Shoring	77,376	SF	$11.0	$851,136
Excavation	63,488	CY	$14.0	$888,832
Backfill-Native	8,867	CY	$9.0	$79,801
Backfill - Imported	35,467	CY	$29.0	$1,028,549
Disposal of Excess Excavation	54,621	CY	$10.0	$546,212
Piling	30230	LF	$16.5	$498,795
Street Restoration	2,560	SY	$60.0	$153,600
Mechanical Equipment (Vortex units and pumps)	12	EA	$327,577	$3,930,922
Flow Control Gates	12	EA	$10,000	$120,000
Miscellaneous Mechanical/Washdown System	12	EA	$53,576	$642,906
Chemical Feed, Incl Chlorination/Dechlorination	75	LS	$1,632,000	$1,632,000
Specialty Items				$0
			Subtotal	**$12,862,144**
Landscaping	1	LS	1.5%	$192,932
Odor Control	1	LS	1.0%	$128,621
Utility Interference/Relocation	1	LS	5.0%	$643,107
Dewatering	1	LS	2.5%	$321,554
Mobilization/Demobilization	1	LS	10.0%	$1,414,836
Contractor's O & P	1	LS	10.0%	$1,414,836
			Subtotal	**$16,978,031**
Contingency			30%	$5,093,409
Sales Tax			8.2%	$1,809,858
	ESTIMATED CONSTRUCTION COST			**$23,881,298**
Design and Owner Management			35%	$8,358,454
Property Acquisition	21000	SF	$17	$357,000
	TOTAL PROJECT COST			**$32,600,000**

CSO Control Alternative: Vortex - First Stage Treatment Plant
Data Input Form and Unit Cost Data Input Form

Input Data in Shaded Cells

Flowrate (mgd) 80 Surface Loading Rate (gpm/sq ft) 5.0 Target
4.90 Actual

Assumed Diameter of Vortex Units 38

Req'd Vortex Units (No.)	Concrete Circular Walls (CY)	Concrete Floor (CY)	Concrete Top Slab (CY)	Req'd Y Piles (No.)	Control Gates (ea)
10	3,292	1,575	840	315	10

Max WS elevation -14 GS elevation 7

Height above ground -21

Estimated Depth of Excavation (ft) 62

Req'd Vortex Units (No.)	Excavation (CY)	Backfill (CY)	Backfill Native Mat'l (CY)	Backfill Imported Material (CY)	Haul Excess Material (CY)	Temporary Shoring (SF)	Y Street Restoration (SY)
10	52,907	36,945	7,389	29,556	45,518	52,551	2,560

LAND USE CLASSIFICATION WHERE FACILITY IS LOCATED* 2

* 1=Residential, 2=Commercial/Industrial, and 3=Highrise/Downtown Business District

ENR Basis 5630

	Quantity	Unit	Unit Cost	Total Cost
Storage Tank Construction				
Concrete - Slab on Grade	3,292	CY	$300.0	$987,704
Concrete - Walls	1,575	CY	$450.0	$708,824
Concrete - Elevated Slab	840	CY	$450.0	$378,039
Common Excavation	52,907	CY	$14.0	$740,693
Backfill - Imported Material (Including Compaction)	29,556	CY	$29.0	$857,124
Backfill - Native Material (Including Compaction)	7,389	CY	$9.0	$66,501
Disposal of Excess Excavation	45,518	CY	$10.0	$455,177
Trench Support - Soldier Pile/Sheet	52,551	SF	$11.0	$578,063
Street/Surface Restoration				
Removal and Disposal of Asphalt	2,560	SY	$14.5	$37,120
6" Thick Base Course - Mineral Aggregate Type 2	2,560	SY	$5.5	$14,080
Pavement, Cem Conc CL 6 (1-1/2), 12"	2,560	SY	$40.0	$102,400
Pavement, Cem Conc CL 6 (1-1/2), 8" w/ 2" Asphalt Wearing Course	0	SY	$0.0	$0
Underflow Pumps and Assoc. Mechanical Equipment	8.00	MGD		$332,954
Specialty Items - Description				
				$0
				$0

CSO Control Alternative: Vortex - Second Stage Treatment Plant
Data Input Form and Unit Cost Data Input Form

Input Data in Shaded Cells

Percentage flow from Primary Units 10.0%
Flowrate (mgd) 8 Surface Loading Rate (gpm/sq ft) 2.0 Target
Assumed Diameter of Vortex Units 38 2.45 Actual

Req'd Vortex Units	Concrete Circular Walls (CY)	Concrete Floor (CY)	Concrete Top Slab (CY)	Piles (No.)	Sluice Gates (ea)
2	658	315	168	63	2

Max WS elevation -14 GS elevation 7
Height above ground -21

Estimated Depth of Excavation (ft) 62

Req'd Storage Volume (MG)	Excavation (CY)	Backfill (CY)	Backfill Native Mat'l (CY)	Backfill imported Material (CY)	Haul Excess Material (CY)	Temporary Shoring (SF)	Street Restoration (SY)
2	10,581	7,389	1,478	5,911	9,104	24,825	512

LAND USE CLASSIFICATION WHERE FACILITY IS LOCATED* 2

* 1=Residential, 2=Commercial/Industrial, and 3=Highrise/Downtown Business District

ENR Basis 5630

	Quantity	Unit	Unit Cost	Total Cost
Storage Tank Construction				
Concrete - Slab on Grade	658	CY	$300.0	$197,541
Concrete - Walls	315	CY	$450.0	$141,693
Concrete - Elevated Slab	168	CY	$450.0	$75,569
Common Excavation	10,581	CY	$14.0	$148,139
Backfill - Imported Material (Including Compaction)	5,911	CY	$29.0	$171,425
Backfill - Native Material (Including Compaction)	1,478	CY	$9.0	$13,300
Disposal of Excess Excavation	9,104	CY	$10.0	$91,035
Trench Support - Soldier Pile/Sheet	24,825	SF	$11.0	$273,073
Street/Surface Restoration				
Removal and Disposal of Asphalt	512	SY	$14.5	$7,424
6" Thick Base Course - Mineral Aggregate Type 2	512	SY	$5.5	$2,816
Pavement, Cem Conc CL 6 (1-1/2), 12"	512	SY	$40.0	$20,480
Pavement, Cem Conc CL 6 (1-1/2), 8" w/ 2" Asphalt Wearing Course	0	SY	$0.0	$0
Underflow Pumps and Assoc. Mechanical Equipment	1.60	MGD		$107,073
Specialty Items - Description				
				$0
				$0

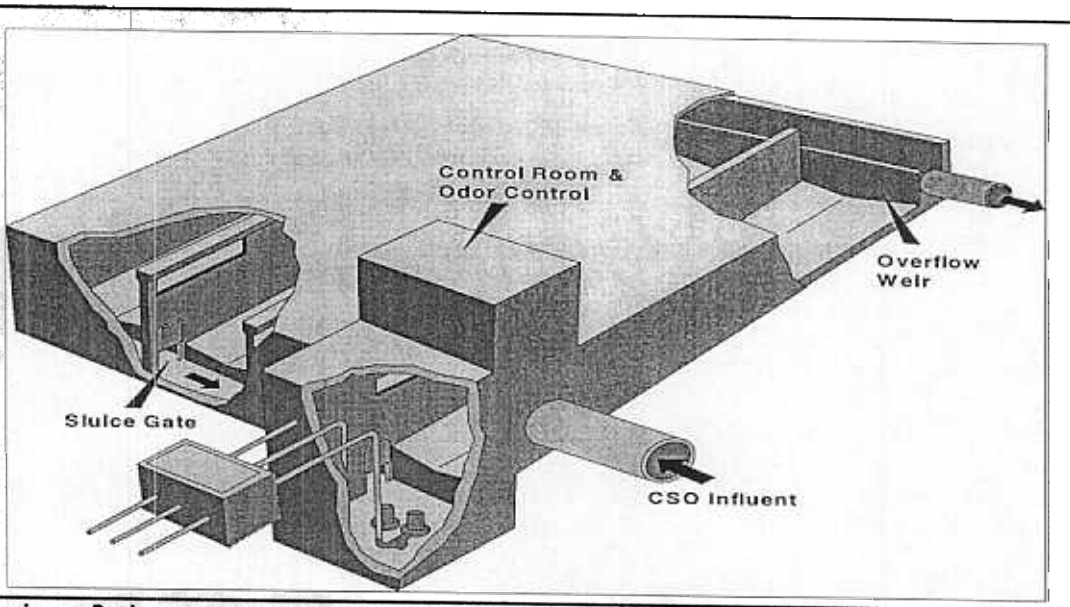

Drainage Basin: Kingdome Industrial **CSO Control Alternative:** Rectangular Primary Sedimentation

Location: Hanford/Lander Regulators

ENR 5630 for estimate **Sizing:** 145.0 mgd 4.8 MG Volume

Item Description	Req'd	Quantity	Unit	Unit Cost	Total Cost
Concrete		7,730	CY	$347.5	$2,686,500
Temporary Sheeting and Shoring		26,300	SF	$11.0	$289,300
Excavation		37,940	CY	$14.0	$531,160
Backfill-Native		2,494	CY	$9.0	$22,446
Backfill - Imported		9,976	CY	$29.0	$289,304
Disposal of Excess Excavation		35,446	CY	$10.0	$354,460
Piling	N	0	LF	$16.5	$0
Sluice Gates		5	EA	$50,000.0	$250,000
Drainage Pumps and Assoc. Mech./Elect. Equip.		1	LS		$219,496
Street Restoration	Y	2,950	SY	$60.0	$177,000
Utility Interference/Relocation	Y	5,900	SY	$50.0	$295,000
Grit Removal	N	0	MGD	$30,000.0	$0
Chem. Feed/Chlorination	Y	145	MGD	$20,400.0	$2,958,000
Specialty Items:					$7,420,853
				Subtotal	**$15,493,519**
Miscellaneous Mechanical/Washdown System		1	LS	5.0%	$774,676
Landscaping		1	LS	6.0%	$929,611
Odor Control		1	LS	5.0%	$774,676
Traffic Control		1	LS	$50,000	$50,000
Dewatering		1	LS	2.5%	$387,338
Mobilization/Demobilization		1	LS	10.0%	$1,840,982
Contractor's O & P		1	LS	10.0%	$1,840,982
				Subtotal	**$22,091,783**
Contingency				30%	$6,627,535
Sales Tax				8.2%	$2,354,984
		ESTIMATED CONSTRUCTION COST			**$31,074,303**
Design and Owner Management				35%	$10,876,006
Property Acquisition		58000	SF	$17	$986,000
Conveyance 72-in force main discharge		1	LS		$5,022,240
		TOTAL PROJECT COST			**$47,960,000**

CSO Control Alternative: Treatment - Rectangular Primary Sedimentation
Data Input Form and Unit Cost Data Input Form

Input Data in Shaded Cells

Assumptions

Peak Overflow Rate	3400	gpd/SF	**Design Flow**	145	mgd
Cover Depth, ft	-5		Over Excavation		
Side Water Depth, ft	15		Bottom	5	ft
Top Slab, ft	0		Sides	5	ft
Bottom Slab, ft	3		Wall Thickness		
Freeboard, ft	1.5		Exterior	2	ft
Length/Width Ratio	3		Interior	1.25	ft
Target Stage Width, ft	25		Tank Width	128	ft
Actual Stage Width, ft	23.8		Tank Length	370	ft
			Excavation Depth	19.5	ft

Calculated Quantities

Comp'td Storage Volume (MG)	Concrete: Base Slab (CY)	Concrete: Walls (CY)	Concrete: Top Slab (CY)	Piles (No.)	Sluice Gates (ea)	Hours Req'd to Drain Tank
4.8	5,280	2,450	0	970	5	24

Comp'td Storage Volume (MG)	Excavation (CY)	Backfill (CY)	Backfill Native Mat'l (CY)	Backfill Imported Material (CY)	Haul Excess Material (CY)	Temporary Shoring (SF)	Street Restoration (SY)
4.8	37,940	12,470	2,494	9,976	35,446	26,300	2,950

LAND USE CLASSIFICATION WHERE STORAGE IS LOCATED* 2

* 1=Residential, 2=Commercial/Industrial, and 3=Highrise/Downtown Business District

Estimated Costs

ENR Basis 5630

	Quantity	Unit	Unit Cost	Total Cost
Storage Tank Construction				
Concrete - Slab on Grade	5280	CY	$300.0	$1,584,000
Concrete - Walls	2450	CY	$450.0	$1,102,500
Concrete - Elevated Slab	0	CY	$450.0	$0
Common Excavation	37,940	CY	$14.0	$531,160
Backfill - Imported Material (Including Compaction)	9,976	CY	$29.0	$289,304
Backfill - Native Material (Including Compaction)	2,494	CY	$9.0	$22,446
Disposal of Excess Excavation	35,446	CY	$10.0	$354,460
Trench Support - Soldier Pile/Sheet	26,300	SF	$11.0	$289,300
Street/Surface Restoration				
Removal and Disposal of Asphalt	2,950	SY	$14.5	$42,775
6" Thick Base Course - Mineral Aggregate Type 2	2,950	SY	$5.5	$16,225
Pavement, Cem Conc CL 6 (1-1/2), 12"	2,950	SY	$40.0	$118,000
Pavement, Cem Conc CL 6 (1-1/2), 8" w/ 2" Asphalt Wearing Course	0	SY	$0.0	$0
Pumps, Associated Piping and Mechical/Electrical Equipment				
Pumps and Associated Piping	4.79	MGD		$146,820
Misc. Mechanical Equipment	1	LS	30.0%	$44,046
Electrical Systems	1	LS	15.0%	$28,630
Specialty Items - Description				
Forcemain--72 inch Size 36 inch		FT	$812.7	$0
Influent Pump Station	145.0	MGD		$5,359,412
Regulator	3	LS	$310,000	$930,000
Hnad railing and cover	47437	LF	$23.9	$1,131,441

Drainage Basin: Kingdome/Industria **CSO Control Alternative:** Circular CSO Treatment

Location: Connecticut-King

ENR 5630 for estimate **Sizing:** 75.0 mgd 2.1 MG

No. of Units: 2

Item Description	Unit	Quantity	Unit	Unit Cost	Total Cost
Concrete	2	1,390	CY	$331.3	$921,000
Temporary Sheeting and Shoring	2	11,300	SF	$11.0	$248,600
Excavation	2	8,430	CY	$14.0	$236,040
Backfill-Native	2	268	CY	$9.0	$4,824
Backfill - Imported	2	1,072	CY	$29.0	$62,176
Disposal of Excess Excavation	2	8,162	CY	$10.0	$163,240
Piling	2	0	LF	$16.5	$0
Flow Control Gates	2	1	EA	$10,000.0	$20,000
Drainage Pumps and Assoc. Mech./Elect. I	2	1	LS		$175,460
Street Restoration	1	1,100	SY	$60.0	$66,000
Utility Interference/Relocation	2	1,100	SY	$50.0	$110,000
Specialty Items	2				$6,849,425
				Subtotal	**$8,856,765**
Miscellaneous Mechanical/Washdown System		1	LS	5.0%	$442,838
Aeration		1	LS	3.0%	$265,703
Landscaping		1	LS	6.0%	$531,406
Odor Control		1	LS	5.0%	$442,838
Traffic Control		1	LS	$50,000	$50,000
Dewatering		1	LS	2.5%	$221,419
Mobilization/Demobilization		1	LS	10.0%	$1,081,097
Contractor's O & P		1	LS	10.0%	$1,081,097
				Subtotal	**$12,973,164**
Contingency				30%	$3,891,949
Sales Tax				8.2%	$1,382,939
	ESTIMATED CONSTRUCTION COST				**$18,248,052**
Design and Owner Management				35%	$6,386,818
Property Acquisition	2	13000	SF	$17	$442,000
Conveyance 1000-ft of 72-inch forcemain		1	LS		$2,511,120
New Regulator Station-Connecticut		1	LS		$732,718
New Regulator Station-King					$732,718
1800-ft 36-in pipeline King to Connecticut					$2,099,665
	TOTAL PROJECT COST				**$31,160,000**

CSO Control Alternative: Storage - Below Grade Rectangular Tank Storage
Data Input Form and Unit Cost Data Input Form

Input Data in Shaded Cells

Assumptions

Peak Overflow Rate	4000	gpd/SF	**Design Flow**	37.5 mgd each unit
Cover Depth, ft	-5		Over Excavation:	
Side Water Depth, ft	15		Bottom	5 ft
Top Slab, ft	0		Sides	5 ft
Bottom Slab, ft	3		Wall Thickness	1.3 ft
Freeboard, ft	1.5			
Tank Diam. ft				
Excavation Depth, ft				

Calculated Quantities

Storage Volume per unit (MG)	Concrete: Base Slab (CY)	Walls (CY)	Top Slab (CY)	Columns (CY)	Req'd N Piles (No.)	Sluice Gates (ea)	Hours Req'd to Drain Tank
1.1	1,100	260	0	30	0	1	24

Comp'd Storage Volume (MG)	Excavation (CY)	Backfill (CY)	Backfill Native Mat'l (CY)	Backfill Imported Material (CY)	Haul Excess Material (CY)	Temporary Shoring (SF)	Y Street Restoration (SY)
1.1	8,430	1,340	268	1,072	8,162	11,300	1,100

LAND USE CLASSIFICATION WHERE STORAGE IS LOCATED* 2

* 1=Residential, 2=Commercial/Industrial, and 3=Highrise/Downtown Business District

Estimated Costs

ENR Basis 5630

	Quantity	Unit	Unit Cost	Total Cost
Storage Tank Construction				
Concrete - Slab on Grade	1100	CY	$300.0	$330,000
Concrete - Walls	260	CY	$450.0	$117,000
Concrete - Elevated Slab	0	CY	$450.0	$0
Concrete - Columns	30	CY	$450.0	$13,500
Common Excavation	8,430	CY	$14.0	$118,020
Backfill - Imported Material (Including Compaction)	1,072	CY	$29.0	$31,088
Backfill - Native Material (Including Compaction)	268	CY	$9.0	$2,412
Disposal of Excess Excavation	8,162	CY	$10.0	$81,620
Trench Support - Soldier Pile/Sheet	11,300	SF	$11.0	$124,300
Street/Surface Restoration				
Removal and Disposal of Asphalt	1,100	SY	$14.5	$15,950
6" Thick Base Course - Mineral Aggregate Type 2	1,100	SY	$5.5	$6,050
Pavement, Cem Conc CL 6 (1-1/2), 12"	1,100	SY	$40.0	$44,000
Pavement, Cem Conc CL 6 (1-1/2), 8" w/ 2" Asphalt Wearing Course	0	SY	$0.0	$0
Pumps, Associated Piping and Mechical/Electrical Equipment				
Pumps and Associated Piping	1.05	MGD		$58,682
Misc. Mechanical Equipment	1	LS	30.0%	$17,605
Electrical Systems	1	LS	15.0%	$11,443
Specialty Items - Description				
Disenfection and Chemical Addition	38	mgd	$20,400.0	$1,530,000
Influent Pumps	37.5	mgd		$1,672,999
	9827	SF	$22.6	$221,714
		FT		$0

Drainage Basin: Industrial

CSO Control Alternative: Circular CSO Treatment

Location: Brandon Regulator

ENR 5630 for estimate

Sizing: 25.0 mgd 0.7 MG

Item Description	Quantity	Unit	Unit Cost	Total Cost
Concrete	970	CY	$335.6	$325,500
Temporary Sheeting and Shoring	9,440	SF	$11.0	$103,840
Excavation	5,880	CY	$14.0	$82,320
Backfill-Native	220	CY	$9.0	$1,980
Backfill - Imported	880	CY	$29.0	$25,520
Disposal of Excess Excavation	5,660	CY	$10.0	$56,600
Piling	0	LF	$16.5	$0
Flow Control Gates	1	EA	$10,000.0	$10,000
Drainage Pumps and Assoc. Mech./Elect. Equip.	1	LS		$62,979
Street Restoration	800	SY	$60.0	$48,000
Utility Interference/Relocation	800	SY	$50.0	$40,000
Specialty Items				$3,064,040
			Subtotal	**$3,820,779**
Miscellaneous Mechanical/Washdown System	1	LS	5.0%	$191,039
Aeration	1	LS	3.0%	$114,623
Landscaping	1	LS	6.0%	$229,247
Odor Control	1	LS	5.0%	$191,039
Traffic Control	1	LS	$50,000	$50,000
Dewatering	1	LS	2.5%	$95,519
Mobilization/Demobilization	1	LS	10.0%	$469,225
Contractor's O & P	1	LS	10.0%	$469,225
			Subtotal	**$5,630,695**
Contingency			30%	$1,689,209
Sales Tax			8.2%	$600,232
ESTIMATED CONSTRUCTION COST				**$7,920,136**
Design and Owner Management			35%	$2,772,047
Property Acquisition	9000	SF	$17	$153,000
Conveyance New Regulator Station	1	LS		$732,000
TOTAL PROJECT COST				**$25,300,000**

CSO Control Alternative: Storage/Treatment - Above Grade Circular Tank
Data Input Form and Unit Cost Data Input Form

Input Data in Shaded Cells

Assumptions

Peak Overflow Rate	4000	gpd/SF	**Design Flow**	25	mgd
Cover Depth, ft	-5		Over Excavation:		
Side Water Depth, ft	15		Bottom	5	ft
Top Slab, ft	0		Sides	5	ft
Bottom Slab, ft	3		Wall Thickness	1.3	ft
Freeboard, ft	1.5				
Tank Diam, ft	89				
Excavation Depth, ft	19.5				

Calculated Quantities

Comp'd Storage Volume (MG)	Concrete: Base Slab (CY)	Concrete: Walls (CY)	Concrete: Top Slab (CY)	Concrete: Columns (CY)	Req'd N Piles (No.)	Sluice Gates (ea)	Hours Req'd to Drain Tank
0.7	740	210	0	20	0	1	48

Comp'd Storage Volume (MG)	Excavation (CY)	Backfill (CY)	Backfill Native Mat'l (CY)	Backfill Imported Material (CY)	Haul Excess Material (CY)	Temporary Shoring (SF)	Y Street Restoration (SY)
0.7	5,880	1,100	220	880	5,660	9,440	800

LAND USE CLASSIFICATION WHERE STORAGE IS LOCATED*	2

* 1=Residential, 2=Commercial/Industrial, and 3=Highrise/Downtown Business District

Estimated Costs

ENR Basis 5630

	Quantity	Unit	Unit Cost	Total Cost
Storage Tank Construction				
Concrete - Slab on Grade	740	CY	$300.0	$222,000
Concrete - Walls	210	CY	$450.0	$94,500
Concrete - Elevated Slab	0	CY	$450.0	$0
Concrete - Columns	20	CY	$450.0	$9,000
Common Excavation	5,880	CY	$14.0	$82,320
Backfill - Imported Material (Including Compaction)	880	CY	$29.0	$25,520
Backfill - Native Material (Including Compaction)	220	CY	$9.0	$1,980
Disposal of Excess Excavation	5,660	CY	$10.0	$56,600
Trench Support - Soldier Pile/Sheet	9,440	SF	$11.0	$103,840
Street/Surface Restoration				
Removal and Disposal of Asphalt	800	SY	$14.5	$11,600
6" Thick Base Course - Mineral Aggregate Type 2	800	SY	$5.5	$4,400
Pavement, Cem Conc CL 6 (1-1/2), 12"	800	SY	$40.0	$32,000
Pavement, Cem Conc CL 6 (1-1/2), 8" w/ 2" Asphalt Wearing Course	0	SY	$0.0	$0
Pumps, Associated Piping and Mechical/Electrical Equipment				
Pumps and Associated Piping	0.35	MGD		$42,126
Misc. Mechanical Equipment	1	LS	30.0%	$12,638
Electrical Systems	1	LS	15.0%	$8,215
Specialty Items - Description				
Disenfection and chemicals	25	mgd	$20,400.0	$1,530,000
Influent Pumps	25	mgd		$904,870
Hand railing and cover	6620	SF	$23.1	$153,170
Forcemain--36 inch	1360	FT	$350.0	$476,000

Drainage Basin: Industrial

CSO Control Alternative: Circular CSO Treatment

Location: Michigan

ENR 5630 for estimate

Sizing: 75.0 mgd 2.1 MG 2

Item Description	Unit	Quantity	Unit	Unit Cost	Total Cost
Concrete	2	1,390	CY	$331.3	$921,000
Temporary Sheeting and Shoring	2	11,300	SF	$11.0	$248,600
Excavation	2	8,430	CY	$14.0	$236,040
Backfill-Native	2	268	CY	$9.0	$4,824
Backfill - Imported	2	1,072	CY	$29.0	$62,176
Disposal of Excess Excavation	2	8,162	CY	$10.0	$163,240
Piling	2	0	LF	$16.5	$0
Flow Control Gates	2	1	EA	$10,000.0	$20,000
Drainage Pumps and Assoc. Mech./Elect. I	2	1	LS		$175,460
Street Restoration	1	1,100	SY	$60.0	$66,000
Utility Interference/Relocation	2	1,100	SY	$50.0	$110,000
Specialty Items	2				$3,503,428
				Subtotal	**$5,510,768**
Miscellaneous Mechanical/Washdown System		1	LS	5.0%	$275,538
Aeration		1	LS	3.0%	$165,323
Landscaping		1	LS	6.0%	$330,646
Odor Control		1	LS	5.0%	$275,538
Traffic Control		1	LS	$50,000	$50,000
Dewatering		1	LS	2.5%	$137,769
Mobilization/Demobilization		1	LS	10.0%	$674,558
Contractor's O & P		1	LS	10.0%	$674,558
				Subtotal	**$8,094,700**
Contingency				30%	$2,428,410
Sales Tax				8.2%	$862,895
	ESTIMATED CONSTRUCTION COST				**$11,386,004**
Design and Owner Management				35%	$3,985,102
Property Acquisition	2	13000	SF	$17	$442,000
Conveyance See Page 3		1	LS		$13,023,620
	TOTAL PROJECT COST				**$28,837,000**

CSO Control Alternative: Storage/Treatment - Above Grade Circular Tank
Data Input Form and Unit Cost Data Input Form

Input Data in Shaded Cells

Assumptions

Peak Overflow Rate	4000	gpd/SF	**Design Flow**	37.5 mgd
Cover Depth, ft	-5		Over Excavation:	
Side Water Depth, ft	15		Bottom	5 ft
Top Slab, ft	0		Sides	5 ft
Bottom Slab, ft	3		Wall Thickness	1.3 ft
Freeboard, ft	1.5			
Tank Diam. ft	109			
Excavation Depth, ft	19.5			

Calculated Quantities

Comp'd Storage Volume (MG)	Concrete: Base Slab (CY)	Walls (CY)	Top Slab (CY)	Columns (CY)	Req'd N Piles (No.)	Sluice Gates (ea)	Hours Req'd to Drain Tank
1.1	1,100	260	0	30	0	1	24

Comp'd Storage Volume (MG)	Excavation (CY)	Backfill (CY)	Backfill Native Mat'l (CY)	Backfill Imported Material (CY)	Haul Excess Material (CY)	Temporary Shoring (SF)	Y Street Restoration (SY)
1.1	8,430	1,340	268	1,072	8,162	11,300	1,100

LAND USE CLASSIFICATION WHERE STORAGE IS LOCATED* 2

* 1=Residential, 2=Commercial/Industrial, and 3=Highrise/Downtown Business District

Estimated Costs

ENR Basis 5630

	Quantity	Unit	Unit Cost	Total Cost
Storage Tank Construction				
Concrete - Slab on Grade	1100	CY	$300.0	$330,000
Concrete - Walls	260	CY	$450.0	$117,000
Concrete - Elevated Slab	0	CY	$450.0	$0
Concrete - Columns	30	CY	$450.0	$13,500
Common Excavation	8,430	CY	$14.0	$118,020
Backfill - Imported Material (Including Compaction)	1,072	CY	$29.0	$31,088
Backfill - Native Material (Including Compaction)	268	CY	$9.0	$2,412
Disposal of Excess Excavation	8,162	CY	$10.0	$81,620
Trench Support - Soldier Pile/Sheet	11,300	SF	$11.0	$124,300
Street/Surface Restoration				
Removal and Disposal of Asphalt	1,100	SY	$14.5	$15,950
6" Thick Base Course - Mineral Aggregate Type 2	1,100	SY	$5.5	$6,050
Pavement, Cem Conc CL 6 (1-1/2), 12"	1,100	SY	$40.0	$44,000
Pavement, Cem Conc CL 6 (1-1/2), 8" w/ 2" Asphalt Wearing Course	0	SY	$0.0	$0
Pumps, Associated Piping and Mechical/Electrical Equipment				
Pumps and Associated Piping	1.05	MGD		$58,682
Misc. Mechanical Equipment	1	LS	30.0%	$17,605
Electrical Systems	1	LS	15.0%	$11,443
Specialty Items - Description				
Disenfection and Chemical Addition	37.5	mgd	$20,400.0	$1,530,000
Influent Pumps		mgd		$0
Hand railing and cover	9827	SF	$22.6	$221,714
Forcemain--48 inch--half the cost		FT	$233.5	$0

Industrial	Circular CSO Treatment	Michigan

Specialty Conveyance Items

Item		Project Cost
Influent Pump Station	75 mgd	$8,739,391
New Regulator Station		$732,000
230-ft of 60-inch influent pipeline		$599,045
1350-ft of 60-inch effluent pipeline		$2,953,184
Total		$13,023,620

Project costs taken from other estimates for similar items

APPENDIX B

South Magnolia CSO Control Alternatives

Offline Storage Tank

METRO CSO 5-YEAR UPDATE
ALTERNATIVE INFORMATION SUMMARY

Alternative Name: Magnolia Storage

Alternative Type: (e.g., treatment, conveyance, separation) Storage

Affected CSOs:

CSO Name	Annual Base Volume, mg	Annual 1996 Volume, mg	Storm No. 6 1996 Volume, mg	Storm No. 6 Peak Rate, mgd
So. Magnolia	5.0	5.0 (5.0)	1.3 (1.3)	

*Values in parentheses are with West Point set point at 440 mgd.

Alternative Description:

This alternative involves the construction of a 1.3 million gallon tank south and west of the intersection of W. Lynn St. and 32nd Ave. W., in the Magnolia neighborhood. Sewage flow would be intercepted in a new diversion structure, located in 32nd Ave. W., and would flow by gravity into a underground storage tank. The tank would empty by gravity into a new sewer line which will connect to an existing manhole approximately 340 feet to the south, on 32nd Ave. W.

Major problems/barriers/issues to be resolved: (e.g., permitting, optimization)

Major issues associated with this alternative include obtaining the site designated for tank construction, and disruption to traffic in the vicinity of 32nd Ave. W., W. Lynn St., and Clise Pl. W.

Capital Cost (1994 $): $ 5.8 million (Attach cost summary spreadsheet and detailed cost estimates.)

6.0

Briefly describe the alternative's characteristics in each of the following categories:

CATEGORY	CHARACTERISTICS
Impact on Natural Environment	This alternative will affect receiving water quality by reducing the discharge of untreated sanitary sewage to surface water.
Impact on Social Environment	This alternative will result in some traffic disruption along 32nd Ave. W.
Impact on Public Health and Safety	Possible slight negative safety impacts due to traffic disruption during construction. Public health impacts equivalent to all other 1-year CSO reduction alternatives.
Fairness and Equity	This alternative will place several underground facilities along 32nd Ave. W. The land use in this area is predominantly commercial.
Economic Impacts	The capital cost of this alternative is $5.8 million.
Flexibility	This alternative does not preclude the implementation of other CSO control measures.

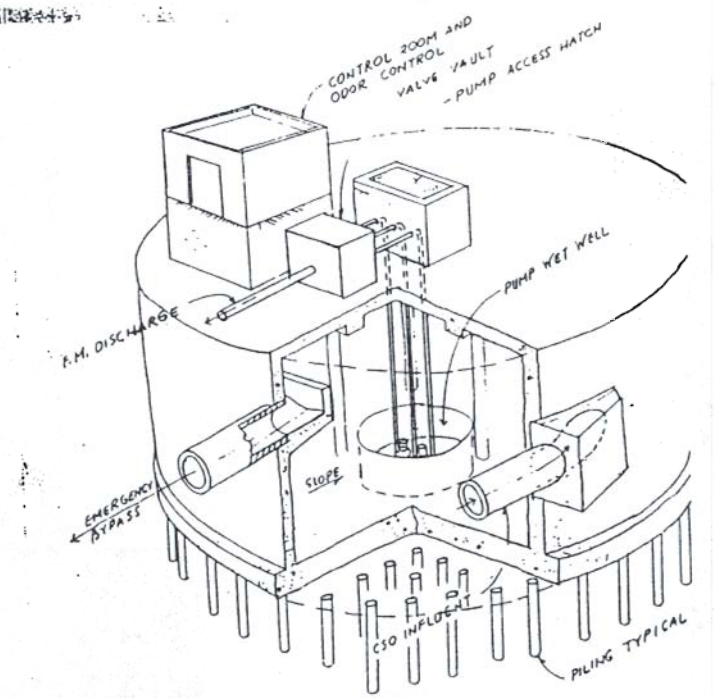

Drainage Basin: North Interceptor **CSO Control Element:** 1.3 MG Below Grade, Circular Storage Facility

Revised: 5/2/94 **Alternative Description:** Magnolia Storage

Item Description	Quant.	Unit	Unit Cost	Total Cost
Concrete	2,063	CY	$360	$742,680
Temporary Sheeting and Shoring	19,200	SF	$11.0	$211,200
Excavation	19,113	CY	$14.0	$267,584
Backfill - Native	2,140	CY	$9.0	$19,260
Backfill - Imported	8,560	CY	$29.0	$248,243
Disposal of Excess Excavation	16,973	CY	$10.0	$169,730
Piling	0	LF	$16.5	$0
Street Restoration	1,440	SY	$56.5	$81,360
Utility Interference/Relocation	1,440	SY	$100	$144,000
Pumps, Associated Piping and Mechanical Equipment	1	LS	$73,533	$73,533
			SUBTOTAL:	**$1,957,590**
Aeration (3%)	1	LS	$58,728	$58,728
Mechanical Washdown System (5%)	1	LS	$97,879	$97,879
Odor Control (5%)	1	LS	$97,879	$97,879
Traffic Control	1	LS	$50,000	$50,000
Dewatering (2.5%)	1	LS	$48,940	$48,940
Mobilization/Demobilization (10%)	1	LS	$231,102	$231,102
Contractor's O & P (10%)	1	LS	$231,102	$231,102
ESTIMATED CONSTRUCTION COST:				**$2,773,220**
Contingency (On Estimated Construction Cost)			30%	$831,966
Sales Tax (On Construction Cost and Contingency)			8.2%	$295,625
TOTAL ESTIMATED CONSTRUCTION COST:				**$3,900,811**
Design and Owner Management			35%	$1,365,284
Property Acquisition (Inc. 30% Contingency & 15% Management)	9,655	SF	$10	$96,550
TOTAL PROJECT COST:				**$5,362,645**

CSTOX.XLS

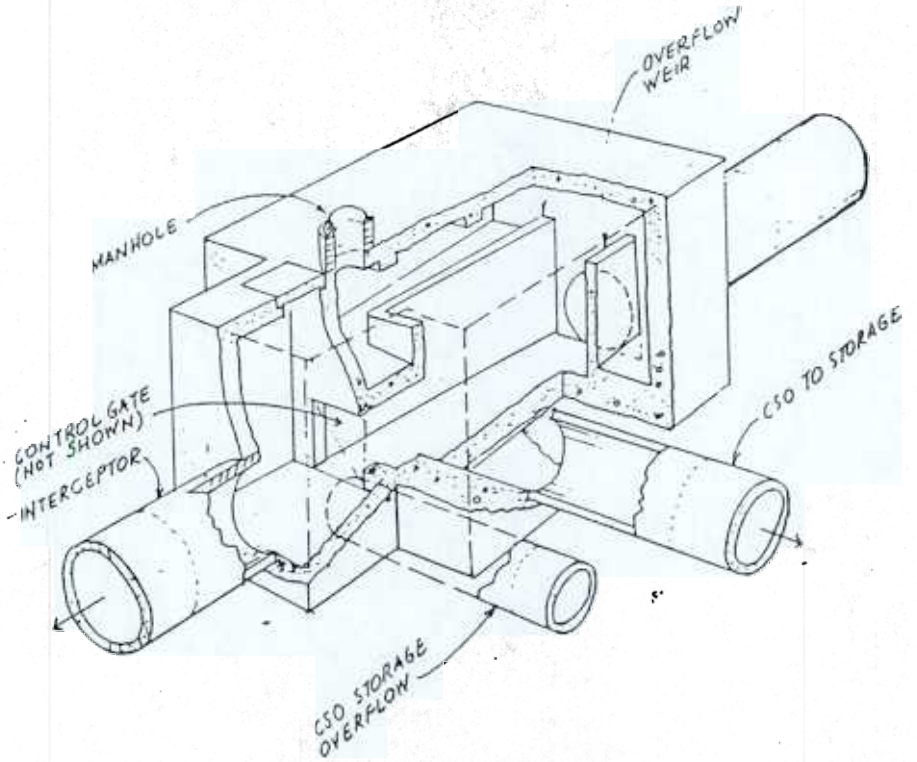

Drainage Basin: North Interceptor **CSO Control Element:** Flow Control Structure for 30" Interceptor

Revised: 5/2/94 **Alternative Description:** Magnolia Storage

Item Description	Quant.	Unit	Unit Cost	Total Cost
Concrete	32	CY	$410.0	$13,120
Temporary Sheeting and Shoring	1,757	SF	$11.0	$19,327
Excavation	221	CY	$14.0	$3,094
Backfill-Native	30	CY	$9.0	$270
Backfill - Imported	119	CY	$29.0	$3,451
Disposal of Excess Excavation	191	CY	$10.0	$1,910
Sluice Gates	1	EA	$44,000	$44,000
Street Restoration	36	SY	$56.5	$2,017
Demolish Existing Interceptor/Construct Temporary Bypass	1	LS	$5,577	$5,577
Traffic Control	1	LS	$50,000	$50,000
Utility Interference/Relocation	36	SY	$100.0	$3,571
Dewatering (2.5%)	1	LS	$3,658	$3,658
			SUBTOTAL:	**$149,996**
Mobilization/Demobilization (10%)	1	LS	$15,000	$15,000
Contractor's O & P (10%)	1	LS	$15,000	$15,000
			ESTIMATED CONSTRUCTION COST:	**$179,995**
Contingency (On Estimated Construction Cost)			30%	$53,998
Sales Tax (On Construction Cost and Contingency)			8.2%	$19,187
			TOTAL ESTIMATED CONSTRUCTION COST:	**$253,181**
Design and Owner Management			35%	$88,613
			TOTAL PROJECT COST:	**$341,794**

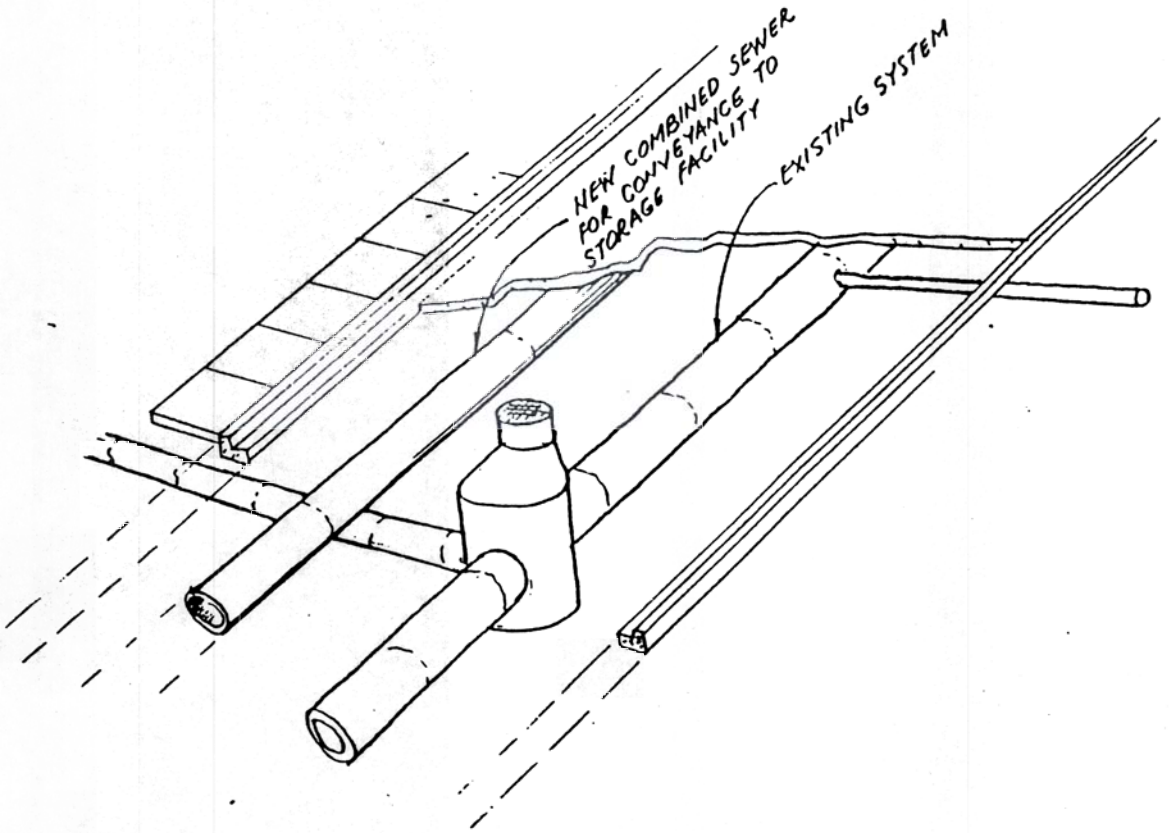

Drainage Basin: North Interceptor **CSO Control Element:** 30 LF of 12-Inch RCP

Revised: 5/2/94 **Alternative Description:** Magnolia Storage

Item Description	Quant.	Unit	Unit Cost	Total Cost
12 -Inch Diameter RCP	30	LF	$229.0	$6,870
-Inch Diameter RCP		LF		$0
-Inch Diameter RCP		LF		$0
-Inch Diameter RCP		LF		$0
Street Restoration	60	SY	$56.0	$3,360
			SUBTOTAL:	**$10,230**
Mobilization/Demobilization (10%)	1	LS	$1,023.0	$1,023
Contractor's O & P (10%)	1	LS	$1,023.0	$1,023
			ESTIMATED CONSTRUCTION COST:	**$12,276**
Contingency (On Estimated Construction Cost)			30%	$3,683
Sales Tax (On Construction Cost and Contingency)			8.2%	$1,309
			TOTAL ESTIMATED CONSTRUCTION COST:	**$17,267**
Design and Owner Management			35%	$6,044
			TOTAL PROJECT COST:	**$23,311**

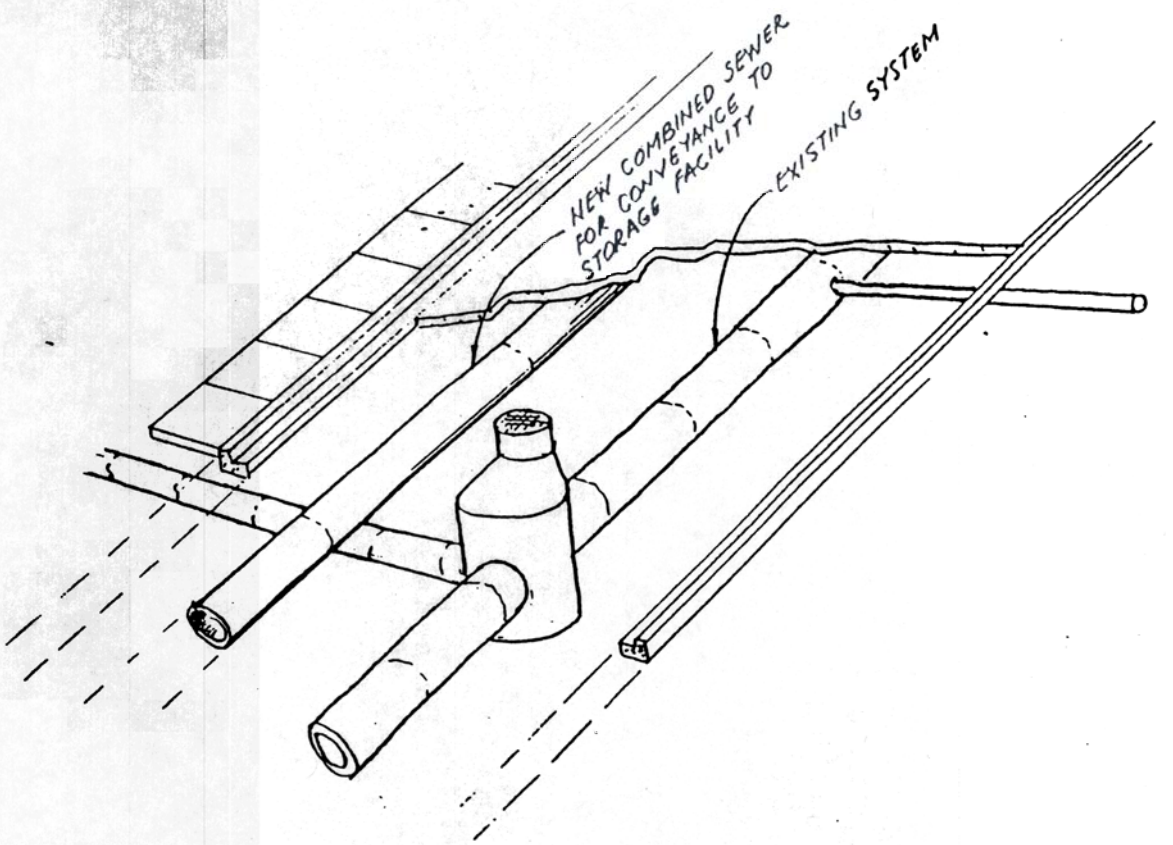

Drainage Basin: North Interceptor **CSO Control Element:** 340 LF of 12-Inch RCP

Revised: 5/2/94 **Alternative Description:** Magnolia Storage

Item Description	Quant.	Unit	Unit Cost	Total Cost
12 -Inch Diameter RCP	340	LF	$255.0	$86,700
-Inch Diameter RCP		LF		$0
-Inch Diameter RCP		LF		$0
-Inch Diameter RCP		LF		$0
Street Restoration	680	SY	$56.0	$38,080
			SUBTOTAL:	**$124,780**
Mobilization/Demobilization (10%)	1	LS	$12,478.0	$12,478
Contractor's O & P (10%)	1	LS	$12,478.0	$12,478
			ESTIMATED CONSTRUCTION COST:	**$149,736**
Contingency (On Estimated Construction Cost)			30%	$44,921
Sales Tax (On Construction Cost and Contingency)			8.2%	$15,962
			TOTAL ESTIMATED CONSTRUCTION COST:	**$210,619**
Design and Owner Management			35%	$73,717
			TOTAL PROJECT COST:	**$284,335**

APPENDIX C

North Interceptor CSO Control Alternatives

All CSO Deep Tunnel Storage
University to 6th Ave. Deep Tunnel Storage
Near Surface Storage Tanks
CSO Treatment
Individual CSO Control Alternatives

Deep Tunnel Cost Estimates

The following pages contain a preliminary estimate for the Deep Tunnel System included in the RWSP Service Strategy 4. All final estimates for Deep Tunnel storage construction included in the Tasks 4 and 5 report were made by projections from these estimates by use of unit costs on an inch-diameter-foot basis. The total estimate from the following pages was converted to a unit cost which was then used to develop estimates for different diameters and lengths.

SUMMARY OF ALTERNATIVES
WW2020 Deep Tunnel Alternatives

Revision Date: 1/6/95 11:29

Alternative: Deep Tunnel Alternative w/16' I.D. Tunnel
KCM

Component	Project Cost	Spreadsheet Name
72,200 LF of 24' I.D. Deep Tunnel	$909,554,233	DTTSTO-A.XLS
63,200 LF of 16' I.D. Deep Tunnel	$527,704,114	DTTSTO-B.XLS
11,800 LF of 8' I.D. Deep Tunnel	$58,477,898	DTTSTO-C.XLS
80 MGD Pump Station - 3rd Avenue West	$9,100,675	DTHFPS-A.XLS
56 MGD Pump Station - 3rd Avenue West	$7,368,060	DTHFPS-B.XLS
100 MGD Pump Station - Renton Site	$10,544,431	DTHFPS-C.XLS
3.5 MG Rectangular Storage Facility - Chelan CSO	$19,066,732	DTRSTO-A.XLS
1,200 LF of 36" RCP - Brandon (35'Deep)	$1,528,547	DTSEWR-A.XLS
Total Alternative Cost:	**$1,543,344,690**	

Alternative: Deep Tunnel Alternative w/17.5' I.D. Tunnel
KCM

Component	Project Cost	Spreadsheet Name
72,200 LF of 24' I.D. Deep Tunnel	$909,554,233	DTTSTO-A.XLS
63,200 LF of 17.5' I.D. Deep Tunnel	$574,640,467	DTTSTO-D.XLS
11,800 LF of 8' I.D. Deep Tunnel	$58,477,898	DTTSTO-C.XLS
80 MGD Pump Station - 3rd Avenue West	$9,100,675	DTHFPS-A.XLS
56 MGD Pump Station - 3rd Avenue West	$7,368,060	DTHFPS-B.XLS
100 MGD Pump Station - Renton Site	$10,544,431	DTHFPS-C.XLS
3.5 MG Rectangular Storage Facility - Chelan CSO	$19,066,732	DTRSTO-A.XLS
1,200 LF of 36" RCP - Brandon (35'Deep)	$1,528,547	DTSEWR-A.XLS
Total Alternative Cost:	**$1,590,281,043**	

Alternative: Deep Tunnel Alternative
KCM 15' I.D. Deep Tunnels (w/30' Wide Shafts)

Component	Project Cost	Spreadsheet Name
72,200 LF of 15' I.D. Deep Tunnel	$584,434,970	DTTSTO-E.XLS
63,200 LF of 15' I.D. Deep Tunnel	$497,013,267	DTTSTO-F.XLS
11,800 LF of 8' I.D. Deep Tunnel	$58,477,898	DTTSTO-C.XLS
80 MGD Pump Station - 3rd Avenue West	$9,100,675	DTHFPS-A.XLS
56 MGD Pump Station - 3rd Avenue West	$7,368,060	DTHFPS-B.XLS
100 MGD Pump Station - Renton Site	$10,544,431	DTHFPS-C.XLS
3.5 MG Rectangular Storage Facility - Chelan CSO	$19,066,732	DTRSTO-A.XLS
1,200 LF of 36" RCP - Brandon (35'Deep)	$1,528,547	DTSEWR-A.XLS
Total Alternative Cost:	**$1,187,534,580**	

SUMMARY OF ALTERNATIVES
WW2020 Deep Tunnel Alternatives
Revision Date: 1/6/95 11:29

Alternative: Deep Tunnel Alternative
KCM/B&C Cost Estimate is Phased Over 65 Years

PHASE I - Complete by 2000

Component	Project Cost	Spreadsheet Name
4,000 LF of 17.5' I.D. Deep Tunnel - From the Kenmore PS South (Includes Drop Shaft/Regulator at Kenmore PS)	$40,365,237	DTTSTO-G.XLS
3.0 MGD PS (Including 4000 LF of 12-inch Force Main)	$1,901,516	DTLFPS-A.XLS
Subtotal for Phase I:	**$42,266,753**	

PHASE II - Complete by 2005

Component	Project Cost	Spreadsheet Name
30,000 LF of 24' I.D. Deep Tunnel - Westlake/Nickerson to Duwamish PS (Includes Drop Shafts/Regulators at Westlake/Mercer, King Street, Connecticut Street, Lander Street and Hanford Street)	$363,640,394	DTTSTO-H.XLS
5,400 LF of 17.5' I.D. Deep Tunnel - 3rd Ave. West to Westlake/Nickerson (Includes Drop Shaft/Regulator at 3rd Avenue West)	$52,477,804	DTTSTO-I.XLS
5,400 LF of 8' I.D. Deep Tunnel - From Denny Regulator to Big Tunnel (Includes Drop Shaft/Regulator at Denny Regulator)	$26,929,245	DTTSTO-J.XLS
80 MGD Pump Station - 3rd Ave. West	$9,100,675	DTHFPS-A.XLS
Subtotal for Phase II:	**$452,148,118**	

PHASE III - Complete by 2010

Component	Project Cost	Spreadsheet Name
53,800 LF of 17.5' I.D. Deep Tunnel - From Kenmore to Westlake/Nickerson (Includes 500 ft of 36" micro-tunnel adit for the Montlake Regulator and a Drop Shaft/Regulator at University.	$484,585,298	DTTSTO-K.XLS
Subtotal for Phase III:	**$484,585,298**	

(Continued on Next Page)

SUMMARY OF ALTERNATIVES
WW2020 Deep Tunnel Alternatives

Revision Date: 1/6/95 11:29

PHASE IV - Complete by 2030

Component	Project Cost	Spreadsheet Name
42,200 LF of 24' I.D. Deep Tunnel - From Duwamish PS to Renton (Includes Drop Structures/Regulators at Duwamish PS, Michigan St., Norfolk Regulator, MLK Way Overflow, and Renton)	$510,686,454	DTTSTO-L.XLS
3,500 LF of 8' I.D. Deep Tunnel - Henderson Street Adit	$17,409,746	DTTSTO-M.XLS
2,900 LF of 8' I.D. Deep Tunnel - Duwamish PS to Big Tunnel	$15,151,003	DTTSTO-N.XLS
5,800 LF of 8' I.D. Deep Tunnel - From Harbor Regulator to Duwamish PS (Includes Drop Structures/Regulators at West Seattle PS and the Chelan Regulator)	$27,605,123	DTTSTO-O.XLS
1,200 LF of 36" RCP - Brandon (35'Deep)	$1,528,547	DTSEWR-A.XLS
100 MGD Pump Station - Renton Site	$10,544,431	DTHFPS-C.XLS
(Auxiliary CSO Facilities - Source: CSO 5 Year Update)		
Magnolia Storage Alternative (1.3 MG Total Storage)	$6,012,085	From CSO Update
8th Avenue S. CHOSE Storage Alternative (Option 1) - (1.3 MG Total Storag	$6,143,624	From CSO Update
Separate Ballard/City CSO Storage Alternative (1.0 MG Total Storage)	$6,943,872	From CSO Update
1.7 MG Rectangular Storage at 11th Ave. NW (Spreadsheet BRSTO3.XLS)	$9,171,913	From CSO Update
West Seattle Off-Line Storage Alternative (1.5 MG Total Storage)	$11,691,352	From CSO Update
Southwest Michigan Street Regulator Alternative	$349,271	From CSO Update
North Beach Pump Station Storage/Pumping Upgrade	$3,500,000	Metro Pre-Design

Subtotal for Phase IV: $626,737,421

PHASE V - Complete by 2050

Component	Project Cost	Spreadsheet Name
56 MGD Pump Station - 3rd Avenue West (Includes 35,100 LF of (3) 27" Diameter Force Mains in Parallel and 35,100 LF of Paved Tunnel Invert)	$41,360,448	DTHFPS-D.XLS

Subtotal for Phase V: $41,360,448

PHASE 1

Drainage Basin: _____ **CSO Control Element:** 4,000 LF of 17.5' I.D. Deep Tunnel

Alternative Description: Deep Tunnel Alternative - Phase I - From Kenmore PS

Revised: 1/5/95

Item Description		Quantity	Unit	Unit Cost	Total Cost
Tunnel Construction -	17.5 -Ft Diameter Tunnel	4,000	LF	$3,615.0	$14,460,000
Inlet Shaft Construction		1	EA	$1,415,940	$1,415,940
Outlet Shaft Construction		1	EA	$413,850	$413,850
Intermediate Shaft Construction		0	LS	$0	$0
Inlet Structure		1	LS	$300,000	$300,000
Street/Surface Restoration		633	SY	$56.5	$35,783
Traffic Control		4,000	LF	$20.0	$80,000
Utility Interference/Relocation		633	SY	$200.0	$126,667
Regulator/Drop Structures		1	EA	$500,000.0	$500,000.0
				SUBTOTAL:	**$17,332,240**
Mobilization/Demobilization (10%)		1	LS	$1,733,224	$1,733,224
Contractor's O & P (10%)		1	LS	$1,733,224	$1,733,224
	ESTIMATED CONSTRUCTION COST:				**$20,798,688**
	Contingency (On Estimated Construction Cost)			30%	$6,239,606
	Sales Tax (On Construction Cost and Contingency)			8.2%	$2,217,140
	TOTAL ESTIMATED CONSTRUCTION COST:				**$29,255,435**
	Design and Owner Management			35%	$10,239,402
Property Acquisition (Inc. 30% Contingency & 15% Management)		51,200	SF	$17	$870,400
	TOTAL PROJECT COST:				**$40,365,237**

CSO Control Alternative: Storage - Tunnel Storage
Data Input Form

Input Data in Shaded Cells

Input Parameters for Tunnel Boring				
Actual Tunnel Diameter (FT)	Bored Diameter (FT)	Length of Tunnel Boring (FT)		Tunnel Classification*
17.5	20.5	4,000		2

* 1=Shallow Tunnel, 2=Deep Tunnel

Note: Based on an analysis of the West Seattle Tunnel bid estimates and project estimates for the RTA tunnel project, the raw tunnel unit costs were decreased to $11.5 and $16.5 per in-dia/ft for shallow, simple tunnels and deep,complex tunnels respectively.

Input Parameters for Shaft Construction			
	Width (ft)	Length (ft)	Depth (ft)
Inlet Shaft	30	150	100
Outlet Shaft	30	40	94
Intermediate Shaft			
Intermediate Shaft			
Intermediate Shaft			

CSO Control Alternative: Storage - Tunnel Storage
Unit Cost Input Form

Input Data in Shaded Cells

	Quantity	Unit	Unit Cost	Total Cost
Tunnel Construction				
Tunnel Boring Including Initial Liner and Final Liner	4000	LF	$3,465.0	$13,860,000
Disposal of Excess Excavation	12	CY/LF	$12.5	$600,000
Shaft Construction				
Inlet Shaft Excavation	16,667	CY	$14.0	$233,338
Inlet Shaft Sheeting and Shoring	36,000	SF	$11.0	$396,000
Inlet Shaft Tremie Slab	2,500	CY	$200.0	$500,000
Backfill Around Inlet Shaft - Native Material	13,334	CY	$9.0	$120,006
Disposal of Excess Inlet Shaft Excavation	3,333	CY	$12.5	$41,663
Dewatering Inlet Shaft (10% of inlet shaft construction)	1	LS	$124,934	$124,934
Outlet Shaft Excavation	4,178	CY	$14.0	$58,492
Outlet Shaft Sheeting and Shoring	13,160	SF	$11.0	$144,760
Outlet Shaft Tremie Slab	667	CY	$200.0	$133,400
Backfill Around Outlet Shaft - Native Material	3,342	CY	$9.0	$30,078
Disposal of Excess Outlet Shaft Excavation	836	CY	$12.5	$10,450
Dewatering Outlet Shaft (10% of outlet shaft construction)	1	LS	$36,673	$36,673
Intermediate Shaft Excavation	0	CY	$14.0	$0
Intermediate Shaft Sheeting and Shoring	0	SF	$11.0	$0
Intermediate Shaft Tremie Slabs	0	CY	$200.0	$0
Backfill Around Intermediate Shafts - Native Material	0	CY	$9.0	$0
Disposal of Excess Intermediate Shaft Excavation	0	CY	$12.5	$0
Dewatering Intermediate Shafts (10% of intermediate shaft constructior	1	LS	$0	$0
Street/Surface Restoration				
Removal and Disposal of Asphalt	633	SY	$14.5	$9,183
6" Thick Base Course - Mineral Aggregate Type 2	633	SY	$5.5	$3,483
Pavement, Cem Conc CL 6 (1-1/2), 12"	N/A	SY	N/A	N/A
Pavement, Cem Conc CL 6 (1-1/2), 8" w/ 2" Asphalt Wearing Course	633	SY	$36.5	$23,117
Right-of-Way/Land Acquisition	51,200	SF	$11.5	$870,400
Specialty Items - Description				
Regulator/Drop Structures	1	EA	$500,000.0	$500,000
				$0
				$0
				$0
				$0

Drainage Basin: _____ **CSO Control Element:** 3.0 MGD Pump Station & Force Main

Revised: 1/5/95 **Alternative Description:** Deep Tunnel Alternative - Phase I

Item Description	Quant.	Unit	Unit Cost	Total Cost
Concrete	607	CY	$440	$267,080
Temporary Sheeting and Shoring	0	SF	$11.0	$0
Excavation	0	CY	$14.0	$0
Backfill - Native	0	CY	$9.0	$0
Backfill - Imported	0	CY	$29.0	$0
Disposal of Excess Excavation	0	CY	$10.0	$0
Street Restoration	0	SY	$56.5	$0
Utility Interference/Relocation	0	SY	$100	$0
Pumps, Associated Piping and Mechanical Equipment	1	LS	$202,578	$202,578
Miscellaneous Mechanical Equipment	1	LS	$60,773	$60,773
Electrical Equipment (15% of pump and mechanical equip.)	1	LS	$39,503	$39,503
12-inch Diameter Force Main Installed in Tunnel	4,000	LF	$35.0	$140,000.0
			SUBTOTAL:	**$709,934**
Aeration (3%)	1	LS	$21,298	$21,298
Odor Control (5%)	1	LS	$35,497	$35,497
Traffic Control	1	LS	$50,000	$50,000
Dewatering (2.5%)	1	LS	$17,748	$17,748
Mobilization/Demobilization (10%)	1	LS	$83,448	$83,448
Contractor's O & P (10%)	1	LS	$83,448	$83,448
			ESTIMATED CONSTRUCTION COST:	**$1,001,372**
Contingency (On Estimated Construction Cost)			30%	$300,412
Sales Tax (On Construction Cost and Contingency)			8.2%	$106,746
			TOTAL ESTIMATED CONSTRUCTION COST:	**$1,408,531**
Design and Owner Management			35%	$492,986
			TOTAL PROJECT COST:	**$1,901,516**

CSO Control Alternative: Conveyance - Low Flow Pump Station (5< Q< 30 MGD)
Data Input and Unit Price Input Form

Input Data in Shaded Cells

REQUIRED PUMP CAPACITY (MGD):	3.0
HIGH HEAD OR LOW HEAD PUMP*:	2

* 1= Low Head (<= 40 Feet Static Head)
2 = High Head (> 40 Feet Static Head)

Pump Costs* ($)	Concrete (CY)		
	Base Slab (CY)	Top Slab (CY)	Walls (CY)
$202,578	42	39	526

* Pump cost includes pumps, motors, associated piping, valves, and fittings.

Excavation (SF)	Backfill (CY)	Backfill Native Mat'l (CY)	Backfill Imported Material (CY)	Haul Excess Material (CY)	Temporary Shoring (SF)	Surface Restoration (SY)
0	0	0	0	0	0	0

	Quant.	Unit	Unit Cost	Total Cost
Storage Tank Construction				
Concrete - Slab on Grade	42	CY	$300.0	$12,600
Concrete - Walls	526	CY	$450.0	$236,700
Concrete - Elevated Slab	39	CY	$450.0	$17,550
Common Excavation	0	CY	$14.0	$0
Backfill - Imported Material (Including Compaction)	0	CY	$29.0	$0
Backfill - Native Material (Including Compaction)	0	CY	$9.0	$0
Disposal of Excess Excavation	0	CY	$10.0	$0
Trench Support - Soldier Pile/Sheet	0	SF	$11.0	$0
Street/Surface Restoration				
Removal and Disposal of Asphalt	0	SY	$14.5	$0
6" Thick Base Course - Mineral Aggregate Type 2	0	SY	$5.5	$0
Pavement, Cem Conc CL 6 (1-1/2), 12"	N/A	SY	N/A	N/A
Pavement, Cem Conc CL 6 (1-1/2), 8" w/ 2" Asphalt Wearing Course	0	SY	$36.5	$0
Pumps, Associated Piping and Mechanical Equipment				
Pumps and Associated Piping	1	LS	$202,578	$202,578
Misc. Gates, Valves and Mech. Equip. (30% of Pumps and Piping Costs)	1	LS	60,773	$60,773
Electrical Systems Pertaining to Pump Systems	1	LS	$39,503	$39,503
Specialty Items - Description				
12-inch Diameter Force Main Installed in Tunnel	4000	LF	$35.0	$140,000
				$0

PHASE II

Drainage Basin: _____ **CSO Control Element:** 30,000 LF of 24' I.D. Deep Tunnel

Alternative Description: Deep Tunnel Alternative - Phase II - Westlake to Duwamish PS

Revised: 1/5/95

Item Description		Quantity	Unit	Unit Cost	Total Cost
Tunnel Construction -	24 -Ft Diameter Tunnel	30,000	LF	$5,014.5	$150,435,000
Inlet Shaft Construction		1	EA	$1,818,510	$1,818,510
Outlet Shaft Construction		1	EA	$601,100	$601,100
Intermediate Shaft Construction		0	LS	$0	$0
Inlet Structure		1	LS	$300,000	$300,000
Street/Surface Restoration		844	SY	$56.5	$47,711
Traffic Control		30,000	LF	$20.0	$600,000
Utility Interference/Relocation		844	SY	$200.0	$168,889
Regulator/Drop Structure		5	EA	$500,000.0	$2,500,000.0
				SUBTOTAL:	**$156,471,210**
Mobilization/Demobilization (10%)		1	LS	$15,647,121	$15,647,121
Contractor's O & P (10%)		1	LS	$15,647,121	$15,647,121
	ESTIMATED CONSTRUCTION COST:				**$187,765,452**
	Contingency (On Estimated Construction Cost)			30%	$56,329,636
	Sales Tax (On Construction Cost and Contingency)			8.2%	$20,015,797
	TOTAL ESTIMATED CONSTRUCTION COST:				**$264,110,885**
	Design and Owner Management			35%	$92,438,810
Property Acquisition (Inc. 30% Contingency & 15% Management)		417,100	SF	$17	$7,090,700
	TOTAL PROJECT COST:				**$363,640,394**

CSO Control Alternative: Storage - Tunnel Storage
Data Input Form

Input Data in Shaded Cells

Input Parameters for Tunnel Boring				
Actual Tunnel Diameter (FT)	Bored Diameter (FT)	Length of Tunnel Boring (FT)		Tunnel Classification*
24	27	30,000		2

* 1=Shallow Tunnel, 2=Deep Tunnel

Note: Based on an analysis of the West Seattle Tunnel bid estimates and project estimates for the RTA tunnel project, the raw tunnel unit costs were decreased to $11.5 and $16.5 per in-dia/ft for shallow, simple tunnels and deep,complex tunnels respectively.

Input Parameters for Shaft Construction			
	Width (ft)	Length (ft)	Depth (ft)
Inlet Shaft	40	150	105
Outlet Shaft	40	40	117
Intermediate Shaft			
Intermediate Shaft			
Intermediate Shaft			

CSO Control Alternative: Storage - Tunnel Storage
Unit Cost Input Form

Input Data in Shaded Cells

	Quantity	Unit	Unit Cost	Total Cost
Tunnel Construction				
Tunnel Boring Including Initial Liner and Final Liner	30000	LF	$4,752.0	$142,560,000
Disposal of Excess Excavation	21	CY/LF	$12.5	$7,875,000
Shaft Construction				
Inlet Shaft Excavation	23,333	CY	$14.0	$326,662
Inlet Shaft Sheeting and Shoring	39,900	SF	$11.0	$438,900
Inlet Shaft Tremie Slab	3,333	CY	$200.0	$666,600
Backfill Around Inlet Shaft - Native Material	18,666	CY	$9.0	$167,994
Disposal of Excess Inlet Shaft Excavation	4,667	CY	$12.5	$58,338
Dewatering Inlet Shaft (10% of inlet shaft construction)	1	LS	$160,016	$160,016
Outlet Shaft Excavation	6,933	CY	$14.0	$97,062
Outlet Shaft Sheeting and Shoring	18,720	SF	$11.0	$205,920
Outlet Shaft Tremie Slab	889	CY	$200.0	$177,800
Backfill Around Outlet Shaft - Native Material	5,546	CY	$9.0	$49,914
Disposal of Excess Outlet Shaft Excavation	1,387	CY	$12.5	$17,338
Dewatering Outlet Shaft (10% of outlet shaft construction)	1	LS	$53,070	$53,070
Intermediate Shaft Excavation	0	CY	$14.0	$0
Intermediate Shaft Sheeting and Shoring	0	SF	$11.0	$0
Intermediate Shaft Tremie Slabs	0	CY	$200.0	$0
Backfill Around Intermediate Shafts - Native Material	0	CY	$9.0	$0
Disposal of Excess Intermediate Shaft Excavation	0	CY	$12.5	$0
Dewatering Intermediate Shafts (10% of intermediate shaft constructior	1	LS	$0	$0
Street/Surface Restoration				
Removal and Disposal of Asphalt	844	SY	$14.5	$12,244
6" Thick Base Course - Mineral Aggregate Type 2	844	SY	$5.5	$4,644
Pavement, Cem Conc CL 6 (1-1/2), 12"	N/A	SY	N/A	N/A
Pavement, Cem Conc CL 6 (1-1/2), 8" w/ 2" Asphalt Wearing Course	844	SY	$36.5	$30,822
Right-of-Way/Land Acquisition	417,100	SF	$11.5	$7,090,700
Specialty Items - Description				
Regulator/Drop Structure	5	EA	$500,000.0	$2,500,000
				$0
				$0
				$0
				$0

Drainage Basin: _____ **CSO Control Element:** 5,400 LF of 17.5' I.D. Deep Tunnel

Alternative Description: Deep Tunnel Alternative - Phase II - 3rd Ave. West to Westlake

Revised: 1/5/95

Item Description		Quantity	Unit	Unit Cost	Total Cost
Tunnel Construction -	17.5 -Ft Diameter Tunnel	5,400	LF	$3,615.0	$19,521,000
Inlet Shaft Construction		1	EA	$1,563,140	$1,563,140
Outlet Shaft Construction		1	EA	$385,210	$385,210
Intermediate Shaft Construction		0	LS	$0	$0
Inlet Structure		1	LS	$300,000	$300,000
Street/Surface Restoration		600	SY	$56.5	$33,900
Traffic Control		5,400	LF	$20.0	$108,000
Utility Interference/Relocation		600	SY	$200.0	$120,000
Regulator/Drop Structure		1	EA	$500,000.0	$500,000.0
				SUBTOTAL:	**$22,531,250**
Mobilization/Demobilization (10%)		1	LS	$2,253,125	$2,253,125
Contractor's O & P (10%)		1	LS	$2,253,125	$2,253,125
	ESTIMATED CONSTRUCTION COST:				**$27,037,500**
	Contingency (On Estimated Construction Cost)			30%	$8,111,250
	Sales Tax (On Construction Cost and Contingency)			8.2%	$2,882,198
	TOTAL ESTIMATED CONSTRUCTION COST:				**$38,030,948**
	Design and Owner Management			35%	$13,310,832
Property Acquisition (Inc. 30% Contingency & 15% Management)		66,825	SF	$17	$1,136,025
	TOTAL PROJECT COST:				**$52,477,804**

CSO Control Alternative: Storage - Tunnel Storage
Data Input Form

Input Data in Shaded Cells

Input Parameters for Tunnel Boring				
Actual Tunnel Diameter (FT)	Bored Diameter (FT)	Length of Tunnel Boring (FT)		Tunnel Classification*
17.5	20.5	5,400		2

* 1=Shallow Tunnel, 2=Deep Tunnel

Note: Based on an analysis of the West Seattle Tunnel bid estimates and project estimates for the RTA tunnel project, the raw tunnel unit costs were decreased to $11.5 and $16.5 per in-dia/ft for shallow, simple tunnels and deep,complex tunnels respectively.

Input Parameters for Shaft Construction			
	Width (ft)	Length (ft)	Depth (ft)
Inlet Shaft	30	150	117
Outlet Shaft	30	30	119
Intermediate Shaft			
Intermediate Shaft			
Intermediate Shaft			

CSO Control Alternative: Storage - Tunnel Storage
Unit Cost Input Form

Input Data in Shaded Cells

	Quantity	Unit	Unit Cost	Total Cost
Tunnel Construction				
Tunnel Boring Including Initial Liner and Final Liner	5400	LF	$3,465.0	$18,711,000
Disposal of Excess Excavation	12	CY/LF	$12.5	$810,000
Shaft Construction				
Inlet Shaft Excavation	19,500	CY	$14.0	$273,000
Inlet Shaft Sheeting and Shoring	42,120	SF	$11.0	$463,320
Inlet Shaft Tremie Slab	2,500	CY	$200.0	$500,000
Backfill Around Inlet Shaft - Native Material	15,600	CY	$9.0	$140,400
Disposal of Excess Inlet Shaft Excavation	3,900	CY	$12.5	$48,750
Dewatering Inlet Shaft (10% of inlet shaft construction)	1	LS	$137,672	$137,672
Outlet Shaft Excavation	3,967	CY	$14.0	$55,538
Outlet Shaft Sheeting and Shoring	14,280	SF	$11.0	$157,080
Outlet Shaft Tremie Slab	500	CY	$200.0	$100,000
Backfill Around Outlet Shaft - Native Material	3,174	CY	$9.0	$28,566
Disposal of Excess Outlet Shaft Excavation	793	CY	$12.5	$9,913
Dewatering Outlet Shaft (10% of outlet shaft construction)	1	LS	$34,118	$34,118
Intermediate Shaft Excavation	0	CY	$14.0	$0
Intermediate Shaft Sheeting and Shoring	0	SF	$11.0	$0
Intermediate Shaft Tremie Slabs	0	CY	$200.0	$0
Backfill Around Intermediate Shafts - Native Material	0	CY	$9.0	$0
Disposal of Excess Intermediate Shaft Excavation	0	CY	$12.5	$0
Dewatering Intermediate Shafts (10% of intermediate shaft constructior	1	LS	$0	$0
Street/Surface Restoration				
Removal and Disposal of Asphalt	600	SY	$14.5	$8,700
6" Thick Base Course - Mineral Aggregate Type 2	600	SY	$5.5	$3,300
Pavement, Cem Conc CL 6 (1-1/2), 12"	N/A	SY	N/A	N/A
Pavement, Cem Conc CL 6 (1-1/2), 8" w/ 2" Asphalt Wearing Course	600	SY	$36.5	$21,900
Right-of-Way/Land Acquisition	66,825	SF	$11.5	$1,136,025
Specialty Items - Description				
Regulator/Drop Structure	1	EA	$500,000.0	$500,000
				$0
				$0
				$0
				$0

Drainage Basin: _____ **CSO Control Element:** 5,400 LF of 8' I.D. Deep Tunnel

Alternative Description: Deep Tunnel Alternative - Phase II - Denny Regulator Adit

Revised: 1/5/95

Item Description		Quantity	Unit	Unit Cost	Total Cost
Tunnel Construction -	8 -Ft Diameter Tunnel	5,400	LF	$1,634.0	$8,823,600
Inlet Shaft Construction		1	EA	$1,141,830	$1,141,830
Outlet Shaft Construction		1	EA	$490,660	$490,660
Intermediate Shaft Construction		0	LS	$0	$0
Inlet Structure		1	LS	$300,000	$300,000
Street/Surface Restoration		400	SY	$56.5	$22,600
Traffic Control		5,400	LF	$20.0	$108,000
Utility Interference/Relocation		400	SY	$200.0	$80,000
Regulator/Drop Structures		1	EA	$500,000.0	$500,000.0
				SUBTOTAL:	**$11,466,690**
Mobilization/Demobilization (10%)		1	LS	$1,146,669	$1,146,669
Contractor's O & P (10%)		1	LS	$1,146,669	$1,146,669
	ESTIMATED CONSTRUCTION COST:				**$13,760,028**
	Contingency (On Estimated Construction Cost)			30%	$4,128,008
	Sales Tax (On Construction Cost and Contingency)			8.2%	$1,466,819
	TOTAL ESTIMATED CONSTRUCTION COST:				**$19,354,855**
	Design and Owner Management			35%	$6,774,199
Property Acquisition (Inc. 30% Contingency & 15% Management)		47,070	SF	$17	$800,190
	TOTAL PROJECT COST:				**$26,929,245**

CSO Control Alternative: Storage - Tunnel Storage
Data Input Form

Input Data in Shaded Cells

Input Parameters for Tunnel Boring				
Actual Tunnel Diameter (FT)	Bored Diameter (FT)	Length of Tunnel Boring (FT)		Tunnel Classification*
8	11	5,400		2

* 1=Shallow Tunnel, 2=Deep Tunnel

Note: Based on an analysis of the West Seattle Tunnel bid estimates and project estimates for the RTA tunnel project, the raw tunnel unit costs were decreased to $11.5 and $16.5 per in-dia/ft for shallow, simple tunnels and deep,complex tunnels respectively.

Input Parameters for Shaft Construction			
	Width (ft)	Length (ft)	Depth (ft)
Inlet Shaft	20	150	111
Outlet Shaft	20	30	234
Intermediate Shaft			
Intermediate Shaft			
Intermediate Shaft			

CSO Control Alternative: Storage - Tunnel Storage
Unit Cost Input Form

Input Data in Shaded Cells

	Quantity	Unit	Unit Cost	Total Cost
Tunnel Construction				
Tunnel Boring Including Initial Liner and Final Liner	5400	LF	$1,584.0	$8,553,600
Disposal of Excess Excavation	4	CY/LF	$12.5	$270,000
Shaft Construction				
Inlet Shaft Excavation	12,333	CY	$14.0	$172,662
Inlet Shaft Sheeting and Shoring	37,740	SF	$11.0	$415,140
Inlet Shaft Tremie Slab	1,667	CY	$200.0	$333,400
Backfill Around Inlet Shaft - Native Material	9,866	CY	$9.0	$88,794
Disposal of Excess Inlet Shaft Excavation	2,467	CY	$12.5	$30,838
Dewatering Inlet Shaft (10% of inlet shaft construction)	1	LS	$101,000	$101,000
Outlet Shaft Excavation	5,200	CY	$14.0	$72,800
Outlet Shaft Sheeting and Shoring	23,400	SF	$11.0	$257,400
Outlet Shaft Tremie Slab	333	CY	$200.0	$66,600
Backfill Around Outlet Shaft - Native Material	4,160	CY	$9.0	$37,440
Disposal of Excess Outlet Shaft Excavation	1,040	CY	$12.5	$13,000
Dewatering Outlet Shaft (10% of outlet shaft construction)	1	LS	$43,424	$43,424
Intermediate Shaft Excavation	0	CY	$14.0	$0
Intermediate Shaft Sheeting and Shoring	0	SF	$11.0	$0
Intermediate Shaft Tremie Slabs	0	CY	$200.0	$0
Backfill Around Intermediate Shafts - Native Material	0	CY	$9.0	$0
Disposal of Excess Intermediate Shaft Excavation	0	CY	$12.5	$0
Dewatering Intermediate Shafts (10% of intermediate shaft constructior	1	LS	$0	$0
Street/Surface Restoration				
Removal and Disposal of Asphalt	400	SY	$14.5	$5,800
6" Thick Base Course - Mineral Aggregate Type 2	400	SY	$5.5	$2,200
Pavement, Cem Conc CL 6 (1-1/2), 12"	N/A	SY	N/A	N/A
Pavement, Cem Conc CL 6 (1-1/2), 8" w/ 2" Asphalt Wearing Course	400	SY	$36.5	$14,600
Right-of-Way/Land Acquisition	47,070	SF	$11.5	$800,190
Specialty Items - Description				
Regulator/Drop Structures	1	EA	$500,000.0	$500,000
				$0
				$0
				$0
				$0

Drainage Basin: _____ **CSO Control Element:** 80 MGD Pump Station - 3rd Ave. West

Revised: 1/5/95 **Alternative Description:** WW2020 - Deep Tunnel Alternative

Item Description	Quant.	Unit	Unit Cost	Total Cost
Concrete	1357	CY	$430	$583,510
Temporary Sheeting and Shoring	18429	SF	$11.0	$202,719
Excavation	7263	CY	$14.0	$101,682
Backfill - Native	1015	CY	$9.0	$9,135
Backfill - Imported	4060	CY	$29.0	$117,740
Disposal of Excess Excavation	6248	CY	$10.0	$62,480
Street Restoration	465	SY	$56.5	$26,273
Utility Interference/Relocation	465	SY	$100	$46,500
Pumps, Associated Piping and Mechanical Equipment	1	LS	$1,618,077	$1,618,077
Miscellaneous Mechanical Equipment	1	LS	$485,423	$485,423
Misc. Electrical Equipment (15% of pump and mech. costs)	1	LS	$315,525	$315,525
			SUBTOTAL:	**$3,569,064**
Aeration (3%)	1	LS	$107,072	$107,072
Odor Control (5%)	1	LS	$178,453	$178,453
Traffic Control	1	LS	$50,000	$50,000
Dewatering (2.5%)	1	LS	$89,227	$89,227
Mobilization/Demobilization (10%)	1	LS	$399,382	$399,382
Contractor's O & P (10%)	1	LS	$399,382	$399,382
	ESTIMATED CONSTRUCTION COST:			**$4,792,578**
	Contingency (On Estimated Construction Cost)		30%	$1,437,773
	Sales Tax (On Construction Cost and Contingency)		8.2%	$510,889
	TOTAL ESTIMATED CONSTRUCTION COST:			**$6,741,240**
	Design and Owner Management		35%	$2,359,434
	TOTAL PROJECT COST:			**$9,100,675**

CSO Control Alternative: Conveyance - High Flow Pump Station (30<Q<250 MGD)
Data Input and Unit Price Input Form

Input Data in Shaded Cells

REQUIRED PUMP CAPACITY (MGD):	80
HIGH HEAD OR LOW HEAD PUMP*:	N/A

* All high flow pumps stations are assumed to be high head pump stations

Pump Costs* ($)	Concrete (CY)		
	Base Slab (CY)	Top Slab (CY)	Walls (CY)
$1,618,077	183	157	1016

* Pump cost includes pumps, motors, associated piping, valves, and fittings.

Excavation (SF)	Backfill (CY)	Backfill Native Mat'l (CY)	Backfill Imported Material (CY)	Haul Excess Material (CY)	Temporary Shoring (SF)	Surface Restoration (SY)
7263	5075	1015	4060	6248	18429	465

	Quant.	Unit	Unit Cost	Total Cost
Storage Tank Construction				
Concrete - Slab on Grade	183	CY	$300.0	$54,900
Concrete - Walls	1016	CY	$450.0	$457,200
Concrete - Elevated Slab	157	CY	$450.0	$70,650
Common Excavation	7,263	CY	$14.0	$101,682
Backfill - Imported Material (Including Compaction)	4,060	CY	$29.0	$117,740
Backfill - Native Material (Including Compaction)	1,015	CY	$9.0	$9,135
Disposal of Excess Excavation	6,248	CY	$10.0	$62,480
Trench Support - Soldier Pile/Sheet	18,429	SF	$11.0	$202,719
Street/Surface Restoration				
Removal and Disposal of Asphalt	465	SY	$14.5	$6,743
6" Thick Base Course - Mineral Aggregate Type 2	465	SY	$5.5	$2,558
Pavement, Cem Conc CL 6 (1-1/2), 12"	N/A	SY	N/A	N/A
Pavement, Cem Conc CL 6 (1-1/2), 8" w/ 2" Asphalt Wearing Course	465	SY	$36.5	$16,973
Pumps, Associated Piping and Mechanical Equipment				
Pumps and Associated Piping	1	LS	$1,618,077	$1,618,077
Misc. Gates, Valves and Mech. Equip. (30% of Pumps and Piping Costs)	1	LS	485,423	$485,423
Electrical Systems Pertaining to Pump Systems	1	LS	$315,525	$315,525
Specialty Items - Description				
				$0
				$0

PHASE III

Drainage Basin: _____ CSO Control Element: 53,800 LF of 17.5' I.D. Deep Tunnel

Alternative Description: Deep Tunnel Alternative - Phase III - Kenmore to Westlake

Revised: 1/5/95

Item Description	Quantity	Unit	Unit Cost	Total Cost
Tunnel Construction - 17.5 -Ft Diameter Tunnel	53,800	LF	$3,615.0	$194,487,000
Inlet Shaft Construction	1	EA	$1,363,980	$1,363,980
Outlet Shaft Construction	1	EA	$341,260	$341,260
Intermediate Shaft Construction	1	LS	$4,660,250	$4,660,250
Inlet Structure	1	LS	$300,000	$300,000
Street/Surface Restoration	1,600	SY	$56.5	$90,400
Traffic Control	53,800	LF	$20.0	$1,076,000
Utility Interference/Relocation	1,600	SY	$200.0	$320,000
Regulator/Drop Structure	1	EA	$500,000.0	$500,000.0
36" I.D. Microtunnel to Montlake Regulator	500	LF	$695.0	$347,500.0
Concrete Paved Invert	10,000	LF	$450.0	$4,500,000.0
			SUBTOTAL:	**$207,986,390**
Mobilization/Demobilization (10%)	1	LS	$20,798,639	$20,798,639
Contractor's O & P (10%)	1	LS	$20,798,639	$20,798,639
ESTIMATED CONSTRUCTION COST:				**$249,583,668**
Contingency (On Estimated Construction Cost)			30%	$74,875,100
Sales Tax (On Construction Cost and Contingency)			8.2%	$26,605,619
TOTAL ESTIMATED CONSTRUCTION COST:				**$351,064,387**
Design and Owner Management			35%	$122,872,536
Property Acquisition (Inc. 30% Contingency & 15% Management)	626,375	SF	$17	$10,648,375
TOTAL PROJECT COST:				**$484,585,298**

CSO Control Alternative: Storage - Tunnel Storage
Data Input Form

Input Data in Shaded Cells

Input Parameters for Tunnel Boring				
Actual Tunnel Diameter (FT)	Bored Diameter (FT)	Length of Tunnel Boring (FT)		Tunnel Classification*
17.5	20.5	53,800		2

* 1=Shallow Tunnel, 2=Deep Tunnel

Note: Based on an analysis of the West Seattle Tunnel bid estimates and project estimates for the RTA tunnel project, the raw tunnel unit costs were decreased to $11.5 and $16.5 per in-dia/ft for shallow, simple tunnels and deep,complex tunnels respectively.

Input Parameters for Shaft Construction			
	Width (ft)	Length (ft)	Depth (ft)
Inlet Shaft	30	150	94
Outlet Shaft	30	30	100
Intermediate Shaft	30	150	123
Intermediate Shaft	30	150	279
Intermediate Shaft			

CSO Control Alternative: Storage - Tunnel Storage
Unit Cost Input Form

Input Data in Shaded Cells

	Quantity	Unit	Unit Cost	Total Cost
Tunnel Construction				
Tunnel Boring Including Initial Liner and Final Liner	53800	LF	$3,465.0	$186,417,000
Disposal of Excess Excavation	12	CY/LF	$12.5	$8,070,000
Shaft Construction				
Inlet Shaft Excavation	15,667	CY	$14.0	$219,338
Inlet Shaft Sheeting and Shoring	33,840	SF	$11.0	$372,240
Inlet Shaft Tremie Slab	2,500	CY	$200.0	$500,000
Backfill Around Inlet Shaft - Native Material	12,534	CY	$9.0	$112,806
Disposal of Excess Inlet Shaft Excavation	3,133	CY	$12.5	$39,163
Dewatering Inlet Shaft (10% of inlet shaft construction)	1	LS	$120,438	$120,438
Outlet Shaft Excavation	3,333	CY	$14.0	$46,662
Outlet Shaft Sheeting and Shoring	12,000	SF	$11.0	$132,000
Outlet Shaft Tremie Slab	500	CY	$200.0	$100,000
Backfill Around Outlet Shaft - Native Material	2,666	CY	$9.0	$23,994
Disposal of Excess Outlet Shaft Excavation	667	CY	$12.5	$8,338
Dewatering Outlet Shaft (10% of outlet shaft construction)	1	LS	$30,266	$30,266
Intermediate Shaft Excavation	67,000	CY	$14.0	$938,000
Intermediate Shaft Sheeting and Shoring	144,720	SF	$11.0	$1,591,920
Intermediate Shaft Tremie Slabs	5,360	CY	$200.0	$1,072,000
Backfill Around Intermediate Shafts - Native Material	53,600	CY	$9.0	$482,400
Disposal of Excess Intermediate Shaft Excavation	13,400	CY	$12.5	$167,500
Dewatering Intermediate Shafts (10% of intermediate shaft constructior	1	LS	$408,432	$408,432
Street/Surface Restoration				
Removal and Disposal of Asphalt	1,600	SY	$14.5	$23,200
6" Thick Base Course - Mineral Aggregate Type 2	1,600	SY	$5.5	$8,800
Pavement, Cem Conc CL 6 (1-1/2), 12"	N/A	SY	N/A	N/A
Pavement, Cem Conc CL 6 (1-1/2), 8" w/ 2" Asphalt Wearing Course	1,600	SY	$36.5	$58,400
Right-of-Way/Land Acquisition	626,375	SF	$11.5	$10,648,375
Specialty Items - Description				
Regulator/Drop Structure	1	EA	$500,000.0	$500,000
36" I.D. Microtunnel to Montlake Regulator	500	LF	$695.0	$347,500
Concrete Paved Invert	10000	LF	$450.0	$4,500,000
				$0
				$0

PHASE IV

INCLUDING ALL AUXILIARY
CSO FACILITIES

Drainage Basin: _____ **CSO Control Element:** 42,200 LF of 24' I.D. Deep Tunnel

Alternative Description: Deep Tunnel Alternative - Phase IV - Duwamish PS to Renton

Revised: 1/5/95

Item Description		Quantity	Unit	Unit Cost	Total Cost
Tunnel Construction -	24 -Ft Diameter Tunnel	42,200	LF	$5,014.5	$211,611,900
Inlet Shaft Construction		1	EA	$1,994,220	$1,994,220
Outlet Shaft Construction		1	EA	$559,510	$559,510
Intermediate Shaft Construction		1	LS	$1,517,740	$1,517,740
Inlet Structure		1	LS	$300,000	$300,000
Street/Surface Restoration		1,511	SY	$56.5	$85,378
Traffic Control		42,200	LF	$20.0	$844,000
Utility Interference/Relocation		1,511	SY	$200.0	$302,222
Regulator/Drop Structure		5	EA	$500,000.0	$2,500,000.0
				SUBTOTAL:	**$219,714,970**
Mobilization/Demobilization (10%)		1	LS	$21,971,497	$21,971,497
Contractor's O & P (10%)		1	LS	$21,971,497	$21,971,497
	ESTIMATED CONSTRUCTION COST:				**$263,657,964**
	Contingency (On Estimated Construction Cost)			30%	$79,097,389
	Sales Tax (On Construction Cost and Contingency)			8.2%	$28,105,939
	TOTAL ESTIMATED CONSTRUCTION COST:				**$370,861,292**
	Design and Owner Management			35%	$129,801,452
Property Acquisition (Inc. 30% Contingency & 15% Management)		589,630	SF	$17	$10,023,710
	TOTAL PROJECT COST:				**$510,686,454**

CSO Control Alternative: Storage - Tunnel Storage
Data Input Form

Input Data in Shaded Cells

Input Parameters for Tunnel Boring				
Actual Tunnel Diameter (FT)	Bored Diameter (FT)	Length of Tunnel Boring (FT)		Tunnel Classification*
24	27	42,200		2

* 1=Shallow Tunnel, 2=Deep Tunnel

Note: Based on an analysis of the West Seattle Tunnel bid estimates and project estimates for the RTA tunnel project, the raw tunnel unit costs were decreased to $11.5 and $16.5 per in-dia/ft for shallow, simple tunnels and deep,complex tunnels respectively.

Input Parameters for Shaft Construction			
	Width (ft)	Length (ft)	Depth (ft)
Inlet Shaft	40	150	122
Outlet Shaft	40	40	105
Intermediate Shaft	40	150	113
Intermediate Shaft			
Intermediate Shaft			

CSO Control Alternative: Storage - Tunnel Storage
Unit Cost Input Form

Input Data in Shaded Cells

	Quantity	Unit	Unit Cost	Total Cost
Tunnel Construction				
Tunnel Boring Including Initial Liner and Final Liner	42200	LF	$4,752.0	$200,534,400
Disposal of Excess Excavation	21	CY/LF	$12.5	$11,077,500
Shaft Construction				
Inlet Shaft Excavation	27,111	CY	$14.0	$379,554
Inlet Shaft Sheeting and Shoring	46,360	SF	$11.0	$509,960
Inlet Shaft Tremie Slab	3,333	CY	$200.0	$666,600
Backfill Around Inlet Shaft - Native Material	21,689	CY	$9.0	$195,201
Disposal of Excess Inlet Shaft Excavation	5,422	CY	$12.5	$67,775
Dewatering Inlet Shaft (10% of inlet shaft construction)	1	LS	$175,132	$175,132
Outlet Shaft Excavation	6,222	CY	$14.0	$87,108
Outlet Shaft Sheeting and Shoring	16,800	SF	$11.0	$184,800
Outlet Shaft Tremie Slab	889	CY	$200.0	$177,800
Backfill Around Outlet Shaft - Native Material	4,978	CY	$9.0	$44,802
Disposal of Excess Outlet Shaft Excavation	1,244	CY	$12.5	$15,550
Dewatering Outlet Shaft (10% of outlet shaft construction)	1	LS	$49,451	$49,451
Intermediate Shaft Excavation	25,111	CY	$14.0	$351,554
Intermediate Shaft Sheeting and Shoring	42,940	SF	$11.0	$472,340
Intermediate Shaft Tremie Slabs	1,590	CY	$200.0	$318,000
Backfill Around Intermediate Shafts - Native Material	20,089	CY	$9.0	$180,801
Disposal of Excess Intermediate Shaft Excavation	5,022	CY	$12.5	$62,775
Dewatering Intermediate Shafts (10% of intermediate shaft constructior	1	LS	$132,270	$132,270
Street/Surface Restoration				
Removal and Disposal of Asphalt	1,511	SY	$14.5	$21,911
6" Thick Base Course - Mineral Aggregate Type 2	1,511	SY	$5.5	$8,311
Pavement, Cem Conc CL 6 (1-1/2), 12"	N/A	SY	N/A	N/A
Pavement, Cem Conc CL 6 (1-1/2), 8" w/ 2" Asphalt Wearing Course	1,511	SY	$36.5	$55,156
Right-of-Way/Land Acquisition	589,630	SF	$11.5	$10,023,710
Specialty Items - Description				
Regulator/Drop Structure	5	EA	$500,000.0	$2,500,000
				$0
				$0
				$0
				$0

Drainage Basin: _____ **CSO Control Element:** 3,500 LF of 8' I.D. Deep Tunnel

Alternative Description: Deep Tunnel Alternative - Phase IV - Henderson Street Adit

Revised: 1/5/95

Item Description		Quantity	Unit	Unit Cost	Total Cost
Tunnel Construction -	8 -Ft Diameter Tunnel	3,500	LF	$1,634.0	$5,719,000
Inlet Shaft Construction		1	EA	$862,060	$862,060
Outlet Shaft Construction		1	EA	$373,290	$378,290
Intermediate Shaft Construction		0	LS	$0	$0
Inlet Structure		1	LS	$300,000	$300,000
Street/Surface Restoration		311	SY	$56.5	$17,578
Traffic Control		3,500	LF	$20.0	$70,000
Utility Interference/Relocation		311	SY	$200.0	$62,222
				SUBTOTAL:	**$7,409,150**
Mobilization/Demobilization (10%)		1	LS	$740,915	$740,915
Contractor's O & P (10%)		1	LS	$740,915	$740,915
	ESTIMATED CONSTRUCTION COST:				**$8,890,980**
	Contingency (On Estimated Construction Cost)			30%	$2,667,294
	Sales Tax (On Construction Cost and Contingency)			8.2%	$947,778
	TOTAL ESTIMATED CONSTRUCTION COST:				**$12,506,052**
	Design and Owner Management			35%	$4,377,118
Property Acquisition (Inc. 30% Contingency & 15% Management)		30,975	SF	$17	$526,575
	TOTAL PROJECT COST:				**$17,409,746**

CSO Control Alternative: Storage - Tunnel Storage
Data Input Form

Input Data in Shaded Cells

Input Parameters for Tunnel Boring				
Actual Tunnel Diameter (FT)	Bored Diameter (FT)	Length of Tunnel Boring (FT)		Tunnel Classification*
8	11	3,500		2

* 1=Shallow Tunnel, 2=Deep Tunnel

Note: Based on an analysis of the West Seattle Tunnel bid estimates and project estimates for the RTA tunnel project, the raw tunnel unit costs were decreased to $11.5 and $16.5 per in-dia/ft for shallow, simple tunnels and deep,complex tunnels respectively.

Input Parameters for Shaft Construction			
*	Width (ft)	Length (ft)	Depth (ft)
Inlet Shaft	20	110	113
Outlet Shaft	20	30	171
Intermediate Shaft			
Intermediate Shaft			
Intermediate Shaft			

CSO Control Alternative: Storage - Tunnel Storage
Unit Cost Input Form

Input Data in Shaded Cells

	Quantity	Unit	Unit Cost	Total Cost
Tunnel Construction				
Tunnel Boring Including Initial Liner and Final Liner	3500	LF	$1,584.0	$5,544,000
Disposal of Excess Excavation	4	CY/LF	$12.5	$175,000
Shaft Construction				
Inlet Shaft Excavation	9,207	CY	$14.0	$128,898
Inlet Shaft Sheeting and Shoring	29,380	SF	$11.0	$323,180
Inlet Shaft Tremie Slab	1,222	CY	$200.0	$244,400
Backfill Around Inlet Shaft - Native Material	7,366	CY	$9.0	$66,294
Disposal of Excess Inlet Shaft Excavation	1,841	CY	$12.5	$23,013
Dewatering Inlet Shaft (10% of inlet shaft construction)	1	LS	$76,277	$76,277
Outlet Shaft Excavation	3,800	CY	$14.0	$53,200
Outlet Shaft Sheeting and Shoring	17,100	SF	$11.0	$188,100
Outlet Shaft Tremie Slab	333	CY	$200.0	$66,600
Backfill Around Outlet Shaft - Native Material	3,040	CY	$9.0	$27,360
Disposal of Excess Outlet Shaft Excavation	760	CY	$12.5	$9,500
Dewatering Outlet Shaft (10% of outlet shaft construction)	1	LS	$33,526	$33,526
Intermediate Shaft Excavation	0	CY	$14.0	$0
Intermediate Shaft Sheeting and Shoring	0	SF	$11.0	$0
Intermediate Shaft Tremie Slabs	0	CY	$200.0	$0
Backfill Around Intermediate Shafts - Native Material	0	CY	$9.0	$0
Disposal of Excess Intermediate Shaft Excavation	0	CY	$12.5	$0
Dewatering Intermediate Shafts (10% of intermediate shaft constructior	1	LS	$0	$0
Street/Surface Restoration				
Removal and Disposal of Asphalt	311	SY	$14.5	$4,511
6" Thick Base Course - Mineral Aggregate Type 2	311	SY	$5.5	$1,711
Pavement, Cem Conc CL 6 (1-1/2), 12"	N/A	SY	N/A	N/A
Pavement, Cem Conc CL 6 (1-1/2), 8" w/ 2" Asphalt Wearing Course	311	SY	$36.5	$11,356
Right-of-Way/Land Acquisition	30,975	SF	$11.5	$526,575
Specialty Items - Description				
				$0
				$0
				$0
				$0
				$0

Drainage Basin: _____ **CSO Control Element:** 2,900 LF of 8' I.D. Deep Tunnel

Alternative Description: Deep Tunnel Alternative - Phase IV - Duwamish PS to Big Tunnel

Revised: 1/5/95

Item Description		Quantity	Unit	Unit Cost	Total Cost
Tunnel Construction -	8 -Ft Diameter Tunnel	2,900	LF	$1,634.0	$4,738,600
Inlet Shaft Construction		1	EA	$988,220	$988,220
Outlet Shaft Construction		1	EA	$260,550	$260,550
Intermediate Shaft Construction		0	LS	$0	$0
Inlet Structure		1	LS	$300,000	$300,000
Street/Surface Restoration		400	SY	$56.5	$22,600
Traffic Control		2,900	LF	$20.0	$58,000
Utility Interference/Relocation		400	SY	$200.0	$80,000
				SUBTOTAL:	**$6,447,970**
Mobilization/Demobilization (10%)		1	LS	$644,797	$644,797
Contractor's O & P (10%)		1	LS	$644,797	$644,797
	ESTIMATED CONSTRUCTION COST:				**$7,737,564**
	Contingency (On Estimated Construction Cost)			30%	$2,321,269
	Sales Tax (On Construction Cost and Contingency)			8.2%	$824,824
	TOTAL ESTIMATED CONSTRUCTION COST:				**$10,883,658**
	Design and Owner Management			35%	$3,809,280
Property Acquisition (Inc. 30% Contingency & 15% Management)		26,945	SF	$17	$458,065
	TOTAL PROJECT COST:				**$15,151,003**

CSO Control Alternative: Storage - Tunnel Storage
Data Input Form

Input Data in Shaded Cells

Input Parameters for Tunnel Boring				
Actual Tunnel Diameter (FT)	Bored Diameter (FT)	Length of Tunnel Boring (FT)		Tunnel Classification*
8	11	2,900		2

* 1=Shallow Tunnel, 2=Deep Tunnel

Note: Based on an analysis of the West Seattle Tunnel bid estimates and project estimates for the RTA tunnel project, the raw tunnel unit costs were decreased to $11.5 and $16.5 per in-dia/ft for shallow, simple tunnels and deep,complex tunnels respectively.

Input Parameters for Shaft Construction			
	Width (ft)	Length (ft)	Depth (ft)
Inlet Shaft	20	150	89
Outlet Shaft	20	30	105
Intermediate Shaft			
Intermediate Shaft			
Intermediate Shaft			

CSO Control Alternative: Storage - Tunnel Storage
Unit Cost Input Form

Input Data in Shaded Cells

	Quantity	Unit	Unit Cost	Total Cost
Tunnel Construction				
Tunnel Boring Including Initial Liner and Final Liner	2900	LF	$1,584.0	$4,593,600
Disposal of Excess Excavation	4	CY/LF	$12.5	$145,000
Shaft Construction				
Inlet Shaft Excavation	9,889	CY	$14.0	$138,446
Inlet Shaft Sheeting and Shoring	30,260	SF	$11.0	$332,860
Inlet Shaft Tremie Slab	1,667	CY	$200.0	$333,400
Backfill Around Inlet Shaft - Native Material	7,911	CY	$9.0	$71,199
Disposal of Excess Inlet Shaft Excavation	1,978	CY	$12.5	$24,725
Dewatering Inlet Shaft (10% of inlet shaft construction)	1	LS	$87,591	$87,591
Outlet Shaft Excavation	2,333	CY	$14.0	$32,662
Outlet Shaft Sheeting and Shoring	10,500	SF	$11.0	$115,500
Outlet Shaft Tremie Slab	333	CY	$200.0	$66,600
Backfill Around Outlet Shaft - Native Material	1,866	CY	$9.0	$16,794
Disposal of Excess Outlet Shaft Excavation	467	CY	$12.5	$5,838
Dewatering Outlet Shaft (10% of outlet shaft construction)	1	LS	$23,156	$23,156
Intermediate Shaft Excavation	0	CY	$14.0	$0
Intermediate Shaft Sheeting and Shoring	0	SF	$11.0	$0
Intermediate Shaft Tremie Slabs	0	CY	$200.0	$0
Backfill Around Intermediate Shafts - Native Material	0	CY	$9.0	$0
Disposal of Excess Intermediate Shaft Excavation	0	CY	$12.5	$0
Dewatering Intermediate Shafts (10% of intermediate shaft constructior	1	LS	$0	$0
Street/Surface Restoration				
Removal and Disposal of Asphalt	400	SY	$14.5	$5,800
6" Thick Base Course - Mineral Aggregate Type 2	400	SY	$5.5	$2,200
Pavement, Cem Conc CL 6 (1-1/2), 12"	N/A	SY	N/A	N/A
Pavement, Cem Conc CL 6 (1-1/2), 8" w/ 2" Asphalt Wearing Course	400	SY	$36.5	$14,600
Right-of-Way/Land Acquisition	26,945	SF	$11.5	$458,065
Specialty Items - Description				
				$0
				$0
				$0
				$0
				$0

Drainage Basin: _____ **CSO Control Element:** 5,800 LF of 8' I.D. Deep Tunnel

Alternative Description: Deep Tunnel Alternative - Phase IV - Harbor Regulator to Duwamish PS

Revised: 1/5/95

Item Description		Quantity	Unit	Unit Cost	Total Cost
Tunnel Construction -	8 -Ft Diameter Tunnel	5,800	LF	$1,634.0	$9,477,200
Inlet Shaft Construction		1	EA	$793,820	$793,820
Outlet Shaft Construction		1	EA	$0	$0
Intermediate Shaft Construction		0	LS	$0	$0
Inlet Structure		1	LS	$300,000	$300,000
Street/Surface Restoration		244	SY	$56.5	$13,811
Traffic Control		5,800	LF	$20.0	$116,000
Utility Interference/Relocation		244	SY	$200.0	$48,889
Regulator/Drop Structure		2	EA	$500,000.0	$1,000,000.0
				SUBTOTAL:	**$11,749,720**
Mobilization/Demobilization (10%)		1	LS	$1,174,972	$1,174,972
Contractor's O & P (10%)		1	LS	$1,174,972	$1,174,972
	ESTIMATED CONSTRUCTION COST:				**$14,099,664**
	Contingency (On Estimated Construction Cost)			30%	$4,229,899
	Sales Tax (On Construction Cost and Contingency)			8.2%	$1,503,024
	TOTAL ESTIMATED CONSTRUCTION COST:				**$19,832,587**
	Design and Owner Management			35%	$6,941,406
Property Acquisition (Inc. 30% Contingency & 15% Management)		48,890	SF	$17	$831,130
	TOTAL PROJECT COST:				**$27,605,123**

CSO Control Alternative: Storage - Tunnel Storage
Data Input Form

Input Data in Shaded Cells

Input Parameters for Tunnel Boring				
Actual Tunnel Diameter (FT)	Bored Diameter (FT)	Length of Tunnel Boring (FT)		Tunnel Classification*
8	11	5,800		2

* 1=Shallow Tunnel, 2=Deep Tunnel

Note: Based on an analysis of the West Seattle Tunnel bid estimates and project estimates for the RTA tunnel project, the raw tunnel unit costs were decreased to $11.5 and $16.5 per in-dia/ft for shallow, simple tunnels and deep,complex tunnels respectively.

Input Parameters for Shaft Construction			
	Width (ft)	Length (ft)	Depth (ft)
Inlet Shaft	20	110	100
Outlet Shaft			
Intermediate Shaft			
Intermediate Shaft			
Intermediate Shaft			

CSO Control Alternative: Storage - Tunnel Storage
Unit Cost Input Form

Input Data in Shaded Cells

	Quantity	Unit	Unit Cost	Total Cost
Tunnel Construction				
Tunnel Boring Including Initial Liner and Final Liner	5800	LF	$1,584.0	$9,187,200
Disposal of Excess Excavation	4	CY/LF	$12.5	$290,000
Shaft Construction				
Inlet Shaft Excavation	8,148	CY	$14.0	$114,072
Inlet Shaft Sheeting and Shoring	26,000	SF	$11.0	$286,000
Inlet Shaft Tremie Slab	1,222	CY	$200.0	$244,400
Backfill Around Inlet Shaft - Native Material	6,518	CY	$9.0	$58,662
Disposal of Excess Inlet Shaft Excavation	1,630	CY	$12.5	$20,375
Dewatering Inlet Shaft (10% of inlet shaft construction)	1	LS	$70,313	$70,313
Outlet Shaft Excavation	0	CY	$14.0	$0
Outlet Shaft Sheeting and Shoring	0	SF	$11.0	$0
Outlet Shaft Tremie Slab	0	CY	$200.0	$0
Backfill Around Outlet Shaft - Native Material	0	CY	$9.0	$0
Disposal of Excess Outlet Shaft Excavation	0	CY	$12.5	$0
Dewatering Outlet Shaft (10% of outlet shaft construction)	1	LS	$0	$0
Intermediate Shaft Excavation	0	CY	$14.0	$0
Intermediate Shaft Sheeting and Shoring	0	SF	$11.0	$0
Intermediate Shaft Tremie Slabs	0	CY	$200.0	$0
Backfill Around Intermediate Shafts - Native Material	0	CY	$9.0	$0
Disposal of Excess Intermediate Shaft Excavation	0	CY	$12.5	$0
Dewatering Intermediate Shafts (10% of intermediate shaft constructior	1	LS	$0	$0
Street/Surface Restoration				
Removal and Disposal of Asphalt	244	SY	$14.5	$3,544
6" Thick Base Course - Mineral Aggregate Type 2	244	SY	$5.5	$1,344
Pavement, Cem Conc CL 6 (1-1/2), 12"	N/A	SY	N/A	N/A
Pavement, Cem Conc CL 6 (1-1/2), 8" w/ 2" Asphalt Wearing Course	244	SY	$36.5	$8,922
Right-of-Way/Land Acquisition	48,890	SF	$11.5	$831,130
Specialty Items - Description				
Regulator/Drop Structure	2	EA	$500,000.0	$1,000,000
				$0
				$0
				$0
				$0

Drainage Basin: _____ **CSO Control Element:** 1200 LF of 36" RCP (Brandon)

Revised: 1/5/95 **Alternative Description:** WW2020 - Deep Tunnel Alternative

Item Description	Quant.	Unit	Unit Cost	Total Cost
36 -Inch Diameter RCP	1,200	LF	$440.0	$528,000
-Inch Diameter RCP		LF		$0
-Inch Diameter RCP		LF		$0
-Inch Diameter RCP		LF		$0
Street Restoration	2,400	SY	$59.5	$142,800
			SUBTOTAL:	**$670,800**
Mobilization/Demobilization (10%)	1	LS	$67,080.0	$67,080
Contractor's O & P (10%)	1	LS	$67,080.0	$67,080
	ESTIMATED CONSTRUCTION COST:			**$804,960**
	Contingency (On Estimated Construction Cost)		30%	$241,488
	Sales Tax (On Construction Cost and Contingency)		8.2%	$85,809
	TOTAL ESTIMATED CONSTRUCTION COST:			**$1,132,257**
	Design and Owner Management		35%	$396,290
	TOTAL PROJECT COST:			**$1,528,547**

CSO Control Alternative: Conveyance - Construction of Combined Sewer
Data Input Form

Input Data in Shaded Cells

Linear Feet of New Combined Sewer

	Paved Street Surface				Unpaved Street Surface			
Average Invert Depth (FT)	Linear Feet of Pipe (FT)	I.D. of Pipe (IN)	Total Pipe Material & Install. Cost ($/LF)	Estimated Street Restoration Width (FT)	Linear Feet of Pipe (FT)	I.D. of Pipe (IN)	Total Pipe Material & Install. Cost ($/LF)	Traffic Control ($/LF)
		12	$123	12.0		12	$115	$5
		14	$124	12.0		15	$116	$5
		16	$127	12.0		18	$119	$5
		18	$130	12.0		21	$122	$5
		24	$140	12.0		24	$132	$10
		27	$151	12.0		27	$143	$10
		30	$161	12.0		30	$153	$10
35.0	1,200	36	$440	18.0		36	$432	$10
		42	$186	12.0		42	$178	$10
		48	$217	12.0		48	$209	$15
		54	$274	12.0		54	$266	$15
		60	$307	12.0		60	$299	$15
		72	$363	12.0		72	$355	$15
		84	$428	12.0		84	$420	$20
		96	$503	12.0		96	$495	$20
Totals	1200				0			

Excavation/Backfill Quantities Per Pipe Size

I.D. of Pipe (IN)	Average Invert Depth (FT)	Pipe Material Cost ($/LF)	Total Excavation per LF (CY/LF)	Bedding Volume Per LF (CY/LF)	Foundation Stabilization Material (CY/LF)	Backfill Initial Backfill Per LF (CY/LF)	Backfill Subsequent Backfill Per LF (CY/LF)	Disposal of Excess Excavation Per LF (CY/LF)	Filter Fabric Per LF (SY/LF)
12	0.0	$12.10	0.00	0.00	0.00	0.00	0.00	0.00	N/A
14	0.0	$13.40	0.00	0.00	0.00	0.00	0.00	0.00	N/A
16	0.0	$15.90	0.00	0.00	0.00	0.00	0.00	0.00	N/A
18	0.0	$19.10	0.00	0.00	0.00	0.00	0.00	0.00	N/A
24	0.0	$23.80	0.00	0.00	0.00	0.00	0.00	0.00	N/A
27	0.0	$31.50	0.00	0.00	0.00	0.00	0.00	0.00	N/A
30	0.0	$41.80	0.00	0.00	0.00	0.00	0.00	0.00	N/A
36	35.0	$49.80	8.13	0.28	0.28	0.28	6.89	7.04	N/A
42	0.0	$66.00	0.00	0.00	0.00	0.00	0.00	0.00	N/A
48	0.0	$80.80	0.00	0.00	0.00	0.00	0.00	0.00	N/A
54	0.0	$112.00	0.00	0.00	0.00	0.00	0.00	0.00	0.00
60	0.0	$145.00	0.00	0.00	0.00	0.00	0.00	0.00	0.00
72	0.0	$190.00	0.00	0.00	0.00	0.00	0.00	0.00	0.00
84	0.0	$250.00	0.00	0.00	0.00	0.00	0.00	0.00	0.00
96	0.0	$325.00	0.00	0.00	0.00	0.00	0.00	0.00	0.00

Land Use Classification Where Pipeline is Located: 2

1=Residential, 2=Commercial/Industrial, and 3=Highrise/Downtown

CSO Control Alternative: Conveyance - Construction of New Combined Sewer
Unit Cost Data Input Form

Input Data in Shaded Cells

	Quant.	Unit	Unit Cost	Total Cost
Pipe Material and Installation				
Pipe Material	N/A	N/A	Variable	N/A
Common Excavation	9,756	CY	$14.0	$136,584
Pipe Bedding - Mineral Aggregate, Type 9	332	CY	$30.0	$9,960
Pipe Bedding - Controlled Density Fill	0	CY	$74.0	$0
Backfill - Imported Material (Including Compaction)	665	CY	$29.0	$19,285
Backfill - Native Material (Including Compaction)	8,269	CY	$9.0	$74,421
Disposal of Excess Excavation	8,444	CY	$10.0	$84,440
Filter Fabric	0	SY	$3.5	$0
Saw-Cut Cement Concrete, 2" Min. Thickness	1,200	LF	$8.0	$9,600
Service Connections	1,200	LF	$24.0	$28,800
Utility Relocation	1,200	LF	$30	$36,000
Dewater - Trench	1,200	LF	$20.0	$24,000
Trench Support - Box	1,200	LF	$18.0	$21,600
Trench Support - Soldier Pile/Sheet	0	SF	$11.0	$0
Street/Surface Restoration				
Removal and Disposal of Asphalt	2,400	SY	$14.0	$33,600
6" Thick Base Course - Mineral Aggregate Type 2	2,400	SY	$5.5	$13,200
Pavement, Cem Conc CL 6 (1-1/2), 12"	2,400	SY	$40.0	$96,000
Pavement, Cem Conc CL 6 (1-1/2), 8" w/ 2" Asphalt Wearing Course	0	SY	$0.0	$0
Specialty Items - Description				
				$0
				$0
				$0
				$0

Drainage Basin: _____ **CSO Control Element:** 100 MGD Pump Station - Renton Site

Revised: 1/5/95 **Alternative Description:** WW2020 - Deep Tunnel Alternative

Item Description	Quant.	Unit	Unit Cost	Total Cost
Concrete	1432	CY	$430	$615,760
Temporary Sheeting and Shoring	19857	SF	$11.0	$218,427
Excavation	8211	CY	$14.0	$114,954
Backfill - Native	1188	CY	$9.0	$10,692
Backfill - Imported	4752	CY	$29.0	$137,808
Disposal of Excess Excavation	7023	CY	$10.0	$70,230
Street Restoration	568	SY	$56.5	$32,092
Utility Interference/Relocation	568	SY	$100	$56,800
Pumps, Associated Piping and Mechanical Equipment	1	LS	$1,930,224	$1,930,224
Miscellaneous Mechanical Equipment	1	LS	$579,067	$579,067
Misc. Electrical Equipment (15% of pump and mech. costs)	1	LS	$376,394	$376,394
			SUBTOTAL:	**$4,142,448**
Aeration (3%)	1	LS	$124,273	$124,273
Odor Control (5%)	1	LS	$207,122	$207,122
Traffic Control	1	LS	$50,000	$50,000
Dewatering (2.5%)	1	LS	$103,561	$103,561
Mobilization/Demobilization (10%)	1	LS	$462,741	$462,741
Contractor's O & P (10%)	1	LS	$462,741	$462,741
ESTIMATED CONSTRUCTION COST:				**$5,552,886**
Contingency (On Estimated Construction Cost)			30%	$1,665,866
Sales Tax (On Construction Cost and Contingency)			8.2%	$591,938
TOTAL ESTIMATED CONSTRUCTION COST:				**$7,810,690**
Design and Owner Management			35%	$2,733,741
TOTAL PROJECT COST:				**$10,544,431**

CSO Control Alternative: Conveyance - High Flow Pump Station (30<Q<250 MGD)
Data Input and Unit Price Input Form

Input Data in Shaded Cells

REQUIRED PUMP CAPACITY (MGD):	100
HIGH HEAD OR LOW HEAD PUMP*:	N/A

* All high flow pumps stations are assumed to be high head pump stations

Pump Costs* ($)	Concrete (CY)		
	Base Slab (CY)	Top Slab (CY)	Walls (CY)
$1,930,224	212	188	1032

* Pump cost includes pumps, motors, associated piping, valves, and fittings.

Excavation (SF)	Backfill (CY)	Backfill Native Mat'l (CY)	Backfill Imported Material (CY)	Haul Excess Material (CY)	Temporary Shoring (SF)	Surface Restoration (SY)
8211	5940	1188	4752	7023	19857	568

	Quant.	Unit	Unit Cost	Total Cost
Storage Tank Construction				
Concrete - Slab on Grade	212	CY	$300.0	$63,600
Concrete - Walls	1032	CY	$450.0	$464,400
Concrete - Elevated Slab	188	CY	$450.0	$84,600
Common Excavation	8,211	CY	$14.0	$114,954
Backfill - Imported Material (Including Compaction)	4,752	CY	$29.0	$137,808
Backfill - Native Material (Including Compaction)	1,188	CY	$9.0	$10,692
Disposal of Excess Excavation	7,023	CY	$10.0	$70,230
Trench Support - Soldier Pile/Sheet	19,857	SF	$11.0	$218,427
Street/Surface Restoration				
Removal and Disposal of Asphalt	568	SY	$14.5	$8,236
6" Thick Base Course - Mineral Aggregate Type 2	568	SY	$5.5	$3,124
Pavement, Cem Conc CL 6 (1-1/2), 12"	N/A	SY	N/A	N/A
Pavement, Cem Conc CL 6 (1-1/2), 8" w/ 2" Asphalt Wearing Course	568	SY	$36.5	$20,732
Pumps, Associated Piping and Mechanical Equipment				
Pumps and Associated Piping	1	LS	$1,930,224	$1,930,224
Misc. Gates, Valves and Mech. Equip. (30% of Pumps and Piping Costs)	1	LS	579,067	$579,067
Electrical Systems Pertaining to Pump Systems	1	LS	$376,394	$376,394
Specialty Items - Description				
				$0
				$0

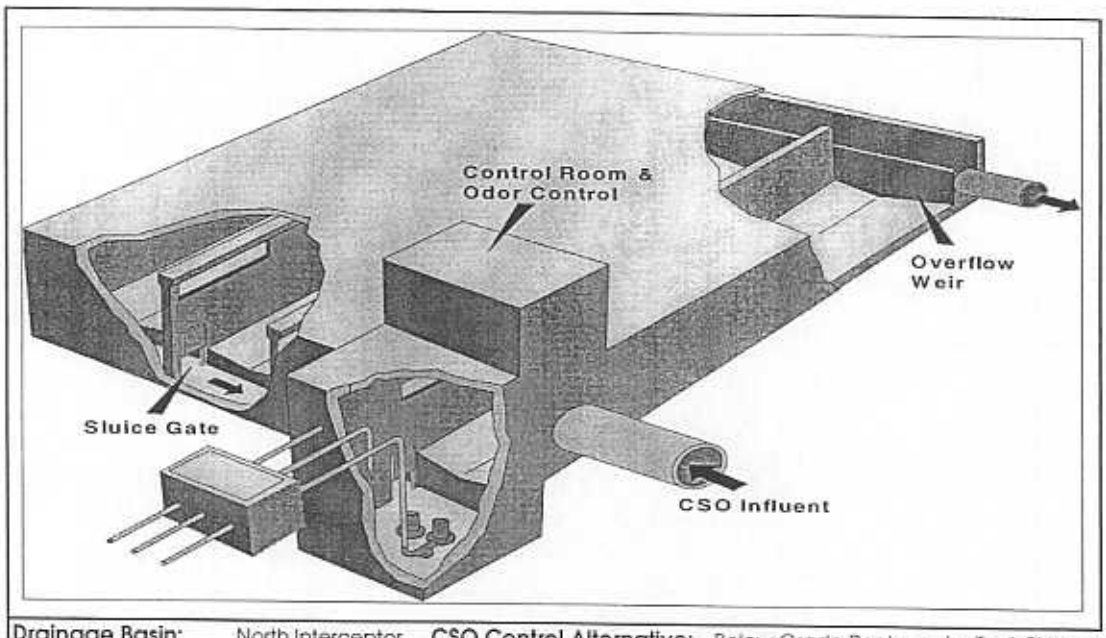

Drainage Basin: North Interceptor **CSO Control Alternative:** Below Grade Rectangular Tank Storage

Location: 3rd West--w/o New Lake Line

ENR 5630 for estimate **Sizing:** 5.5 MG

Item Description	Quantity	Unit	Unit Cost	Total Cost
Concrete	12,310	CY	$375.4	$4,621,500
Temporary Sheeting and Shoring	39,000	SF	$11.0	$429,000
Excavation	60,440	CY	$14.0	$846,160
Backfill-Native	3,738	CY	$9.0	$33,642
Backfill - Imported	14,952	CY	$29.0	$433,608
Disposal of Excess Excavation	56,702	CY	$10.0	$567,020
Piling	0	LF	$16.5	$0
Sluice Gates	7	EA	$50,000.0	$350,000
Drainage Pumps and Assoc. Mech./Elect. Equip.	1	LS		$147,396
Street Restoration	0	SY	$96.5	$0
Utility Interference/Relocation	6,800	SY	$100.0	$680,000
Specialty Items				$0
			Subtotal	**$8,108,326**
Miscellaneous Mechanical/Washdown System	1	LS	5.0%	$405,416
Aeration	1	LS	3.0%	$243,250
Landscaping	1	LS	10.0%	$810,833
Odor Control	1	LS	5.0%	$405,416
Traffic Control	1	LS	$50,000	$50,000
Dewatering	1	LS	2.5%	$202,708
Mobilization/Demobilization	1	LS	10.0%	$1,022,595
Contractor's O & P	1	LS	10.0%	$1,022,595
			Subtotal	**$12,271,140**
Contingency			30%	$3,681,342
Sales Tax			8.2%	$1,308,103
	ESTIMATED CONSTRUCTION COST			**$17,260,585**
Design and Owner Management			35%	$6,041,205
Property Acquisition	67000	SF	$17	$1,139,000
Flow Regulator Structure--Project Cost	1	LS		$732,718
	TOTAL PROJECT COST			**$25,180,000**

CSO Control Alternative: Storage - Below Grade Rectangular Tank Storage
Data Input Form and Unit Cost Data Input Form

Input Data In Shaded Cells

Assumptions

Cover Depth, ft	1.5		Over Excavation	
Side Water Depth, ft	15		Bottom	5 ft
Top Slab, ft	1.5		Sides	5 ft
Bottom Slab, ft	3		Wall Thickness	
Freeboard, ft	1		Exterior	2 ft
Length/Width Ratio	3		Interior	1.25 ft
Target Stage Width, ft	20		Tank Width	139 ft
Actual Stage Width, ft	18.2		Tank Length	395 ft
			Excavation Depth	27 ft

Calculated Quantities

Req'd Storage Volume (MG)	Concrete: Base Slab (CY)	Concrete: Walls (CY)	Concrete: Top Slab (CY)	Req'd N Piles (No.)	Sluice Gates (ea)	Hours Req'd to Drain Tank
5.5	6,120	3,130	3,060	0	7	48

Req'd Storage Volume (MG)	Excavation (CY)	Backfill (CY)	Backfill Native Mat'l (CY)	Backfill Imported Material (CY)	Haul Excess Material (CY)	Temporary Shoring (SF)	N Street Restoration (SY)
5.5	60,440	18,690	3,738	14,952	56,702	39,000	0

LAND USE CLASSIFICATION WHERE STORAGE IS LOCATED* 1

* 1=Residential, 2=Commercial/Industrial, and 3=Highrise/Downtown Business District

Estimated Costs

ENR Basis 5630

	Quantity	Unit	Unit Cost	Total Cost
Storage Tank Construction				
Concrete - Slab on Grade	6120	CY	$300.0	$1,836,000
Concrete - Walls	3130	CY	$450.0	$1,408,500
Concrete - Elevated Slab	3060	CY	$450.0	$1,377,000
Common Excavation	60,440	CY	$14.0	$846,160
Backfill - Imported Material (Including Compaction)	14,952	CY	$29.0	$433,608
Backfill - Native Material (Including Compaction)	3,738	CY	$9.0	$33,642
Disposal of Excess Excavation	56,702	CY	$10.0	$567,020
Trench Support - Soldier Pile/Sheet	39,000	SF	$11.0	$429,000
Street/Surface Restoration				
Removal and Disposal of Asphalt	0	SY	$14.5	$0
6" Thick Base Course - Mineral Aggregate Type 2	0	SY	$5.5	$0
Pavement, Cem Conc CL 6 (1-1/2), 12"	0	SY	$40.0	$0
Pavement, Cem Conc CL 6 (1-1/2), 8" w/ 2" Asphalt Wearing Course	0	SY	$36.5	$0
Pumps, Associated Piping and Mechical/Electrical Equipment				
Pumps and Associated Piping	2.74	MGD		$98,593
Misc. Mechanical Equipment	1	LS	30.0%	$29,578
Electrical Systems	1	LS	15.0%	$19,226
Specialty Items - Description				
				$0
				$0

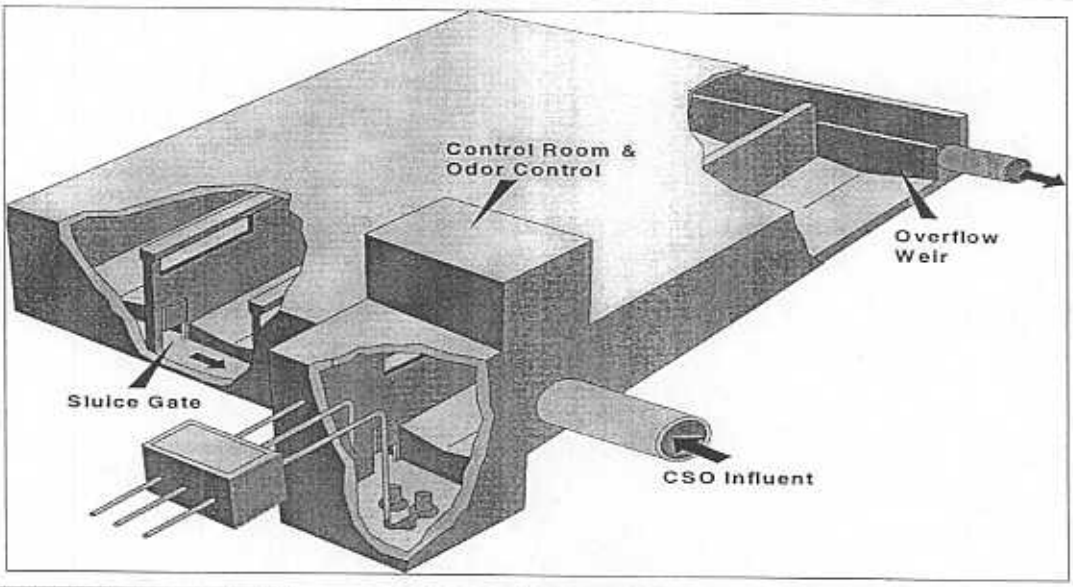

Drainage Basin: North Interceptor **CSO Control Alternative:** Storage w/ Denny project

Location: 3rd W. w/ no new Lake Line

ENR 5630 for estimate **Sizing:** 3.1 MG

Denny Project in place as developed in 1997 Facilities Plan--no extra diversion from Central Trunk

Item Description	Quantity	Unit	Unit Cost	Total Cost
Concrete	7,200	CY	$376.9	$2,713,500
Temporary Sheeting and Shoring	29,900	SF	$11.0	$328,900
Excavation	35,660	CY	$14.0	$499,240
Backfill-Native	2,350	CY	$9.0	$21,150
Backfill - Imported	9,400	CY	$29.0	$272,600
Disposal of Excess Excavation	33,310	CY	$10.0	$333,100
Piling	0	LF	$16.5	$0
Sluice Gates	5	EA	$50,000.0	$250,000
Drainage Pumps and Assoc. Mech./Elect. Equip.	1	LS		$105,308
Street Restoration	0	SY	$96.5	$0
Utility Interference/Relocation	4,000	SY	$100.0	$400,000
Specialty Items				$0
			Subtotal	**$4,923,798**
Miscellaneous Mechanical/Washdown System	1	LS	5.0%	$246,190
Aeration	1	LS	3.0%	$147,714
Landscaping	1	LS	10.0%	$492,380
Odor Control	1	LS	10.0%	$492,380
Traffic Control	1	LS	$50,000	$50,000
Dewatering	1	LS	2.5%	$123,095
Mobilization/Demobilization	1	LS	10.0%	$647,556
Contractor's O & P	1	LS	10.0%	$647,556
			Subtotal	**$7,770,668**
Contingency			30%	$2,331,200
Sales Tax			8.2%	$828,353
	ESTIMATED CONSTRUCTION COST			**$10,930,222**
Design and Owner Management			35%	$3,825,578
Property Acquisition	40000	SF	$17	$680,000
Flow Control Structure--Project Cost	1	LS		$732,718
	TOTAL PROJECT COST			**$16,170,000**

CSO Control Alternative: Storage - Below Grade Rectangular Tank Storage
Data Input Form and Unit Cost Data Input Form

Input Data in Shaded Cells

Assumptions

Cover Depth, ft	1.5	Over Excavation		
Side Water Depth, ft	15	Bottom	5	ft
Top Slab, ft	1.5	Sides	5	ft
Bottom Slab, ft	3	Wall Thickness		
Freeboard, ft	1	Exterior	2	ft
Length/Width Ratio	3	Interior	1.25	ft
Target Stage Width, ft	20	Tank Width	105	ft
Actual Stage Width, ft	19.2	Tank Length	300	ft
		Excavation Depth	27	ft

Calculated Quantities

Req'd Storage Volume (MG)	Concrete Base Slab (CY)	Concrete Walls (CY)	Concrete Top Slab (CY)	Req'd N Piles (No.)	Sluice Gates (ea)	Hours Req'd to Drain Tank
3.1	3,510	1,930	1,760	0	5	48

Req'd Storage Volume (MG)	Excavation (CY)	Backfill (CY)	Backfill Native Mat'l (CY)	Backfill Imported Material (CY)	Haul Excess Material (CY)	Temporary Shoring (SF)	N Street Restoration (SY)
3.1	35,660	11,750	2,350	9,400	33,310	29,900	0

LAND USE CLASSIFICATION WHERE STORAGE IS LOCATED*	1

* 1=Residential, 2=Commercial/Industrial, and 3=Highrise/Downtown Business District

Estimated Costs

ENR Basis 5630	Quantity	Unit	Unit Cost	Total Cost
Storage Tank Construction				
Concrete - Slab on Grade	3510	CY	$300.0	$1,053,000
Concrete - Walls	1930	CY	$450.0	$868,500
Concrete - Elevated Slab	1760	CY	$450.0	$792,000
Common Excavation	35,660	CY	$14.0	$499,240
Backfill - Imported Material (Including Compaction)	9,400	CY	$29.0	$272,600
Backfill - Native Material (Including Compaction)	2,350	CY	$9.0	$21,150
Disposal of Excess Excavation	33,310	CY	$10.0	$333,100
Trench Support - Soldier Pile/Sheet	29,900	SF	$11.0	$328,900
Street/Surface Restoration				
Removal and Disposal of Asphalt	0	SY	$14.5	$0
6" Thick Base Course - Mineral Aggregate Type 2	0	SY	$5.5	$0
Pavement, Cem Conc Cl. 6 (1-1/2), 12"	0	SY	$40.0	$0
Pavement, Cem Conc Cl. 6 (1-1/2), 8" w/ 2" Asphalt Wearing Course	0	SY	$36.5	$0
Pumps, Associated Piping and Mechical/Electrical Equipment				
Pumps and Associated Piping	1.55	MGD		$70,440
Misc. Mechanical Equipment	1	LS	30.0%	$21,132
Electrical Systems	1	LS	15.0%	$13,736
Specialty Items - Description				
Regulator Station	0	LS	$310,000	$0
Connecting Conduit 72-inch	0	FT	$1,415.0	$0
				$0

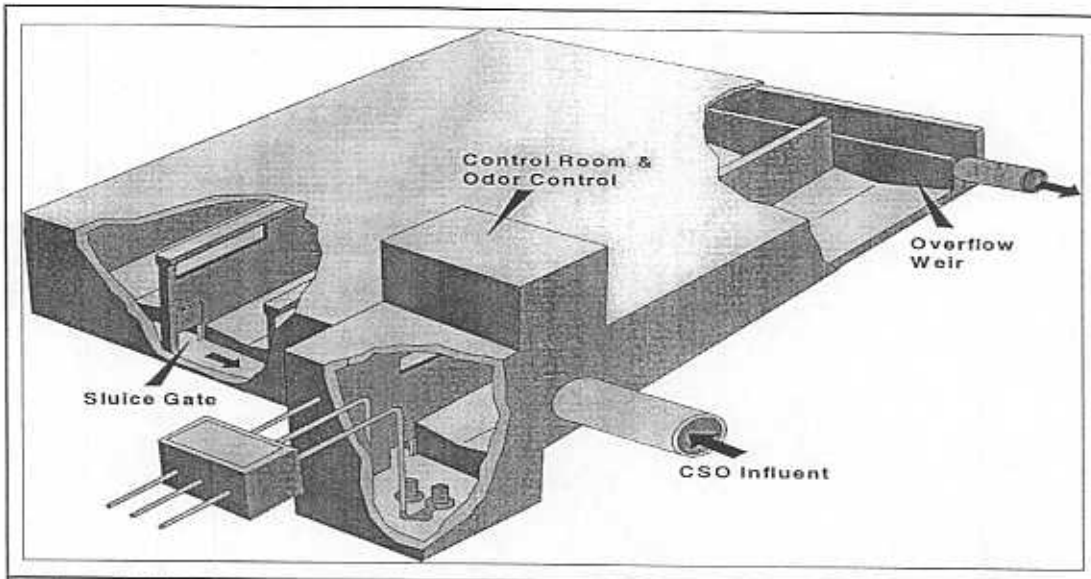

Drainage Basin: North Interceptor **CSO Control Alternative:** Storage w/ Denny project

Location: 3rd W. w/ no new Lake Line

ENR 5630 for estimate **Sizing:** 1.0 MG

Storage with additional diversion from Dexter to Denny Project

Item Description	Quantity	Unit	Unit Cost	Total Cost
Concrete	2,670	CY	$382.6	$1,021,500
Temporary Sheeting and Shoring	18,100	SF	$11.0	$199,100
Excavation	13,190	CY	$14.0	$184,660
Backfill-Native	1,010	CY	$9.0	$9,090
Backfill - Imported	4,040	CY	$29.0	$117,160
Disposal of Excess Excavation	12,180	CY	$10.0	$121,800
Piling	0	LF	$16.5	$0
Sluice Gates	3	EA	$50,000.0	$150,000
Drainage Pumps and Assoc. Mech./Elect. Equip.	1	LS		$68,250
Street Restoration	0	SY	$96.5	$0
Utility Interference/Relocation	1,500	SY	$100.0	$150,000
Specialty Items				$0
			Subtotal	**$2,021,560**
Miscellaneous Mechanical/Washdown System	1	LS	5.0%	$101,078
Aeration	1	LS	3.0%	$60,647
Landscaping	1	LS	10.0%	$202,156
Odor Control	1	LS	10.0%	$202,156
Traffic Control	1	LS	$50,000	$50,000
Dewatering	1	LS	2.5%	$50,539
Mobilization/Demobilization	1	LS	10.0%	$268,814
Contractor's O & P	1	LS	10.0%	$268,814
			Subtotal	**$3,225,763**
Contingency			30%	$967,729
Sales Tax			8.2%	$343,866
	ESTIMATED CONSTRUCTION COST			**$4,537,358**
Design and Owner Management			35%	$1,588,075
Property Acquisition	15000	SF	$17	$255,000
Modify 3rd W and Dexter Regulators	1	LS		$1,465,436
Add 30 mgd pumping capacity at Elliott West	1	LS		$1,891,996
	TOTAL PROJECT COST			**$9,740,000**

CSO Control Alternative: Storage - Below Grade Rectangular Tank Storage
Data Input Form and Unit Cost Data Input Form

Input Data In Shaded Cells

Assumptions

Cover Depth, ft	1.5	Over Excavation		
Side Water Depth, ft	15	Bottom	5	ft
Top Slab, ft	1.5	Sides	5	ft
Bottom Slab, ft	3	Wall Thickness		
Freeboard, ft	1	Exterior	2	ft
Length/Width Ratio	3	Interior	1.25	ft
Target Stage Width, ft	20	Tank Width	61	ft
Actual Stage Width, ft	18.2	Tank Length	176	ft
		Excavation Depth	27	ft

Calculated Quantities

Req'd Storage Volume (MG)	Concrete Base Slab (CY)	Concrete Walls (CY)	Concrete Top Slab (CY)	Req'd N Piles (No.)	Sluice Gates (ea)	Hours Req'd to Drain Tank
1.0	1,200	870	600	0	3	48

Req'd Storage Volume (MG)	Excavation (CY)	Backfill (CY)	Backfill Native Mat'l (CY)	Backfill Imported Material (CY)	Haul Excess Material (CY)	Temporary Shoring (SF)	N Street Restoration (SY)
1.0	13,190	5,050	1,010	4,040	12,180	18,100	0

LAND USE CLASSIFICATION WHERE STORAGE IS LOCATED*	1

* 1=Residential, 2=Commercial/Industrial, and 3=Highrise/Downtown Business District

Estimated Costs

ENR Basis 5630	Quantity	Unit	Unit Cost	Total Cost
Storage Tank Construction				
Concrete - Slab on Grade	1200	CY	$300.0	$360,000
Concrete - Walls	870	CY	$450.0	$391,500
Concrete - Elevated Slab	600	CY	$450.0	$270,000
Common Excavation	13,190	CY	$14.0	$184,660
Backfill - Imported Material (Including Compaction)	4,040	CY	$29.0	$117,160
Backfill - Native Material (Including Compaction)	1,010	CY	$9.0	$9,090
Disposal of Excess Excavation	12,180	CY	$10.0	$121,800
Trench Support - Soldier Pile/Sheet	18,100	SF	$11.0	$199,100
Street/Surface Restoration				
Removal and Disposal of Asphalt	0	SY	$14.5	$0
6" Thick Base Course - Mineral Aggregate Type 2	0	SY	$5.5	$0
Pavement, Cem Conc CL 6 (1-1/2), 12"	0	SY	$40.0	$0
Pavement, Cem Conc CL 6 (1-1/2), 8" w/ 2" Asphalt Wearing Course	0	SY	$36.5	$0
Pumps, Associated Piping and Mechical/Electrical Equipment				
Pumps and Associated Piping	0.50	MGD		$45,652
Misc. Mechanical Equipment	1	LS	30.0%	$13,696
Electrical Systems	1	LS	15.0%	$8,902
Specialty Items - Description				
Regulator Station	0	LS	$310,000	$0
Connecting Conduit 72-inch	0	FT	$1,415.0	$0
Increase Elliott West Pumping Capacity	0	MGD		$0

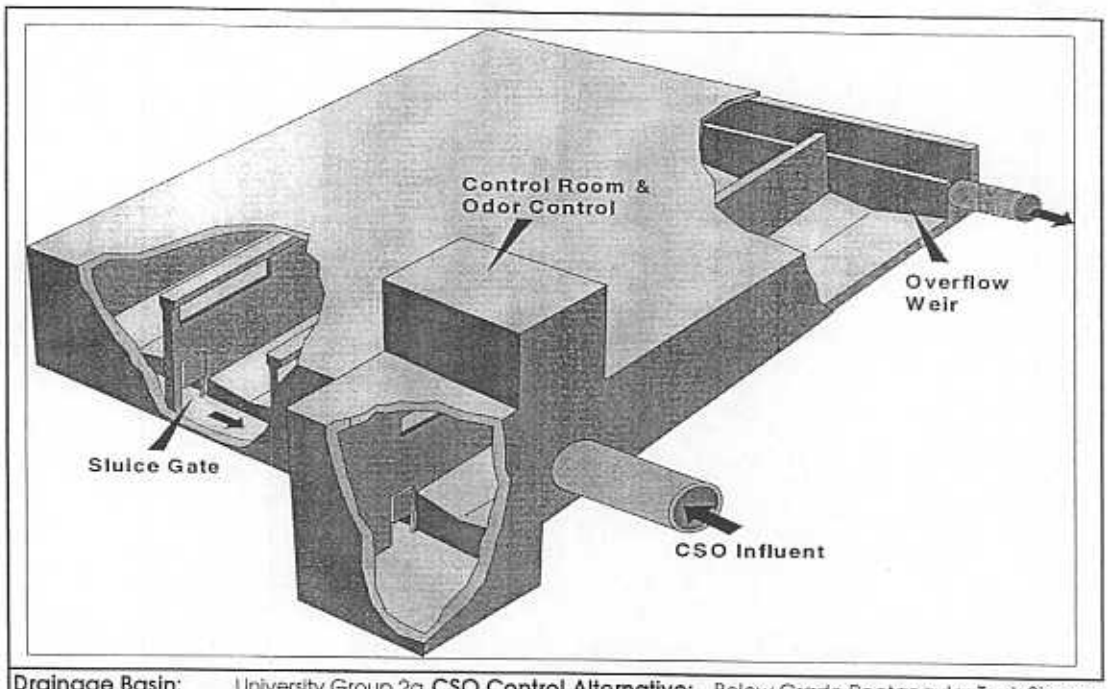

Drainage Basin: University Group 2a **CSO Control Alternative:** Below Grade Rectangular Tank Storage

Location: Husky Stadium no new Lake Line

ENR 5630 for estimate **Sizing:** 7.5 MG

Item Description	Quantity	Unit	Unit Cost	Total Cost
Concrete	14,300	CY	$378.7	$5,415,000
Temporary Sheeting and Shoring	59,800	SF	$11.0	$657,800
Excavation	97,420	CY	$14.0	$1,363,880
Backfill-Native	8,466	CY	$9.0	$76,194
Backfill - Imported	33,864	CY	$29.0	$982,056
Disposal of Excess Excavation	88,954	CY	$10.0	$889,540
Piling	0	LF	$16.5	$0
Sluice Gates	7	EA	$50,000.0	$350,000
Drainage Pumps and Assoc. Mech./Elect. Equip.	1	LS		$182,955
Street Restoration	0	SY	$96.5	$0
Utility Interference/Relocation	7,500	SY	$25.0	$187,500
Specialty Items				$1,386,400
			Subtotal	**$11,491,325**
Miscellaneous Mechanical/Washdown System	1	LS	5.0%	$574,566
Aeration	1	LS	3.0%	$344,740
Landscaping	1	LS	10.0%	$1,149,133
Odor Control	1	LS	10.0%	$1,149,133
Traffic Control	1	LS	$50,000	$50,000
Dewatering	1	LS	2.5%	$287,283
Mobilization/Demobilization	1	LS	10.0%	$1,504,618
Contractor's O & P	1	LS	12.0%	$1,805,542
			Subtotal	**$18,356,339**
Contingency			30%	$5,506,902
Sales Tax			8.2%	$1,956,786
	ESTIMATED CONSTRUCTION COST			**$25,820,026**
Design and Owner Management			35%	$9,037,009
Property Acquisition	74000	SF	$17	$1,258,000
Conveyance 1200-ft 96-inch pipeline	1	LS		$11,442,798
	TOTAL PROJECT COST			**$47,560,000**

CSO Control Alternative: Storage - Below Grade Rectangular Tank Storage
Data Input Form and Unit Cost Data Input Form

Input Data in Shaded Cells

Assumptions

Cover Depth, ft	10		Over Excavation	
Side Water Depth, ft	18		Bottom	5 ft
Top Slab, ft	1.5		Sides	5 ft
Bottom Slab, ft	3		Wall Thickness	
Freeboard, ft	1.5		Exterior	2 ft
Length/Width Ratio	3		Interior	1.25 ft
Target Stage Width, ft	20		Tank Width	146 ft
Actual Stage Width, ft	19.3		Tank Length	417 ft
			Excavation Depth	39.34 ft

Calculated Quantities

Req'd Storage Volume (MG)	Concrete: Base Slab (CY)	Concrete: Walls (CY)	Concrete: Top Slab (CY)	Req'd N Piles (No.)	Sluice Gates (ea)	Hours Req'd to Drain Tank
7.5	6,800	4,100	3,400	0	7	48

Req'd Storage Volume (MG)	Excavation (CY)	Backfill (CY)	Backfill Native Mat'l (CY)	Backfill Imported Material (CY)	Haul Excess Material (CY)	Temporary Shoring (SF)	N Street Restoration (SY)
7.5	97,420	42,330	8,466	33,864	88,954	59,800	0

LAND USE CLASSIFICATION WHERE STORAGE IS LOCATED* 1

* 1=Residential, 2=Commercial/Industrial, and 3=Highrise/Downtown Business District

Estimated Costs

ENR Basis 5630

	Quantity	Unit	Unit Cost	Total Cost
Storage Tank Construction				
Concrete - Slab on Grade	6800	CY	$300.0	$2,040,000
Concrete - Walls	4100	CY	$450.0	$1,845,000
Concrete - Elevated Slab	3400	CY	$450.0	$1,530,000
Common Excavation	97,420	CY	$14.0	$1,363,880
Backfill - Imported Material (Including Compaction)	33,864	CY	$29.0	$982,056
Backfill - Native Material (Including Compaction)	8,466	CY	$9.0	$76,194
Disposal of Excess Excavation	88,954	CY	$10.0	$889,540
Trench Support - Soldier Pile/Sheet	59,800	SF	$11.0	$657,800
Street/Surface Restoration				
Removal and Disposal of Asphalt	0	SY	$14.5	$0
6" Thick Base Course - Mineral Aggregate Type 2	0	SY	$5.5	$0
Pavement, Cem Conc CL 6 (1-1/2), 12"	0	SY	$40.0	$0
Pavement, Cem Conc CL 6 (1-1/2), 8" w/ 2" Asphalt Wearing Course	0	SY	$36.5	$0
Pumps, Associated Piping and Mechical/Electrical Equipment				
Pumps and Associated Piping	3.75	MGD		$122,378
Misc. Mechanical Equipment	1	LS	30.0%	$36,713
Electrical Systems	1	LS	15.0%	$23,864
Specialty Items - Description				
Micro tunnel--48-inch from Montlake	1600	FT	$779.0	$1,246,400
Drop Shaft @ Montlake (2 ea)	2	LS	$70,000.0	$140,000

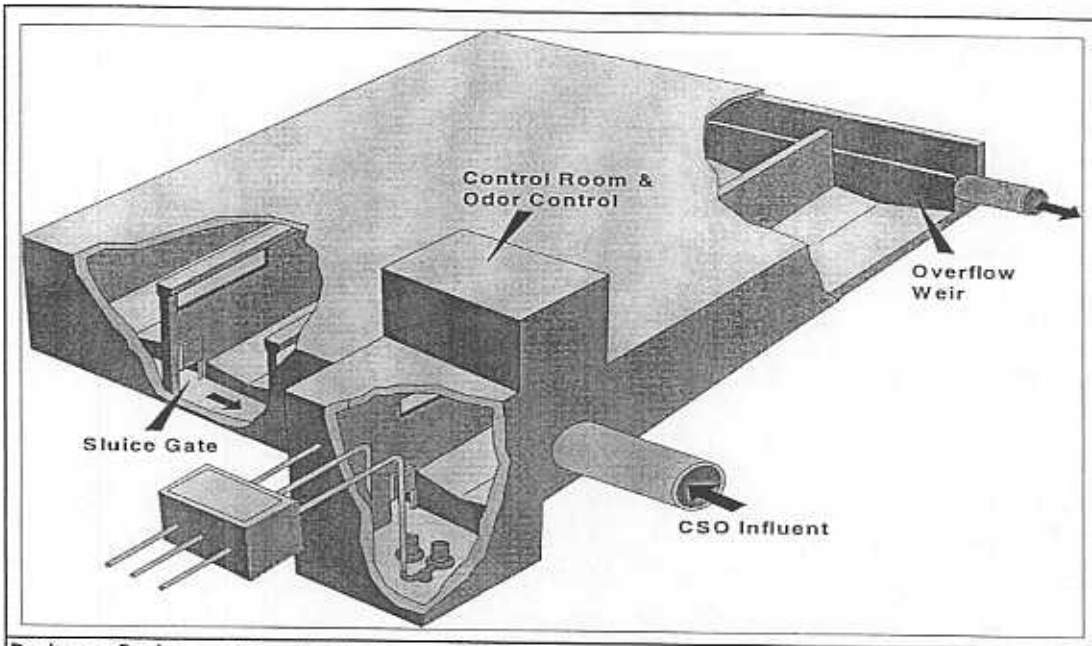

Drainage Basin: University Site 3 **CSO Control Alternative:** Below Grade Rectangular Tank Storage

Location: University+Montlake w/ New Lake Line

ENR 5630 for estimate **Sizing:** 12.0 MG

System includes a parking Garage on top

Item Description		Quantity	Unit	Unit Cost	Total Cost
Concrete		22,520	CY	$376.9	$8,488,500
Temporary Sheeting and Shoring		74,600	SF	$11.0	$820,600
Excavation		152,970	CY	$14.0	$2,141,580
Backfill-Native		13,058	CY	$9.0	$117,522
Backfill - Imported		52,232	CY	$29.0	$1,514,728
Disposal of Excess Excavation		139,912	CY	$10.0	$1,399,120
Piling		0	LF	$16.5	$0
Sluice Gates		9	EA	$50,000.0	$450,000
Drainage Pumps and Assoc. Mech./Elect. Equip.		1	LS		$262,367
Street Restoration		11,800	SY	$96.5	$1,138,700
Utility Interference/Relocation		11,800	SY	$25.0	$295,000
Specialty Items					$1,386,400
				Subtotal	**$18,014,517**
Miscellaneous Mechanical/Washdown System		1	LS	5.0%	$900,726
Aeration		1	LS	3.0%	$540,435
Landscaping		1	LS	10.0%	$1,801,452
Odor Control		1	LS	10.0%	$1,801,452
Traffic Control		1	LS	$50,000	$50,000
Dewatering		1	LS	2.5%	$450,363
Mobilization/Demobilization	Assume 2 seasons	2	LS	10.0%	$4,711,789
Contractor's O & P		1	LS	12.0%	$2,827,073
				Subtotal	**$31,097,806**
Contingency				30%	$9,329,342
Sales Tax				8.2%	$3,315,026
	ESTIMATED CONSTRUCTION COST				**$43,742,174**
Design and Owner Management				35%	$15,309,761
Property Acquisition		117000	SF	$10	$1,170,000
Conveyance	130 mgd influent pump station and 1200 ft 72-inch forcemain	1	LS		$7,379,475
	TOTAL PROJECT COST				**$67,610,000**

CSO Control Alternative: Storage - Below Grade Rectangular Tank Storage
Data Input Form and Unit Cost Data Input Form

Input Data In Shaded Cells

Assumptions

Cover Depth, ft	10
Side Water Depth, ft	18
Top Slab, ft	1.5
Bottom Slab, ft	3
Freeboard, ft	1.5
Length/Width Ratio	3
Target Stage Width, ft	20
Actual Stage Width, ft	19.2

Over Excavation		
Bottom	5	ft
Sides	5	ft
Wall Thickness		
Exterior	2	ft
Interior	1.25	ft
Tank Width	186	ft
Tank Length	529	ft
Excavation Depth	39	ft

Calculated Quantities

Req'd Storage Volume (MG)	Concrete: Base Slab (CY)	Concrete: Walls (CY)	Concrete: Top Slab (CY)	Req'd N Piles (No.)	Sluice Gates (ea)	Hours Req'd to Drain Tank
12.0	10,970	6,060	5,490	0	9	48

Req'd Storage Volume (MG)	Excavation (CY)	Backfill (CY)	Backfill Native Mat'l (CY)	Backfill Imported Material (CY)	Haul Excess Material (CY)	Temporary Shoring (SF)	Y Street Restoration (SY)
12.0	152,970	65,290	13,058	52,232	139,912	74,600	11,800

LAND USE CLASSIFICATION WHERE STORAGE IS LOCATED* 1

* 1=Residential, 2=Commercial/Industrial, and 3=Highrise/Downtown Business District

Estimated Costs

ENR Basis 5630

	Quantity	Unit	Unit Cost	Total Cost
Storage Tank Construction				
Concrete - Slab on Grade	10970	CY	$300.0	$3,291,000
Concrete - Walls	6060	CY	$450.0	$2,727,000
Concrete - Elevated Slab	5490	CY	$450.0	$2,470,500
Common Excavation	152,970	CY	$14.0	$2,141,580
Backfill - Imported Material (Including Compaction)	52,232	CY	$29.0	$1,514,728
Backfill - Native Material (Including Compaction)	13,058	CY	$9.0	$117,522
Disposal of Excess Excavation	139,912	CY	$10.0	$1,399,120
Trench Support - Soldier Pile/Sheet	74,600	SF	$11.0	$820,600
Street/Surface Restoration				
Removal and Disposal of Asphalt	11,800	SY	$14.5	$171,100
6" Thick Base Course - Mineral Aggregate Type 2	11,800	SY	$5.5	$64,900
Pavement, Cem Conc CL 6 (1-1/2), 12"	0	SY	$40.0	$0
Pavement, Cem Conc CL 6 (1-1/2), 8" w/ 2" Asphalt Wearing Course	11,800	SY	$36.5	$430,700
Pumps, Associated Piping and Mechical/Electrical Equipment				
Pumps and Associated Piping	6.00	MGD		$175,496
Misc. Mechanical Equipment	1	LS	30.0%	$52,649
Electrical Systems	1	LS	15.0%	$34,222
Specialty Items - Description				
Micro tunnel--48-inch from Montlake	1600	FT	$779.0	$1,246,400
Drop Shaft @ Montlake (2 ea)	2	LS	$70,000.0	$140,000

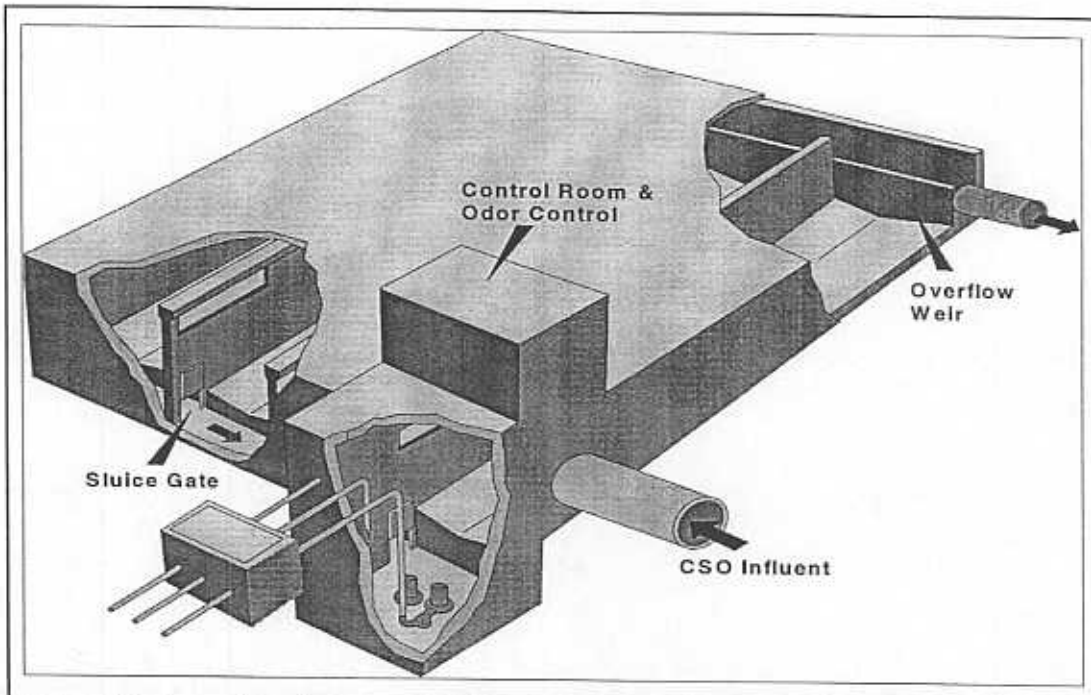

Drainage Basin: University Site 1 **CSO Control Alternative:** Above Grade Rectangular Tank Storage

Location: University Montlake Parking Lot

ENR 5630 for estimate **Sizing:** 12.0 MG

Item Description	Quantity	Unit	Unit Cost	Total Cost
Concrete	47,930	CY	$388.8	$18,637,500
Temporary Sheeting and Shoring	0	SF	$11.0	$0
Excavation	0	CY	$19.0	$0
Backfill-Native	0	CY	$9.0	$0
Backfill - Imported	0	CY	$29.0	$0
Disposal of Excess Excavation	0	CY	$10.0	$0
Piling	287,200	LF	$16.5	$4,738,800
Sluice Gates	12	EA	$50,000.0	$600,000
Drainage Pumps and Assoc. Mech./Elect. Equip.	1	LS		$262,367
Street Restoration	19,600	SY	$60.0	$1,176,000
Utility Interference/Relocation	19,600	SY	$50.0	$980,000
Specialty Items				$7,131,000
			Subtotal	**$33,525,667**
Miscellaneous Mechanical/Washdown System	1	LS	5.0%	$1,676,283
Aeration	1	LS	3.0%	$1,005,770
Landscaping	1	LS	10.0%	$3,352,567
Odor Control	1	LS	10.0%	$3,352,567
Traffic Control	1	LS	$50,000	$50,000
Dewatering	1	LS	2.5%	$838,142
Mobilization/Demobilization	1	LS	10.0%	$4,380,099
Contractor's O & P	1	LS	10.0%	$4,380,099
			Subtotal	**$52,561,194**
Contingency			30%	$15,768,358
Sales Tax			8.2%	$5,603,023
	ESTIMATED CONSTRUCTION COST			**$73,932,575**
Design and Owner Management			35%	$25,876,401
Property Acquisition	194000	SF	$17	$3,298,000
	TOTAL PROJECT COST			**$103,110,000**

CSO Control Alternative: Storage - Below Grade Rectangular Tank Storage
Data Input Form and Unit Cost Data Input Form

Input Data In Shaded Cells

Assumptions

Cover Depth, ft	-17.5	Over Excavation		
Side Water Depth, ft	10	Bottom	0	ft
Top Slab, ft	3	Sides	0	ft
Bottom Slab, ft	3	Wall Thickness		
Freeboard, ft	1.5	Exterior	2	ft
Length/Width Ratio	3	Interior	1.25	ft
Target Stage Width, ft	20	Tank Width	249	ft
Actual Stage Width, ft	19.3	Tank Length	706	ft
		Excavation Depth	0	ft

Calculated Quantities

Req'd Storage Volume (MG)	Concrete Base Slab (CY)	Concrete Walls (CY)	Concrete Top Slab (CY)	Req'd Y Piles (No.)	Sluice Gates (ea)	Hours Req'd to Drain Tank
12.0	19,540	5,900	19,540	3,590	12	48

Req'd Storage Volume (MG)	Excavation (CY)	Backfill (CY)	Backfill Native Matl (CY)	Backfill Imported Material (CY)	Haul Excess Material (CY)	Temporary Shoring (SF)	Y Street Restoration (SY)
12.0	0	0	0	0	0	0	19,600

LAND USE CLASSIFICATION WHERE STORAGE IS LOCATED* 2

* 1=Residential, 2=Commercial/Industrial, and 3=Highrise/Downtown Business District

Estimated Costs

ENR Basis 5630

	Quantity	Unit	Unit Cost	Total Cost
Storage Tank Construction				
Concrete - Slab on Grade	19540	CY	$300.0	$5,862,000
Concrete - Walls	8850	CY	$450.0	$3,982,500
Concrete - Elevated Slab	19540	CY	$450.0	$8,793,000
Common Excavation	0	CY	$19.0	$0
Backfill - Imported Material (Including Compaction)	0	CY	$29.0	$0
Backfill - Native Material (Including Compaction)	0	CY	$9.0	$0
Disposal of Excess Excavation	0	CY	$10.0	$0
Trench Support - Soldier Pile/Sheet	0	SF	$11.0	$0
Street/Surface Restoration				
Removal and Disposal of Asphalt	19,600	SY	$14.5	$284,200
6" Thick Base Course - Mineral Aggregate Type 2	19,600	SY	$5.5	$107,800
Pavement, Cem Conc CL 6 (1-1/2), 12"	19,600	SY	$40.0	$784,000
Pavement, Cem Conc CL 6 (1-1/2), 8" w/ 2" Asphalt Wearing Course	0	SY	$0.0	$0
Pumps, Associated Piping and Mechical/Electrical Equipment				
Pumps and Associated Piping	6.00	MGD		$175,496
Misc. Mechanical Equipment	1	LS	30.0%	$52,649
Electrical Systems	1	LS	15.0%	$34,222
Specialty Items - Description				
Regulator Station	1	LS	$310,000	$310,000
Connecting Conduit 72-inch	500	FT	$1,415.0	$707,500
Influent Pumping Station	130	mgd		$4,727,100
Micro tunnel--48-inch from Montlake	1600	FT	$779.0	$1,246,400
Drop Shaft @ Montlake (2 ea)	2	LS	$70,000.0	$140,000

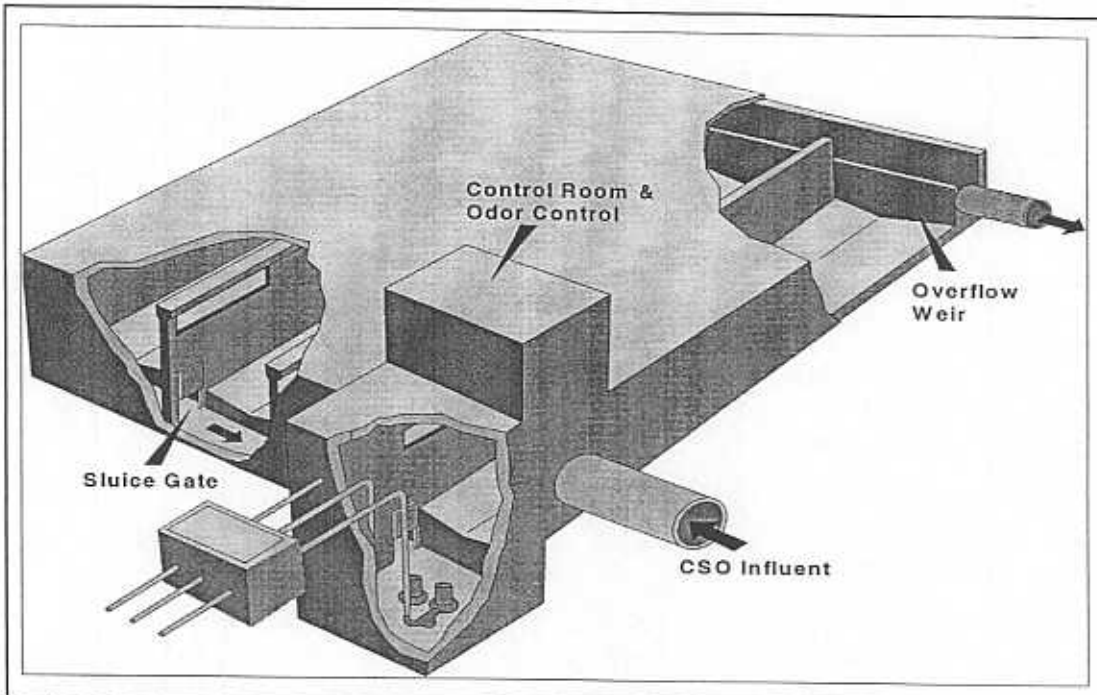

Drainage Basin: University Site 2 **CSO Control Alternative:** Below Grade Rectangular Tank Storage

Location: University east of Driving Range

ENR 5630 for estimate **Sizing:** 12.0 MG

Item Description	Quantity	Unit	Unit Cost	Total Cost
Concrete	33,395	CY	$376.7	$12,578,250
Temporary Sheeting and Shoring	65,100	SF	$11.0	$716,100
Excavation	161,520	CY	$14.0	$2,261,280
Backfill-Native	11,628	CY	$9.0	$104,649
Backfill - Imported	46,511	CY	$29.0	$1,348,815
Disposal of Excess Excavation	149,892	CY	$10.0	$1,498,923
Piling	240,000	LF	$16.5	$3,960,000
Sluice Gates	11	EA	$50,000.0	$550,000
Drainage Pumps and Assoc. Mech./Elect. Equip.	1	LS		$262,367
Street Restoration	17,400	SY	$96.5	$1,679,100
Utility Interference/Relocation	17,400	SY	$25.0	$435,000
Specialty Items				$4,526,400
			Subtotal	**$29,920,884**
Miscellaneous Mechanical/Washdown System	1	LS	5.0%	$1,496,044
Aeration	1	LS	3.0%	$897,627
Landscaping	1	LS	10.0%	$2,992,088
Odor Control	1	LS	10.0%	$2,992,088
Traffic Control	1	LS	$50,000	$50,000
Dewatering	1	LS	2.5%	$748,022
Mobilization/Demobilization	1	LS	10.0%	$3,909,675
Contractor's O & P	1	LS	10.0%	$3,909,675
			Subtotal	**$46,916,105**
Contingency			30%	$14,074,831
Sales Tax			8.2%	$5,001,257
	ESTIMATED CONSTRUCTION COST			**$65,992,193**
Design and Owner Management			35%	$23,097,267
Property Acquisition	172000	SF	$10	$1,720,000
	TOTAL PROJECT COST			**$90,810,000**

University Site 2 Below Grade Rectangular Tank Storag University east of Driving Range

CSO Control Alternative: Storage - Below Grade Rectangular Tank Storage
Data Input Form and Unit Cost Data Input Form

Input Data in Shaded Cells

Assumptions

Cover Depth, ft	5	Over Excavation		
Side Water Depth, ft	12	Bottom	5	ft
Top Slab, ft	1.5	Sides	5	ft
Bottom Slab, ft	3	Wall Thickness		
Freeboard, ft	1.5	Exterior	2	ft
Length/Width Ratio	3	Interior	1.25	ft
Target Stage Width, ft	20	Tank Width	228	ft
Actual Stage Width, ft	19.2	Tank Length	646	ft
		Excavation Depth	28	ft

Calculated Quantities

Req'd Storage Volume (MG)	Concrete Base Slab (CY)	Concrete Walls (CY)	Concrete Top Slab (CY)	Req'd Y Piles (No.)	Sluice Gates (ea)	Hours Req'd to Drain Tank
12.0	16,330	5,930	8,170	3,000	11	48

Req'd Storage Volume (MG)	Excavation (CY)	Backfill (CY)	Backfill Native Mat'l (CY)	Backfill Imported Material (CY)	Haul Excess Material (CY)	Temporary Shoring (SF)	Y Street Restoration (SY)
12.0	161,520	58,139	11,628	46,511	149,892	65,100	17,400

LAND USE CLASSIFICATION WHERE STORAGE IS LOCATED*	1

* 1=Residential, 2=Commercial/Industrial, and 3=Highrise/Downtown Business District

Estimated Costs

ENR Basis 5630

	Quantity	Unit	Unit Cost	Total Cost
Storage Tank Construction				
Concrete - Slab on Grade	16330	CY	$300.0	$4,899,000
Concrete - Walls	8895	CY	$450.0	$4,002,750
Concrete - Elevated Slab	8170	CY	$450.0	$3,676,500
Common Excavation	161,520	CY	$14.0	$2,261,280
Backfill - Imported Material (Including Compaction)	46,511	CY	$29.0	$1,348,815
Backfill - Native Material (Including Compaction)	11,628	CY	$9.0	$104,649
Disposal of Excess Excavation	149,892	CY	$10.0	$1,498,923
Trench Support - Soldier Pile/Sheet	65,100	SF	$11.0	$716,100
Street/Surface Restoration				
Removal and Disposal of Asphalt	17,400	SY	$14.5	$252,300
6" Thick Base Course - Mineral Aggregate Type 2	17,400	SY	$5.5	$95,700
Pavement, Cem Conc CL 6 (1-1/2), 12"	0	SY	$40.0	$0
Pavement, Cem Conc CL 6 (1-1/2), 8" w/ 2" Asphalt Wearing Course	17,400	SY	$36.5	$635,100
Pumps, Associated Piping and Mechical/Electrical Equipment				
Pumps and Associated Piping	6.00	MGD		$175,496
Misc. Mechanical Equipment	1	LS	30.0%	$52,649
Electrical Systems	1	LS	15.0%	$34,222
Specialty Items - Description				
Regulator Station	1	LS	$310,000	$310,000
Connecting Conduit 72-inch	2000	FT	$1,415.0	$2,830,000
Micro tunnel--48-inch from Montlake	1600	FT	$779.0	$1,246,400
Drop Shaft @ Montlake (2 ea)	2	LS	$70,000.0	$140,000

Drainage Basin: University Site 4 **CSO Control Alternative:** Below Grade Circular Tank Storage

Location: UW Parking Area E2

ENR 5630 for estimate **Sizing:** 3.5 MG

Item Description	Quantity	Unit	Unit Cost	Total Cost
Concrete	5,390	CY	$366.0	$1,972,500
Temporary Sheeting and Shoring	30,160	SF	$11.0	$331,760
Excavation	43,550	CY	$14.0	$609,700
Backfill-Native	2,878	CY	$9.0	$25,902
Backfill - Imported	11,512	CY	$29.0	$333,848
Disposal of Excess Excavation	40,672	CY	$10.0	$406,720
Piling	44,800	LF	$16.5	$739,200
Sluice Gates	1	EA	$50,000.0	$50,000
Drainage Pumps and Assoc. Mech./Elect. Equip.	1	LS		$112,367
Street Restoration	3,100	SY	$60.0	$186,000
Utility Interference/Relocation	3,100	SY	$50.0	$155,000
Specialty Items				$1,017,500
			Subtotal	**$5,940,497**
Miscellaneous Mechanical/Washdown System	1	LS	5.0%	$297,025
Aeration	1	LS	3.0%	$178,215
Landscaping	1	LS	2.5%	$148,512
Odor Control	1	LS	10.0%	$594,050
Traffic Control	1	LS	$50,000	$50,000
Dewatering	1	LS	2.5%	$148,512
Mobilization/Demobilization	1	LS	10.0%	$735,681
Contractor's O & P	1	LS	10.0%	$735,681
			Subtotal	**$8,828,174**
Contingency			30%	$2,648,452
Sales Tax			8.2%	$941,083
	ESTIMATED CONSTRUCTION COST			**$12,417,709**
Design and Owner Management			35%	$4,346,198
Property Acquisition	34000	SF	$17	$578,000
	TOTAL PROJECT COST			**$17,350,000**

CSO Control Alternative: Storage - Below Grade Rectangular Tank Storage
Data Input Form and Unit Cost Data Input Form

Input Data in Shaded Cells

Assumptions

Cover Depth, ft	10	Over Excavation:		
Side Water Depth, ft	18	Bottom	5	ft
Top Slab, ft	1.5	Sides	5	ft
Bottom Slab, ft	3	Wall Thickness	2	ft
Freeboard, ft	1.5			
Tank Diam, ft	182			
Excavation Depth, ft	39			

Calculated Quantities

Req'd Storage Volume (MG)	Concrete: Base Slab (CY)	Walls (CY)	Top Slab (CY)	Columns (CY)	Req'd Y Piles (No.)	Sluice Gates (ea)	Hours Req'd to Drain Tank
3.5	3,020	780	1,510	80	560	1	48

Req'd Storage Volume (MG)	Excavation (CY)	Backfill (CY)	Backfill Native Mat'l (CY)	Backfill Imported Material (CY)	Haul Excess Material (CY)	Temporary Shoring (SF)	Y Street Restoration (SY)
3.5	43,550	14,390	2,878	11,512	40,672	30,160	3,100

LAND USE CLASSIFICATION WHERE STORAGE IS LOCATED* 2

* 1=Residential, 2=Commercial/Industrial, and 3=Highrise/Downtown Business District

Estimated Costs

ENR Basis 5630	Quantity	Unit	Unit Cost	Total Cost
Storage Tank Construction				
Concrete - Slab on Grade	3020	CY	$300.0	$906,000
Concrete - Walls	780	CY	$450.0	$351,000
Concrete - Elevated Slab	1510	CY	$450.0	$679,500
Concrete - Columns	80	CY	$450.0	$36,000
Common Excavation	43,550	CY	$14.0	$609,700
Backfill - Imported Material (Including Compaction)	11,512	CY	$29.0	$333,848
Backfill - Native Material (Including Compaction)	2,878	CY	$9.0	$25,902
Disposal of Excess Excavation	40,672	CY	$10.0	$406,720
Trench Support - Soldier Pile/Sheet	30,160	SF	$11.0	$331,760
Street/Surface Restoration				
Removal and Disposal of Asphalt	3,100	SY	$14.5	$44,950
6" Thick Base Course - Mineral Aggregate Type 2	3,100	SY	$5.5	$17,050
Pavement, Cem Conc CL 6 (1-1/2), 12"	3,100	SY	$40.0	$124,000
Pavement, Cem Conc CL 6 (1-1/2), 8" w/ 2" Asphalt Wearing Course	0	SY	$0.0	$0
Pumps, Associated Piping and Mechical/Electrical Equipment				
Pumps and Associated Piping	1.75	MGD		$75,162
Misc. Mechanical Equipment	1	LS	30.0%	$22,549
Electrical Systems	1	LS	15.0%	$14,657
Specialty Items - Description				
Regulator Station	1	LS	$310,000	$310,000
Connecting Conduit 72-inch	500	FT	$1,415.0	$707,500

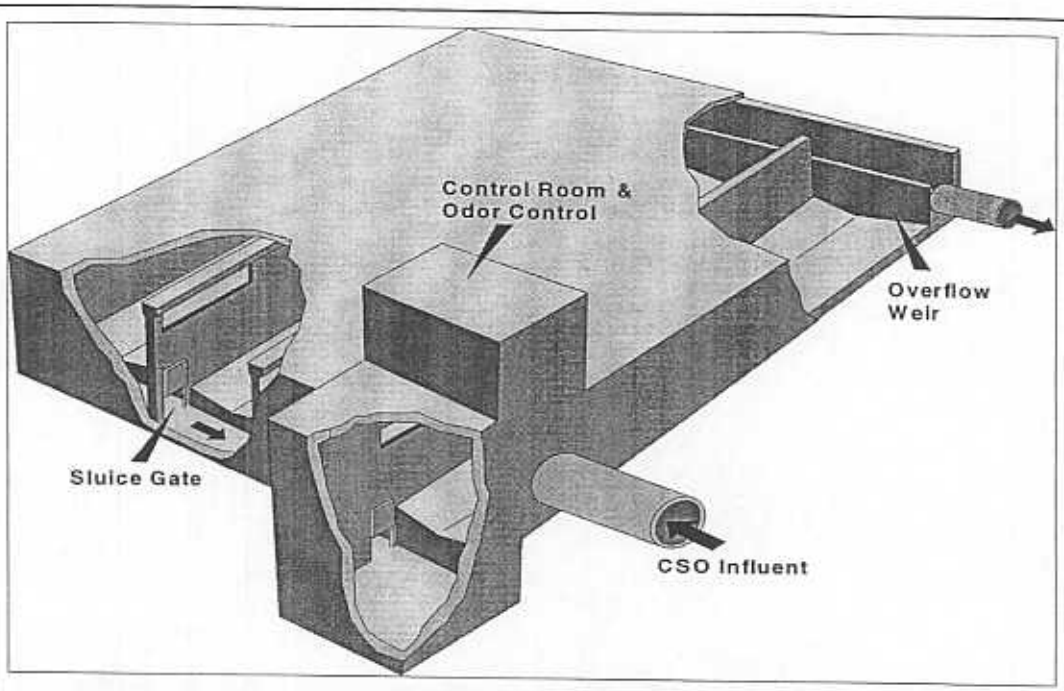

Drainage Basin: University Site 5 **CSO Control Alternative:** Below Grade Rectangular Tank Storage

Location: Beneath Ravenna Creek

ENR 5630 for estimate **Sizing:** 2.0 MG

Item Description	Quantity	Unit	Unit Cost	Total Cost
Concrete	5,330	CY	$393.2	$2,095,500
Temporary Sheeting and Shoring	64,100	SF	$11.0	$705,100
Excavation	29,510	CY	$14.0	$413,140
Backfill-Native	2,676	CY	$9.0	$24,084
Backfill - Imported	10,704	CY	$29.0	$310,416
Disposal of Excess Excavation	26,834	CY	$10.0	$268,340
Piling	0	LF	$16.5	$0
Sluice Gates	1	EA	$50,000.0	$50,000
Drainage Pumps and Assoc. Mech./Elect. Equip.	1	LS		$85,897
Street Restoration	3,000	SY	$60.0	$180,000
Utility Interference/Relocation	3,000	SY	$100.0	$300,000
Specialty Items				$1,017,500
			Subtotal	**$5,449,977**
Miscellaneous Mechanical/Washdown System	1	LS	5.0%	$272,499
Aeration	1	LS	3.0%	$163,499
Landscaping	1	LS	2.5%	$136,249
Odor Control	1	LS	10.0%	$544,998
Traffic Control	1	LS	$50,000	$50,000
Dewatering	1	LS	2.5%	$136,249
Mobilization/Demobilization	1	LS	10.0%	$675,347
Contractor's O & P	1	LS	10.0%	$675,347
			Subtotal	**$8,104,166**
Contingency			30%	$2,431,250
Sales Tax			8.2%	$863,904
	ESTIMATED CONSTRUCTION COST			**$11,399,319**
Design and Owner Management			35%	$3,989,762
Property Acquisition	29000	SF	$17	$493,000
	TOTAL PROJECT COST			**$15,890,000**

CSO Control Alternative: Storage - Below Grade Rectangular Tank Storage
Data Input Form and Unit Cost Data Input Form

Input Data in Shaded Cells

Assumptions

Cover Depth, ft	1.5	Over Excavation		
Side Water Depth, ft	18	Bottom	5	ft
Top Slab, ft	1.5	Sides	5	ft
Bottom Slab, ft	3	Wall Thickness		
Freeboard, ft	1.5	Exterior	2	ft
Length/Width Ratio	38	Interior	1.25	ft
Target Stage Width, ft	20	Tank Width	24	ft
Actual Stage Width, ft	19.8	Tank Length	764	ft
		Excavation Depth	30.5	ft

Calculated Quantities

Req'd Storage Volume (MG)	Concrete: Base Slab (CY)	Concrete: Walls (CY)	Concrete: Top Slab (CY)	Req'd N Piles (No.)	Sluice Gates (ea)	Hours Req'd to Drain Tank
2.0	2,020	2,300	1,010	0	1	48

Req'd Storage Volume (MG)	Excavation (CY)	Backfill (CY)	Backfill Native Matl (CY)	Backfill Imported Material (CY)	Haul Excess Material (CY)	Temporary Shoring (SF)	Y Street Restoration (SY)
2.0	29,510	13,380	2,676	10,704	26,834	64,100	3,000

LAND USE CLASSIFICATION WHERE STORAGE IS LOCATED*	2

* 1=Residential, 2=Commercial/Industrial, and 3=Highrise/Downtown Business District

Estimated Costs

ENR Basis 5630	Quantity	Unit	Unit Cost	Total Cost
Storage Tank Construction				
Concrete - Slab on Grade	2020	CY	$300.0	$606,000
Concrete - Walls	2300	CY	$450.0	$1,035,000
Concrete - Elevated Slab	1010	CY	$450.0	$454,500
Common Excavation	29,510	CY	$14.0	$413,140
Backfill - Imported Material (Including Compaction)	10,704	CY	$29.0	$310,416
Backfill - Native Material (Including Compaction)	2,676	CY	$9.0	$24,084
Disposal of Excess Excavation	26,834	CY	$10.0	$268,340
Trench Support - Soldier Pile/Sheet	64,100	SF	$11.0	$705,100
Street/Surface Restoration				
Removal and Disposal of Asphalt	3,000	SY	$14.5	$43,500
6" Thick Base Course - Mineral Aggregate Type 2	3,000	SY	$5.5	$16,500
Pavement, Cem Conc CL 6 (1-1/2), 12"	3,000	SY	$40.0	$120,000
Pavement, Cem Conc CL 6 (1-1/2), 8" w/ 2" Asphalt Wearing Course	0	SY	$0.0	$0
Pumps, Associated Piping and Mechical/Electrical Equipment				
Pumps and Associated Piping	1.00	MGD		$57,456
Misc. Mechanical Equipment	1	LS	30.0%	$17,237
Electrical Systems	1	LS	15.0%	$11,204
Specialty Items - Description				
Regulator Station	1	LS	$310,000	$310,000
Connecting Conduit 72-inch	500	FT	$1,415.0	$707,500

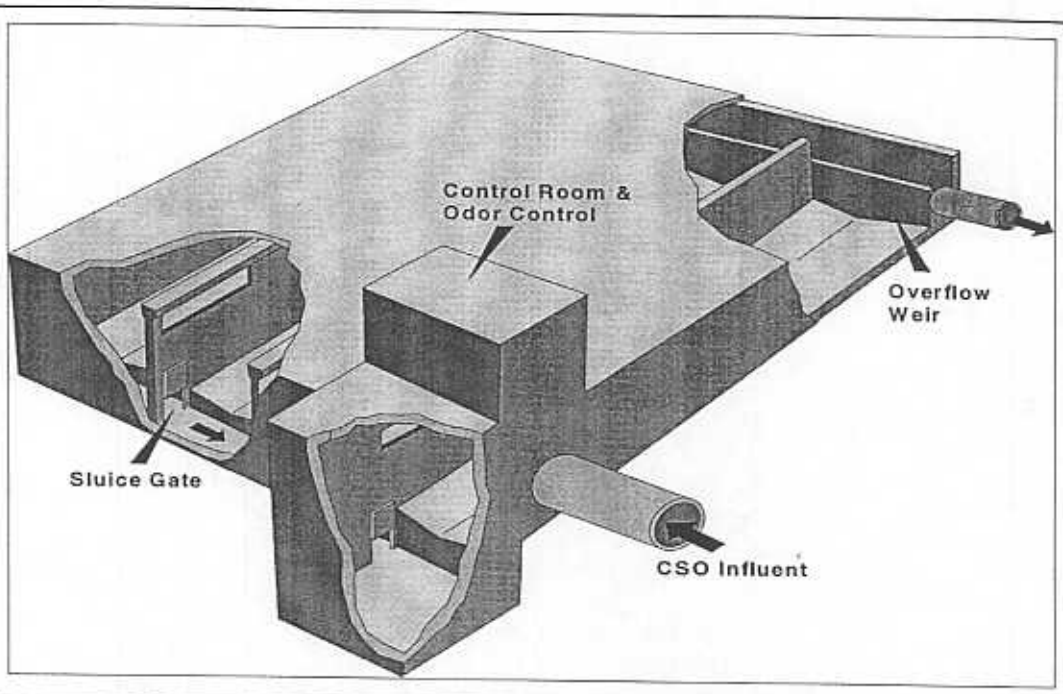

Drainage Basin: University Site 6 **CSO Control Alternative:** Below Grade Rectangular Tank Storage

Location: Beneath UW Portage Vista

ENR 5630 for estimate **Sizing:** 5.5 MG

Item Description	Quantity	Unit	Unit Cost	Total Cost
Concrete	10,940	CY	$379.9	$4,156,500
Temporary Sheeting and Shoring	57,400	SF	$11.0	$631,400
Excavation	74,450	CY	$14.0	$1,042,300
Backfill-Native	6,716	CY	$9.0	$60,444
Backfill - Imported	26,864	CY	$29.0	$779,056
Disposal of Excess Excavation	67,734	CY	$10.0	$677,340
Piling	0	LF	$16.5	$0
Sluice Gates	5	EA	$50,000.0	$250,000
Drainage Pumps and Assoc. Mech./Elect. Equip.	1	LS		$244,720
Street Restoration	5,800	SY	$96.5	$559,700
Utility Interference/Relocation	5,800	SY	$100.0	$580,000
Specialty Items				$2,713,900
			Subtotal	**$11,695,360**
Miscellaneous Mechanical/Washdown System	1	LS	10.0%	$1,169,536
Aeration	1	LS	3.0%	$350,861
Landscaping	1	LS	10.0%	$1,169,536
Odor Control	1	LS	10.0%	$1,169,536
Traffic Control	1	LS	$50,000	$50,000
Dewatering	1	LS	2.5%	$292,384
Mobilization/Demobilization	1	LS	10.0%	$1,589,721
Contractor's O & P	1	LS	10.0%	$1,589,721
			Subtotal	**$19,076,655**
Contingency			30%	$5,722,996
Sales Tax			8.2%	$2,033,571
	ESTIMATED CONSTRUCTION COST			**$26,833,222**
Design and Owner Management			35%	$9,391,628
Property Acquisition	57000	SF	$17	$969,000
	TOTAL PROJECT COST			**$37,200,000**

CSO Control Alternative: Storage - Below Grade Rectangular Tank Storage
Data Input Form and Unit Cost Data Input Form

Input Data in Shaded Cells

Assumptions

Cover Depth, ft	10		Over Excavation	
Side Water Depth, ft	18		Bottom	5 ft
Top Slab, ft	1.5		Sides	5 ft
Bottom Slab, ft	3		Wall Thickness	
Freeboard, ft	1.5		Exterior	2 ft
Length/Width Ratio	4.5		Interior	1.25 ft
Target Stage Width, ft	20		Tank Width	104 ft
Actual Stage Width, ft	19.1		Tank Length	441 ft
			Excavation Depth	39 ft

Calculated Quantities

Req'd Storage Volume (MG)	Concrete Base Slab (CY)	Concrete Walls (CY)	Concrete Top Slab (CY)	Req'd N Piles (No.)	Sluice Gates (ea)	Hours Req'd to Drain Tank
5.5	5,110	3,270	2,560	0	5	24

Req'd Storage Volume (MG)	Excavation (CY)	Backfill (CY)	Backfill Native Mat'l (CY)	Backfill Imported Material (CY)	Haul Excess Material (CY)	Temporary Shoring (SF)	Y Street Restoration (SY)
5.5	74,450	33,580	6,716	26,864	67,734	57,400	5,800

LAND USE CLASSIFICATION WHERE STORAGE IS LOCATED*	1

* 1=Residential, 2=Commercial/Industrial, and 3=Highrise/Downtown Business District

Estimated Costs

ENR Basis 5630

	Quantity	Unit	Unit Cost	Total Cost
Storage Tank Construction				
Concrete - Slab on Grade	5110	CY	$300.0	$1,533,000
Concrete - Walls	3270	CY	$450.0	$1,471,500
Concrete - Elevated Slab	2560	CY	$450.0	$1,152,000
Common Excavation	74,450	CY	$14.0	$1,042,300
Backfill - Imported Material (Including Compaction)	26,864	CY	$29.0	$779,056
Backfill - Native Material (Including Compaction)	6,716	CY	$9.0	$60,444
Disposal of Excess Excavation	67,734	CY	$10.0	$677,340
Trench Support - Soldier Pile/Sheet	57,400	SF	$11.0	$631,400
Street/Surface Restoration				
Removal and Disposal of Asphalt	5,800	SY	$14.5	$84,100
6" Thick Base Course - Mineral Aggregate Type 2	5,800	SY	$5.5	$31,900
Pavement, Cem Conc CL 6 (1-1/2), 12"	0	SY	$40.0	$0
Pavement, Cem Conc CL 6 (1-1/2), 8" w/ 2" Asphalt Wearing Course	5,800	SY	$36.5	$211,700
Pumps, Associated Piping and Mechical/Electrical Equipment				
Pumps and Associated Piping	5.50	MGD		$163,692
Misc. Mechanical Equipment	1	LS	30.0%	$49,108
Electrical Systems	1	LS	15.0%	$31,920
Specialty Items - Description				
Regulator Station	2	LS	$310,000	$620,000
Connecting Conduit 72-inch	500	FT	$1,415.0	$707,500
Micro tunnel-48-inch from Montlake	1600	FT	$779.0	$1,246,400
Drop Shaft @ Montlake (2 ea)	2	LS	$70,000.0	$140,000

Drainage Basin: North Interceptor **CSO Control Alternative:** Below Grade Circular Tank Storage

Location: Ballard

ENR 5630 for estimate **Sizing:** 1.0 MG

Item Description	Quantity	Unit	Unit Cost	Total Cost
Concrete	1,630	CY	$369.0	$601,500
Temporary Sheeting and Shoring	17,540	SF	$11.0	$192,940
Excavation	14,720	CY	$14.0	$206,080
Backfill-Native	1,262	CY	$9.0	$11,358
Backfill - Imported	5,048	CY	$29.0	$146,392
Disposal of Excess Excavation	13,458	CY	$10.0	$134,580
Piling	12,800	LF	$16.5	$211,200
Sluice Gates	1	EA	$10,000.0	$10,000
Drainage Pumps and Assoc. Mech./Elect. Equip.	1	LS		$68,267
Street Restoration	0	SY	$0.0	$0
Utility Interference/Relocation	900	SY	$50.0	$45,000
Specialty Items				$0
			Subtotal	**$1,627,317**
Miscellaneous Mechanical/Washdown System	1	LS	3.0%	$48,820
Aeration	0	LS	0.0%	$0
Landscaping	1	LS	1.5%	$24,410
Odor Control	1	LS	5.0%	$81,366
Traffic Control	1	LS	$50,000	$50,000
Dewatering	1	LS	2.5%	$40,683
Mobilization/Demobilization	1	LS	10.0%	$187,260
Contractor's O & P	1	LS	10.0%	$187,260
			Subtotal	**$2,247,115**
Contingency			30%	$674,134
Sales Tax			8.2%	$239,542
ESTIMATED CONSTRUCTION COST				**$3,160,791**
Design and Owner Management			35%	$1,106,277
Property Acquisition	12000	SF	$17	$204,000
Conveyance Elements: Weir structure, 80-ft 42" RCP, 1650-ft 36" RCP (City intercepteor)				$1,946,789
TOTAL PROJECT COST				**$6,420,000**

CSO Control Alternative: Storage - Below Grade Rectangular Tank Storage
Data Input Form and Unit Cost Data Input Form

Input Data In Shaded Cells

Assumptions

Cover Depth, ft	10	Over Excavation:		
Side Water Depth, ft	18	Bottom	5	ft
Top Slab, ft	1.5	Sides	7	ft
Bottom Slab, ft	3	Wall Thickness	1.3	ft
Freeboard, ft	1.5			
Tank Diam, ft	97			
Excavation Depth, ft	39			

Calculated Quantities

Req'd Storage Volume (MG)	Concrete: Base Slab (CY)	Walls (CY)	Top Slab (CY)	Columns (CY)	Req'd Y Piles (No.)	Sluice Gates (ea)	Hours Req'd to Drain Tank
1.0	880	280	440	30	160	1	48

Req'd Storage Volume (MG)	Excavation (CY)	Backfill (CY)	Backfill Native Mat'l (CY)	Backfill Imported Material (CY)	Haul Excess Material (CY)	Temporary Shoring (SF)	N Street Restoration (SY)
1.0	14,720	6,310	1,262	5,048	13,458	17,540	0

LAND USE CLASSIFICATION WHERE STORAGE IS LOCATED*	2

* 1=Residential, 2=Commercial/Industrial, and 3=Highrise/Downtown Business District

Estimated Costs

ENR Basis 5630

	Quantity	Unit	Unit Cost	Total Cost
Storage Tank Construction				
Concrete - Slab on Grade	880	CY	$300.0	$264,000
Concrete - Walls	280	CY	$450.0	$126,000
Concrete - Elevated Slab	440	CY	$450.0	$198,000
Concrete - Columns	30	CY	$450.0	$13,500
Common Excavation	14,720	CY	$14.0	$206,080
Backfill - Imported Material (Including Compaction)	5,048	CY	$29.0	$146,392
Backfill - Native Material (Including Compaction)	1,262	CY	$9.0	$11,358
Disposal of Excess Excavation	13,458	CY	$10.0	$134,580
Trench Support - Soldier Pile/Sheet	17,540	SF	$11.0	$192,940
Street/Surface Restoration				
Removal and Disposal of Asphalt	0	SY	$0.0	$0
6" Thick Base Course - Mineral Aggregate Type 2	0	SY	$0.0	$0
Pavement, Cem Conc CL 6 (1-1/2), 12"	0	SY	$0.0	$0
Pavement, Cem Conc CL 6 (1-1/2), 8" w/ 2" Asphalt Wearing Course	0	SY	$0.0	$0
Pumps, Associated Piping and Mechical/Electrical Equipment				
Pumps and Associated Piping	0.50	MGD		$45,664
Misc. Mechanical Equipment	1	LS	30.0%	$13,699
Electrical Systems	1	LS	15.0%	$8,904
Specialty Items - Description				
				$0
				$0

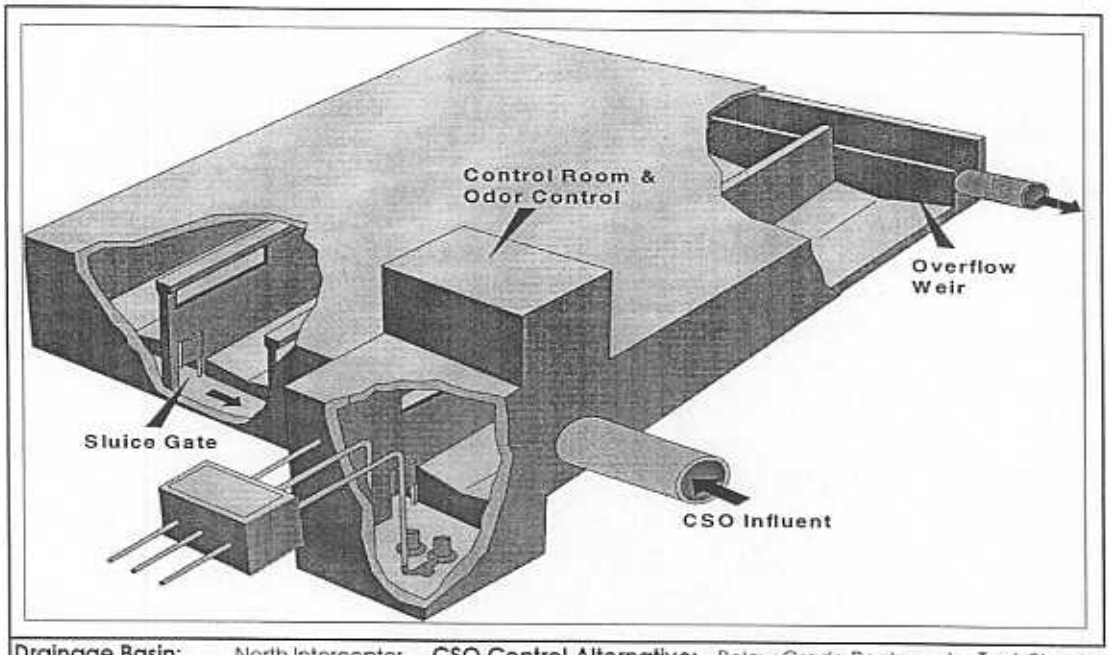

Drainage Basin: North Interceptor **CSO Control Alternative:** Below Grade Rectangular Tank Storage

Location: 11th Ave. NW

ENR 5630 for estimate **Sizing:** 1.7 MG

Item Description	Quantity	Unit	Unit Cost	Total Cost
Concrete	4,260	CY	$380.3	$1,620,000
Temporary Sheeting and Shoring	22,800	SF	$11.0	$250,800
Excavation	20,970	CY	$14.0	$293,580
Backfill-Native	1,490	CY	$9.0	$13,410
Backfill - Imported	5,960	CY	$29.0	$172,840
Disposal of Excess Excavation	19,480	CY	$10.0	$194,800
Piling	0	LF	$16.5	$0
Sluice Gates	4	EA	$50,000.0	$200,000
Drainage Pumps and Assoc. Mech./Elect. Equip.	1	LS		$80,691
Street Restoration	2,400	SY	$60.0	$144,000
Utility Interference/Relocation	2,400	SY	$100.0	$240,000
Specialty Items				$0
			Subtotal	**$3,210,121**
Miscellaneous Mechanical/Washdown System	1	LS	5.0%	$160,506
Aeration	1	LS	3.0%	$96,304
Landscaping	1	LS	2.5%	$80,253
Odor Control	1	LS	5.0%	$160,506
Traffic Control	1	LS	$50,000	$50,000
Dewatering	1	LS	2.5%	$80,253
Mobilization/Demobilization	1	LS	10.0%	$383,794
Contractor's O & P	1	LS	10.0%	$383,794
			Subtotal	**$4,605,531**
Contingency			30%	$1,381,659
Sales Tax			8.2%	$490,950
	ESTIMATED CONSTRUCTION COST			**$6,478,140**
Design and Owner Management			35%	$2,267,349
Property Acquisition	24000	SF	$17	$408,000
Conveyance: regulator, 80-ft 54" RCP, 200-ft 8" forcemain				$997,046
	TOTAL PROJECT COST			**$10,160,000**

CSO Control Alternative: Storage - Below Grade Rectangular Tank Storage
Data Input Form and Unit Cost Data Input Form

Input Data In Shaded Cells

Assumptions

Cover Depth, ft	1.5	Over Excavation		
Side Water Depth, ft	15	Bottom	5	ft
Top Slab, ft	1.5	Sides	5	ft
Bottom Slab, ft	3	Wall Thickness		
Freeboard, ft	1	Exterior	2	ft
Length/Width Ratio	3	Interior	1.25	ft
Target Stage Width, ft	20	Tank Width	79	ft
Actual Stage Width, ft	17.8	Tank Length	226	ft
		Excavation Depth	27	ft

Calculated Quantities

Req'd Storage Volume (MG)	Concrete Base Slab (CY)	Concrete Walls (CY)	Concrete Top Slab (CY)	Req'd N Piles (No.)	Sluice Gates (ea)	Hours Req'd to Drain Tank
1.7	1,980	1,290	990	0	4	48

Req'd Storage Volume (MG)	Excavation (CY)	Backfill (CY)	Backfill Native Mat'l (CY)	Backfill Imported Material (CY)	Haul Excess Material (CY)	Temporary Shoring (SF)	Y Street Restoration (SY)
1.7	20,970	7,450	1,490	5,960	19,480	22,800	2,400

LAND USE CLASSIFICATION WHERE STORAGE IS LOCATED* 2

* 1=Residential, 2=Commercial/Industrial, and 3=Highrise/Downtown Business District

Estimated Costs

ENR Basis 5630	Quantity	Unit	Unit Cost	Total Cost
Storage Tank Construction				
Concrete - Slab on Grade	1980	CY	$300.0	$594,000
Concrete - Walls	1290	CY	$450.0	$580,500
Concrete - Elevated Slab	990	CY	$450.0	$445,500
Common Excavation	20,970	CY	$14.0	$293,580
Backfill - Imported Material (Including Compaction)	5,960	CY	$29.0	$172,840
Backfill - Native Material (Including Compaction)	1,490	CY	$9.0	$13,410
Disposal of Excess Excavation	19,480	CY	$10.0	$194,800
Trench Support - Soldier Pile/Sheet	22,800	SF	$11.0	$250,800
Street/Surface Restoration				
Removal and Disposal of Asphalt	2,400	SY	$14.5	$34,800
6" Thick Base Course - Mineral Aggregate Type 2	2,400	SY	$5.5	$13,200
Pavement, Cem Conc CL 6 (1-1/2), 12"	2,400	SY	$40.0	$96,000
Pavement, Cem Conc CL 6 (1-1/2), 8" w/ 2" Asphalt Wearing Course	0	SY	$0.0	$0
Pumps, Associated Piping and Mechical/Electrical Equipment				
Pumps and Associated Piping	0.85	MGD		$53,974
Misc. Mechanical Equipment	1	LS	30.0%	$16,192
Electrical Systems	1	LS	15.0%	$10,525
Specialty Items - Description				
Regulator Station		LS	$310,000	$0
Connecting Conduit 72-inch		FT	$1,415.0	$0
				$0

METRO CSO 5-YEAR UPDATE
ALTERNATIVE INFORMATION SUMMARY

Alternative Name: Ballard Storage

Alternative Type: (e.g., treatment, conveyance, separation) Storage

Affected CSOs:

CSO Name	Annual Base Volume, mg	Annual 1996 Volume, mg	Storm No. 6 1996 Volume, mg	Storm No. 6 Peak Rate, mgd
Ballard Reg.	28.0	1 (4)	0.1 (0.4)	3.5 (5.6)
11th Ave NW		16 (18)	1.5 (1.7)	19.4 (19.9)
City of Seattle 150-151			0.6	

*Values in parentheses are with West Point set point at 440 mgd.

Alternative Description:

This alternative involves the provision of storage for CSO control at two locations in Ballard. A 2 million gallon tank would be constructed at the southeast corner of the intersection of NW 45th and 11th Ave. NW, and a 1 million gallon tank would be located at the southwest corner of the intersection of Shilshole Way and 24th Ave. NW. The 11th Ave. facilities will also include a diversion chamber on 11th Ave. NW, and 30 feet of 14-inch gravity sewer to convey flow into the storage tank. The tank will be equipped with a 1 MGD pump station which will pump flow through 60 feet of 12-inch force main into the existing 54-inch sanitary sewer on NW 45th St. Associated structures required for the Shilshole facility will include a regulator station, and 100 feet of 10-inch gravity sewer. This tank will also incorporate a pump station which will pump flow through an approximately 50-foot long, 8-inch force main to an exisitng manhole on Shilshole Way. This alternative also includes 2,500 feet of 24-inch sewer to convey city overflows to the tank near the regulator.

Major problems/barriers/issues to be resolved: (e.g., permitting, optimization)

Major issues associated with this alternative include obtaining the site designated for tank construction, and disruption to traffic along NW 45th St and Shilshole Way.

Capital Cost (1994 $): $ ~~22~~ 18.0 million (Attach cost summary spreadsheet and detailed cost estimates.)

Briefly describe the alternative's characteristics in each of the following categories:

CATEGORY	CHARACTERISTICS
Impact on Natural Environment	This alternative will affect receiving water quality by reducing the discharge of untreated sanitary sewage to surface water.
Impact on Social Environment	This alternative will result in some traffic disruption along NW 45th St and Shilshole Way.
Impact on Public Health and Safety	Possible slight negative safety impacts due to traffic disruption during construction. Public health impacts equivalent to all other 1-year CSO reduction alternatives.
Fairness and Equity	This alternative will place several underground facilities south of NW 45th St. and at the Shilshole intersection. The land use in this area is predominantly industrial and commercial.
Economic Impacts	The capital cost of this alternative is $~~162~~ 18 million.
Flexibility	This alternative would not preclude additional CSO reduction through separation or other management alternatives.

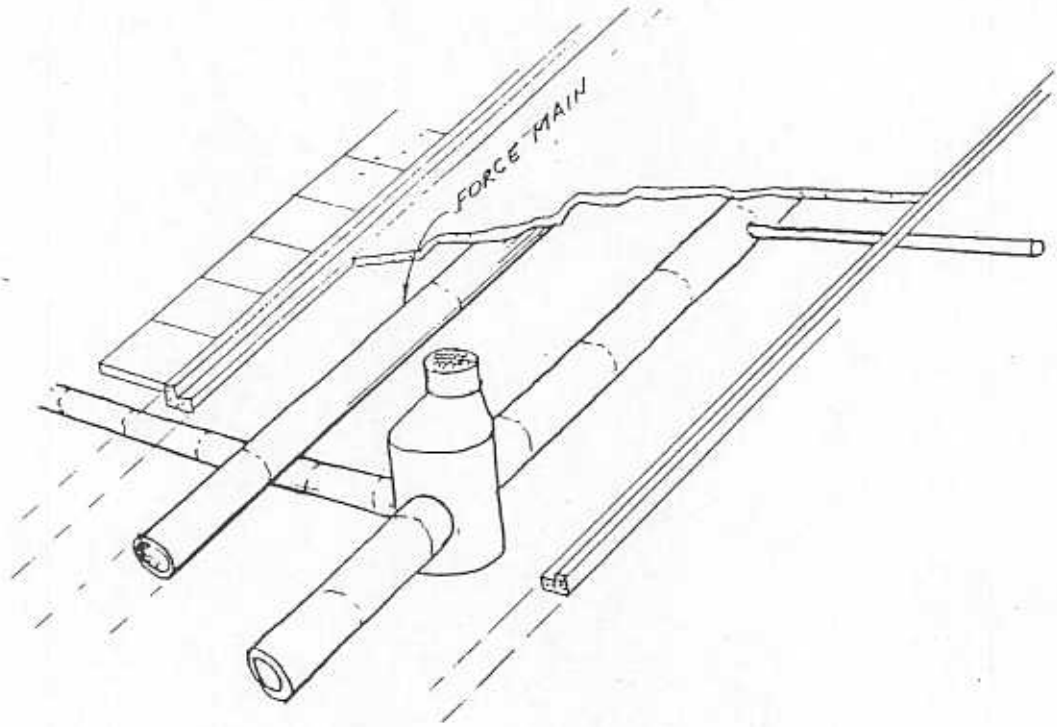

Drainage Basin: North Interceptor **CSO Control Element:** 60 LF of 12-Inch Force Main - 12' to 36' Depth to Invert

Revised: 5/2/94 **Alternative Description:** Ballard CSO Storage

Item Description	Quant.	Unit	Unit Cost	Total Cost
12 -Inch Diameter Force Main	60	LF	$223.0	$13,380
-Inch Diameter Force Main		LF		$0
-Inch Diameter Force Main		LF		$0
-Inch Diameter Force Main		LF		$0
Street Restoration	120	SY	$59.5	$7,140
			SUBTOTAL:	**$20,520**
Mobilization/Demobilization (10%)	1	LS	$2,052.0	$2,052
Contractor's O & P (10%)	1	LS	$2,052.0	$2,052
			ESTIMATED CONSTRUCTION COST:	**$24,624**
Contingency (On Estimated Construction Cost)			30%	$7,387
Sales Tax (On Construction Cost and Contingency)			8.2%	$2,625
			TOTAL ESTIMATED CONSTRUCTION COST:	**$34,636**
Design and Owner Management			35%	$12,123
			TOTAL PROJECT COST:	**$46,759**

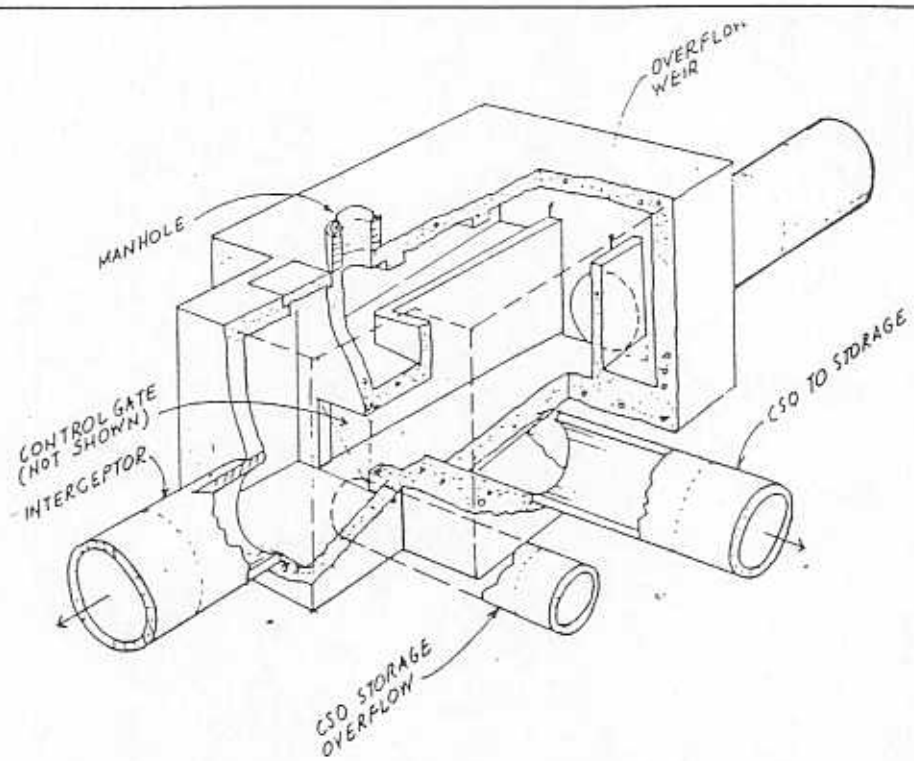

Drainage Basin: North Interceptor **CSO Control Element:** Flow Regulator Structure for 72-Inch Interceptor

Revised: 5/2/94 **Alternative Description:** Ballard CSO Storage

Item Description	Quant.	Unit	Unit Cost	Total Cost
Concrete	151	CY	$400.0	$60,400
Temporary Sheeting and Shoring	4,255	SF	$11.0	$46,805
Excavation	948	CY	$14.0	$13,272
Backfill-Native	104	CY	$9.0	$936
Backfill - Imported	416	CY	$29.0	$12,064
Disposal of Excess Excavation	844	CY	$10.0	$8,440
Sluice Gates	1	EA	$75,000	$75,000
Street Restoration	118	SY	$60.0	$7,084
Demolish Existing Interceptor/Construct Temporary Bypass	1	LS	$27,902	$27,902
Traffic Control	1	LS	$50,000	$50,000
Utility Interference/Relocation	118	SY	$100.0	$11,806
Dewatering (2.5%)	1	LS	$7,843	$7,843
			SUBTOTAL:	**$321,552**
Mobilization/Demobilization (10%)	1	LS	$32,155	$32,155
Contractor's O & P (10%)	1	LS	$32,155	$32,155
			ESTIMATED CONSTRUCTION COST:	**$385,862**
Contingency (On Estimated Construction Cost)			30%	$115,759
Sales Tax (On Construction Cost and Contingency)			8.2%	$41,133
			TOTAL ESTIMATED CONSTRUCTION COST:	**$542,754**
Design and Owner Management			35%	$189,964
			TOTAL PROJECT COST:	**$732,718**

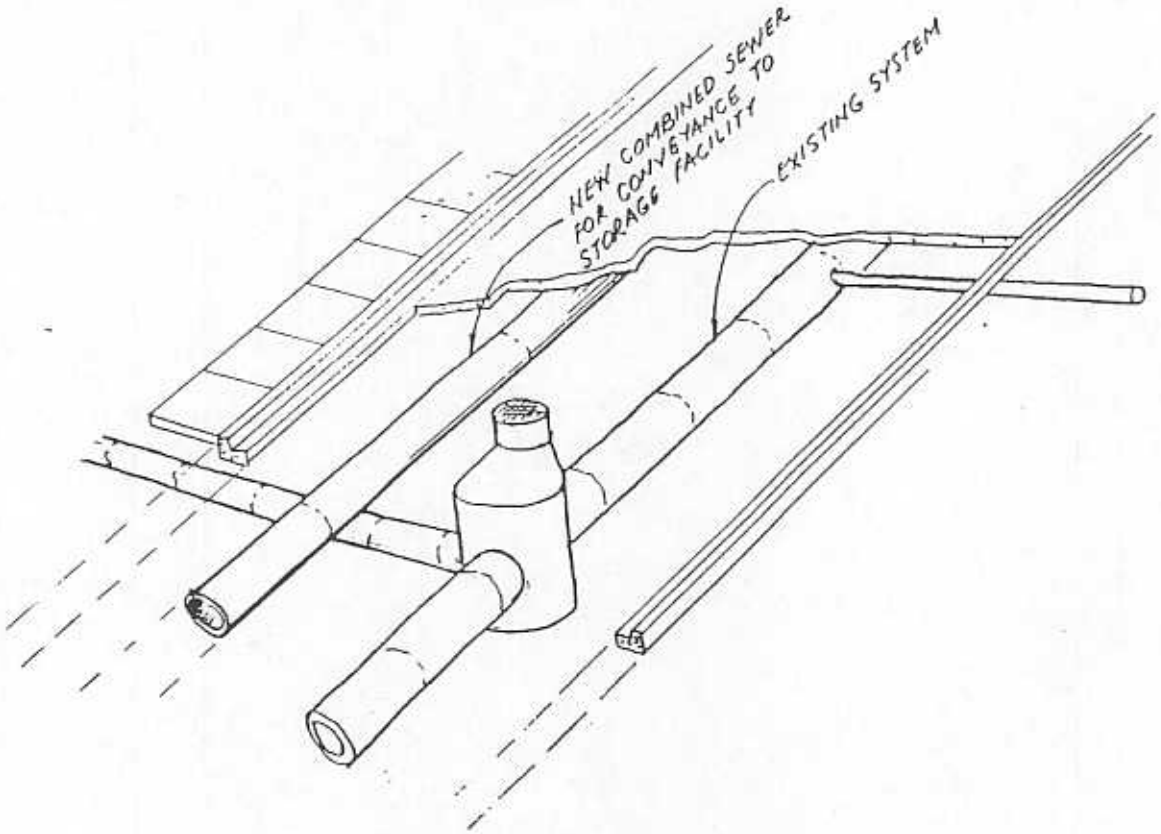

Drainage Basin: North Interceptor **CSO Control Element:** 30 LF of 18-inch RCP - (12' to Invert)

Revised: 5/2/94 **Alternative Description:** Ballard CSO Storage

Item Description	Quant.	Unit	Unit Cost	Total Cost
18 -Inch Diameter RCP	30	LF	$193.0	$5,790
-Inch Diameter RCP		LF		$0
-Inch Diameter RCP		LF		$0
-Inch Diameter RCP		LF		$0
Street Restoration	60	SY	$59.5	$3,570
			SUBTOTAL:	**$9,360**
Mobilization/Demobilization (10%)	1	LS	$936.0	$936
Contractor's O & P (10%)	1	LS	$936.0	$936
			ESTIMATED CONSTRUCTION COST:	**$11,232**
			Contingency (On Estimated Construction Cost) 30%	$3,370
			Sales Tax (On Construction Cost and Contingency) 8.2%	$1,197
			TOTAL ESTIMATED CONSTRUCTION COST:	**$15,799**
			Design and Owner Management 35%	$5,530
			TOTAL PROJECT COST:	**$21,329**

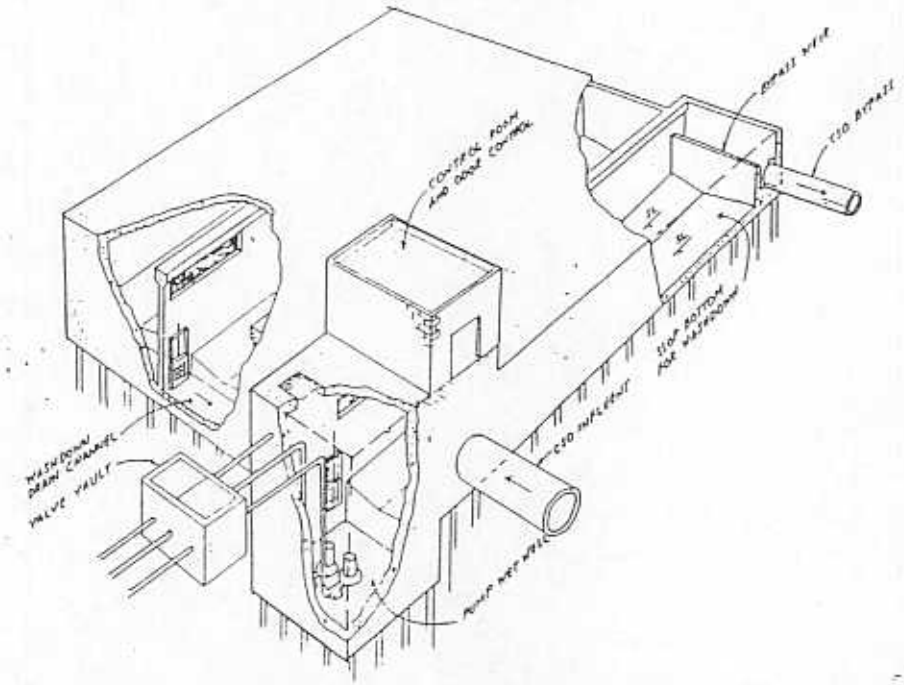

Drainage Basin: **North Interceptor CSO Control Element:** 2.0 MG Below Grade Rectangular Tank Storage

Revised: 5/2/94 **Alternative Description:** Ballard CSO Storage

Item Description	Quant.	Unit	Unit Cost	Total Cost
Concrete	4,454	CY	$380	$1,692,520
Temporary Sheeting and Shoring	28,481	SF	$11.0	$313,291
Excavation	30,306	CY	$14.0	$424,284
Backfill-Native	2,749	CY	$9.0	$24,741
Backfill - Imported	10,997	CY	$29.0	$318,913
Disposal of Excess Excavation	27,557	CY	$10.0	$275,570
Piling	0	LF	$16.5	$0
Sluice Gates	6	EA	$50,000	$300,000
Pumps, Associated Piping and Mechanical Equipment	1	LS	$85,888	$85,888
Street Restoration	2,424	SY	$56.5	$136,961
Utility Interference/Relocation	2,424	SY	$100	$242,410
			SUBTOTAL:	**$3,814,578**
Aeration (3%)	1	LS	$114,437	$114,437
Mechanical Washdown System (5%)	1	LS	$190,729	$190,729
Odor Control (5%)	1	LS	$190,729	$190,729
Traffic Control	1	LS	$50,000	$50,000
Dewatering (2.5%)	1	LS	$95,364	$95,364
Mobilization/Demobilization (10%)	1	LS	$445,584	$445,584
Contractor's O & P (10%)	1	LS	$445,584	$445,584
ESTIMATED CONSTRUCTION COST:				**$5,347,005**
Contingency (On Estimated Construction Cost)			30%	$1,604,101
Sales Tax (On Construction Cost and Contingency)			8.2%	$569,991
TOTAL ESTIMATED CONSTRUCTION COST:				**$7,521,097**
Design and Owner Management			35%	$2,632,384
Property Acquisition (Inc. 30% Contingency & 15% Management)	21,817	SF	$17	$370,887
TOTAL PROJECT COST:				**$10,524,367**

METRO CSO 5-YEAR UPDATE
ALTERNATIVE INFORMATION SUMMARY

Alternative Name: Carkeek Flow Management/Ballard Storage

Alternative Type: (e.g., treatment, conveyance, separation) Storage

Affected CSOs:

CSO Name	Annual Base Volume, mg	Annual 1996 Volume, mg	Storm No. 6 1996 Volume, mg	Storm No. 6 Peak Rate, mgd
Ballard Reg.	28.0	1 (4)	0.1 (0.4)	3.5 (5.6)
11th Ave NW		16 (18)	1.5 (1.7)	19.4 (19.9)

*Values in parentheses are with West Point set point at 440 mgd.

Alternative Description:

This alternative involves the diversion of additional flow through the Carkeek treatment plant which will reduce the magnitude of CSOs in Ballard. The resulting storage requirements would be met by providing a 1 million gallon tank at the southeast corner of the intersection of NW 45th and 11th Ave. NW, and a 1 million gallon tank at the southwest corner of the intersection of Shilshole Way and 24th Ave. NW. The 11th Ave. facilities will also include a diversion chamber on 11th Ave. NW, and 30 feet of 10-inch gravity sewer to convey flow into the storage tank. The tank will be equipped with a 0.5 MGD pump station which will pump flow through 60 feet of 8-inch force main into the existing 54-inch sanitary sewer on NW 45th St. Associated structures required for the Shilshole facility will include a regulator station, and 100 feet of 10-inch gravity sewer. This tank will also incorporate a pump station which will pump flow through an approximately 50-foot long, 8-inch force main to an exisitng manhole on Shilshole Way.

Major problems/barriers/issues to be resolved: (e.g., permitting, optimization)

Major issues associated with this alternative include obtaining the site designated for tank construction, and disruption to traffic along NW 45th St and Shilshole Way.

Capital Cost (1994 $): $ 10.1 million (Attach cost summary spreadsheet and detailed cost estimates.)

Briefly describe the alternative's characteristics in each of the following categories:

CATEGORY	CHARACTERISTICS
Impact on Natural Environment	This alternative will affect receiving water quality by reducing the discharge of untreated sanitary sewage to surface water.
Impact on Social Environment	This alternative will result in some traffic disruption along NW 45th St and Shilshole Way.
Impact on Public Health and Safety	Possible slight negative safety impacts due to traffic disruption during construction. Public health impacts equivalent to all other 1-year CSO reduction alternatives.
Fairness and Equity	This alternative will place several underground facilities south of NW 45th St. and at the Shilshole intersection. The land use in this area is predominantly industrial and commercial.
Economic Impacts	The capital cost of this alternative is $10.1 million.
Flexibility	This alternative would not preclude additional CSO reduction through separation or other management alternatives.

CSO Alternative: Carkeek Flow Management/Ballard Storage

Item	Total Cost
Flow regulator structure for 72" interceptor	$321,552
Flow regulator structure for 30" interceptor	$149,996
2-1.0 MG below grade circular storage facility w/0.5 MGD P/S	$3,924,272
130 LF of 10-inch RCP	$24,336
110 LF of 8-inch force main	$37,620
SUBTOTAL	**$4,457,776**
Mobilization/demobilization (10%)	$445,778
Contractor O&P (10%)	$445,778
ESTIMATED CONSTRUCTION COST:	**$5,349,331**
Contingency (30%)	$1,604,799
Sales tax (8.2%)	$570,239
TOTAL ESTIMATED CONSTRUCTION COST:	**$7,524,369**
Design and owner management (35%)	$2,633,529
TOTAL PROJECT COST:	**$10,157,899**

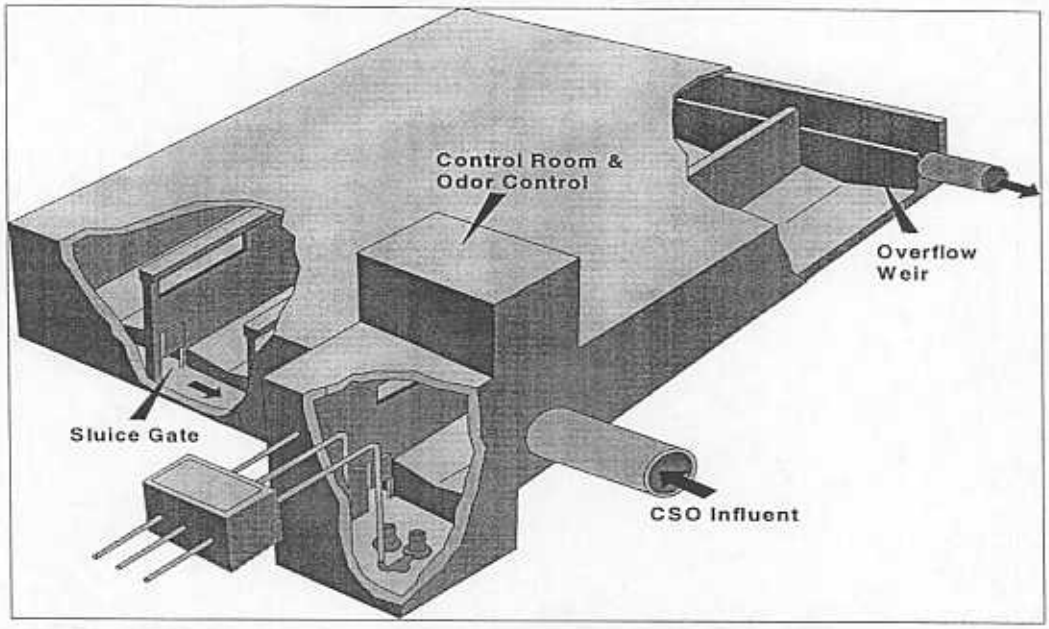

Drainage Basin: NSA **CSO Control Alternative:** Rectangular CSO Trt--Below Grade

Location: University/Montlake

ENR 5630 for estimate **Sizing:** 130.0 mgd 4.6 MG

Item Description	Req'd	Quantity	Unit	Unit Cost	Total Cost
Concrete		11,190	CY	$382.4	$4,279,500
Temporary Sheeting and Shoring		52,100	SF	$11.0	$573,100
Excavation		73,550	CY	$14.0	$1,029,700
Backfill-Native		4,812	CY	$9.0	$43,308
Backfill - Imported		19,248	CY	$29.0	$558,192
Disposal of Excess Excavation		68,738	CY	$10.0	$687,380
Piling	Y	74,400	LF	$16.5	$1,227,600
Sluice Gates		5	EA	$50,000.0	$250,000
Drainage Pumps and Assoc. Mech./Elect. Equip.		1	LS		$131,045
Street Restoration	Y	5,600	SY	$56.5	$316,400
Utility Interference/Relocation	Y	5,600	SY	$25.0	$140,000
Grit Removal	N	0	MGD	$30,000.0	$0
Chem. Feed/Chlorination	Y	130	MGD	$20,400.0	$2,652,000
Specialty Items:					$6,053,818
				Subtotal	**$17,942,043**
Miscellaneous Mechanical/Washdown System		1	LS	5.0%	$897,102
Landscaping		1	LS	10.0%	$1,794,204
Odor Control		1	LS	10.0%	$1,794,204
Traffic Control		1	LS	$50,000	$50,000
Dewatering		1	LS	2.5%	$448,551
Mobilization/Demobilization		1	LS	10.0%	$2,292,610
Contractor's O & P		1	LS	10.0%	$2,292,610
				Subtotal	**$27,511,326**
Contingency				30%	$8,253,398
Sales Tax				8.2%	$2,932,707
		ESTIMATED CONSTRUCTION COST			**$38,697,431**
Design and Owner Management				35%	$13,544,101
Property Acquisition		56000	SF	$17	$952,000
		TOTAL PROJECT COST			**$53,194,000**

CSO Control Alternative: Treatment - Rectangular Primary Sedimentation
Data Input Form and Unit Cost Data Input Form

Input Data In Shaded Cells

Assumptions

Peak Overflow Rate	3200	gpd/SF	**Design Flow**	130 mgd
Cover Depth, ft	5		Over Excavation	
Side Water Depth, ft	15		Bottom	5 ft
Top Slab, ft	1.5		Sides	5 ft
Bottom Slab, ft	3		Wall Thickness	
Freeboard, ft	10		Exterior	2 ft
Length/Width Ratio	3		Interior	1.25 ft
Target Stage Width, ft	25		Tank Width	125 ft
Actual Stage Width, ft	23.3		Tank Length	361 ft
			Excavation Depth	39.5 ft

Calculated Quantities

Comp'td Storage Volume (MG)	Concrete: Base Slab (CY)	Concrete: Walls (CY)	Concrete: Top Slab (CY)	Piles (No.)	Sluice Gates (ea)	Hours Req'd to Drain Tank
4.6	5,040	3,630	2,520	930	5	48

Comp'td Storage Volume (MG)	Excavation (CY)	Backfill (CY)	Backfill Native Mat'l (CY)	Backfill Imported Material (CY)	Haul Excess Material (CY)	Temporary Shoring (SF)	Y Street Restoration (SY)
4.6	73,550	24,060	4,812	19,248	68,738	52,100	5,600

LAND USE CLASSIFICATION WHERE STORAGE IS LOCATED* 1

* 1=Residential, 2=Commercial/Industrial, and 3=Highrise/Downtown Business District

Estimated Costs

ENR Basis 5630

	Quantity	Unit	Unit Cost	Total Cost
Storage Tank Construction				
Concrete - Slab on Grade	5040	CY	$300.0	$1,512,000
Concrete - Walls	3630	CY	$450.0	$1,633,500
Concrete - Elevated Slab	2520	CY	$450.0	$1,134,000
Common Excavation	73,550	CY	$14.0	$1,029,700
Backfill - Imported Material (Including Compaction)	19,248	CY	$29.0	$558,192
Backfill - Native Material (Including Compaction)	4,812	CY	$9.0	$43,308
Disposal of Excess Excavation	68,738	CY	$10.0	$687,380
Trench Support - Soldier Pile/Sheet	52,100	SF	$11.0	$573,100
Street/Surface Restoration				
Removal and Disposal of Asphalt	5,600	SY	$14.5	$81,200
6" Thick Base Course - Mineral Aggregate Type 2	5,600	SY	$5.5	$30,800
Pavement, Cem Conc CL 6 (1-1/2), 12"	0	SY	$0.0	$0
Pavement, Cem Conc CL 6 (1-1/2), 8" w/ 2" Asphalt Wearing Course	5,600	SY	$36.5	$204,400
Pumps, Associated Piping and Mechical/Electrical Equipment				
Pumps and Associated Piping	2.28	MGD		$87,656
Misc. Mechanical Equipment	1	LS	30.0%	$26,297
Electrical Systems	1	LS	15.0%	$17,093
Specialty Items - Description				
Forcemain--72 inch	1000	FT	$1,415.0	$1,415,000
Effluent Pump Station	130	MGD		$4,638,818
Regulator	0	LS	$310,000	$0
Hnad railing and cover	0	SF	$0.0	$0

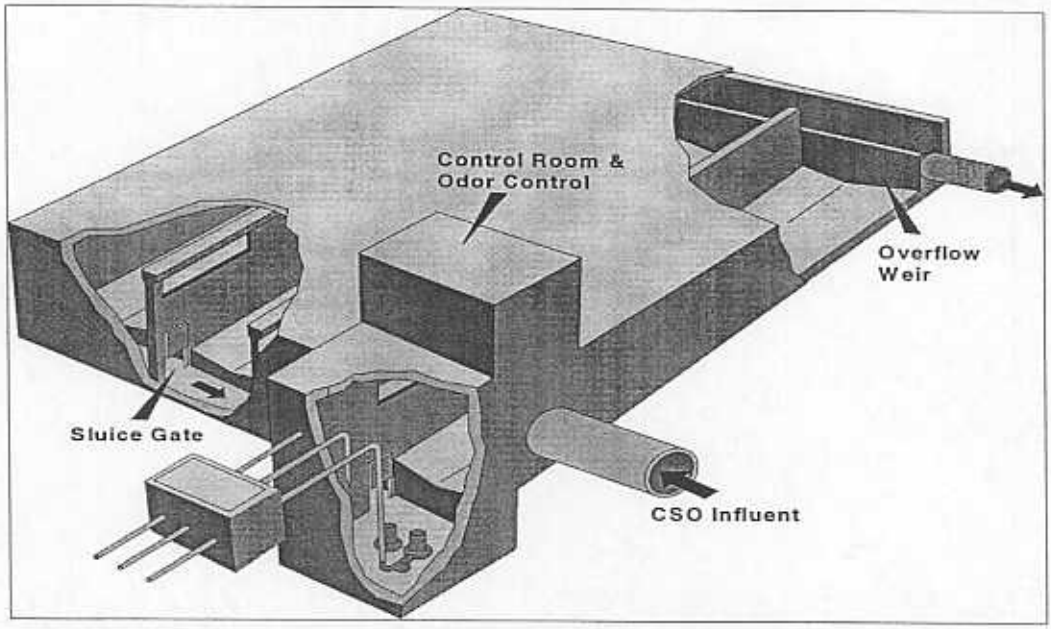

Drainage Basin: North Interceptor Below Grade
CSO Control Alternative: Rectangular Primary Sedimentation
Location: 3rd Ave. West
ENR 5630 for estimate
Sizing: 30.0 mgd 1.2 MG

Item Description	Req'd	Quantity	Unit	Unit Cost	Total Cost
Concrete		3,020	CY	$382.0	$1,153,500
Temporary Sheeting and Shoring		22,100	SF	$11.0	$243,100
Excavation		17,140	CY	$14.0	$239,960
Backfill-Native		1,518	CY	$9.0	$13,662
Backfill - Imported		6,072	CY	$29.0	$176,088
Disposal of Excess Excavation		15,622	CY	$10.0	$156,220
Piling	Y	20,800	LF	$16.5	$343,200
Sluice Gates		3	EA	$50,000.0	$150,000
Drainage Pumps and Assoc. Mech./Elect. Equip.		1	LS		$91,571
Street Restoration	Y	1,700	SY	$56.5	$96,050
Utility Interference/Relocation	Y	1,700	SY	$25.0	$42,500
Grit Removal	N	0	MGD	$30,000.0	$0
Chem. Feed/Chlorination	Y	30	MGD	$20,400.0	$612,000
Specialty Items:					$1,109,422
				Subtotal	**$4,427,272**
Miscellaneous Mechanical/Washdown System		1	LS	5.0%	$221,364
Landscaping		1	LS	5.0%	$221,364
Odor Control		1	LS	10.0%	$442,727
Traffic Control		1	LS	$50,000	$50,000
Dewatering		1	LS	2.5%	$110,682
Mobilization/Demobilization		1	LS	10.0%	$547,341
Contractor's O & P		1	LS	10.0%	$547,341
				Subtotal	**$6,568,090**
Contingency				30%	$1,970,427
Sales Tax				8.2%	$700,158
		ESTIMATED CONSTRUCTION COST			**$9,238,676**
Design and Owner Management				35%	$3,233,537
Property Acquisition		17000	SF	$17	$289,000
		TOTAL PROJECT COST			**$12,762,000**

CSO Control Alternative: Treatment - Rectangular Primary Sedimentation
Data Input Form and Unit Cost Data Input Form

Below Grade

Input Data In Shaded Cells

Assumptions

Peak Overflow Rate	2900	gpd/SF	**Design Flow**	30	mgd
Cover Depth, ft	5		Over Excavation		
Side Water Depth, ft	15		Bottom	5	ft
Top Slab, ft	1.5		Sides	5	ft
Bottom Slab, ft	3		Wall Thickness		
Freeboard, ft	1.5		Exterior	2	ft
Length/Width Ratio	3		Interior	1.25	ft
Target Stage Width, ft	25		Tank Width	65	ft
Actual Stage Width, ft	19.6		Tank Length	188	ft
			Excavation Depth	31	ft

Calculated Quantities

Comp'td Storage Volume (MG)	Concrete: Base Slab (CY)	Concrete: Walls (CY)	Concrete: Top Slab (CY)	Piles (No.)	Sluice Gates (ea)	Hours Req'd to Drain Tank
1.2	1,370	960	690	260	3	24

Comp'td Storage Volume (MG)	Excavation (CY)	Backfill (CY)	Backfill Native Mat'l (CY)	Backfill Imported Material (CY)	Haul Excess Material (CY)	Temporary Shoring (SF)	Street Restoration (SY)
1.2	17,140	7,590	1,518	6,072	15,622	22,100	1,700

LAND USE CLASSIFICATION WHERE STORAGE IS LOCATED* 1

* 1=Residential, 2=Commercial/Industrial, and 3=Highrise/Downtown Business District

Estimated Costs

ENR Basis 5630

	Quantity	Unit	Unit Cost	Total Cost
Storage Tank Construction				
Concrete - Slab on Grade	1370	CY	$300.0	$411,000
Concrete - Walls	960	CY	$450.0	$432,000
Concrete - Elevated Slab	690	CY	$450.0	$310,500
Common Excavation	17,140	CY	$14.0	$239,960
Backfill - Imported Material (Including Compaction)	6,072	CY	$29.0	$176,088
Backfill - Native Material (Including Compaction)	1,518	CY	$9.0	$13,662
Disposal of Excess Excavation	15,622	CY	$10.0	$156,220
Trench Support - Soldier Pile/Sheet	22,100	SF	$11.0	$243,100
Street/Surface Restoration				
Removal and Disposal of Asphalt	1,700	SY	$14.5	$24,650
6" Thick Base Course - Mineral Aggregate Type 2	1,700	SY	$5.5	$9,350
Pavement, Cem Conc CL 6 (1-1/2), 12"	0	SY	$0.0	$0
Pavement, Cem Conc CL 6 (1-1/2), 8" w/ 2" Asphalt Wearing Course	1,700	SY	$36.5	$62,050
Pumps, Associated Piping and Mechical/Electrical Equipment				
Pumps and Associated Piping	1.16	MGD		$61,251
Misc. Mechanical Equipment	1	LS	30.0%	$18,375
Electrical Systems	1	LS	15.0%	$11,944
Specialty Items - Description				
Forcemain--72 inch (Size 72 inch)		FT	$1,415.0	$0
Influent Pump Station	30.0	MGD		$1,109,422
Regulator		LS	$310,000	$0
Hnad railing and cover	0	LF	$25.4	$0

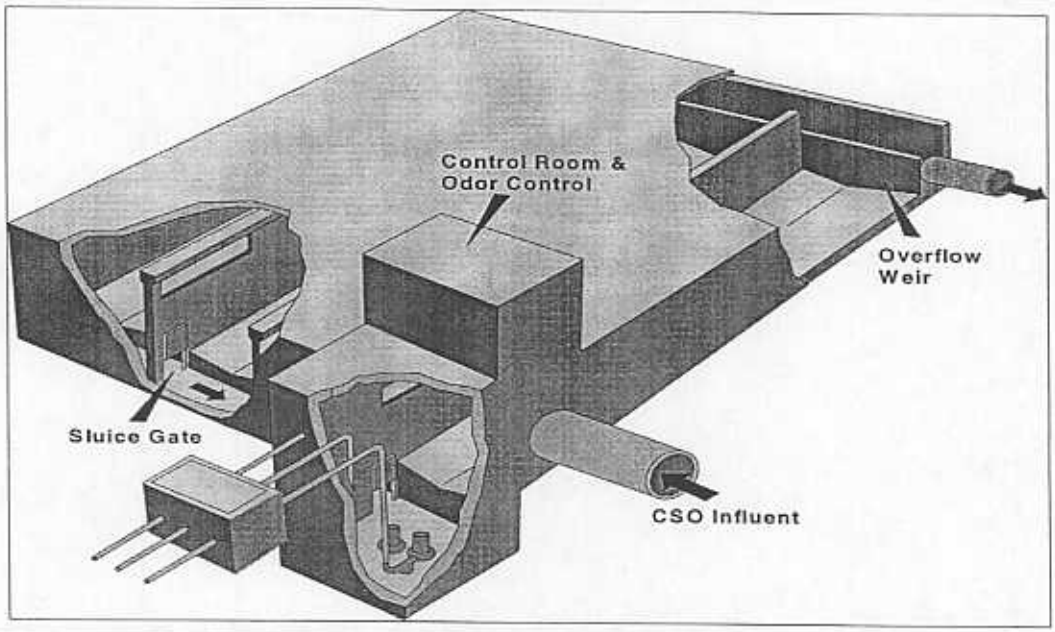

Drainage Basin: North Interceptor **CSO Control Alternative:** Rectangular Primary Sedimentation

Below Grade **Location:** 11th Ave. NW

ENR 5630 for estimate **Sizing:** 20.0 mgd 0.6 MG

Item Description	Req'd	Quantity	Unit	Unit Cost	Total Cost
Concrete		1,630	CY	$386.5	$630,000
Temporary Sheeting and Shoring		16,200	SF	$11.0	$178,200
Excavation		9,320	CY	$14.0	$130,480
Backfill-Native		900	CY	$9.0	$8,100
Backfill - Imported		3,600	CY	$29.0	$104,400
Disposal of Excess Excavation		8,420	CY	$10.0	$84,200
Piling	Y	10,400	LF	$16.5	$171,600
Sluice Gates		2	EA	$50,000.0	$100,000
Drainage Pumps and Assoc. Mech./Elect. Equip.		1	LS		$70,404
Street Restoration	Y	1,000	SY	$60.0	$60,000
Utility Interference/Relocation	Y	1,000	SY	$100.0	$100,000
Grit Removal	N	0	MGD	$30,000.0	$0
Chem. Feed/Chlorination	Y	20	MGD	$20,400.0	$408,000
Specialty Items:					$756,482
				Subtotal	**$2,801,866**
Miscellaneous Mechanical/Washdown System		1	LS	5.0%	$140,093
Landscaping		1	LS	2.5%	$70,047
Odor Control		1	LS	10.0%	$280,187
Traffic Control		1	LS	$50,000	$50,000
Dewatering		1	LS	2.5%	$70,047
Mobilization/Demobilization		1	LS	10.0%	$341,224
Contractor's O & P		1	LS	10.0%	$341,224
				Subtotal	**$4,094,687**
Contingency				30%	$1,228,406
Sales Tax				8.2%	$436,494
	ESTIMATED CONSTRUCTION COST				**$5,759,587**
Design and Owner Management				35%	$2,015,855
Property Acquisition		9000	SF	$17	$153,000
	TOTAL PROJECT COST				**$7,930,000**

CSO Control Alternative: Treatment - Rectangular Primary Sedimentation
Data Input Form and Unit Cost Data Input Form

Below Grade

Input Data In Shaded Cells

Assumptions

Peak Overflow Rate	4000	gpd/SF	**Design Flow**	20	mgd
Cover Depth, ft	5		Over Excavation		
Side Water Depth, ft	15		Bottom	5	ft
Top Slab, ft	1.5		Sides	5	ft
Bottom Slab, ft	3		Wall Thickness		
Freeboard, ft	1.5		Exterior	2	ft
Length/Width Ratio	3		Interior	1.25	ft
Target Stage Width, ft	25		Tank Width	46	ft
Actual Stage Width, ft	20.4		Tank Length	135	ft
			Excavation Depth	31	ft

Calculated Quantities

Comp'td Storage Volume (MG)	Concrete: Base Slab (CY)	Concrete: Walls (CY)	Concrete: Top Slab (CY)	Piles (No.)	Sluice Gates (ea)	Hours Req'd to Drain Tank
0.6	690	590	350	130	2	24

Comp'td Storage Volume (MG)	Excavation (CY)	Backfill (CY)	Backfill Native Mat'l (CY)	Backfill Imported Material (CY)	Haul Excess Material (CY)	Temporary Shoring (SF)	Street Restoration (SY)
0.6	9,320	4,500	900	3,600	8,420	16,200	1,000

LAND USE CLASSIFICATION WHERE STORAGE IS LOCATED* 2

* 1=Residential, 2=Commercial/Industrial, and 3=Highrise/Downtown Business District

Estimated Costs

ENR Basis 5630

	Quantity	Unit	Unit Cost	Total Cost
Storage Tank Construction				
Concrete - Slab on Grade	690	CY	$300.0	$207,000
Concrete - Walls	590	CY	$450.0	$265,500
Concrete - Elevated Slab	350	CY	$450.0	$157,500
Common Excavation	9,320	CY	$14.0	$130,480
Backfill - Imported Material (Including Compaction)	3,600	CY	$29.0	$104,400
Backfill - Native Material (Including Compaction)	900	CY	$9.0	$8,100
Disposal of Excess Excavation	8,420	CY	$10.0	$84,200
Trench Support - Soldier Pile/Sheet	16,200	SF	$11.0	$178,200
Street/Surface Restoration				
Removal and Disposal of Asphalt	1,000	SY	$14.5	$14,500
6" Thick Base Course - Mineral Aggregate Type 2	1,000	SY	$5.5	$5,500
Pavement, Cem Conc CL 6 (1-1/2), 12"	1,000	SY	$40.0	$40,000
Pavement, Cem Conc CL 6 (1-1/2), 8" w/ 2" Asphalt Wearing Course	0	SY	$0.0	$0
Pumps, Associated Piping and Mechical/Electrical Equipment				
Pumps and Associated Piping	0.56	MGD		$47,093
Misc. Mechanical Equipment	1	LS	30.0%	$14,128
Electrical Systems	1	LS	15.0%	$9,183
Specialty Items - Description				
Forcemain--72 inch (Size 72 inch)	0	FT	$1,415.0	$0
Influent Pump Station	20.0	MGD		$756,482
Regulator	0	LS	$732,000	$0
Head railing and cover	0	LF	$26.2	$0

METRO CSO 5-YEAR UPDATE
ALTERNATIVE INFORMATION SUMMARY

Alternative Name: University/Montlake Separation

Alternative Type: (e.g., treatment, conveyance, separation) Separation

Affected CSOs:

CSO Name	Annual Base Volume, mg	Annual 1996 Volume, mg	Storm No. 6 1996 Volume, mg	Storm No. 6 Peak Rate, mgd
University/ Montlake	62.0	52.0 (62.0)	6.5 (7.4)	151.1 (153.3)

*Values in parentheses are with West Point set point at 440 mgd.

Alternative Description:

The separation option would consist of the partial separation of the residential areas surrounding Green Lake, the University of Washington, and Montlake.

The stormwater from the basins in the vicinity of Green Lake and the University of Washington, which comprise a total of 2,258 acres, would discharge directly to Lake Washington via a newly constructed outfall.

In order to divert the approximately 1.5 million gallons of remaining CSO from University, after separation, an underground storage facility would be constructed north of the Ship Canal and east of the Montlake Bridge on University of Washington property. Overflows occurring at the existing University regulatory station will be conveyed by gravity to the tank. The flow in the tank will be pumped back up to the interceptor after storm flows within the system have subsided.

Separate storm drains have already by constructed in an 191-acre area within Montlake; however, the collected flows are still being diverted to the sewer system. This alternative would involve the construction of an 8-foot diameter tunnel to convey flows from the area of the University of Washington arboretum, down Harrison Street, and through an outfall, into Lake Washington.

Major problems/barriers/issues to be resolved: (e.g., permitting, optimization)

Major issues associated with this alternative include disruption to traffic, the shoreline permits associated with outfall construction, and NPDES permitting for discharge to receiving waters.

Capital Cost (1994 $): $ 302.2 million (Attach cost summary spreadsheet and detailed cost estimates.)

Briefly describe the alternative's characteristics in each of the following categories:

CATEGORY	CHARACTERISTICS
Impact on Natural Environment	This alternative will affect receiving water quality by reducing the discharge of sanitary sewage to surface water and possibly increasing the discharge loadings of some metals and hydrocarbons.
Impact on Social Environment	This alternative will result in some traffic and neighborhood disruption on area streets during construction.
Impact on Public Health and Safety	Possible slight negative safety impacts due to traffic interferences during construction. Public health impacts equivalent to all other 1-year CSO reduction alternatives.
Fairness and Equity	Perceived negative effects will be temporary, during construction.
Economic Impacts	The capital cost of this alternative is $302.2 million.
Flexibility	This alternative provides flexibility for the future diversion of CSOs.

CSO Alternative: University/Montlake Separation

Item	Total Cost
Separate 2,258 acres	$99,092,000
Ship canal outfall(s)	$21,800,000
1.5 MG below grade circular storage Facility with 0.75 MGD PS	$2,100,000
800 LF of 18-inch RCP-12 ft average invert depth	$240,000
800 LF of 12-inch Force main-12 ft to 36 ft average invert depth	$273,00
CSO control structure	$322,000
2,640 foot 8-ft diameter tunnel-Harrison St	$5,909,000
1,000 foot 8-ft diameter outfall in Lake Washington	$2,880,000
SUBTOTAL	**$132,616,000**
Mobilization/demobilization (10%)	$13,262,000
Contractor O&P (10%)	$13,262,000
ESTIMATED CONSTRUCTION COST:	**$159,140,000**
Contingency (30%)	$47,742,000
Sales tax (8.2%)	$16,964,000
TOTAL ESTIMATED CONSTRUCTION COST:	**$223,846,000**
Design and owner management (35%)	$78,346,000
TOTAL PROJECT COST:	**$302,193,000**

*Source: Based on detailed cost analysis performed to determine separation cost per acre of residential area in Ballard basin.

APPENDIX D

Alki Basin
CSO Control Alternatives

Separation
Offline Storage
Offline Storage with Pump Station
Parallel Conveyance System

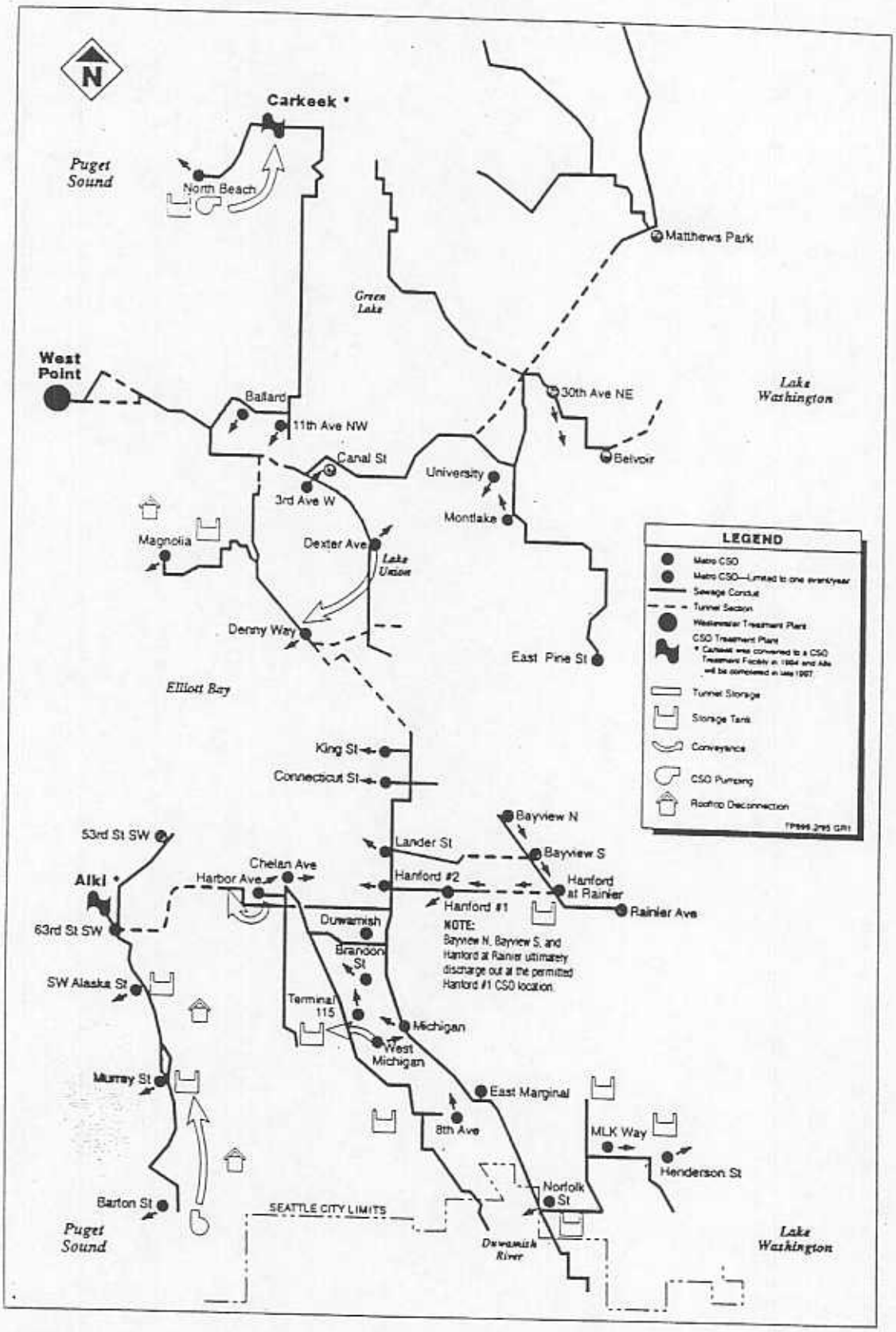

Figure 2. Group 1 projects: constant projects that do not change with WW2020+

METRO CSO 5-YEAR UPDATE
ALTERNATIVE INFORMATION SUMMARY

Alternative Name: Alki Separation

Alternative Type: (e.g., treatment, conveyance, separation) Separation

Affected CSOs:

CSO Name	Annual Base Volume, mg	Annual 1996 Volume, mg	Storm No. 6 1996 Volume, mg	Storm No. 6 Peak Rate, mgd
Murray PS	5.0	5.0 (5.0)	0.6 (0.6)	10.1 (1.1)
Barton PS	7.0	7.0 (7.0)	0.6 (0.6)	13.0 (14.2)
Alki Beach Dr	12.0	12.0 (12.0)	0.7 (0.7)	10.1 (10.1)

*Values in parentheses are with West Point set point at 440 mgd.

Alternative Description:

This alternative would provide partial separation of the Barton Pump Station drainage area, which contains approximately 143 acres of unseparated area south of the Seattle city limit. Partial separation of this area would be combined with separation of a portion of the tributary area lying along 35th Ave. S.W. The total area to be partially separated consists of 150 acres.

Major problems/barriers/issues to be resolved: (e.g., permitting, optimization)

Major issues associated with this alternative include disruption to traffic during construction.

Capital Cost (1994 $): $15 million (Attach cost summary spreadsheet and detailed cost estimates.)

Briefly describe the alternative's characteristics in each of the following categories:

CATEGORY	CHARACTERISTICS
Impact on Natural Environment	This alternative will affect receiving water quality by reducing the discharge of sanitary sewage to surface water and possibly increasing the discharge loadings of some metals and hydrocarbons.
Impact on Social Environment	This alternative will result in some traffic and neighborhood disruption on area streets during construction.
Impact on Public Health and Safety	Possible slight negative safety impacts due to construction. Public health impacts equivalent to all other 1-year CSO reduction alternatives.
Fairness and Equity	Perceived negative effects will be temporary, during construction.
Economic Impacts	The capital cost of this alternative is $15 million.
Flexibility	This alternative does not preclude additional CSO control by alternative means.

CSO Alternative: Alki Separation

Item	Total Cost
Separate 150 acres*	$6,583,000
Mobilization/demobilization (10%)	$658,000
Contractor O&P (10%)	$658,000
ESTIMATED CONSTRUCTION COST:	**$7,900,000**
Contingency (30%)	$2,370,000
Sales tax (8.2%)	$841,000
TOTAL ESTIMATED CONSTRUCTION COST:	**$11,111,000**
Design and owner management (35%)	$3,889,000
TOTAL PROJECT COST:	**$15,000,000**

*Source: Based on detailed cost analysis performed to determine separation cost per acre of residential area in Ballard basin.

SUMMARY OF ALTERNATIVES
ALKI/WEST SEATTLE BASIN
Revision Date: 6/2/94

Alternative: West Seattle Off-Line Storage
KCM

Component	Project Cost	Spreadsheet Name
CSO Control Stucture for Off-Line Storage	$732,718	CSOCNTRL.XLS
CSO Control Stucture for Off-Line Storage	$732,718	CSOCNTRL.XLS
0.5 MG Circular Storage Facility (Barton CSO) - No Pump Station, No Piles	$2,526,209	ACSTO1.XLS
800 LF of 24-inch RCP (Cut and Cover) - 15' Average Invert Depth	$1,845,968	ASEWR1.XLS
1.0 MG Circular Storage Facility (Murray & Alki Beach CSO)-No Pump Station, No Piles	$4,239,514	ACSTO2.XLS
500 LF of 24-inch RCP (Cut and Cover) - 15' Average Invert Depth	$1,614,225	ASEWR2.XLS
Total Alternative Cost:	**$11,691,352**	

METRO CSO 5-YEAR UPDATE
ALTERNATIVE INFORMATION SUMMARY

Alternative Name: West Seattle Off-Line Storage

Alternative type: (e.g., treatment, conveyance, separation) Off-Line Storage

Affected CSOs:

CSO Name	Annual Base Volume, mg	Annual 1996 Volume, mg	Storm No. 6 1996 Volume, mg	Storm No. 6 Peak Rate, mgd
Barton	7	7 (7)	0.6 (0.6)	13.0 (14.2)
Murray	5	5 (5)	0.6 (0.6)	10.1 (1.1)
Alki Beach Drive	12	12 (12)	0.7 (0.7)	10.1 (10.1)

*Values in parentheses are with West Point set point at 440 mgd.

Alternative Description:

Alternative includes two off-line storage facilities with a total volume of 1.5 MG for the CSOs listed above. The two facilities with this alternative will fill by gravity and drain by gravity when excess capacity exists in the system.

A 0.5 MG off-line storage facility will be located east of Fauntleroy Cove beneath the relatively level school grounds for Fauntleroy School. This facility will require approximately 800-feet of 24-inch RCP to connect with existing sewers for filling and emptying the storage facility.

A 1.0 MG off-line storage facility will be located east of 48th Avenue SW about a 1/4 mile up the hill from Lowman Beach Park. This facility will require approximately 500-feet of 24-inch RCP to connect with existing sewers for filling and emptying the storage facility.

The location of these two facilities are in close proximity to major collection sewers that sewer the areas. By taking the peak flows out of the system at these locations during large storm events, additional capacity will be available in the system to avoid the CSO event.

Major problems/barriers/issues to be resolved: (e.g., permitting, optimization)

Major problems associated with these facilities are acquiring the required sites for construction.

Capital Cost (1994 $): $12 million (Attach cost summary spreadsheet and detailed cost estimates.)

Briefly describe the alternative's characteristics in each of the following categories:

CATEGORY	CHARACTERISTICS
Impact on Natural Environment	This alternative will generate approximately 10,000 CY of spoils to be disposed of. Receiving water quality will be affected by the reduction of the discharge of untreated sanitary sewage to surface waters.
Impact on Social Environment	This alternative will cause local traffic disruption in the neighborhoods. The storage tanks may generate some odors if odor control facilities are not operating properly.
Impact on Public Health and Safety	The additional construction traffic in the neighborhoods will cause some increased safety risks. Unauthorized entry into storage facilities after completion is an additional safety risk. Public health will be positively impacted by this alternative by reducing occurrence of the Barton, Murray and Alki beach Drive CSOs.
Fairness and Equity	This alternative will likely generate perceived negative impact to the residents in the immediate vicinity of these facilities. The perceived negative impact may be compounded by the fact that one of the storage facilities is located adjacent to the Fauntleroy School.
Economic Impacts	This alternative is estimated to cost $12 million in capital costs to meet the design criteria for the Barton, Murray and Alki Beach Drive CSOs.
Flexibility	Additional facilities could be added as needed in the future if additional storage were desired.
Degree of Conformance with Growth Management Act	N/A

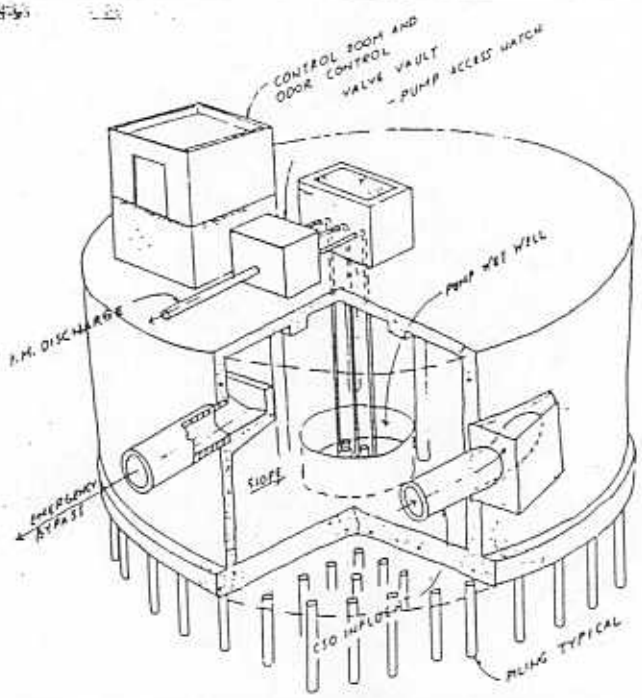

Drainage Basin: ALKI (West Seattle) **CSO Control Element:** 0.5 MG Circular Storage Facility (Barton CSO)

Revised: 4/29/94 **Alternative Description:** West Seattle Off-Line Storage

Item Description	Quant.	Unit	Unit Cost	Total Cost
Concrete	896	CY	$370	$331,520
Temporary Sheeting and Shoring	12,900	SF	$11.0	$141,900
Excavation	8,564	CY	$14.0	$119,891
Backfill - Native	1,048	CY	$9.0	$9,432
Backfill - Imported	4,192	CY	$29.0	$121,565
Disposal of Excess Excavation	7,516	CY	$10.0	$75,160
Piling	0	LF	$16.5	$0
Street Restoration	658	SY	$56.5	$37,177
Utility Interference/Relocation	658	SY	$100	$65,800
Pumps, Associated Piping and Mechanical Equipment	0	LS	$0	$0
			SUBTOTAL:	**$902,445**
Aeration (3%)	1	LS	$27,073	$27,073
Mechanical Washdown System (5%)	1	LS	$45,122	$45,122
Odor Control (5%)	1	LS	$45,122	$45,122
Traffic Control	1	LS	$50,000	$50,000
Dewatering (2.5%)	1	LS	$22,561	$22,561
Mobilization/Demobilization (10%)	1	LS	$109,232	$109,232
Contractor's O & P (10%)	1	LS	$109,232	$109,232
ESTIMATED CONSTRUCTION COST:				**$1,310,788**
Contingency (On Estimated Construction Cost)			30%	$393,236
Sales Tax (On Construction Cost and Contingency)			8.2%	$139,730
TOTAL ESTIMATED CONSTRUCTION COST:				**$1,843,755**
Design and Owner Management			35%	$645,314
Property Acquisition (Inc. 30% Contingency & 15% Management)	3,714	SF	$10	$37,140
TOTAL PROJECT COST:				**$2,526,209**

NCSTDI.XLS

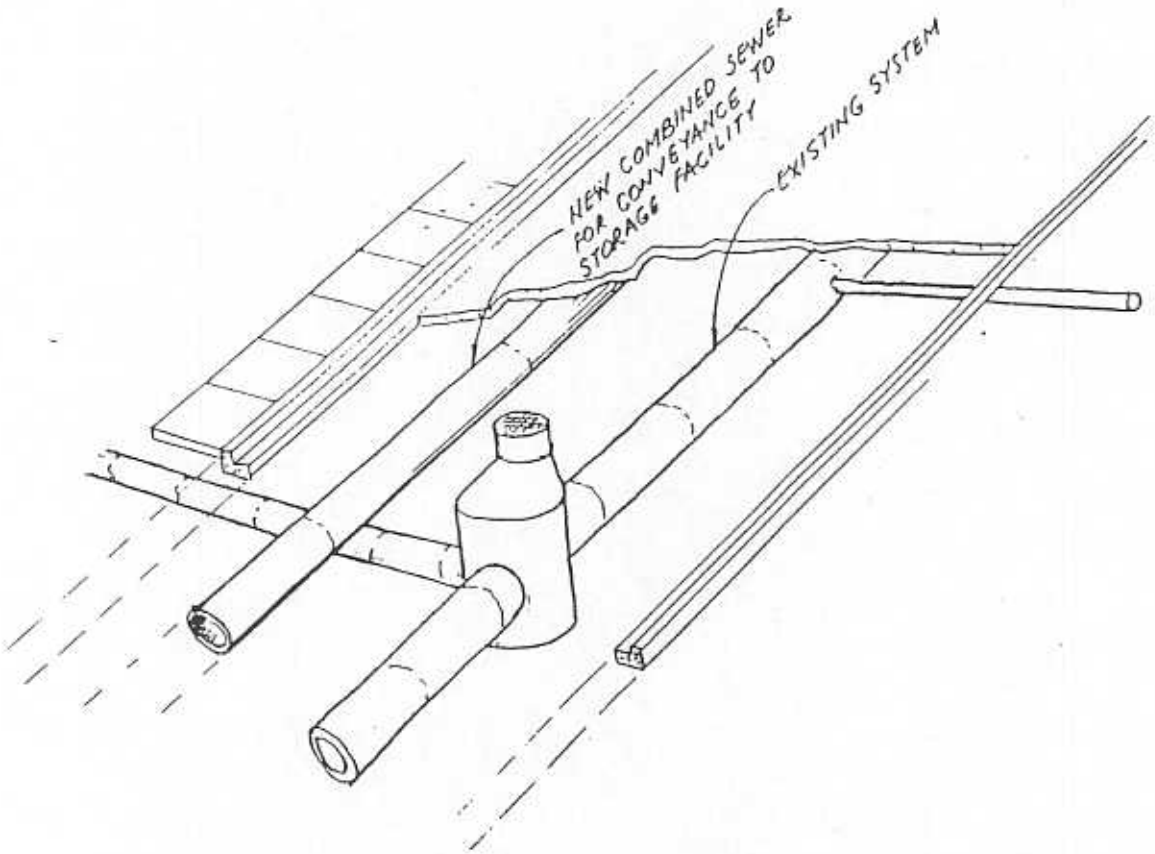

Drainage Basin: Alki (West Seattle) **CSO Control Element:** 800 LF of 24-inch RCP (Cut and Cover) - 15' Deep

Revised: 4/29/94 **Alternative Description:** West Seattle Off-Line Storage

Item Description	Quant.	Unit	Unit Cost	Total Cost
24 -Inch Diameter RCP	800	LF	$227.0	$181,600
-Inch Diameter RCP		LF		$0
-Inch Diameter RCP		LF		$0
-Inch Diameter RCP		LF		$0
Street Restoration	1,600	SY	$56.0	$89,600
72-Inch Diameter RCP, Jacked Pipe	200	LF	$957.0	$191,400
36-Inch Diameter RCP, Microtunneled	500	LF	$695.0	$347,500
			SUBTOTAL:	**$810,100**
Mobilization/Demobilization (10%)	1	LS	$81,010.0	$81,010
Contractor's O & P (10%)	1	LS	$81,010.0	$81,010
		ESTIMATED CONSTRUCTION COST:		**$972,120**
		Contingency (On Estimated Construction Cost)	30%	$291,636
		Sales Tax (On Construction Cost and Contingency)	8.2%	$103,628
		TOTAL ESTIMATED CONSTRUCTION COST:		**$1,367,384**
		Design and Owner Management	35%	$478,584
		TOTAL PROJECT COST:		**$1,845,968**

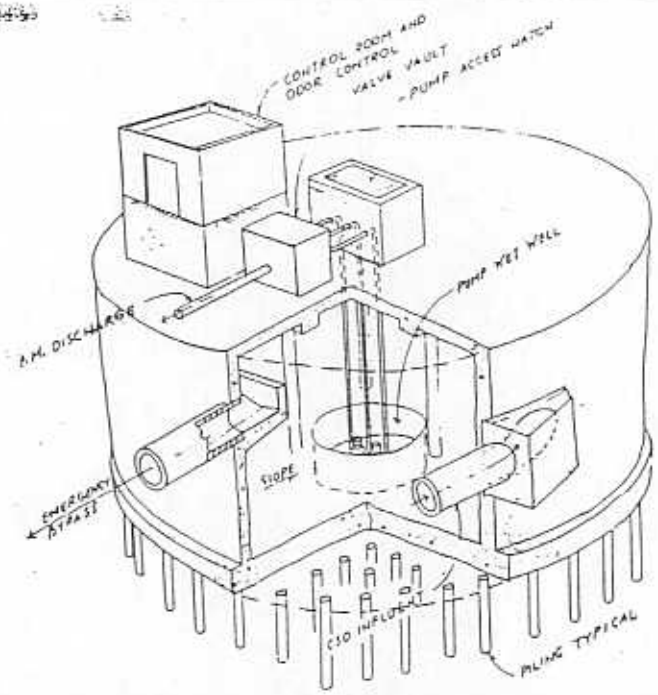

Drainage Basin: ALKI (West Seattle) **CSO Control Element:** 1.0 MG Circular Storage Facility (Murray & Alki Beach CSO)

Revised: 4/29/94 **Alternative Description:** West Seattle Off-Line Storage

Item Description	Quant.	Unit	Unit Cost	Total Cost
Concrete	1,633	CY	$370	$604,210
Temporary Sheeting and Shoring	17,100	SF	$11.0	$188,100
Excavation	15,241	CY	$14.0	$213,375
Backfill - Native	1,746	CY	$9.0	$15,713
Backfill - Imported	6,984	CY	$29.0	$202,524
Disposal of Excess Excavation	13,495	CY	$10.0	$134,950
Piling	0	LF	$16.5	$0
Street Restoration	1,153	SY	$56.5	$65,145
Utility Interference/Relocation	1,153	SY	$100	$115,300
Pumps, Associated Piping and Mechanical Equipment	0	LS	$0	$0
			SUBTOTAL:	**$1,539,316**
Aeration (3%)	1	LS	$46,179	$46,179
Mechanical Washdown System (5%)	1	LS	$76,966	$76,966
Odor Control (5%)	1	LS	$76,966	$76,966
Traffic Control	1	LS	$50,000	$50,000
Dewatering (2.5%)	1	LS	$38,483	$38,483
Mobilization/Demobilization (10%)	1	LS	$182,791	$182,791
Contractor's O & P (10%)	1	LS	$182,791	$182,791
ESTIMATED CONSTRUCTION COST:				**$2,193,492**
Contingency (On Estimated Construction Cost)			30%	$658,048
Sales Tax (On Construction Cost and Contingency)			8.2%	$233,826
TOTAL ESTIMATED CONSTRUCTION COST:				**$3,085,366**
Design and Owner Management			35%	$1,079,878
Property Acquisition (Inc. 30% Contingency & 15% Management)	7,427	SF	$10	$74,270
TOTAL PROJECT COST:				**$4,239,514**

ACST00.XLS

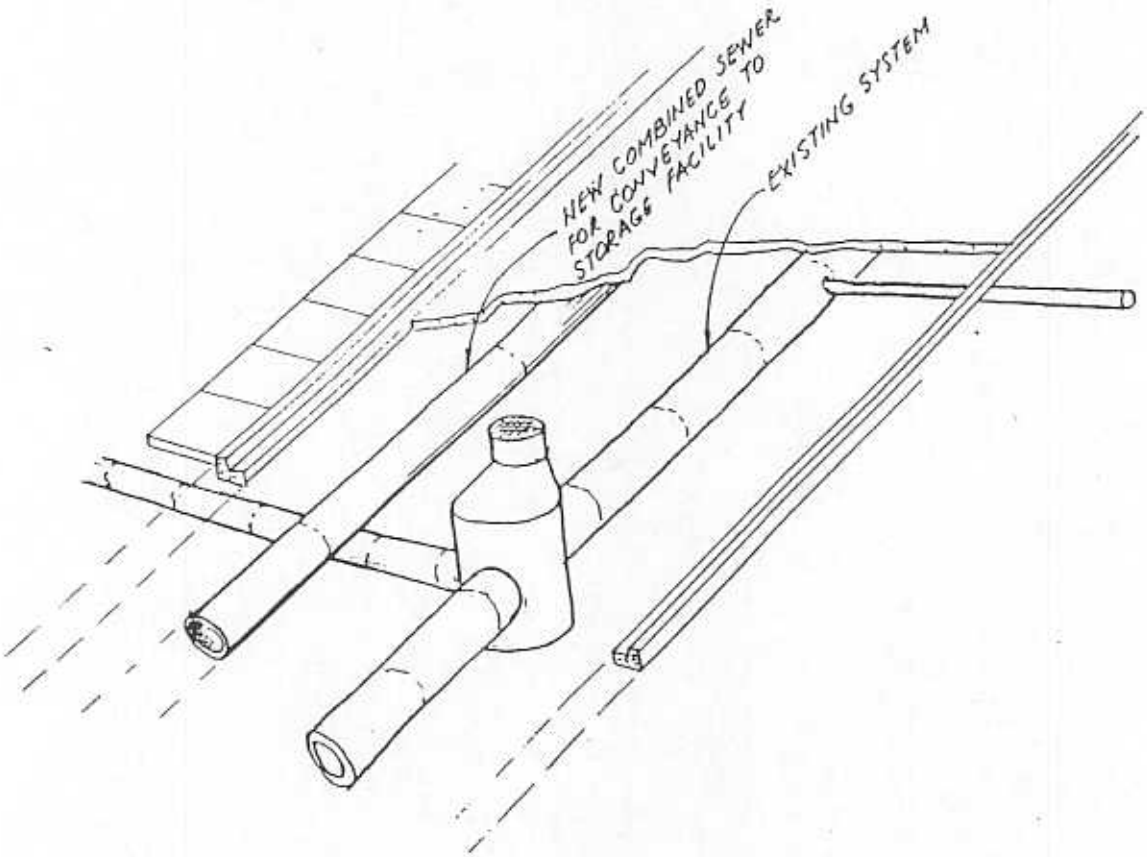

Drainage Basin: Alki (West Seattle) **CSO Control Element:** 500 LF of 24-inch RCP (Cut and Cover) - 15' Deep

Revised: 4/29/94 **Alternative Description:** West Seattle Off-Line Storage

Item Description	Quant.	Unit	Unit Cost	Total Cost
24 -Inch Diameter RCP	500	LF	$227.0	$113,500
-Inch Diameter RCP		LF		$0
-Inch Diameter RCP		LF		$0
-Inch Diameter RCP		LF		$0
Street Restoration	1,000	SY	$56.0	$56,000
72-inch Diameter RCP, Jacked Pipe	200	LF	$957.0	$191,400
36-inch Diameter RCP, Microtunneled	500	LF	$695.0	$347,500
			SUBTOTAL:	**$708,400**
Mobilization/Demobilization (10%)	1	LS	$70,840.0	$70,840
Contractor's O & P (10%)	1	LS	$70,840.0	$70,840
		ESTIMATED CONSTRUCTION COST:		**$850,080**
		Contingency (On Estimated Construction Cost)	30%	$255,024
		Sales Tax (On Construction Cost and Contingency)	8.2%	$90,619
		TOTAL ESTIMATED CONSTRUCTION COST:		**$1,195,723**
		Design and Owner Management	35%	$418,503
		TOTAL PROJECT COST:		**$1,614,225**

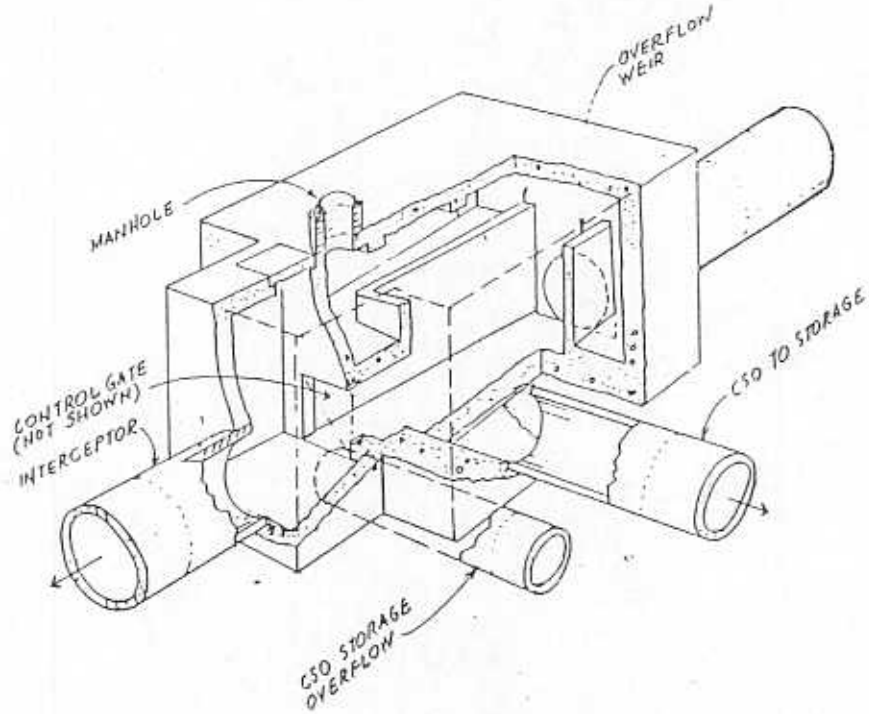

Drainage Basin: Alki (West Seattle) **CSO Control Element:** CSO Control Structure for Off-Line Storage Facility

Revised: 4/29/94 **Alternative Description:** Common to All Alternatives

Item Description	Quant.	Unit	Unit Cost	Total Cost
Concrete	151	CY	$400.0	$60,400
Temporary Sheeting and Shoring	4,255	SF	$11.0	$46,805
Excavation	948	CY	$14.0	$13,272
Backfill-Native	104	CY	$9.0	$936
Backfill - Imported	416	CY	$29.0	$12,064
Disposal of Excess Excavation	844	CY	$10.0	$8,440
Sluice Gates	1	EA	$75,000	$75,000
Street Restoration	118	SY	$60.0	$7,084
Demolish Existing Interceptor/Construct Temporary Bypass	1	LS	$27,902	$27,902
Traffic Control	1	LS	$50,000	$50,000
Utility Interference/Relocation	118	SY	$100.0	$11,806
Dewatering (2.5%)	1	LS	$7,843	$7,843
			SUBTOTAL:	**$321,552**
Mobilization/Demobilization (10%)	1	LS	$32,155	$32,155
Contractor's O & P (10%)	1	LS	$32,155	$32,155
			ESTIMATED CONSTRUCTION COST:	**$385,862**
			Contingency (On Estimated Construction Cost) 30%	$115,759
			Sales Tax (On Construction Cost and Contingency) 8.2%	$41,133
			TOTAL ESTIMATED CONSTRUCTION COST:	**$542,754**
			Design and Owner Management 35%	$189,964
			TOTAL PROJECT COST:	**$732,718**

SUMMARY OF ALTERNATIVES
ALKI/WEST SEATTLE BASIN
Revision Date: 6/2/94

Alternative: West Seattle Off-Line Storage With Pump Station
KCM

Component	Project Cost	Spreadsheet Name
CSO Control Stucture for Off-Line Storage	$732,718	CSOCNTRL.XLS
CSO Control Stucture for Off-Line Storage	$732,718	CSOCNTRL.XLS
CSO Control Stucture for Off-Line Storage	$732,718	CSOCNTRL.XLS
7.5 MGD Pump Station (45' TDH)	$1,392,863	ALFPS1.XLS
0.07 MG Below Grade Circular Storage Facility - No Pump Station, No Piles	$797,432	ACSTO3.XLS
7,400 LF of 24-inch Force Main - 5' Average Invert Depth	$5,345,356	AFMAI1.XLS
0.8 MG Below Grade Circular Storage Facility - 0.40 MGD Pump Station, No Piles	$3,738,863	ACSTO4.XLS
0.60 MG Below Grade Circular Storage Facility - 0.30 MGD Pump Station, No Piles	$3,039,371	ACSTO5.XLS
Total Alternative Cost:	**$16,512,039**	

METRO CSO 5-YEAR UPDATE
ALTERNATIVE INFORMATION SUMMARY

Alternative Name: West Seattle Off-Line Storage with Pump Station

Alternative type: (e.g., treatment, conveyance, separation) Off-Line Storage, Pump Station and Force Mains

Affected CSOs:

CSO Name	Annual Base Volume, mg	Annual 1996 Volume, mg	Storm No. 6 1996 Volume, mg	Storm No. 6 Peak Rate, mgd
Barton	7	7 (7)	0.6 (0.6)	13 (14.2)
Murray	5	5 (5)	0.6 (0.6)	10.1 (1.1)
Alki Beach Dr	12	12 (12)	0.7 (0.7)	10.1 (10.1)

*Values in parentheses are with West Point set point at 440 mgd.

Alternative Description:

Alternative includes three off-line storage facilities with a total volume of 1.5 MG , a 7.5 MGD pump station with approximately 7,400-feet of 24-inch force main for the CSOs listed above.

A 7.5 MGD pump station located beneath the parking area for the Fauntleroy-Vashon-Southworth Ferry docks would pick up peak flows from the Barton CSO event and pump it through 7,400-feet of 24-inch force main to an off-line storage facility located in Lowman Beach Park. A 0.1 MG below grade storage facility will serve to take the peak off the Barton CSO flow and keep the pump station size to a minimum. The 0.1 MG storage facility will also serve as a wet well for the 7.5 MDG pump station.

The force main connecting the new 7.5 MGD pump station and the new Lowman Beach Park off-line storage facility will be located along the coast line between the two facilities.

The off-line storage facility at Lowman Beach Park will have a total storage volume of approximately 0.8 MG. The facility will be filled from the new force main and by gravity from the local contributing interceptors in the vicinity of Lowman Beach Park. After the storm event subsides, the facility will fill be pumped out into the existing Murray Pump Station by a 0.4 MGD pump station.

The last off-line storage facility is located beneath SW Alaska Drive extending east from Beach Drive. This 0.6 MG storage facility will be a below grade structure with a narrow width to keep the structure within existing right-of-way. This facility will fill by gravity and be pumped out by a 0.3 MGD pump station when excess system capacity exists.

Major problems/barriers/issues to be resolved: (e.g., permitting, optimization)

Major problems associated with these facilities are securing the required sites for construction, traffic disruption due to the construction, shoreline permits and difficult construction associated with the force mains and limited construction work areas.

Capital Cost (1994 $): $17 million (Attach cost summary spreadsheet and detailed cost estimates.)

Briefly describe the alternative's characteristics in each of the following categories:

CATEGORY	CHARACTERISTICS
Impact on Natural Environment	This alternative will generate approximately 11,000 CY of spoils to be disposed of. Water quality will be affected by the reduction in the discharge of untreated sanitary sewage to surface waters.
Impact on Social Environment	This alternative will cause local traffic disruption in the activities. Severe traffic disruption would occur on SW Alaska Drive where the 0.6 MG facility is located. Severe traffic disruption will also occur during construction of the 7.5 MGD pump station due to its proximity to the Fauntleroy Ferry Terminal.
Impact on Public Health and Safety	The additional construction traffic will cause some increased safety risks. Unauthorized entry into storage facilities after completion is and additional safety risk. Public health will be positively impacted by this alternative by reducing occurrence of the Barton, Murray and Alki Beach Drive CSOs.
Fairness and Equity	This alternative will likely generate perceived negative impact to the West Seattle residents particularly for the force main construction along the shoreline. The areas in the vicinity of the storage facilities presently have existing facilities, and thus the perception of the local residents will likely be that of being unfairly burdened with the additional facilities. Disruption to the parking area for the Fauntleroy-Vashon-Southworth Ferry docks during construction will also generate negative impacts.
Economic Impacts	This alternative is estimated to cost $17 million in capital costs to meet the design criteria for the Barton, Murray and Alki Beach Drive CSOs.
Flexibility	This alternative is relatively inflexible. Accommodating additional CSO volumes if required would need to come from off-line storage facilities in the contributing neighborhoods or modifying existing pumping and force main facilities.
Degree of Conformance with Growth Management Act	N/A

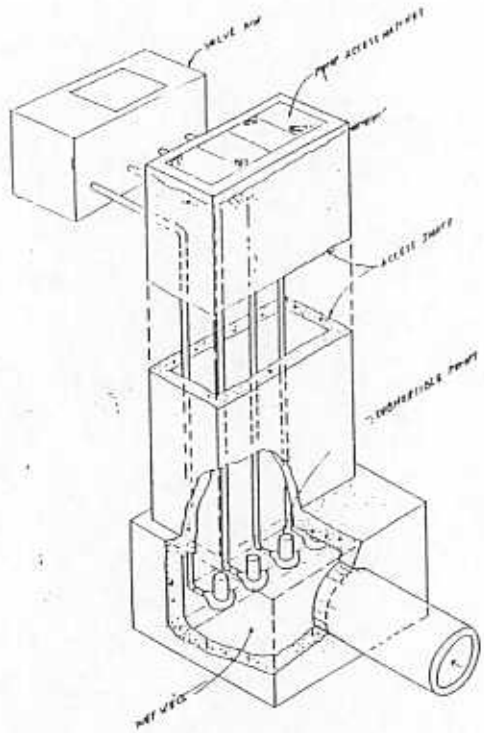

Drainage Basin: Alki (West Seattle) **CSO Control Element:** 7.5 MGD Pump Station (45' TDH)

Revised: 4/29/94 **Alternative Description:** West Seattle Off-Line Storage With Pump Station

Item Description	Quant.	Unit	Unit Cost	Total Cost
Concrete	270	CY	$420	$113,400
Temporary Sheeting and Shoring	4736	SF	$11.0	$52,096
Excavation	1165	CY	$14.0	$16,310
Backfill - Native	159	CY	$9.0	$1,431
Backfill - Imported	635	CY	$29.0	$18,415
Disposal of Excess Excavation	1006	CY	$10.0	$10,060
Street Restoration	79	SY	$56.5	$4,464
Utility Interference/Relocation	79	SY	$100	$7,900
Pumps, Associated Piping and Mechanical Equipment	1	LS	$189,865	$189,865
Miscellaneous Mechanical Equipment	1	LS	$56,959	$56,959
Electrical Equipment (15% of pump and mechanical equip.)	1	LS	$37,024	$37,024
			SUBTOTAL:	**$507,924**
Aeration (3%)	1	LS	$15,238	$15,238
Odor Control (5%)	1	LS	$25,396	$25,396
Traffic Control	1	LS	$50,000	$50,000
Dewatering (2.5%)	1	LS	$12,698	$12,698
Mobilization/Demobilization (10%)	1	LS	$61,126	$61,126
Contractor's O & P (10%)	1	LS	$61,126	$61,126
		ESTIMATED CONSTRUCTION COST:		**$733,507**
		Contingency (On Estimated Construction Cost)	30%	$220,052
		Sales Tax (On Construction Cost and Contingency)	8.2%	$78,192
		TOTAL ESTIMATED CONSTRUCTION COST:		**$1,031,750**
		Design and Owner Management	35%	$361,113
		TOTAL PROJECT COST:		**$1,392,863**

ALPS.XLS

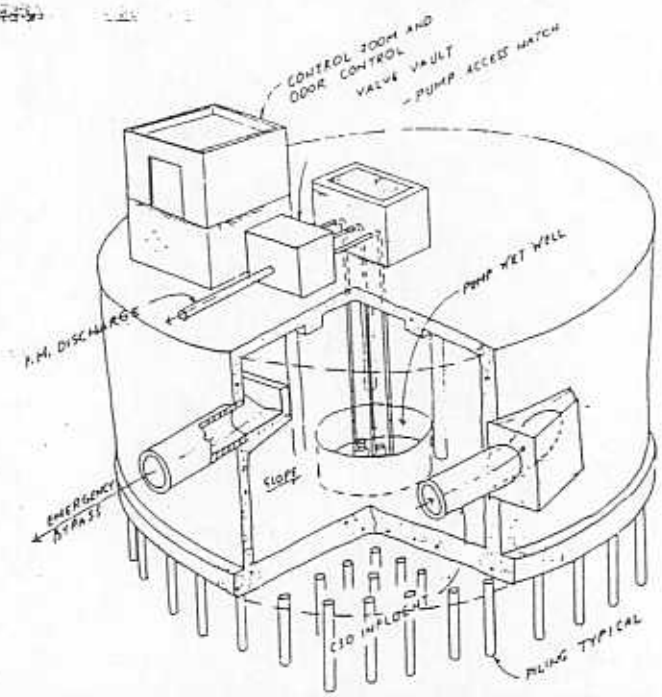

Drainage Basin: ALKI (West Seattle) **CSO Control Element:** 0.07 MG Below Grade, Circular Storage Facility

Revised: 4/29/94 **Alternative Description:** West Seattle Off-Line Storage With Pump Station

Item Description	Quant.	Unit	Unit Cost	Total Cost
Concrete	191	CY	$380	$72,580
Temporary Sheeting and Shoring	6,400	SF	$11.0	$70,400
Excavation	2,100	CY	$14.0	$29,406
Backfill - Native	316	CY	$9.0	$2,842
Backfill - Imported	1,263	CY	$29.0	$36,631
Disposal of Excess Excavation	1,785	CY	$10.0	$17,850
Piling	0	LF	$16.5	$0
Street Restoration	179	SY	$56.5	$10,114
Utility Interference/Relocation	179	SY	$100	$17,900
Pumps, Associated Piping and Mechanical Equipment	0	LS	$0	$0
			SUBTOTAL:	**$257,723**
Aeration (3%)	1	LS	$7,732	$7,732
Mechanical Washdown System (5%)	1	LS	$12,886	$12,886
Odor Control (5%)	1	LS	$12,886	$12,886
Traffic Control	1	LS	$50,000	$50,000
Dewatering (2.5%)	1	LS	$6,443	$6,443
Mobilization/Demobilization (10%)	1	LS	$34,767	$34,767
Contractor's O & P (10%)	1	LS	$34,767	$34,767
ESTIMATED CONSTRUCTION COST:				**$417,203**
Contingency (On Estimated Construction Cost)			30%	$125,161
Sales Tax (On Construction Cost and Contingency)			8.2%	$44,474
TOTAL ESTIMATED CONSTRUCTION COST:				**$586,838**
Design and Owner Management			35%	$205,393
Property Acquisition (Inc. 30% Contingency & 15% Management)	520	SF	$10	$5,200
TOTAL PROJECT COST:				**$797,432**

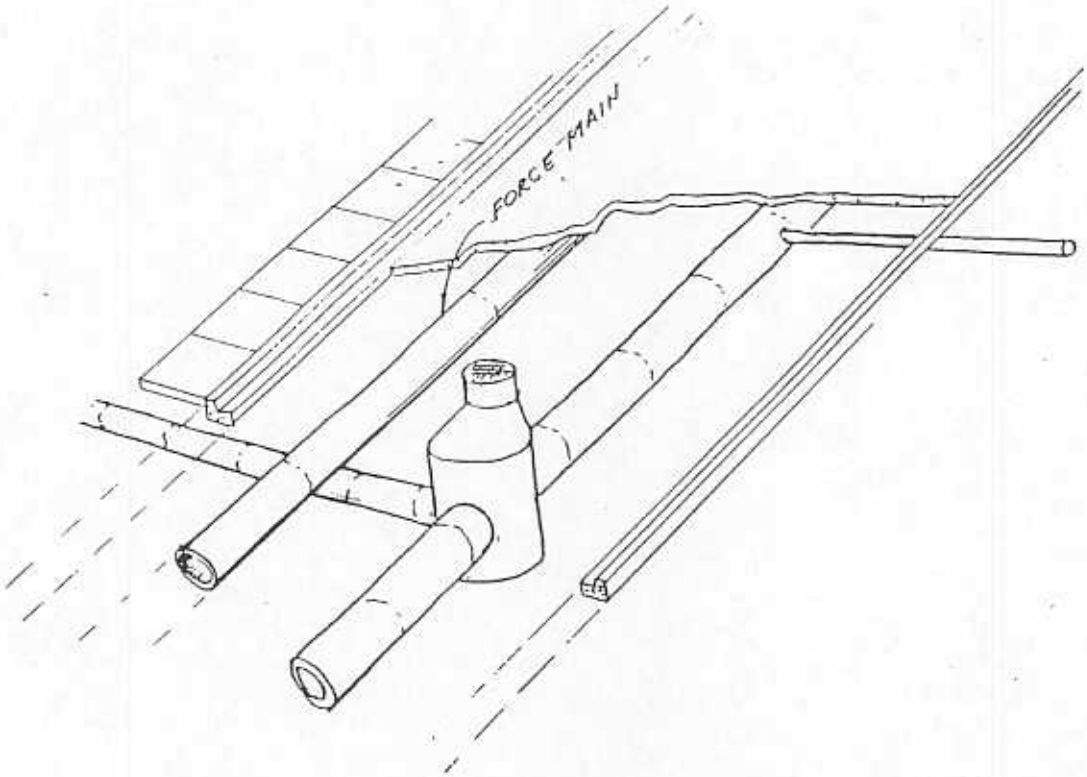

Drainage Basin: Alki (West Seattle) **CSO Control Element:** 7,400 LF of 24-Inch Force Main - 5' to Invert

Revised: 4/29/94 **Alternative Description:** West Seattle Off-Line Storage With Pump Station

Item Description	Quant.	Unit	Unit Cost	Total Cost
24 -Inch Diameter Force Main	7,400	LF	$205.0	$1,517,000
-Inch Diameter Force Main		LF		$0
-Inch Diameter Force Main		LF		$0
-Inch Diameter Force Main		LF		$0
Street Restoration	14,800	SY	$56.0	$828,800
			SUBTOTAL:	**$2,345,800**
Mobilization/Demobilization (10%)	1	LS	$234,580.0	$234,580
Contractor's O & P (10%)	1	LS	$234,580.0	$234,580
		ESTIMATED CONSTRUCTION COST:		**$2,814,960**
		Contingency (On Estimated Construction Cost)	30%	$844,488
		Sales Tax (On Construction Cost and Contingency)	8.2%	$300,075
		TOTAL ESTIMATED CONSTRUCTION COST:		**$3,959,523**
		Design and Owner Management	35%	$1,385,833
		TOTAL PROJECT COST:		**$5,345,356**

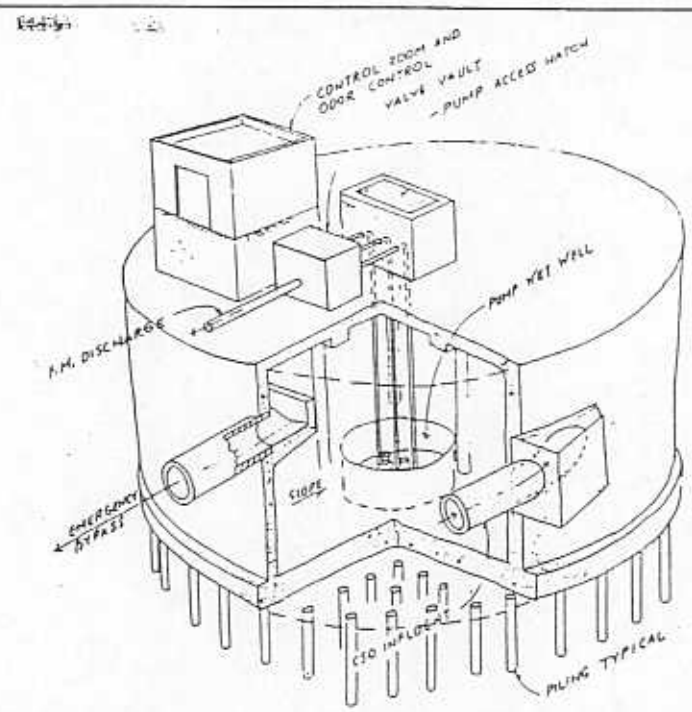

Drainage Basin: ALKI (West Seattle) **CSO Control Element:** 0.8 MG Below Grade, Circular Storage Facility

Revised: 4/29/94 **Alternative Description:** West Seattle Off-Line Storage With Pump Station

Item Description	Quant.	Unit	Unit Cost	Total Cost
Concrete	1,341	CY	$370	$496,170
Temporary Sheeting and Shoring	15,600	SF	$11.0	$171,600
Excavation	12,614	CY	$14.0	$176,594
Backfill - Native	1,475	CY	$9.0	$13,273
Backfill - Imported	5,899	CY	$29.0	$171,071
Disposal of Excess Excavation	11,139	CY	$10.0	$111,390
Piling	0	LF	$16.5	$0
Street Restoration	958	SY	$56.5	$54,127
Utility Interference/Relocation	958	SY	$100	$95,800
Pumps, Associated Piping and Mechanical Equipment	1	LS	$64,709	$64,709
			SUBTOTAL:	**$1,354,733**
Aeration (3%)	1	LS	$40,642	$40,642
Mechanical Washdown System (5%)	1	LS	$67,737	$67,737
Odor Control (5%)	1	LS	$67,737	$67,737
Traffic Control	1	LS	$50,000	$50,000
Dewatering (2.5%)	1	LS	$33,868	$33,868
Mobilization/Demobilization (10%)	1	LS	$161,472	$161,472
Contractor's O & P (10%)	1	LS	$161,472	$161,472
ESTIMATED CONSTRUCTION COST:				**$1,937,661**
Contingency (On Estimated Construction Cost)			30%	$581,298
Sales Tax (On Construction Cost and Contingency)			8.2%	$206,555
TOTAL ESTIMATED CONSTRUCTION COST:				**$2,725,513**
Design and Owner Management			35%	$953,930
Property Acquisition (Inc. 30% Contingency & 15% Management)	5,942	SF	$10	$59,420
TOTAL PROJECT COST:				**$3,738,863**

ACSTOK.XLS

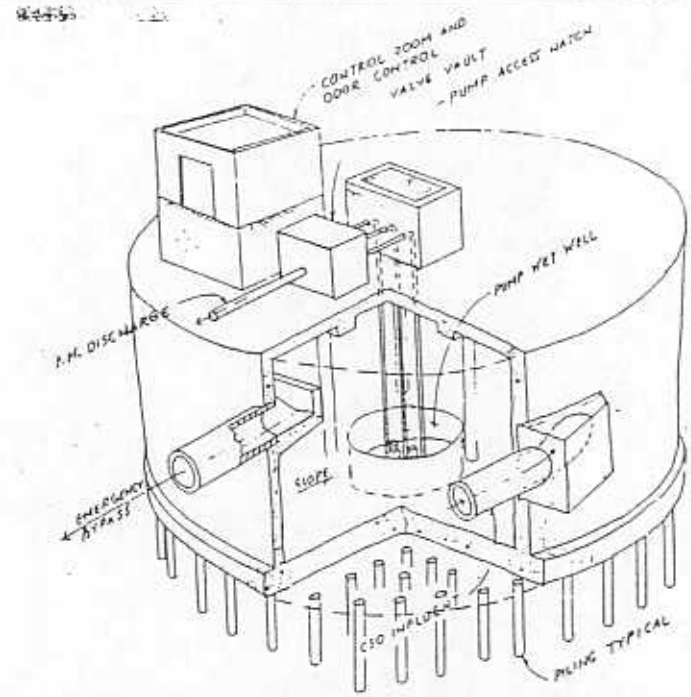

Drainage Basin: ALKI (West Seattle) **CSO Control Element:** 0.60 MG Below Grade, Circular Storage Tank

Revised: 4/29/94 **Alternative Description:** West Seattle Off-Line Storage With Pump Station

Item Description	Quant.	Unit	Unit Cost	Total Cost
Concrete	1,046	CY	$370	$387,020
Temporary Sheeting and Shoring	13,800	SF	$11.0	$151,800
Excavation	9,933	CY	$14.0	$139,059
Backfill - Native	1,194	CY	$9.0	$10,744
Backfill - Imported	4,775	CY	$29.0	$138,473
Disposal of Excess Excavation	8,739	CY	$10.0	$87,390
Piling	0	LF	$16.5	$0
Street Restoration	760	SY	$56.5	$42,940
Utility Interference/Relocation	760	SY	$100	$76,000
Pumps, Associated Piping and Mechanical Equipment	1	LS	$61,179	$61,179
			SUBTOTAL:	**$1,094,604**
Aeration (3%)	1	LS	$32,838	$32,838
Mechanical Washdown System (5%)	1	LS	$54,730	$54,730
Odor Control (5%)	1	LS	$54,730	$54,730
Traffic Control	1	LS	$50,000	$50,000
Dewatering (2.5%)	1	LS	$27,365	$27,365
Mobilization/Demobilization (10%)	1	LS	$131,427	$131,427
Contractor's O & P (10%)	1	LS	$131,427	$131,427
ESTIMATED CONSTRUCTION COST:				**$1,577,121**
Contingency (On Estimated Construction Cost)			30%	$473,136
Sales Tax (On Construction Cost and Contingency)			8.2%	$168,121
TOTAL ESTIMATED CONSTRUCTION COST:				**$2,218,379**
Design and Owner Management			35%	$776,433
Property Acquisition (inc. 30% Contingency & 15% Management)	4,456	SF	$10	$44,560
TOTAL PROJECT COST:				**$3,039,371**

ACSTOR.XLS

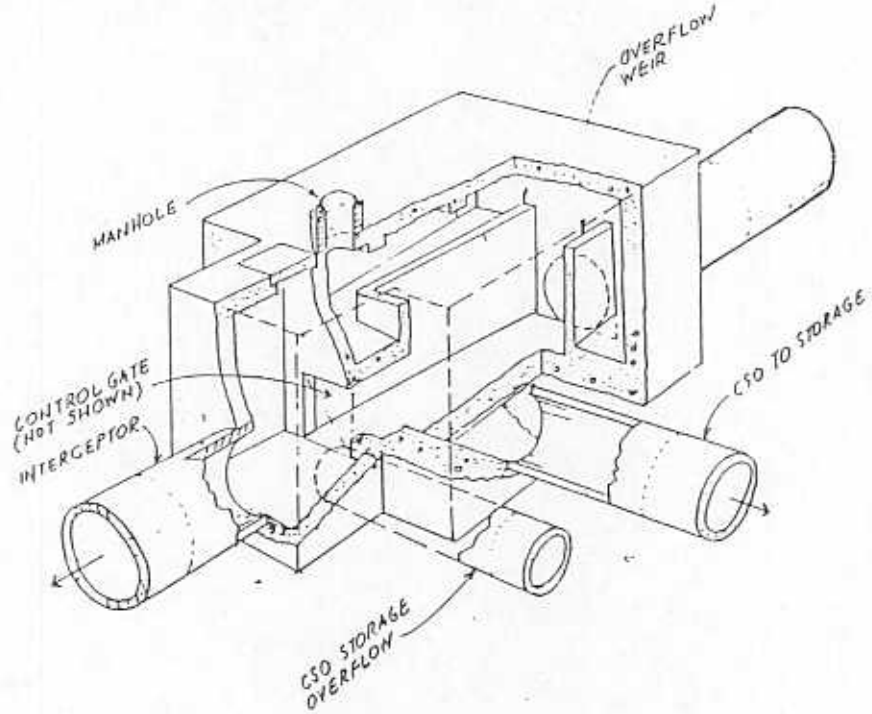

Drainage Basin: Alki (West Seattle) **CSO Control Element:** CSO Control Structure for Off-Line Storage Facility

Revised: 4/29/94 **Alternative Description:** Common to All Alternatives

Item Description	Quant.	Unit	Unit Cost	Total Cost
Concrete	151	CY	$400.0	$60,400
Temporary Sheeting and Shoring	4,255	SF	$11.0	$46,805
Excavation	948	CY	$14.0	$13,272
Backfill-Native	104	CY	$9.0	$936
Backfill - Imported	416	CY	$29.0	$12,064
Disposal of Excess Excavation	844	CY	$10.0	$8,440
Sluice Gates	1	EA	$75,000	$75,000
Street Restoration	118	SY	$60.0	$7,084
Demolish Existing Interceptor/Construct Temporary Bypass	1	LS	$27,902	$27,902
Traffic Control	1	LS	$50,000	$50,000
Utility Interference/Relocation	118	SY	$100.0	$11,806
Dewatering (2.5%)	1	LS	$7,843	$7,843
			SUBTOTAL:	**$321,552**
Mobilization/Demobilization (10%)	1	LS	$32,155	$32,155
Contractor's O & P (10%)	1	LS	$32,155	$32,155
			ESTIMATED CONSTRUCTION COST:	**$385,862**
			Contingency (On Estimated Construction Cost) 30%	$115,759
			Sales Tax (On Construction Cost and Contingency) 8.2%	$41,133
			TOTAL ESTIMATED CONSTRUCTION COST:	**$542,754**
			Design and Owner Management 35%	$189,964
			TOTAL PROJECT COST:	**$732,718**

SUMMARY OF ALTERNATIVES
ALKI/WEST SEATTLE BASIN
Revision Date: 6/2/94

Alternative: West Seattle Tight Piping
KCM

Component	Project Cost	Spreadsheet Name
7.5 MGD Pump Station (45' TDH)	$1,392,863	ALFPS2.XLS
0.07 MG Below Grade Circular Storage Facility - No Pump Station, No Piles	$797,432	ACSTO6.XLS
7,400 LF of 24-inch Force Main Along Coast Line - 5' Average Invert Depth	$5,345,356	AFMAI2.XLS
17.6 MGD Pump Station (58' TDH)	$2,110,874	ALFPS3.XLS
7,900 LF of 30-inch Force Main - 6' Average Invert Depth	$6,408,593	AFMAI3.XLS
27.9 MGD Pump Station (48' TDH)	$2,843,368	ALFPS4.XLS
5,300 LF of 36-inch Force Main Beneath Paved Road - 6' Average Invert Depth	$4,722,133	AFMAI4.XLS
Total Alternative Cost:	**$23,620,619**	

METRO CSO 5-YEAR UPDATE
ALTERNATIVE INFORMATION SUMMARY

Alternative Name: West Seattle Tight Piping

Alternative type: (e.g., treatment, conveyance, separation) Off-Line Storage, Pump Stations and Force Mains

Affected CSOs:

CSO Name	Annual Base Volume, mg	Annual 1996 Volume, mg	Storm No. 6 1996 Volume, mg	Storm No. 6 Peak Rate, mgd
Barton	7	7 (7)	0.6 (0.6)	13.0 (14.2)
Murray	5	5 (5)	0.6 (0.6)	10.1 (1.1)
Alki Beach Dr	12	12 (12)	0.7 (0.7)	10.1 (10.1)

*Values in parentheses are with West Point set point at 440 mgd.

Alternative Description:

Alternative includes a 7.5 MGD pump station with approximately 7,400-feet of 24-inch force main, an 18 MGD pump station with approximately 7,900-feet of 30-inch force main and a 28 MGD pump station with approximately 5,300-feet of 36-inch force main for the CSOs listed above.

A 7.5 MGD pump station located beneath the parking area for the Fauntleroy-Vashon-Southworth Ferry docks would pick up peak flows from the Barton CSO event and pump it through 7,400-feet of 24-inch force main to an 18 MGD pump station located in Lowman Beach Park. A 0.1 MG below-grade storage facility will serve to take the peak off the Barton CSO flow and keep the pump station size to a minimum. The 0.1 MG storage facility will also serve as a wet well for the 7.5 MGD pump station.

The force main connecting the new 7.5 MGD pump station and the new Lowman Beach Park pump station will be located along the coast and generally follow the coast line between the two facilities.

The 18 MGD pump station at Lowman Beach ark will pick up the flows from the 24-inch force main and the local Murray CSO volume and pump them through a 7,900-foot long 30-inch force main to the 28 MGD pump station located near Beach Drive and SW Alaska Drive. The alignment of this force main segment will generally follow Beach Drive.

A 5,300-foot long 36-inch force main will connect the 28 MGD pump station with the existing Alki Point Treatment Plant. The alignment of this force main segment will generally follow Beach Drive.

Major problems/barriers/issues to be resolved: (e.g., permitting, optimization)

Major problems associated with these facilities are securing the required sites for construction, traffic disruption due to the construction, shoreline permits and difficult construction associated with the force mains and limited construction work areas.

Capital Cost (1994 $): $24 million (Attach cost summary spreadsheet and detailed cost estimates.)

Briefly describe the alternative's characteristics in each of the following categories:

CATEGORY	CHARACTERISTICS
Impact on Natural Environment	This alternative will generate approximately 7,000 CY of spoils to be disposed of. Water quality will be affected by the reduction in discharge of untreated sanitary sewage to surface water.
Impact on Social Environment	This alternative will cause traffic disruption along Beach Drive, between Alki Point Treatment Plant and the Fauntleroy Ferry Terminal, related to the force main construction.
Impact on Public Health and Safety	The additional construction traffic will cause some increased safety risks. Public health will be positively impacted by this alternative by reducing occurrence of the Barton, Murray, and Alki Beach Drive CSOs.
Fairness and Equity	This alternative will likely generate perceived negative impact to the West Seattle residents particularly for the force main construction along the shoreline and along Beach Drive. Disruption to the parking area for the Fauntleroy-Vashon-Southworth Ferry docks during construction will also generate negative impacts.
Economic Impacts	This alternative is estimated to cost $24 million in capital costs to meet the design criteria for the Barton, Murray, and Alki Beach Drive CSOs.
Flexibility	This alternative is relatively inflexible. Accommodating additional CSO volumes if required would need to come from off-line storage facilities in the contributing neighborhoods or modifying existing pumping and force main facilities.
Degree of Conformance with Growth Management Act	N/A

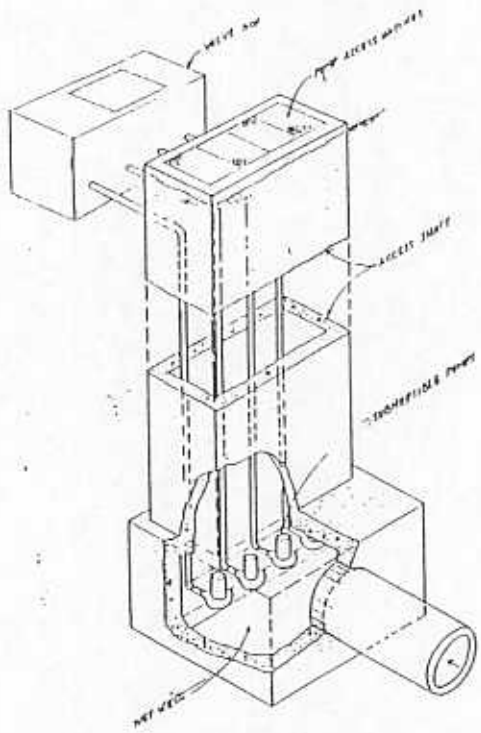

Drainage Basin: Alki (West Seattle) **CSO Control Element:** 7.5 MGD Pump Station (45' TDH)

Revised: 4/29/94 **Alternative Description:** West Seattle Tight Piping

Item Description	Quant.	Unit	Unit Cost	Total Cost
Concrete	270	CY	$420	$113,400
Temporary Sheeting and Shoring	4736	SF	$11.0	$52,096
Excavation	1165	CY	$14.0	$16,310
Backfill - Native	159	CY	$9.0	$1,431
Backfill - Imported	635	CY	$29.0	$18,415
Disposal of Excess Excavation	1006	CY	$10.0	$10,060
Street Restoration	79	SY	$56.5	$4,464
Utility Interference/Relocation	79	SY	$100	$7,900
Pumps, Associated Piping and Mechanical Equipment	1	LS	$189,865	$189,865
Miscellaneous Mechanical Equipment	1	LS	$56,959	$56,959
Electrical Equipment (15% of pump and mechanical equip.)	1	LS	$37,024	$37,024
			SUBTOTAL:	**$507,924**
Aeration (3%)	1	LS	$15,238	$15,238
Odor Control (5%)	1	LS	$25,396	$25,396
Traffic Control	1	LS	$50,000	$50,000
Dewatering (2.5%)	1	LS	$12,698	$12,698
Mobilization/Demobilization (10%)	1	LS	$61,126	$61,126
Contractor's O & P (10%)	1	LS	$61,126	$61,126
			ESTIMATED CONSTRUCTION COST:	**$733,507**
Contingency (On Estimated Construction Cost)			30%	$220,052
Sales Tax (On Construction Cost and Contingency)			8.2%	$78,192
			TOTAL ESTIMATED CONSTRUCTION COST:	**$1,031,750**
Design and Owner Management			35%	$361,113
			TOTAL PROJECT COST:	**$1,392,863**

ALPTM.XLS

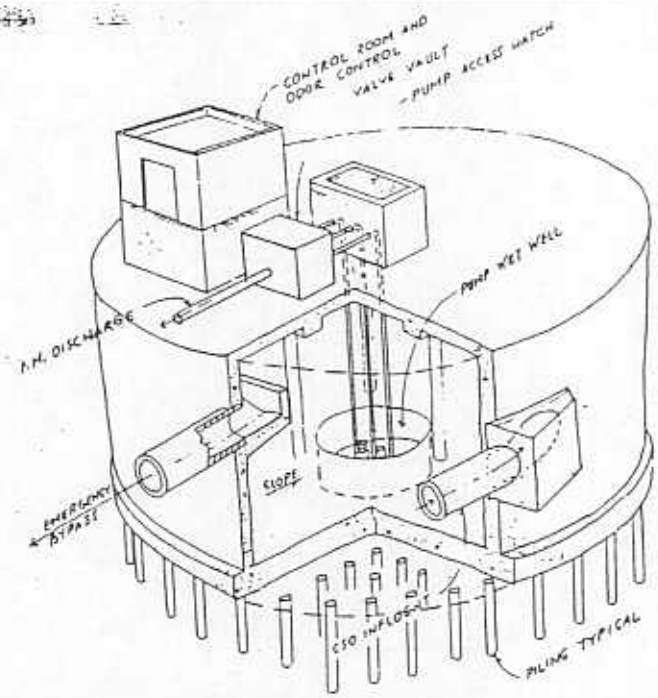

Drainage Basin: ALKI (West Seattle) **CSO Control Element:** 0.07 MG Below Grade, Circular Strorage Facility

Revised: 4/29/94 **Alternative Description:** West Seattle Tight Piping

Item Description	Quant.	Unit	Unit Cost	Total Cost
Concrete	191	CY	$380	$72,580
Temporary Sheeting and Shoring	6,400	SF	$11.0	$70,400
Excavation	2,100	CY	$14.0	$29,406
Backfill - Native	316	CY	$9.0	$2,842
Backfill - Imported	1,263	CY	$29.0	$36,631
Disposal of Excess Excavation	1,785	CY	$10.0	$17,850
Piling	0	LF	$16.5	$0
Street Restoration	179	SY	$56.5	$10,114
Utility Interference/Relocation	179	SY	$100	$17,900
Pumps, Associated Piping and Mechanical Equipment	0	LS	$0	$0
			SUBTOTAL:	**$257,723**
Aeration (3%)	1	LS	$7,732	$7,732
Mechanical Washdown System (5%)	1	LS	$12,886	$12,886
Odor Control (5%)	1	LS	$12,886	$12,886
Traffic Control	1	LS	$50,000	$50,000
Dewatering (2.5%)	1	LS	$6,443	$6,443
Mobilization/Demobilization (10%)	1	LS	$34,767	$34,767
Contractor's O & P (10%)	1	LS	$34,767	$34,767
ESTIMATED CONSTRUCTION COST:				**$417,203**
Contingency (On Estimated Construction Cost)			30%	$125,161
Sales Tax (On Construction Cost and Contingency)			8.2%	$44,474
TOTAL ESTIMATED CONSTRUCTION COST:				**$586,838**
Design and Owner Management			35%	$205,393
Property Acquisition (Inc. 30% Contingency & 15% Management)	520	SF	$10	$5,200
TOTAL PROJECT COST:				**$797,432**

ACSTOK.XLS

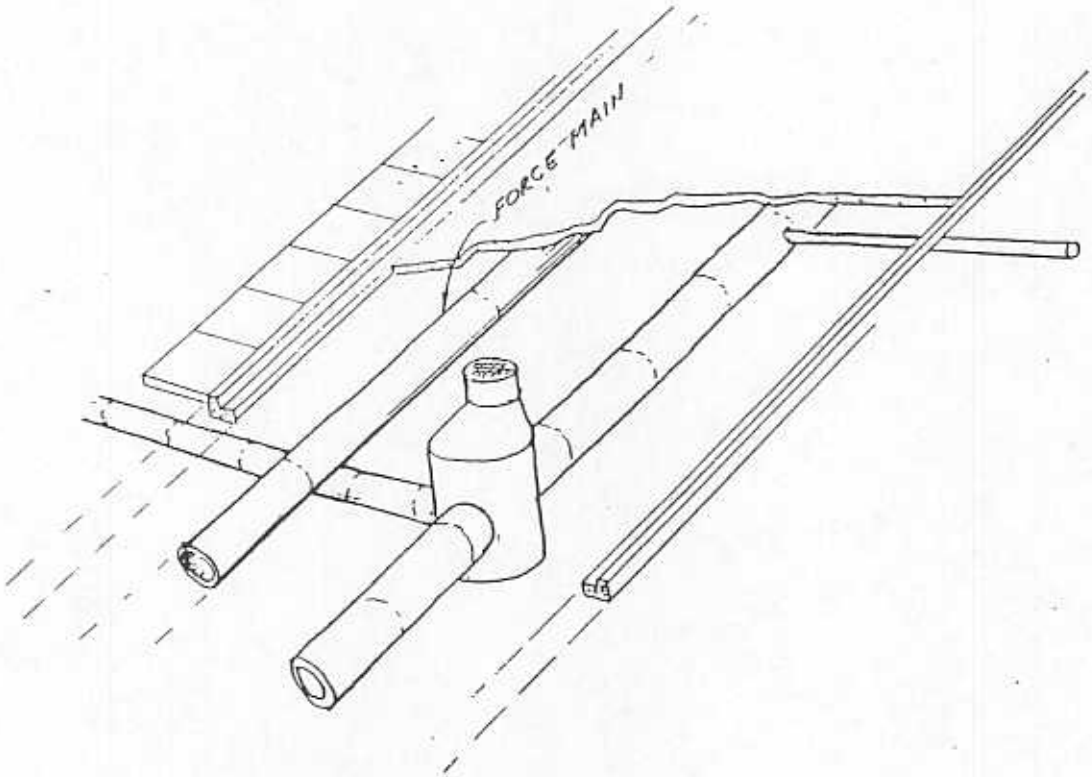

Drainage Basin: Alki (West Seattle) **CSO Control Element:** 7,400 LF of 24-inch Force Main - 5' to Invert

Revised: 4/29/94 **Alternative Description:** West Seattle Tight Piping

Item Description	Quant.	Unit	Unit Cost	Total Cost
24 -Inch Diameter Force Main	7,400	LF	$205.0	$1,517,000
-Inch Diameter Force Main		LF		$0
-Inch Diameter Force Main		LF		$0
-Inch Diameter Force Main		LF		$0
Street Restoration	14,800	SY	$56.0	$828,800
			SUBTOTAL:	**$2,345,800**
Mobilization/Demobilization (10%)	1	LS	$234,580.0	$234,580
Contractor's O & P (10%)	1	LS	$234,580.0	$234,580
			ESTIMATED CONSTRUCTION COST:	**$2,814,960**
Contingency (On Estimated Construction Cost)			30%	$844,488
Sales Tax (On Construction Cost and Contingency)			8.2%	$300,075
			TOTAL ESTIMATED CONSTRUCTION COST:	**$3,959,523**
Design and Owner Management			35%	$1,385,833
			TOTAL PROJECT COST:	**$5,345,356**

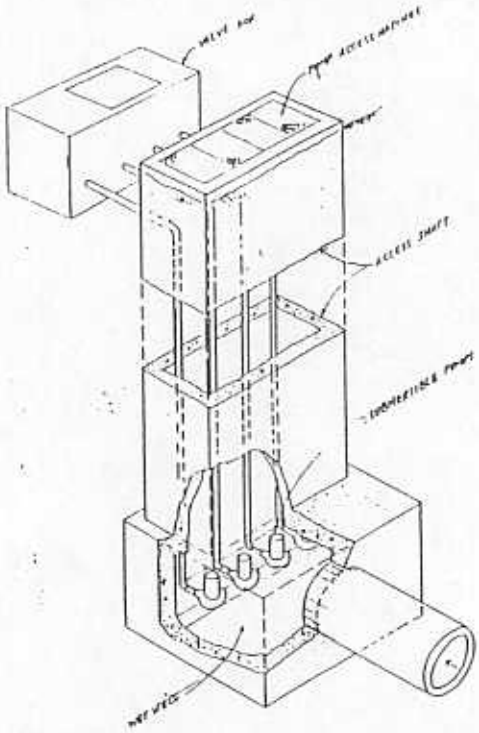

Drainage Basin: ALKI (West Seattle) **CSO Control Element:** 17.6 MGD Pump Station (58' TDH)

Revised: 4/29/94 **Alternative Description:** West Seattle Tight Piping

Item Description	Quant.	Unit	Unit Cost	Total Cost
Concrete	352	CY	$420	$147,840
Temporary Sheeting and Shoring	5335	SF	$11.0	$58,685
Excavation	1498	CY	$14.0	$20,972
Backfill - Native	187	CY	$9.0	$1,683
Backfill - Imported	746	CY	$29.0	$21,634
Disposal of Excess Excavation	1311	CY	$10.0	$13,110
Street Restoration	102	SY	$56.5	$5,763
Utility Interference/Relocation	102	SY	$100	$10,200
Pumps, Associated Piping and Mechanical Equipment	1	LS	$343,273	$343,273
Miscellaneous Mechanical Equipment	1	LS	$102,982	$102,982
Electrical Equipment (15% of pump and mechanical equip.)	1	LS	$66,938	$66,938
			SUBTOTAL:	**$793,080**
Aeration (3%)	1	LS	$23,792	$23,792
Odor Control (5%)	1	LS	$39,654	$39,654
Traffic Control	1	LS	$50,000	$50,000
Dewatering (2.5%)	1	LS	$19,827	$19,827
Mobilization/Demobilization (10%)	1	LS	$92,635	$92,635
Contractor's O & P (10%)	1	LS	$92,635	$92,635
	ESTIMATED CONSTRUCTION COST:			**$1,111,624**
	Contingency (On Estimated Construction Cost)		30%	$333,487
	Sales Tax (On Construction Cost and Contingency)		8.2%	$118,499
	TOTAL ESTIMATED CONSTRUCTION COST:			**$1,563,610**
	Design and Owner Management		35%	$547,264
	TOTAL PROJECT COST:			**$2,110,874**

ALKI750.XLS

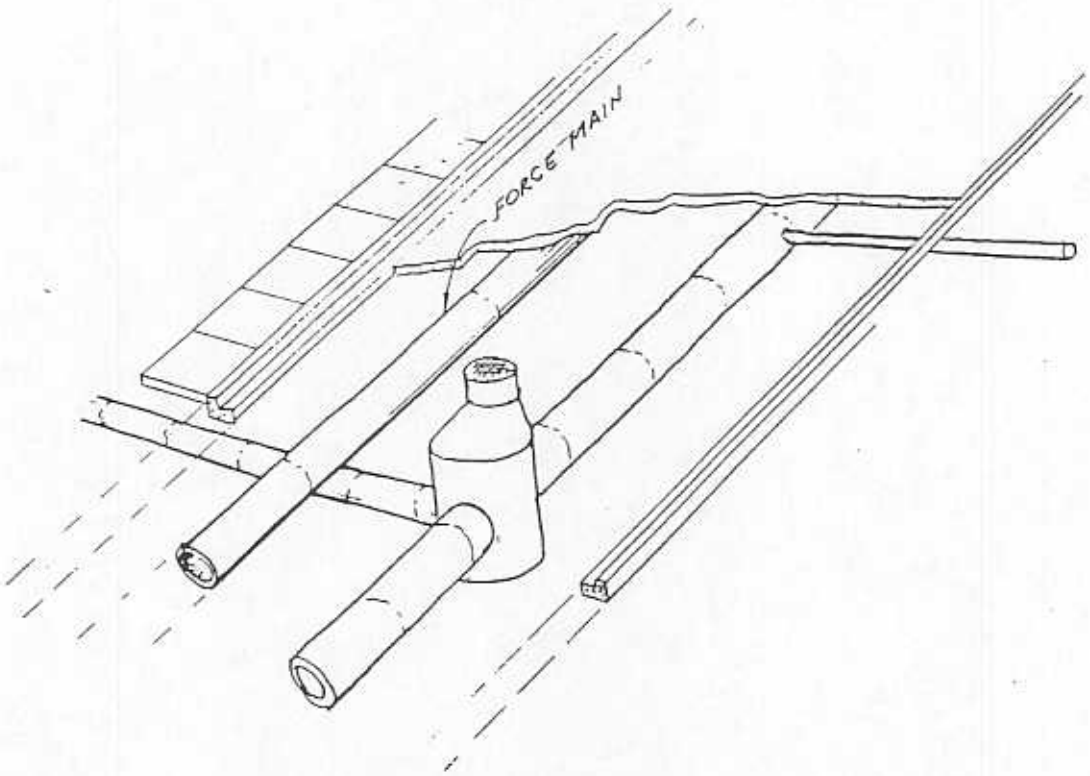

Drainage Basin: Alki (West Seattle) **CSO Control Element:** 7,900 LF of 30-inch Force Main - 6' to Invert

Revised: 4/29/94 **Alternative Description:** West Seattle Tight Piping

Item Description	Quant.	Unit	Unit Cost	Total Cost
30 -Inch Diameter Force Main	7,900	LF	$244.0	$1,927,600
-Inch Diameter Force Main		LF		$0
-Inch Diameter Force Main		LF		$0
-Inch Diameter Force Main		LF		$0
Street Restoration	15,800	SY	$56.0	$884,800
			SUBTOTAL:	**$2,812,400**
Mobilization/Demobilization (10%)	1	LS	$281,240.0	$281,240
Contractor's O & P (10%)	1	LS	$281,240.0	$281,240
			ESTIMATED CONSTRUCTION COST:	**$3,374,880**
Contingency (On Estimated Construction Cost)			30%	$1,012,464
Sales Tax (On Construction Cost and Contingency)			8.2%	$359,762
			TOTAL ESTIMATED CONSTRUCTION COST:	**$4,747,106**
Design and Owner Management			35%	$1,661,487
			TOTAL PROJECT COST:	**$6,408,593**

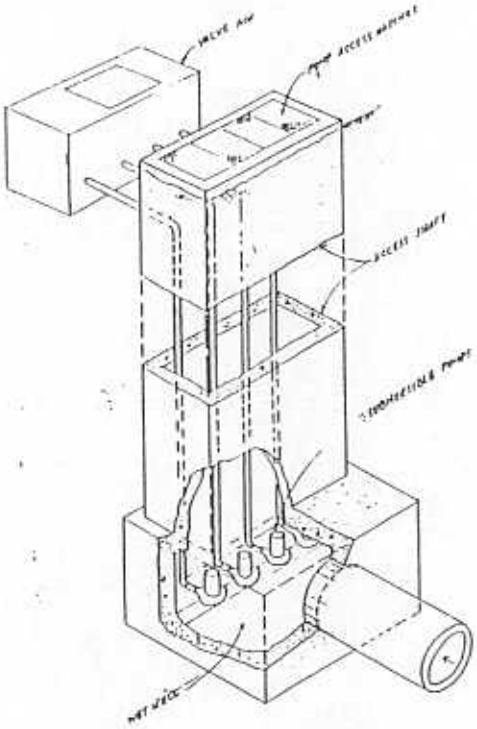

Drainage Basin: Alki (West Seattle) **CSO Control Element:** 27.9 MGD Pump Station (48' TDH)

Revised: 4/29/94 **Alternative Description:** West Seattle Tight Piping

Item Description	Quant.	Unit	Unit Cost	Total Cost
Concrete	436	CY	$420	$183,120
Temporary Sheeting and Shoring	5947	SF	$11.0	$65,417
Excavation	1838	CY	$14.0	$25,732
Backfill - Native	215	CY	$9.0	$1,935
Backfill - Imported	859	CY	$29.0	$24,911
Disposal of Excess Excavation	1623	CY	$10.0	$16,230
Street Restoration	125	SY	$56.5	$7,063
Utility Interference/Relocation	125	SY	$100	$12,500
Pumps, Associated Piping and Mechanical Equipment	1	LS	$499,720	$499,720
Miscellaneous Mechanical Equipment	1	LS	$149,916	$149,916
Electrical Equipment (15% of pump and mechanical equip.)	1	LS	$97,445	$97,445
			SUBTOTAL:	**$1,083,989**
Aeration (3%)	1	LS	$32,520	$32,520
Odor Control (5%)	1	LS	$54,199	$54,199
Traffic Control	1	LS	$50,000	$50,000
Dewatering (2.5%)	1	LS	$27,100	$27,100
Mobilization/Demobilization (10%)	1	LS	$124,781	$124,781
Contractor's O & P (10%)	1	LS	$124,781	$124,781
	ESTIMATED CONSTRUCTION COST:			**$1,497,369**
	Contingency (On Estimated Construction Cost)		30%	$449,211
	Sales Tax (On Construction Cost and Contingency)		8.2%	$159,620
	TOTAL ESTIMATED CONSTRUCTION COST:			**$2,106,199**
	Design and Owner Management		35%	$737,170
	TOTAL PROJECT COST:			**$2,843,368**

ALTSMLTR

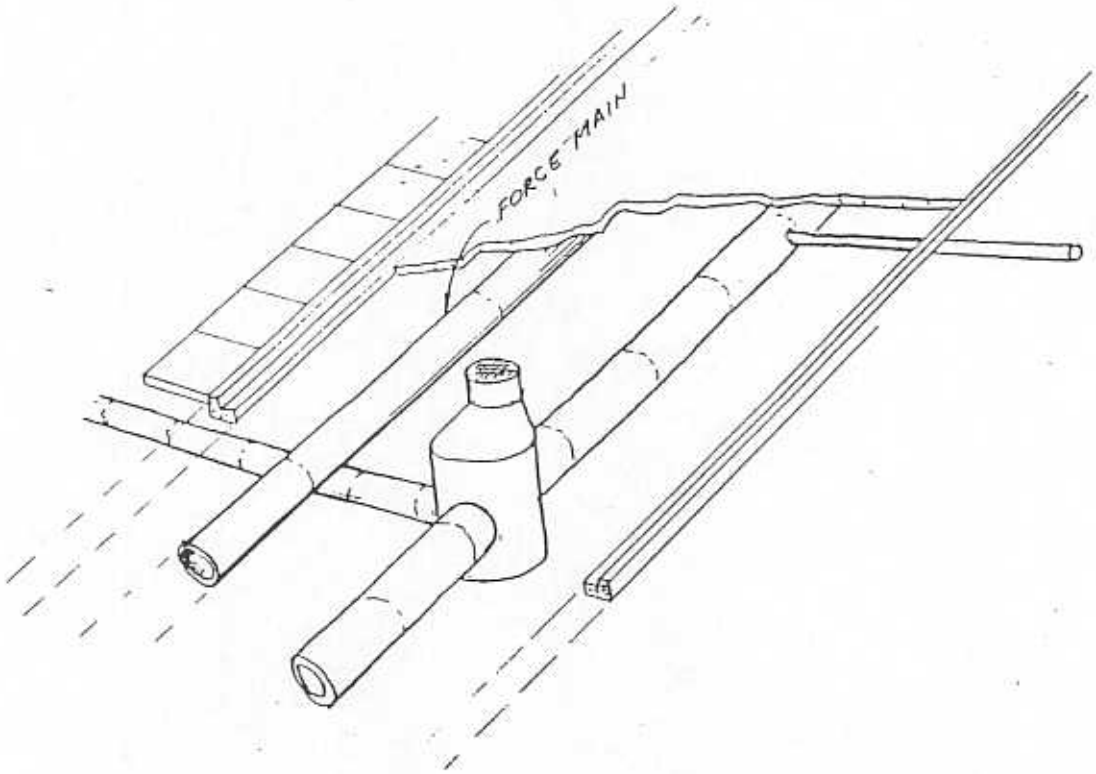

Drainage Basin: Alki (West Seattle) **CSO Control Element:** 5,300 LF of 36-inch Force Main - 6' to Invert

Revised: 4/29/94 **Alternative Description:** West Seattle Tight Piping

Item Description	Quant.	Unit	Unit Cost	Total Cost
36 -Inch Diameter Force Main	5,300	LF	$279.0	$1,478,700
-Inch Diameter Force Main		LF		$0
-Inch Diameter Force Main		LF		$0
-Inch Diameter Force Main		LF		$0
Street Restoration	10,600	SY	$56.0	$593,600
			SUBTOTAL:	**$2,072,300**
Mobilization/Demobilization (10%)	1	LS	$207,230.0	$207,230
Contractor's O & P (10%)	1	LS	$207,230.0	$207,230
			ESTIMATED CONSTRUCTION COST:	**$2,486,760**
Contingency (On Estimated Construction Cost)			30%	$746,028
Sales Tax (On Construction Cost and Contingency)			8.2%	$265,089
			TOTAL ESTIMATED CONSTRUCTION COST:	**$3,497,877**
Design and Owner Management			35%	$1,224,257
			TOTAL PROJECT COST:	**$4,722,133**

APPENDIX E

West Seattle CSO Control Alternatives

Harbor Regulator Conveyance/Storage Alternative
Harbor Regulator Separation Alternative
Chelan Regulator CSO Control Alternative
Eighth Ave. S. Regulator Control Alternative
SW Michigan Street Regulator Control Alternative

METRO CSO 5-YEAR UPDATE
ALTERNATIVE INFORMATION SUMMARY

Alternative Name: Harbor Ave. Separation

Alternative Type: (e.g., treatment, conveyance, separation) Separation

Affected CSOs:

CSO Name	Annual Base Volume, mg	Annual 1996 Volume, mg	Storm No. 6 1996 Volume, mg	Storm No. 6 Peak Rate, mgd
Harbor	58.0	58.0 (58.0)	3.4 (3.4)	15.3 (15.3)

*Values in parentheses are with West Point set point at 440 mgd.

Alternative Description:

This alternative would involve CSO separation in the residential area west of the Harbor Regulator Station (Basin 1). This project would separate the storm-water runoff from an area of 413 acres by installing storm drains, connecting the existing catch basins or adding new catch basins and discharging directly into Elliott Bay.

Major problems/barriers/issues to be resolved: (e.g., permitting, optimization)

Major issues associated with this alternative include disruption to traffic, the shoreline permits associated with outfall construction, and NPDES permitting for discharge to receiving waters.

Capital Cost (1994 $): $ 41.3 million (Attach cost summary spreadsheet and detailed cost estimates.)

Briefly describe the alternative's characteristics in each of the following categories:

CATEGORY	CHARACTERISTICS
Impact on Natural Environment	This alternative will affect receiving water quality by reducing the discharge of sanitary sewage to surface water and possibly increasing the discharge loadings of metals and hydrocarbons.
Impact on Social Environment	This alternative will result in some traffic and neighborhood disruption on area streets during construction.
Impact on Public Health and Safety	Possible slight negative safety impacts due to traffic interferences during construction. Public health impacts equivalent to all other 1-year CSO reduction alternatives.
Fairness and Equity	Perceived negative effects will be temporary, during construction.
Economic Impacts	The capital cost of this alternative is $41.3 million.
Flexibility	This alternative would reduce the need for any CSO control measures.

CSO Alternative: Harbor Avenue Separation

Item	Total Cost
Separate 413 acres*	**$18,125,000**
Mobilization/demobilization (10%)	$1,812,500
Contractor O&P (10%)	$1,812,500
ESTIMATED CONSTRUCTION COST:	**$21,750,000**
Contingency (30%)	$6,524,000
Sales tax (8.2%)	$2,319,000
TOTAL ESTIMATED CONSTRUCTION COST:	**$30,593,000**
Design and owner management (35%)	$10,707,000
TOTAL PROJECT COST:	**$41,300,000**

*Source: Based on detailed cost analysis performed to determine separation cost per acre of residential area in Ballard basin.

Chelan Regulator

S. Merrill 11/5/94

Estimate for storage of excess 4 MG overflow
Use previous estimate for Habor Storage, Brown and Caldwell, Jan. 1993 for caissons adjacent to the West Seattle Pump Station

Storage caissons from Attached

Caisson Constructon		$5,823,353
Contractor Indirects		$600,782
Subtotal		$6,424,135
Mobilization/demobilization	10%	$642,414
Contractors O&P	10%	$642,414
Subtotal		$7,708,962
Contingency	30%	$2,312,689
Sales Tax	8.20%	$821,775
Total Estimated Construction, storage		$10,843,426
Design and Owner Management	35%	$3,795,199
Property Acquisition		$217,000
Total Project Cost, Storage		$14,855,625

Auxillary Facilities from KCM work--total project costs for each element

Flow regulating structure for 54-inch interceptor	$643,939
Junction chamber for 54-inch interceptor	$540,746
100-ft of 54-inch connecting sewer, 15-ft to invert	$212,374
Total Alternative Project Cost	$16,252,684

ESTIMATE #: 739250P Project: WEST SEATTLE CSO 5.0 STORAGE w/PUMPS Date: 2-08-93 Time: 4:44 pm

Item	Description	Takeoff Quantity	T/O Unit	<-------Labor--------> MHrs/CHrs	Amount($)	Material Amount($)	Sub Amount($)	Equipment Amount($)	Total Amount($)
Group Ph									
Descript									
GRP # 010	CONTRACTOR INDIRECTS								
1.000	GENERAL								
1.110	FIELD MANAGEMENT								
1110	Project Manager		MO						
1110	Project Manager	9.0	MO	1,557.0	63,245				63,245
1111	Project Super	36.0	MO	6,228.0	225,890				225,890
1112	Project Engineer	12.0	MO	2,076.0	58,668				58,668
1113	Estimator/Scheduler	12.0	MO	2,076.0	67,906				67,906
1114	Project Secretary	36.0	MO	6,228.0	70,563				70,563
1.150	MOBILIZATION								
1510	Office Trailer	36.0	MO					12,600	12,600
1511	Temp Shed	400.0	SF					2,000	2,000
1512	Temp Power	1.0	EA	4.0	135	208	175		518
1513	Temp Water	1.0	EA	3.0	117	168	250		535
1514	Porta Potty	36.0	MO					5,400	5,400
1515	Job Phone	36.0	MO					10,800	10,800
1516	Misc Supplies	36.0	MO					7,200	7,200
1518	Survey/Stacking	5.0	DY	5.0	2,393				2,393
1551	Fork Lift, 15000# Cap	36.0	MO					45,000	45,000
1.170	MISC. CONDITIONS								
1701	General Cleanup	48,000.0	SF	288.0	7,995				7,995
1702	Final Cleanup	48,000.0	SF	576.0	15,990				15,990
1703	Signage	1.0	EA					1,200	1,200
1704	Small Tools	48,000.0	SF					2,880	2,880
	CSI Division Subtotal:			19,041.0	$ 512,901	$ 376	$ 425	$ 87,080	$ 600,782
GENERAL	Group Subtotal:			19,041.0	$ 512,901	$ 376	$ 425	$ 87,080	$ 600,782

SALES TAX:

MARK UP: 115,762

GROUP # 010 Total: $ 716,545

ESTIMATE #: 739250P Project: WEST SEATTLE CSO 5.0 STORAGE w/PUMPS Date: 2-08-93 Time: 4:44 pm

Item	Description	Takeoff Quantity	T/O Unit	<-------Labor--------> MHrs/CHrs	Amount($)	Material Amount($)	Sub Amount($)	Equipment Amount($)	Total Amount($)
GRP # 365	RESERVOIR								
2.000	SITEWORK								
2.050	SITE DEMOLITION								
	Core for 36" Pipe	2.0	EA				15,150		15,150
	Core Drill for 24" Pipe	2.0	EA				2,000		2,000
2.100	SITE PREPARATION								
1001	Clear and Grub, Brush	48,000.0	SF				768		768
1003	Cut/Remove Tree, 6"-12"	12.0	EA	66.0	1,832			2,100	3,932
2.140	DEWATERING								
1402	Wellpoint,6" Dia/ Day	1,100.0	DY	28,050.0	778,668			245,575	1,024,243
2.150	SHORING								
	Tie-backs	77.0	EA				136,675		136,675

ESTIMATE #: 739250P Project: WEST SEATTLE CSO 5.0 STORAGE w/PUMPS Date: 2-08-93 Time: 4:44 pm

Item	Description	Takeoff Quantity	T/O Unit	<-------Labor--------> MHrs/CHrs	Amount($)	Material Amount($)	Sub Amount($)	Equipment Amount($)	Total Amount($)
Group Ph									
Descript									
GRP # 365	RESERVOIR								
									cont
2.000	SITEWORK								
									cont
2.220	EARTHWORK								
2206	Excav,966 Loader	5,325.0	CY	21.3	697			4,686	5,383
2215	Backfill,Native,966 Load	6,600.0	CY	1,848.0	60,467			13,002	73,469
2217	Backfill,Gravel,966 Load	1,175.0	CY	329.0	10,765	16,732		2,315	29,812
2230	Compaction,Wacker,8"Lift	7,775.0	CY	1,088.5	30,217			16,328	46,544
2238	Haul-off,17CY Trans,10 M	39,600.0	CY	6,454.8	211,201			157,212	368,413
2238	Haul-off,17CY Trans,10 M	5,325.0	CY	868.0	28,400			21,140	49,540
|	Clamshell Excavation	33,000.0	CY	8,811.0	288,296			287,100	575,396
|	Bring-in Backfill Mat'l.	6,600.0	CY				66,000		66,000
2.316	DRILLED PILES								
|	36" Auger Cast Pile	4,600.0	LF				285,200		285,200
2.500	PAVING/SURFACING								
2502	AC Paving,4" On 8" Base	9,200.0	SF				31,740		31,740
2.900	LANDSCAPING								
|	Landscaping, Allowance	38,800.0	SF				116,400		116,400
	CSI Division Subtotal:			47,536.6	$ 1,410,542	$ 16,732	$ 653,933	$ 749,458	$ 2,830,665
3.000	CONCRETE								
3.100	CONC FORMWORK								
1002	FIP,Col,12"Sq	19,000.0	SFCA	3,263.4	90,593	22,758		2,090	115,441
1020	FIP,Wall,Radial,Abv 16'H	63,300.0	SFCA	13,419.6	372,528	96,089		8,862	477,480
1031	FIP,SOG,To 12"H	3,000.0	SFCA	300.0	8,328	4,092		300	12,720
1033	FIP,Elev Slab, Abv 8'H	12,700.0	SF	2,819.4	78,267	66,453		1,397	146,116
1037	FIP,Conc Beams,Elev To 1	9,725.0	SFCA	2,334.0	64,792	54,465		107	119,364
3.150	VAPOR BARRIER								
1501	Visquin Water Barrier	12,700.0	SF	50.8	1,410	1,257			2,668
3.200	CONC REINF STL								
2001	Reinf,Sq Column	22,900.0	LB	297.7	10,568	8,061			18,629
2003	Reinf,Wall	685,000.0	LB	8,220.0	291,810	241,120			532,930
2004	Reinf,Elevated Slab	160,000.0	LB	1,120.0	39,760	56,320			96,080
2005	Reinf,SOG	250,000.0	LB	1,250.0	44,375	88,000			132,375
2007	Reinf, Conc Beam, To 16'	16,200.0	LB	259.2	9,202	5,702			14,904

ESTIMATE #: 739250P Project: WEST SEATTLE CSO 5.0 STORAGE w/PUMPS Date: 2-08-93 Time: 4:44 pm

Item	Description	Takeoff Quantity	T/O Unit	<-------Labor--------> MHrs/CHrs	Amount($)	Material Amount($)	Sub Amount($)	Equipment Amount($)	Total Amount($)
Group Ph									
Descript									
GRP # 365	RESERVOIR								
									cont
	3.000 CONCRETE								
									cont
	3.250 CONC ACCESSORIES								
2503	Hanger Inserts	57.0	EA	25.6	712	2,138			2,850
2521	Water Stop, PVC Bulb	2,650.0	LF	135.1	3,752	15,362			19,114
	3.300 CIP CONC, VIB								
3301	Column, Pumped	175.0	CY	236.3	6,558	9,464		875	16,897
3302	Wall, Pumped	6,225.0	CY	4,295.3	119,236	336,648		31,125	487,009
3303	Elev Slab, Pumped	1,175.0	CY	658.0	18,266	63,544		5,875	87,685
3304	SOG, Pumped	2,500.0	CY	1,275.0	35,394	135,200		12,500	183,094
3305	Elev Beam, Pumped	120.0	CY	79.2	2,199	6,490		600	9,288
	3.340 CONCRETE FINISH								
3401	Floor Finish	25,400.0	SF	355.6	9,871	11,095			20,966
3404	Wall Finish, Burlap	31,700.0	SFCA	634.0	17,600	1,902			19,502
3405	Sack/Patch Wall	15,800.0	SF	3,792.0	105,266	2,607			107,873
	CSI Division Subtotal:			44,820.2	$ 1,330,487	$ 1,228,767	$	$ 63,731	$ 2,622,984
	5.000 METALS								
	5.100 STRUCT STEEL								
5131	Misc Struct Stl	7,000.0	LB	77.0	2,734	5,366			8,099
	CSI Division Subtotal:			77.0	$ 2,734	$ 5,366	$	$	$ 8,099
	11.000 EQUIPMENT								
	11.100 PUMPS								
	1800 GPM Submersible Pum	4.0	EA	216.0	7,307	120,000			127,307
	Pump VFD	4.0	EA	80.0	2,706	72,000			74,706
	CSI Division Subtotal:			296.0	$ 10,014	$ 192,000	$	$	$ 202,014

ESTIMATE #: 739250P Project: WEST SEATTLE CSO 5.0 STORAGE w/PUMPS Date: 2-08-93 Time: 4:44 pm

Item	Description	Takeoff Quantity	T/O Unit	<-------Labor--------> MHrs/CHrs	Amount($)	Material Amount($)	Sub Amount($)	Equipment Amount($)	Total Amount($)
Group Ph									
Descript									
GRP # 365	RESERVOIR								
									cont
15.000	MECHANICAL								
15.050	STL PIPE/FIT								
1041	24" Sch40 Stl Pipe	140.0	LF	152.6	5,951	10,637			16,589
1061	24" Sch40 Stl 90	10.0	EA	4.2	164	14,159			14,323
1121	24"x Sch40 Stl Tee	2.0	EA	1.3	49	5,094			5,143
1141	24"x Sch40 Stl Red	2.0	EA	.8	33	2,443			2,476
15.060	DI PIPE/FITTINGS								
1029	24"DI Pipe,Conc Lined	10.0	LF	2.8	109	981			1,090
1031	36"DI Pipe,Conc Lined	10.0	LF	3.5	137	1,858			1,994
15.155	STL FLANGES								
1560	12" Stl Flg, 150#	28.0	EA	7.6	295	3,985			4,280
1565	24" Stl Flg, 150#	60.0	EA	22.8	889	38,311			39,200
15.160	PIPE CONNECTION								
1656	12" BU w Gasket	24.0	EA	43.2	1,685	396			2,081
1661	24" BU w Gasket	30.0	EA	90.0	3,510	3,267			6,777
1676	12" Stl BW	28.0	EA	117.6	4,586	134			4,721
1681	24" Stl BW	60.0	EA	900.0	35,100	576			35,676
15.170	MISC PIPE ITEMS								
	36" Pipe Penetration	2.0	EA	7.0	273	3,700			3,973
	24" Pipe Penetration	2.0	EA	6.0	232	2,200			2,432
15.190	VALVES								
1951	12" Check Valve	4.0	EA	62.0	2,418	7,800			10,218
1971	12" Plug Valve	4.0	EA	62.0	2,418	6,200			8,618
	CSI Division Subtotal:			1,483.3	$ 57,849	$ 101,741	$	$	$ 159,591
1 CHANICAL	Group Subtotal:			94,213.1	$ 2,811,626	$ 1,544,606	$ 653,933	$ 813,188	$ 5,823,353

SALES TAX:

MARK UP: 1,014,084

GROUP # 365 Total: $ 6,837,437

Drainage Basin: Alki/West Seattle **CSO Control Element:** 1.3 MG Circular Storage Facility (0.6 MGD P/S)

Revised: 1/5/95 **Alternative Description:** Eighth Avenue CSO Storage (Option 1)

Item Description	Quant.	Unit	Unit Cost	Total Cost
Concrete	2,063	CY	$360	$742,680
Temporary Sheeting and Shoring	19,200	SF	$11.0	$211,200
Excavation	19,113	CY	$14.0	$267,584
Backfill - Native	2,140	CY	$9.0	$19,260
Backfill - Imported	8,560	CY	$29.0	$248,243
Disposal of Excess Excavation	16,973	CY	$10.0	$169,730
Piling	0	LF	$16.5	$0
Street Restoration	1,440	SY	$56.5	$81,360
Utility Interference/Relocation	1,440	SY	$100	$144,000
Pumps, Associated Piping and Mechanical Equipment	1	LS	$71,768	$71,768
			SUBTOTAL:	**$1,955,825**
Aeration (3%)	1	LS	$58,675	$58,675
Mechanical Washdown System (5%)	1	LS	$97,791	$97,791
Odor Control (5%)	1	LS	$97,791	$97,791
Traffic Control	1	LS	$50,000	$50,000
Dewatering (2.5%)	1	LS	$48,896	$48,896
Mobilization/Demobilization (10%)	1	LS	$230,898	$230,898
Contractor's O & P (10%)	1	LS	$230,898	$230,898
ESTIMATED CONSTRUCTION COST:				**$2,770,773**
Contingency (On Estimated Construction Cost)			30%	$831,232
Sales Tax (On Construction Cost and Contingency)			8.2%	$295,364
TOTAL ESTIMATED CONSTRUCTION COST:				**$3,897,370**
Design and Owner Management			35%	$1,364,079
Property Acquisition (Inc. 30% Contingency & 15% Management)	9,655	SF	$10	$96,550
TOTAL PROJECT COST:				**$5,357,999**

CSO Control Alternative: Storage - Below Grade Circular Tank Storage
Data Input Form

Input Data in Shaded Cells

Req'd Storage Volume (MG)*	Storage Volume (CF)	Inside Diameter of Tank (FT)	Concrete				Piles (No.)
			Base Slab (CY)	Walls (CY)	Columns (CY)	Top Slab (CY)	
1.30	173,797	111	1182	292	28	561	
	0	0					

Req'd Storage Volume (MG)	Storage Volume (CF)	Inside Diameter of Tank (FT)	Excavation (SF)	Backfill (CY)	Backfill Native Mat'l (CY)	Backfill Imported Material (CY)	Haul Excess Material (CY)	Temporary Shoring (SF)
1.30	173,797	111	19113	10700	2140	8560	16973	19200

LAND USE CLASSIFICATION WHERE STORAGE IS LOCATED* 1

* 1=Residential, 2=Commercial/Industrial, and 3=Highrise/Downtown Business District

REQUIRED PUMP CAPACITY (MGD): 0.6

IS PILING REQUIRED?

Input 1 if piles are required, otherwise leave blank.

CSO Control Alternative: Storage - Below Grade Circular Tank Storage
Unit Cost Data Input Form

Input Data in Shaded Cells

	Quant.	Unit	Unit Cost	Total Cost
Storage Tank Construction				
Concrete - Slab on Grade	1182	CY	$300.0	$354,600
Concrete - Walls	292	CY	$450.0	$131,400
Concrete - Elevated Slab	561	CY	$450.0	$252,450
Concrete - Columns	28	CY	$450.0	$12,600
Common Excavation	19,113	CY	$14.0	$267,582
Backfill - Imported Material (Including Compaction)	8,560	CY	$29.0	$248,240
Backfill - Native Material (Including Compaction)	2,140	CY	$9.0	$19,260
Disposal of Excess Excavation	16,973	CY	$10.0	$169,730
Trench Support - Soldier Pile/Sheet	19,200	SF	$11.0	$211,200
Street/Surface Restoration				
Removal and Disposal of Asphalt	1,440	SY	$14.5	$20,880
6" Thick Base Course - Mineral Aggregate Type 2	1,440	SY	$5.5	$7,920
Pavement, Cem Conc CL 6 (1-1/2), 12"	N/A	SY	N/A	N/A
Pavement, Cem Conc CL 6 (1-1/2), 8" w/ 2" Asphalt Wearing Course	1,440	SY	$36.5	$52,560
Pumps, Associated Piping and Mechanical Equipment				
Pumps and Associated Piping	1	LS	$48,006	$48,006
Misc. Gates, Valves and Mech. Equip. (30% of Pumps and Piping Costs)	1	LS	14,402	$14,402
Electrical Systems Pertaining to Pump Systems	1	LS	$9,361	$9,361
Specialty Items - Description				
				$0
				$0

Drainage Basin: West Seattle/Alki **CSO Control Element:** Overflow Weir Structure for 42" Interceptor

Revised: 1/5/95 **Alternative Description:** Eighth Avenue CSO Storage (All Options)

Item Description	Quant.	Unit	Unit Cost	Total Cost
Concrete	57	CY	$400.0	$22,800
Temporary Sheeting and Shoring	2,469	SF	$11.0	$27,159
Excavation	387	CY	$14.0	$5,418
Backfill-Native	48	CY	$9.0	$432
Backfill - Imported	192	CY	$29.0	$5,568
Disposal of Excess Excavation	339	CY	$10.0	$3,390
Sluice Gates	1	EA	$0	$0
Street Restoration	57	SY	$56.5	$3,195
Demolish Existing Interceptor/Construct Temporary Bypass	1	LS	$10,355	$10,355
Traffic Control	1	LS	$50,000	$50,000
Utility Interference/Relocation	57	SY	$100.0	$5,654
Dewatering (2.5%)	1	LS	$3,349	$3,349
			SUBTOTAL:	**$137,320**
Mobilization/Demobilization (10%)	1	LS	$13,732	$13,732
Contractor's O & P (10%)	1	LS	$13,732	$13,732
			ESTIMATED CONSTRUCTION COST:	**$164,784**
			Contingency (On Estimated Construction Cost) 30%	$49,435
			Sales Tax (On Construction Cost and Contingency) 8.2%	$17,566
			TOTAL ESTIMATED CONSTRUCTION COST:	**$231,785**
			Design and Owner Management 35%	$81,125
			TOTAL PROJECT COST:	**$312,910**

CSO Control Alternative: Conveyance - CSO Control Structure
Data Input Form and Unit Cost Data Input Form

Input Data in Shaded Cells

Diameter of Interceptor (IN)	Concrete		
	Bottom Slab (CY)	Walls (CY)	Top Slab (CY)
42	18	27	12

Excavation (CY)	Backfill (CY)	Backfill Native Material (CY)	Backfill Imported Material (CY)	Haul Excess Material (CY)	Temporary Shoring (SF)	Street Restoration (SY)
387	240	48	192	339	2,469	57

LAND USE CLASSIFICATION WHERE CONTROL STRUCTURE IS LOCATED* 1

* 1=Residential, 2=Commercial/Industrial, and 3=Highrise/Downtown Business District

	Quant.	Unit	Unit Cost	Total Cost
Storage Tank Construction				
Concrete - Slab on Grade	18	CY	$300.0	$5,400
Concrete - Walls	27	CY	$450.0	$12,150
Concrete - Elevated Slab	12	CY	$450.0	$5,400
Common Excavation	387	CY	$14.0	$5,418
Backfill - Imported Material (Including Compaction)	192	CY	$29.0	$5,568
Backfill - Native Material (Including Compaction)	48	CY	$9.0	$432
Disposal of Excess Excavation	339	CY	$10.0	$3,390
Trench Support - Soldier Pile/Sheet	2,469	SF	$11.0	$27,159
Street/Surface Restoration				
Removal and Disposal of Asphalt	57	SY	$14.5	$827
6" Thick Base Course - Mineral Aggregate Type 2	57	SY	$5.5	$314
Pavement, Cem Conc CL 6 (1-1/2), 12"	0	SY	$0.0	$0
Pavement, Cem Conc CL 6 (1-1/2), 8" w/ 2" Asphalt Wearing Course	57	SY	$36.5	$2,081
Specialty Items - Description				
				$0
				$0

Drainage Basin: Alki/West Seattle **CSO Control Element:** 220 LF of 48-inch RCP (Cut and Cover) - 15' Ave. Invert Depth

Revised: 1/5/95 **Alternative Description:** Eighth Avenue CSO Storage (Option 1)

Item Description	Quant.	Unit	Unit Cost	Total Cost
48 -Inch Diameter RCP	220	LF	$355.0	$78,100
-Inch Diameter RCP		LF		$0
-Inch Diameter RCP		LF		$0
-Inch Diameter RCP		LF		$0
Street Restoration	440	SY	$56.0	$24,640
			SUBTOTAL:	**$102,740**
Mobilization/Demobilization (10%)	1	LS	$10,274.0	$10,274
Contractor's O & P (10%)	1	LS	$10,274.0	$10,274
			ESTIMATED CONSTRUCTION COST:	**$123,288**
Contingency (On Estimated Construction Cost)			30%	$36,986
Sales Tax (On Construction Cost and Contingency)			8.2%	$13,143
			TOTAL ESTIMATED CONSTRUCTION COST:	**$173,417**
Design and Owner Management			35%	$60,696
			TOTAL PROJECT COST:	**$234,113**

CSO Control Alternative: Conveyance - Construction of Combined Sewer
Data Input Form

Input Data in Shaded Cells

Linear Feet of New Combined Sewer

	Average Invert Depth (FT)	Paved Street Surface: Linear Feet of Pipe (FT)	Paved Street Surface: I.D. of Pipe (IN)	Paved Street Surface: Total Pipe Material & Install. Cost ($/LF)	Paved Street Surface: Estimated Street Restoration Width (FT)	Unpaved Street Surface: Linear Feet of Pipe (FT)	Unpaved Street Surface: I.D. of Pipe (IN)	Unpaved Street Surface: Total Pipe Material & Install. Cost ($/LF)	Traffic Control ($/LF)
			12	$122	12.0		12	$114	$4
			14	$123	12.0		15	$115	$4
			16	$126	12.0		18	$118	$4
			18	$129	12.0		21	$121	$4
			24	$138	12.0		24	$130	$8
			27	$149	12.0		27	$141	$8
			30	$159	12.0		30	$151	$8
			36	$167	12.0		36	$159	$8
			42	$184	12.0		42	$176	$8
	15.0	220	48	$355	18.0		48	$347	$12
			54	$271	12.0		54	$263	$12
			60	$304	12.0		60	$296	$12
			72	$360	12.0		72	$352	$12
			84	$424	12.0		84	$416	$16
			96	$499	12.0		96	$491	$16
Totals		220				0			

Excavation/Backfill Quantities Per Pipe Size

I.D. of Pipe (IN)	Average Invert Depth (FT)	Pipe Material Cost ($/LF)	Total Excavation per LF (CY/LF)	Bedding Volume Per LF (CY/LF)	Foundation Stabilizatior Material (CY/LF)	Backfill: Initial Backfill Per LF (CY/LF)	Backfill: Subsequent Backfill Per LF (CY/LF)	Disposal of Excess Excavation Per LF (CY/LF)	Filter Fabric Per LF (SY/LF)
12	0.0	$12.10	0.00	0.00	0.00	0.00	0.00	0.00	N/A
14	0.0	$13.40	0.00	0.00	0.00	0.00	0.00	0.00	N/A
16	0.0	$15.90	0.00	0.00	0.00	0.00	0.00	0.00	N/A
18	0.0	$19.10	0.00	0.00	0.00	0.00	0.00	0.00	N/A
24	0.0	$23.80	0.00	0.00	0.00	0.00	0.00	0.00	N/A
27	0.0	$31.50	0.00	0.00	0.00	0.00	0.00	0.00	N/A
30	0.0	$41.80	0.00	0.00	0.00	0.00	0.00	0.00	N/A
36	0.0	$49.80	0.00	0.00	0.00	0.00	0.00	0.00	N/A
42	0.0	$66.00	0.00	0.00	0.00	0.00	0.00	0.00	N/A
48	15.0	$80.80	4.61	0.42	0.35	0.42	1.33	2.96	N/A
54	0.0	$112.00	0.00	0.00	0.00	0.00	0.00	0.00	0.00
60	0.0	$145.00	0.00	0.00	0.00	0.00	0.00	0.00	0.00
72	0.0	$190.00	0.00	0.00	0.00	0.00	0.00	0.00	0.00
84	0.0	$250.00	0.00	0.00	0.00	0.00	0.00	0.00	0.00
96	0.0	$325.00	0.00	0.00	0.00	0.00	0.00	0.00	0.00

Land Use Classification Where Pipeline is Located: **1**

1=Residential, 2=Commercial/Industrial, and 3=Highrise/Downtown

CSO Control Alternative: Conveyance - Construction of New Combined Sewer
Unit Cost Data Input Form

Input Data in Shaded Cells

	Quant.	Unit	Unit Cost	Total Cost
Pipe Material and Installation				
Pipe Material	N/A	N/A	Variable	N/A
Common Excavation	1,013	CY	$14.0	$14,182
Pipe Bedding - Mineral Aggregate, Type 9	91	CY	$30.0	$2,730
Pipe Bedding - Controlled Density Fill	0	CY	$74.0	$0
Backfill - Imported Material (Including Compaction)	168	CY	$29.0	$4,872
Backfill - Native Material (Including Compaction)	293	CY	$9.0	$2,637
Disposal of Excess Excavation	652	CY	$10.0	$6,520
Filter Fabric	0	SY	$3.5	$0
Saw-Cut Cement Concrete, 2" Min. Thickness	220	LF	$8.0	$1,760
Service Connections	220	LF	$24.0	$5,280
Utility Relocation	220	LF	$30	$6,600
Dewater - Trench	220	LF	$20.0	$4,400
Trench Support - Box	220	LF	$18.0	$3,960
Trench Support - Soldier Pile/Sheet	0	SF	$11.0	$0
Street/Surface Restoration				
Removal and Disposal of Asphalt	440	SY	$14.0	$6,160
6" Thick Base Course - Mineral Aggregate Type 2	440	SY	$5.5	$2,420
Pavement, Cem Conc CL 6 (1-1/2), 12"	0	SY	$0.0	$0
Pavement, Cem Conc CL 6 (1-1/2), 8" w/ 2" Asphalt Wearing Course	440	SY	$36.5	$16,060
Specialty Items - Description				
				$0
				$0
				$0
				$0

Drainage Basin: Alki/West Seattle **CSO Control Element:** 370 LF of 8-inch Force Main - 15' Average Invert Depth

Revised: 1/5/95 **Alternative Description:** Eighth Avenue CSO Storage (Option 1)

Item Description	Quant.	Unit	Unit Cost	Total Cost
8 -Inch Diameter Force Main	370	LF	$171.0	$63,270
-Inch Diameter Force Main		LF		$0
-Inch Diameter Force Main		LF		$0
-Inch Diameter Force Main		LF		$0
Street Restoration	740	SY	$56.0	$41,440
			SUBTOTAL:	**$104,710**
Mobilization/Demobilization (10%)	1	LS	$10,471.0	$10,471
Contractor's O & P (10%)	1	LS	$10,471.0	$10,471
		ESTIMATED CONSTRUCTION COST:		**$125,652**
		Contingency (On Estimated Construction Cost)	30%	$37,696
		Sales Tax (On Construction Cost and Contingency)	8.2%	$13,395
		TOTAL ESTIMATED CONSTRUCTION COST:		**$176,742**
		Design and Owner Management	35%	$61,860
		TOTAL PROJECT COST:		**$238,602**

CSO Control Alternative: Conveyance - Construction of New Force Main
Data Input Form

Input Data in Shaded Cells

Linear Feet of New Force Main

	Paved Street Surface				Unpaved Street Surface			
Average Invert Depth (FT)	Linear Feet of Pipe (FT)	I.D. of Pipe (IN)	Total Pipe Material & Install. Cost ($/LF)	Estimated Street Restoration Width (FT)	Linear Feet of Pipe (FT)	I.D. of Pipe (IN)	Total Pipe Material & Install. Cost ($/LF)	Traffic Control ($/LF)
15.0	370	8	$171	18.0		12	$163	$4
		14	$126	12.0		15	$118	$4
		16	$132	12.0		18	$124	$4
		18	$143	12.0		21	$135	$4
		24	$168	12.0		24	$160	$8
		27	$181	12.0		27	$173	$8
		30	$195	12.0		30	$187	$8
		36	$223	12.0		36	$215	$8
		42	$253	12.0		42	$245	$8
		48	$289	12.0		48	$281	$12
		54	$347	12.0		54	$339	$12
		60	$404	12.0		60	$396	$12
		72	$494	12.0		72	$486	$12
		84	$618	12.0		84	$610	$16
		96	$768	12.0		96	$760	$16
Totals	370				0			

Excavation/Backfill Quantities Per Pipe Size

I.D. of Pipe (IN)	Average Invert Depth (FT)	Pipe Material Cost ($/LF)	Total Excavation per LF (CY/LF)	Bedding Volume Per LF (CY/LF)	Foundation Stabilization Material (CY/LF)	Backfill Initial Backfill Per LF (CY/LF)	Backfill Subsequent Backfill Per LF (CY/LF)	Disposal of Excess Excavation Per LF (CY/LF)	Filter Fabric Per LF (SY/LF)
8	15.0	$21.00	2.05	0.08	0.15	0.08	1.73	1.73	N/A
14	0.0	$46.00	0.00	0.00	0.00	0.00	0.00	0.00	N/A
16	0.0	$52.00	0.00	0.00	0.00	0.00	0.00	0.00	N/A
18	0.0	$63.00	0.00	0.00	0.00	0.00	0.00	0.00	N/A
24	0.0	$84.00	0.00	0.00	0.00	0.00	0.00	0.00	N/A
27	0.0	$97.00	0.00	0.00	0.00	0.00	0.00	0.00	N/A
30	0.0	$111.00	0.00	0.00	0.00	0.00	0.00	0.00	N/A
36	0.0	$139.00	0.00	0.00	0.00	0.00	0.00	0.00	N/A
42	0.0	$169.00	0.00	0.00	0.00	0.00	0.00	0.00	N/A
48	0.0	$201.00	0.00	0.00	0.00	0.00	0.00	0.00	N/A
54	0.0	$233.00	0.00	0.00	0.00	0.00	0.00	0.00	0.00
60	0.0	$290.00	0.00	0.00	0.00	0.00	0.00	0.00	0.00
72	0.0	$380.00	0.00	0.00	0.00	0.00	0.00	0.00	0.00
84	0.0	$500.00	0.00	0.00	0.00	0.00	0.00	0.00	0.00
96	0.0	$650.00	0.00	0.00	0.00	0.00	0.00	0.00	0.00

Land Use Classification Where Pipeline is Located: 1

1=Residential, 2=Commercial/Industrial, and 3=Highrise/Downtown

CSO Control Alternative: Conveyance - Construction of New Force Main
Unit Cost Data Input Form

Input Data in Shaded Cells

	Quant.	Unit	Unit Cost	Total Cost
Pipe Material and Installation				
Pipe Material	N/A	N/A	Variable	N/A
Common Excavation	758	CY	$14.0	$10,612
Pipe Bedding - Mineral Aggregate, Type 9	28	CY	$30.0	$840
Pipe Bedding - Controlled Density Fill	0	CY	$74.0	$0
Backfill - Imported Material (Including Compaction)	85	CY	$29.0	$2,465
Backfill - Native Material (Including Compaction)	640	CY	$9.0	$5,760
Filter Fabric	0	SY	$3.5	$0
Disposal of Excess Excavation	640	CY	$10.0	$6,400
Saw-Cut Cement Concrete, 2" Min. Thickness	370	LF	$8.0	$2,960
Utility Relocation	370	LF	$30	$11,100
Dewater - Trench	370	LF	$20.0	$7,400
Trench Support - Box	370	LF	$18.0	$6,660
Trench Support - Soldier Pile/Sheet	0	SF	$11.0	$0
Street/Surface Restoration				
Removal and Disposal of Asphalt	740	SY	$14.0	$10,360
6" Thick Base Course - Mineral Aggregate Type 2	740	SY	$5.5	$4,070
Pavement, Cem Conc CL 6 (1-1/2), 12"	0	SY	$0.0	$0
Pavement, Cem Conc CL 6 (1-1/2), 8" w/ 2" Asphalt Wearing Course	740	SY	$36.5	$27,010
Specialty Items - Description				
				$0
				$0
				$0
				$0

Drainage Basin: Waterfront/Industrial **CSO Control Element:** Junction Chamber for 10", 24", and 30" Interceptor

Revised: 1/5/95 **Description:** Southwest Michigan Street Regulator

Item Description	Quant.	Unit	Unit Cost	Total Cost
Concrete	21	CY	$410.0	$8,610
Temporary Sheeting and Shoring	1,403	SF	$11.0	$15,433
Excavation	153	CY	$14.0	$2,142
Backfill-Native	22	CY	$9.0	$198
Backfill - Imported	86	CY	$29.0	$2,494
Disposal of Excess Excavation	131	CY	$10.0	$1,310
Sluice Gates	1	EA	$41,000	$41,000
Street Restoration	26	SY	$56.5	$1,487
Demolish Existing Interceptor/Construct Temporary Bypass	1	LS	$3,700	$3,700
Traffic Control	1	LS	$50,000	$50,000
Utility Interference/Relocation	26	SY	$100.0	$2,633
Dewatering (2.5%)	1	LS	$3,225	$3,225
			SUBTOTAL:	**$132,232**
Mobilization/Demobilization (10%)	1	LS	$13,223	$13,223
Contractor's O & P (10%)	1	LS	$13,223	$13,223
			ESTIMATED CONSTRUCTION COST:	**$158,679**
			Contingency (On Estimated Construction Cost) 30%	$47,604
			Sales Tax (On Construction Cost and Contingency) 8.2%	$16,915
			TOTAL ESTIMATED CONSTRUCTION COST:	**$223,197**
			Design and Owner Management 35%	$78,119
			TOTAL PROJECT COST:	**$301,316**

CSO Control Alternative: Conveyance - CSO Control Structure
Data Input Form and Unit Cost Data Input Form

Input Data in Shaded Cells

Diameter of Interceptor (IN)	Concrete		
	Bottom Slab (CY)	Walls (CY)	Top Slab (CY)
24	6	11	4

Excavation (CY)	Backfill (CY)	Backfill Native Material (CY)	Backfill Imported Material (CY)	Haul Excess Material (CY)	Temporary Shoring (SF)	Street Restoration (SY)
153	108	22	86	131	1,403	26

LAND USE CLASSIFICATION WHERE CONTROL STRUCTURE IS LOCATED* 1

* 1=Residential, 2=Commercial/Industrial, and 3=Highrise/Downtown Business District

	Quant.	Unit	Unit Cost	Total Cost
Storage Tank Construction				
Concrete - Slab on Grade	6	CY	$300.0	$1,800
Concrete - Walls	11	CY	$450.0	$4,950
Concrete - Elevated Slab	4	CY	$450.0	$1,800
Common Excavation	153	CY	$14.0	$2,142
Backfill - Imported Material (Including Compaction)	86	CY	$29.0	$2,494
Backfill - Native Material (Including Compaction)	22	CY	$9.0	$198
Disposal of Excess Excavation	131	CY	$10.0	$1,310
Trench Support - Soldier Pile/Sheet	1,403	SF	$11.0	$15,433
Street/Surface Restoration				
Removal and Disposal of Asphalt	26	SY	$14.5	$377
6" Thick Base Course - Mineral Aggregate Type 2	26	SY	$5.5	$143
Pavement, Cem Conc CL 6 (1-1/2), 12"	0	SY	$0.0	$0
Pavement, Cem Conc CL 6 (1-1/2), 8" w/ 2" Asphalt Wearing Course	26	SY	$36.5	$949
Specialty Items - Description				
				$0
				$0

Drainage Basin: Waterfront/Industrial **CSO Control Element:** 50 LF of 30" RCP w/ 96" Diameter Manhole (15' Deep)

Revised: 1/5/95 **Alternative Description:** Southwest Michigan Street Regulator

Item Description	Quant.	Unit	Unit Cost	Total Cost
30 -Inch Diameter RCP	50	LF	$196.0	$9,800
-Inch Diameter RCP		LF		$0
-Inch Diameter RCP		LF		$0
-Inch Diameter RCP		LF		$0
Street Restoration	100	SY	$56.0	$5,600
Manhole - 96-inch Diameter, 15' Depth	1	EA	$5,645.0	$5,645
			SUBTOTAL:	**$21,045**
Mobilization/Demobilization (10%)	1	LS	$2,104.5	$2,105
Contractor's O & P (10%)	1	LS	$2,104.5	$2,105
		ESTIMATED CONSTRUCTION COST:		**$25,254**
		Contingency (On Estimated Construction Cost)	30%	$7,576
		Sales Tax (On Construction Cost and Contingency)	8.2%	$2,692
		TOTAL ESTIMATED CONSTRUCTION COST:		**$35,522**
		Design and Owner Management	35%	$12,433
		TOTAL PROJECT COST:		**$47,955**

CSO Control Alternative: Conveyance - Construction of Combined Sewer
Data Input Form

Input Data in Shaded Cells

Linear Feet of New Combined Sewer

	Average Invert Depth (FT)	Paved Street Surface: Linear Feet of Pipe (FT)	Paved Street Surface: I.D. of Pipe (IN)	Paved Street Surface: Total Pipe Material & Install. Cost ($/LF)	Paved Street Surface: Estimated Street Restoration Width (FT)	Unpaved Street Surface: Linear Feet of Pipe (FT)	Unpaved Street Surface: I.D. of Pipe (IN)	Unpaved Street Surface: Total Pipe Material & Install. Cost ($/LF)	Traffic Control ($/LF)
			12	$98	12.0		12	$90	$4
			14	$99	12.0		15	$91	$4
			16	$102	12.0		18	$94	$4
			18	$105	12.0		21	$97	$4
			24	$114	12.0		24	$106	$8
			27	$125	12.0		27	$117	$8
	8.0	50	30	$196	18.0		30	$188	$8
			36	$143	12.0		36	$135	$8
			42	$160	12.0		42	$152	$8
			48	$190	12.0		48	$182	$12
			54	$247	12.0		54	$239	$12
			60	$280	12.0		60	$272	$12
			72	$336	12.0		72	$328	$12
			84	$400	12.0		84	$392	$16
			96	$475	12.0		96	$467	$16
Totals		50				0			

Excavation/Backfill Quantities Per Pipe Size

I.D. of Pipe (IN)	Average Invert Depth (FT)	Pipe Material Cost ($/LF)	Total Excavation per LF (CY/LF)	Bedding Volume Per LF (CY/LF)	Foundation Stabilization Material (CY/LF)	Backfill: Initial Backfill Per LF (CY/LF)	Backfill: Subsequent Backfill Per LF (CY/LF)	Disposal of Excess Excavation Per LF (CY/LF)	Filter Fabric Per LF (SY/LF)
12	0.0	$12.10	0.00	0.00	0.00	0.00	0.00	0.00	N/A
14	0.0	$13.40	0.00	0.00	0.00	0.00	0.00	0.00	N/A
16	0.0	$15.90	0.00	0.00	0.00	0.00	0.00	0.00	N/A
18	0.0	$19.10	0.00	0.00	0.00	0.00	0.00	0.00	N/A
24	0.0	$23.80	0.00	0.00	0.00	0.00	0.00	0.00	N/A
27	0.0	$31.50	0.00	0.00	0.00	0.00	0.00	0.00	N/A
30	8.0	$41.80	1.86	0.22	0.24	0.22	0.48	1.00	N/A
36	0.0	$49.80	0.00	0.00	0.00	0.00	0.00	0.00	N/A
42	0.0	$66.00	0.00	0.00	0.00	0.00	0.00	0.00	N/A
48	0.0	$80.80	0.00	0.00	0.00	0.00	0.00	0.00	N/A
54	0.0	$112.00	0.00	0.00	0.00	0.00	0.00	0.00	0.00
60	0.0	$145.00	0.00	0.00	0.00	0.00	0.00	0.00	0.00
72	0.0	$190.00	0.00	0.00	0.00	0.00	0.00	0.00	0.00
84	0.0	$250.00	0.00	0.00	0.00	0.00	0.00	0.00	0.00
96	0.0	$325.00	0.00	0.00	0.00	0.00	0.00	0.00	0.00

Land Use Classification Where Pipeline Is Located: 1

1=Residential, 2=Commercial/Industrial, and 3=Highrise/Downtown

CSO Control Alternative: Conveyance - Construction of New Combined Sewer
Unit Cost Data Input Form

Input Data in Shaded Cells

	Quant.	Unit	Unit Cost	Total Cost
Pipe Material and Installation				
Pipe Material	N/A	N/A	Variable	N/A
Common Excavation	93	CY	$14.0	$1,302
Pipe Bedding - Mineral Aggregate, Type 9	11	CY	$30.0	$330
Pipe Bedding - Controlled Density Fill	0	CY	$74.0	$0
Backfill - Imported Material (Including Compaction)	23	CY	$29.0	$667
Backfill - Native Material (Including Compaction)	24	CY	$9.0	$216
Disposal of Excess Excavation	50	CY	$10.0	$500
Filter Fabric	0	SY	$3.5	$0
Saw-Cut Cement Concrete, 2" Min. Thickness	50	LF	$8.0	$400
Service Connections	50	LF	$0.0	$0
Utility Relocation	50	LF	$30	$1,500
Dewater - Trench	50	LF	$20.0	$1,000
Trench Support - Box	50	LF	$18.0	$900
Trench Support - Soldier Pile/Sheet	0	SF	$11.0	$0
Street/Surface Restoration				
Removal and Disposal of Asphalt	100	SY	$14.0	$1,400
6" Thick Base Course - Mineral Aggregate Type 2	100	SY	$5.5	$550
Pavement, Cem Conc CL 6 (1-1/2), 12"	0	SY	$0.0	$0
Pavement, Cem Conc CL 6 (1-1/2), 8" w/ 2" Asphalt Wearing Course	100	SY	$36.5	$3,650
Specialty Items - Description				
Manhole - 96-inch Diameter, 15' Depth	1	EA	$5,645.0	$5,645
				$0
				$0
				$0

APPENDIX F

Norfolk Basin
CSO Control Alternatives

MLK Way CSO Storage
MLK Way Separation
S. Henderson St. Pump Station CSO Storage
S. Henderson St. Weir Adjustment
S. Henderson St. Separation
Norfolk Regulator CSO Storage

METRO CSO 5-YEAR UPDATE
ALTERNATIVE INFORMATION SUMMARY

Alternative Name: Henderson St. Separation

Alternative Type: (e.g., treatment, conveyance, separation) Separation

Affected CSOs:

CSO Name	Annual Base Volume, mg	Annual 1996 Volume, mg	Storm No. 6 1996 Volume, mg	Storm No. 6 Peak Rate, mgd
Henderson	26.0	26.0 (26.0)	13.7 (13.7)	

*Values in parentheses are with West Point set point at 440 mgd.

Alternative Description:

This alternative will result in the reduction of inflow and infiltration into the system. In this alternative, roof top drainage from an estimated 1300 dwelling units in the tributary area would be disconnected from the building sewers and conveyed to the adjacent street in new side sewers. At the same time, the joint of the building sewer at the main sewer in the street and the vertical bend near the surface where the building sewer enters private property, where most of the infiltration occurs, would be rehabilitated.

Major problems/barriers/issues to be resolved: (e.g., permitting, optimization)

Major issues associated with this alternative include administering the program for converting roof drains.

Capital Cost (1994 $): $ 4.2 million (Attach cost summary spreadsheet and detailed cost estimates.)

Briefly describe the alternative's characteristics in each of the following categories:

CATEGORY	CHARACTERISTICS
Impact on Natural Environment	This alternative will affect receiving water quality by reducing the discharge of untreated sanitary sewage to surface water.
Impact on Social Environment	This alternative will result in some off-road neighborhood disruption.
Impact on Public Health and Safety	Possible slight negative safety impacts due to construction. Public health impacts equivalent to all other 1-year CSO reduction alternatives.
Fairness and Equity	Perceived negative effects will be temporary, during construction.
Economic Impacts	The capital cost of this alternative is ~~$13.8~~ $4.2 million.
Flexibility	This alternative does not preclude the reduction of CSOs through other management alternatives.

METRO CSO 5-YEAR UPDATE
ALTERNATIVE INFORMATION SUMMARY

Alternative Name: Martin Luther King Way Overflow

Alternative type: (e.g., treatment, conveyance, separation) Off-line Storage

Affected CSOs:

CSO Name	Annual Base Volume, mg	Annual 1996 Volume, mg	Storm No. 6 1996 Volume, mg	Storm No. 6 Peak Rate, mgd
MLK	88.0	88	6.2	63.3

Alternative Description: (Attach map showing layout of alternative and details as necessary.)

This alternative consists of a CSO flow control structure on the 48-inch sewer running along 42nd Avenue S., a 6.2 million gallon off-line storage facility, a 6.2 million gallon pumpstation, and associated piping. The CSO flow control structure is located approximately 70 feet north of the intersection with S. Trenton Street. Excess flow is conveyed by gravity in a 48-inch pipe a distance of approximately 280 feet to a storage tank. The invert elevation of the overflow pipe at the CSO flow control structure is approximately 49 feet.

Storage is provided in a 6.2 million gallon off-line storage tank. The storage tank is approximately 160 feet wide by 300 feet long, with a water depth of 17.5 feet. The storage tank is situated west of Martin Luther King Way partially within a power transmission line right-of-way. The storage tank is equipped with an overflow weir to pass CSO flows exceeding the tank capacity. The overflow weir is gravity drained by a 48-inch pipe to a 60-inch storm sewer located on S. Henderson Street. The weir is at an elevation of approximately 41 feet and the overflow pipe is approximately 480 feet long.

The storage tank is emptied by a 6.2 MGD submersible pump station into the existing, 480-foot long, 48-inch sewer on S. Henderson Street when excess capacity exists in the sewer system. The 12-inch forcemain from the pump station lies in the Martin Luther King Way right-of-way in the same trench as the storage tank overflow pipe.

Major problems/barriers/issues to be resolved: (e.g., permitting, optimization)

Major issues associated with this alternative include property purchase / easement and work within the electric utility easement.

Capital Cost (1994 $): $27 million (Attach cost summary spreadsheet and detailed cost estimates.)

Briefly describe the alternative's characteristics in each of the following categories:

CATEGORY	CHARACTERISTICS
Impact on Natural Environment	This alternative will have minor impact on the natural environment near the storage facility. There will be a benefit to the water quality of Lake Washington due to the reduction and treatment of CSO.
Impact on Social Environment	Construction of this alternative will cause temporary disruption of local traffic on Martin Luther King Way and S. Trenton Street. Construction of the storage vault will disturb the residences along S. Trenton Street and and 42nd Avenue S. Storage tanks may generate some odor when odor control facilities are not operating properly.
Impact on Public Health and Safety	Possible slight negative safety impacts due to traffic impacts during construction.
Fairness and Equity	Will place one storage tank in the Martin Luther King Way corrider. This area currently bears little burden of public facilities with perceived possible negative impacts.
Economic Impacts	This alternative is estimated to cost $29 million in capital costs to meet the design storm overflow volume.
Flexibility	This option is relatively inflexible with regard to future expansion., with the exception of separation for additional CSO reduction.
Degree of Conformance with Growth Management Act	N/A

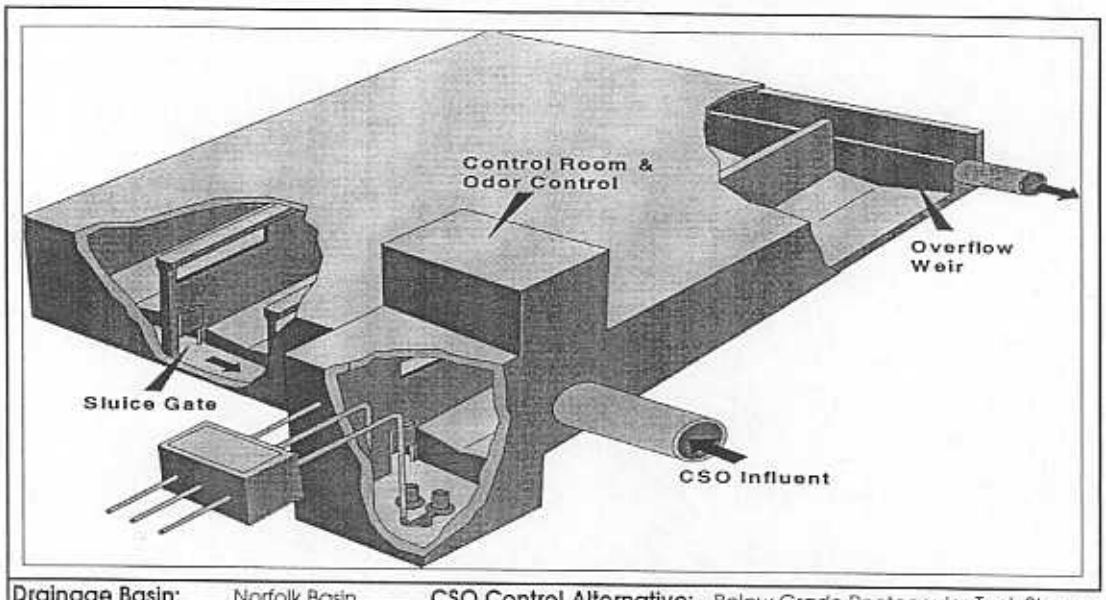

Drainage Basin: Norfolk Basin

CSO Control Alternative: Below Grade Rectangular Tank Storage

Location: MLK Way Overflow

ENR 5630 for estimate

Sizing: 6.2 MG

Item Description	Quantity	Unit	Unit Cost	Total Cost
Concrete	13,670	CY	$374.4	$5,118,000
Temporary Sheeting and Shoring	41,300	SF	$11.0	$454,300
Excavation	67,710	CY	$14.0	$947,940
Backfill-Native	4,140	CY	$9.0	$37,260
Backfill - Imported	16,560	CY	$29.0	$480,240
Disposal of Excess Excavation	63,570	CY	$10.0	$635,700
Piling	0	LF	$16.5	$0
Sluice Gates	7	EA	$50,000.0	$350,000
Drainage Pumps and Assoc. Mech./Elect. Equip.	1	LS		$270,131
Street Restoration	7,600	SY	$60.0	$456,000
Utility Interference/Relocation	7,600	SY	$100.0	$760,000
Specialty Items				$0
			Subtotal	**$9,509,571**
Miscellaneous Mechanical/Washdown System	1	LS	5.0%	$475,479
Aeration	1	LS	3.0%	$285,287
Landscaping	1	LS	2.5%	$237,739
Odor Control	1	LS	5.0%	$475,479
Traffic Control	1	LS	$50,000	$50,000
Dewatering	1	LS	2.5%	$237,739
Mobilization/Demobilization	1	LS	10.0%	$1,127,129
Contractor's O & P	1	LS	10.0%	$1,127,129
			Subtotal	**$13,525,553**
Contingency			30%	$4,057,666
Sales Tax			8.2%	$1,441,824
		ESTIMATED CONSTRUCTION COST		**$19,025,043**
Design and Owner Management			35%	$6,658,765
Property Acquisition	75000	SF	$17	$1,275,000
Conveyance: Regulator for 48-inch trunk				$484,089
400-ft of 12-inch forcemain				$281,646
750-ft of 48-inch RCP influent/overflow				$844,255
		TOTAL PROJECT COST		**$28,570,000**

CSO Control Alternative: Storage - Below Grade Rectangular Tank Storage
Data Input Form and Unit Cost Data Input Form

Input Data In Shaded Cells

Assumptions

Cover Depth, ft	1.5		Over Excavation	
Side Water Depth, ft	15		Bottom	5 ft
Top Slab, ft	1.5		Sides	5 ft
Bottom Slab, ft	3		Wall Thickness	
Freeboard, ft	1		Exterior	2 ft
Length/Width Ratio	3		Interior	1.25 ft
Target Stage Width, ft	20		Tank Width	147 ft
Actual Stage Width, ft	19.4		Tank Length	420 ft
			Excavation Depth	27 ft

Calculated Quantities

Req'd Storage Volume (MG)	Concrete Base Slab (CY)	Concrete Walls (CY)	Concrete Top Slab (CY)	Req'd N Piles (No.)	Sluice Gates (ea)	Hours Req'd to Drain Tank
6.2	6,890	3,330	3,450	0	7	24

Req'd Storage Volume (MG)	Excavation (CY)	Backfill (CY)	Backfill Native Mat'l (CY)	Backfill Imported Material (CY)	Haul Excess Material (CY)	Temporary Shoring (SF)	Y Street Restoration (SY)
6.2	67,710	20,700	4,140	16,560	63,570	41,300	7,600

LAND USE CLASSIFICATION WHERE STORAGE IS LOCATED* 2

* 1=Residential, 2=Commercial/Industrial, and 3=Highrise/Downtown Business District

Estimated Costs

ENR Basis 5630

	Quantity	Unit	Unit Cost	Total Cost
Storage Tank Construction				
Concrete - Slab on Grade	6890	CY	$300.0	$2,067,000
Concrete - Walls	3330	CY	$450.0	$1,498,500
Concrete - Elevated Slab	3450	CY	$450.0	$1,552,500
Common Excavation	67,710	CY	$14.0	$947,940
Backfill - Imported Material (Including Compaction)	16,560	CY	$29.0	$480,240
Backfill - Native Material (Including Compaction)	4,140	CY	$9.0	$37,260
Disposal of Excess Excavation	63,570	CY	$10.0	$635,700
Trench Support - Soldier Pile/Sheet	41,300	SF	$11.0	$454,300
Street/Surface Restoration				
Removal and Disposal of Asphalt	7,600	SY	$14.5	$110,200
6" Thick Base Course - Mineral Aggregate Type 2	7,600	SY	$5.5	$41,800
Pavement, Cem Conc CL 6 (1-1/2), 12"	7,600	SY	$40.0	$304,000
Pavement, Cem Conc CL 6 (1-1/2), 8" w/ 2" Asphalt Wearing Course	0	SY	$0.0	$0
Pumps, Associated Piping and Mechical/Electrical Equipment				
Pumps and Associated Piping	6.2	MGD		$180,690
Misc. Mechanical Equipment	1	LS	30.0%	$54,207
Electrical Systems	1	LS	15.0%	$35,235
Specialty Items - Description				
Regulator Station		LS	$310,000	$0
Connecting Conduit 72-inch		FT	$1,415.0	$0
				$0

METRO CSO 5-YEAR UPDATE
ALTERNATIVE INFORMATION SUMMARY

Alternative Name: Henderson St. Storage Facility

Alternative Type: (e.g., treatment, conveyance, separation) Storage

Affected CSOs:

CSO Name	Annual Base Volume, mg	Annual 1996 Volume, mg	Storm No. 6 1996 Volume, mg	Storm No. 6 Peak Rate, mgd
Henderson	26.0	26.0 (26.0)	13.7 (13.7)	

*Values in parentheses are with West Point set point at 440 mgd.

Alternative Description:

This alternative includes 1000 feet of 30-inch gravity sewer, 2700 feet of 22-inch force main, and a 1.25 ~~3~~ MG off-line underground tank storage facility.

The existing Henderson St. emergency relief structure will be modified so that flow will be diverted into the 30-inch gravity sewer located within Henderson St. Flow will enter the ~~[illegible]~~ 1.25 MG offline storage tank which will be located beneath the playground and running track west of the Rainier High School buildings. The tank will fill by gravity and will be emptied by a ~~7 MGD~~ 0.6 mgd submersible pump station, which will convey flow via a ~~1~~2-inch force main to an existing 60-inch trunk line at the intersection of Henderson St. and Martin Luther King Way. The force main will be located within Henderson St.

Major problems/barriers/issues to be resolved: (e.g., permitting, optimization)

Major issues associated with this alternative include negotiating with the high school administration to obtain use of the tank site, disruption to the school playgrounds for approximately 6 months, and traffic disruption on Henderson St. in front of the high school.

Capital Cost (1994 $): ~~$[illegible]~~ $8.2 million (Attach cost summary spreadsheet and detailed cost estimates.)

Briefly describe the alternative's characteristics in each of the following categories:

CATEGORY	CHARACTERISTICS
Impact on Natural Environment	This alternative will affect receiving water quality by reducing the discharge of untreated sanitary sewage to surface water.
Impact on Social Environment	This alternative will result in a several month closure of the Rainier Beach High School playground and running track, as well as traffic disruption on the streets surrounding the school.
Impact on Public Health and Safety	Possible slight negative safety impacts due to traffic impacts during construction. Public health impacts equivalent to all other 1-year CSO reduction alternatives.
Fairness and Equity	The temporary closure of several of the school's recreational facilities will be regarded negatively by the community.
Economic Impacts	The capital cost of this alternative is ~~$57.3~~ million. $8.2
Flexibility	This alternative provides flexibility for future separation of CSOs within the drainage basin.

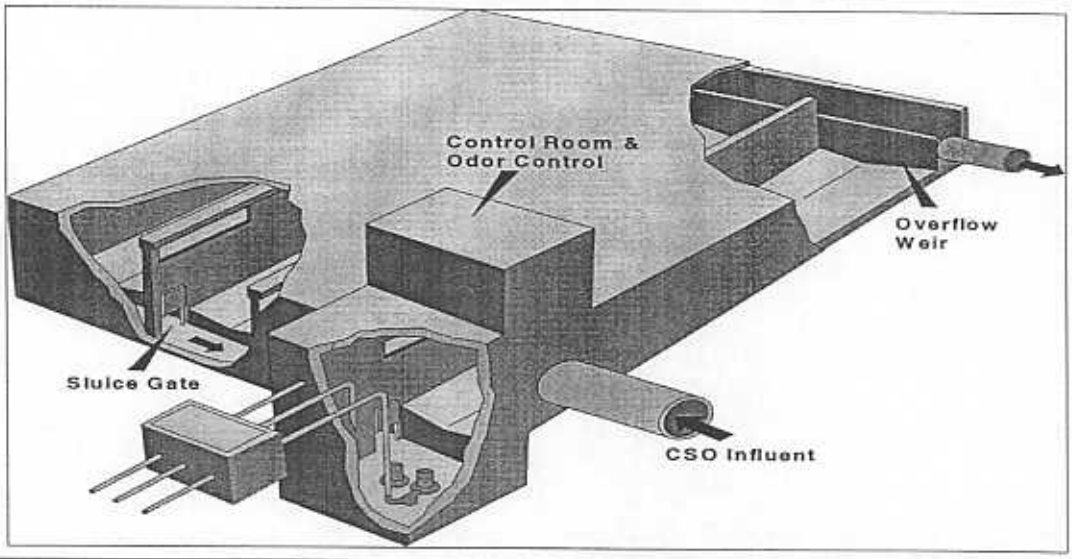

Drainage Basin: Norfolk Basin **CSO Control Alternative:** Below Grade Rectangular Tank Storage

Location: Henderson St. Storage

ENR 5630 for estimate **Sizing:** 1.3 MG

Item Description	Quantity	Unit	Unit Cost	Total Cost
Concrete	3,360	CY	$383.0	$1,287,000
Temporary Sheeting and Shoring	20,400	SF	$11.0	$224,400
Excavation	16,520	CY	$14.0	$231,280
Backfill-Native	1,270	CY	$9.0	$11,430
Backfill - Imported	5,080	CY	$29.0	$147,320
Disposal of Excess Excavation	15,250	CY	$10.0	$152,500
Piling	0	LF	$16.5	$0
Sluice Gates	4	EA	$50,000.0	$200,000
Drainage Pumps and Assoc. Mech./Elect. Equip.	1	LS		$72,661
Street Restoration	0	SY	$60.0	$0
Utility Interference/Relocation	1,800	SY	$100.0	$180,000
Specialty Items				$0
			Subtotal	**$2,506,591**
Miscellaneous Mechanical/Washdown System	1	LS	5.0%	$125,330
Aeration	1	LS	3.0%	$75,198
Landscaping	1	LS	2.5%	$62,665
Odor Control	1	LS	5.0%	$125,330
Traffic Control	1	LS	$50,000	$50,000
Dewatering	1	LS	2.5%	$62,665
Mobilization/Demobilization	1	LS	10.0%	$300,778
Contractor's O & P	1	LS	10.0%	$300,778
			Subtotal	**$3,609,334**
Contingency			30%	$1,082,800
Sales Tax			8.2%	$384,755
	ESTIMATED CONSTRUCTION COST			**$5,076,889**
Design and Owner Management			35%	$1,776,911
Property Acquisition	18000	SF	$17	$306,000
	TOTAL PROJECT COST			**$7,160,000**

CSO Control Alternative: Storage - Below Grade Rectangular Tank Storage
Data Input Form and Unit Cost Data Input Form

Input Data in Shaded Cells

Assumptions

Cover Depth, ft	2		Over Excavation	
Side Water Depth, ft	15		Bottom	5 ft
Top Slab, ft	1.5		Sides	5 ft
Bottom Slab, ft	3		Wall Thickness	
Freeboard, ft	1		Exterior	2 ft
Length/Width Ratio	3		Interior	1.25 ft
Target Stage Width, ft	20		Tank Width	69 ft
Actual Stage Width, ft	15.3		Tank Length	195 ft
			Excavation Depth	27.55 ft

Calculated Quantities

Req'd Storage Volume (MG)	Concrete: Base Slab (CY)	Concrete: Walls (CY)	Concrete: Top Slab (CY)	Req'd N Piles (No.)	Sluice Gates (ea)	Hours Req'd to Drain Tank
1.3	1,500	1,110	750	0	4	48

Req'd Storage Volume (MG)	Excavation (CY)	Backfill (CY)	Backfill Native Mat'l (CY)	Backfill Imported Material (CY)	Haul Excess Material (CY)	Temporary Shoring (SF)	N Street Restoration (SY)
1.3	16,520	6,350	1,270	5,080	15,250	20,400	0

LAND USE CLASSIFICATION WHERE STORAGE IS LOCATED* 2

* 1=Residential, 2=Commercial/Industrial, and 3=Highrise/Downtown Business District

Estimated Costs

ENR Basis 5630	Quantity	Unit	Unit Cost	Total Cost
Storage Tank Construction				
Concrete - Slab on Grade	1500	CY	$300.0	$450,000
Concrete - Walls	1110	CY	$450.0	$499,500
Concrete - Elevated Slab	750	CY	$450.0	$337,500
Common Excavation	16,520	CY	$14.0	$231,280
Backfill - Imported Material (Including Compaction)	5,080	CY	$29.0	$147,320
Backfill - Native Material (Including Compaction)	1,270	CY	$9.0	$11,430
Disposal of Excess Excavation	15,250	CY	$10.0	$152,500
Trench Support - Soldier Pile/Sheet	20,400	SF	$11.0	$224,400
Street/Surface Restoration				
Removal and Disposal of Asphalt	0	SY	$14.5	$0
6" Thick Base Course - Mineral Aggregate Type 2	0	SY	$5.5	$0
Pavement, Cem Conc CL 6 (1-1/2), 12"	0	SY	$40.0	$0
Pavement, Cem Conc CL 6 (1-1/2), 8" w/ 2" Asphalt Wearing Course	0	SY	$0.0	$0
Pumps, Associated Piping and Mechical/Electrical Equipment				
Pumps and Associated Piping	0.6	MGD		$48,603
Misc. Mechanical Equipment	1	LS	30.0%	$14,581
Electrical Systems	1	LS	15.0%	$9,478
Specialty Items - Description				
Regulator Station		LS	$310,000	$0
Connecting Conduit 72-inch		FT	$1,415.0	$0
				$0

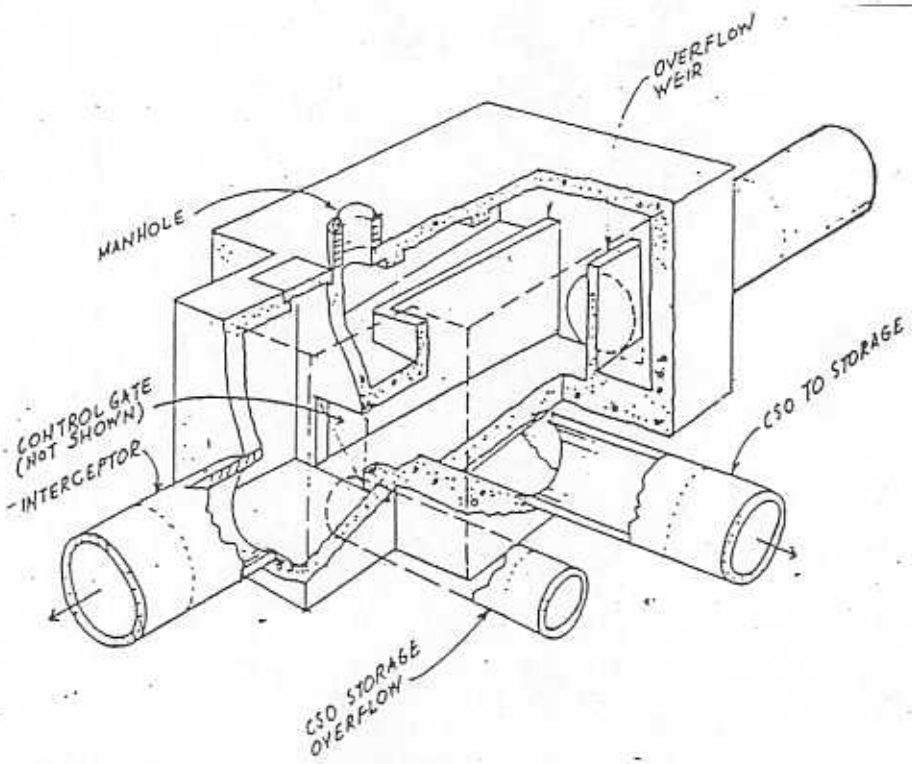

Drainage Basin: Waterfront/Industrial **CSO Control Element:** Flow Regulator Structure for 30" Interceptor

Revised: 5/3/94 **Alternative Description:** Henderson Street CSO - Storage

Item Description	Quant.	Unit	Unit Cost	Total Cost
Concrete	32	CY	$410.0	$13,120
Temporary Sheeting and Shoring	1,757	SF	$11.0	$19,327
Excavation	221	CY	$14.0	$3,094
Backfill-Native	30	CY	$9.0	$270
Backfill - Imported	119	CY	$29.0	$3,451
Disposal of Excess Excavation	191	CY	$10.0	$1,910
Sluice Gates	1	EA	$44,000	$44,000
Street Restoration	36	SY	$60.0	$2,142
Demolish Existing Interceptor/Construct Temporary Bypass	1	LS	$5,577	$5,577
Traffic Control	1	LS	$50,000	$50,000
Utility Interference/Relocation	36	SY	$100.0	$3,571
Dewatering (2.5%)	1	LS	$3,662	$3,662
			SUBTOTAL:	**$150,124**
Mobilization/Demobilization (10%)	1	LS	$15,012	$15,012
Contractor's O & P (10%)	1	LS	$15,012	$15,012
			ESTIMATED CONSTRUCTION COST:	**$180,149**
Contingency (On Estimated Construction Cost)			30%	$54,045
Sales Tax (On Construction Cost and Contingency)			8.2%	$19,204
			TOTAL ESTIMATED CONSTRUCTION COST:	**$253,397**
Design and Owner Management			35%	$88,689
			TOTAL PROJECT COST:	**$342,086**

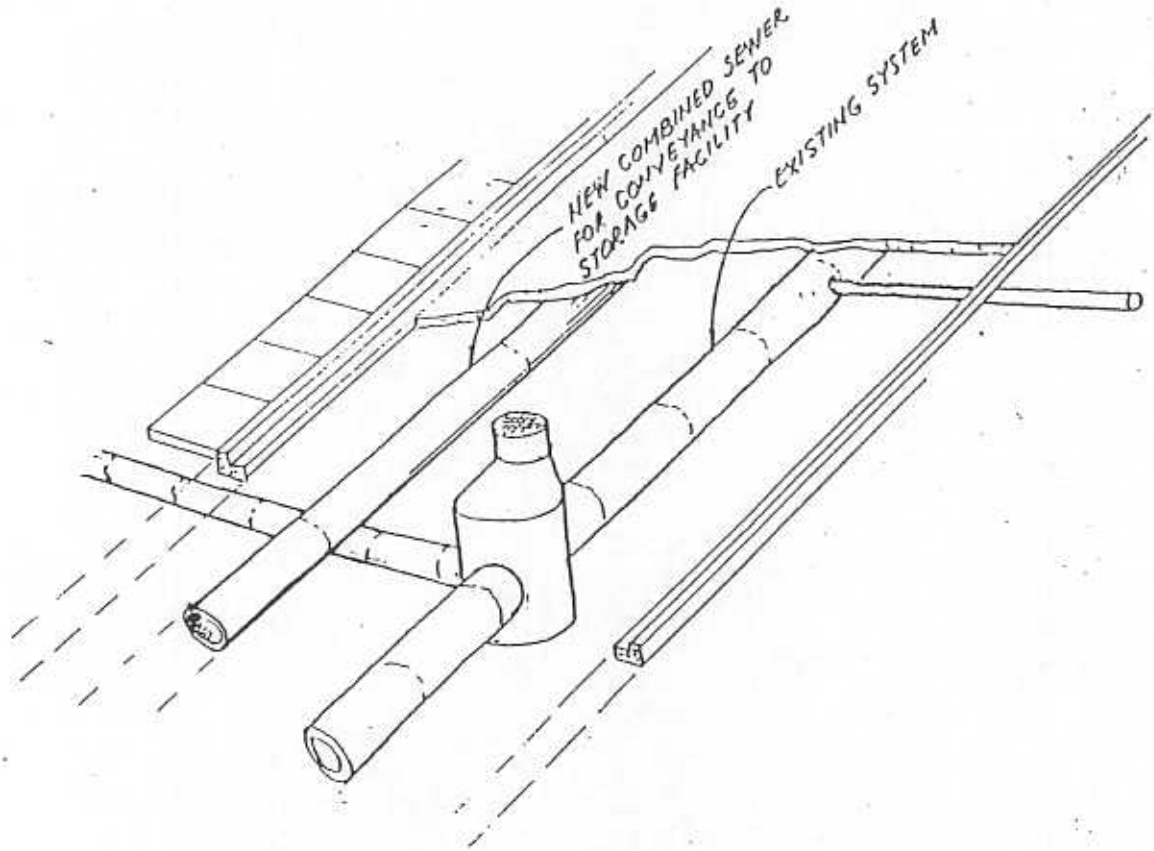

Drainage Basin: Waterfront/Industrial **CSO Control Element:** 1,000 LF of 30" RCP - Tank Influent

Revised: 5/3/94 **Alternative Description:** Henderson Street CSO Storage

Item Description	Quant.	Unit	Unit Cost	Total Cost
30 -Inch Diameter RCP	1,000	LF	$239.0	$239,000
-Inch Diameter RCP		LF		$0
-Inch Diameter RCP		LF		$0
-Inch Diameter RCP		LF		$0
Street Restoration	2,000	SY	$59.5	$119,000
			SUBTOTAL:	$358,000
Mobilization/Demobilization (10%)	1	LS	$35,800.0	$35,800
Contractor's O & P (10%)	1	LS	$35,800.0	$35,800
			ESTIMATED CONSTRUCTION COST:	$429,600
			Contingency (On Estimated Construction Cost) 30%	$128,880
			Sales Tax (On Construction Cost and Contingency) 8.2%	$45,795
			TOTAL ESTIMATED CONSTRUCTION COST:	$604,275
			Design and Owner Management 35%	$211,496
			TOTAL PROJECT COST:	$815,772

Drainage Basin: Norfolk

CSO Control Alternative: Below Grade Circular Tank Storage

Location: Norfolk Regulator

ENR 5630 for estimate

Sizing: 0.8 MG

Item Description	Quantity	Unit	Unit Cost	Total Cost
Concrete	1,430	CY	$367.1	$525,000
Temporary Sheeting and Shoring	15,460	SF	$11.0	$170,060
Excavation	12,140	CY	$14.0	$169,960
Backfill-Native	1,068	CY	$9.0	$9,612
Backfill - Imported	4,272	CY	$29.0	$123,888
Disposal of Excess Excavation	11,072	CY	$10.0	$110,720
Piling	12,000	LF	$16.5	$198,000
Sluice Gates	1	EA	$10,000.0	$10,000
Drainage Pumps and Assoc. Mech./Elect. Equip.	1	LS		$63,838
Street Restoration	800	SY	$60.0	$48,000
Utility Interference/Relocation	800	SY	$50.0	$40,000
Specialty Items				$0
			Subtotal	**$1,469,078**
Miscellaneous Mechanical/Washdown System	1	LS	3.0%	$44,072
Aeration	0	LS	0.0%	$0
Landscaping	1	LS	1.5%	$22,036
Odor Control	1	LS	5.0%	$73,454
Traffic Control	1	LS	$50,000	$50,000
Dewatering	1	LS	2.5%	$36,727
Mobilization/Demobilization	1	LS	10.0%	$169,537
Contractor's O & P	1	LS	10.0%	$169,537
			Subtotal	**$2,034,441**
Contingency			30%	$610,332
Sales Tax			8.2%	$216,871
	ESTIMATED CONSTRUCTION COST			**$2,861,644**
Design and Owner Management			35%	$1,001,576
Property Acquisition	11000	SF	$17	$187,000
Conveyance: Flow Regulator for 42-inch interceptor				$432,491
400-ft of 8-inchRCP				$231,819
30-ft of 6-inch forcemain				$20,577
	TOTAL PROJECT COST			**$4,740,000**

CSO Control Alternative: Storage - Below Grade Rectangular Tank Storage
Data Input Form and Unit Cost Data Input Form

Input Data In Shaded Cells

Assumptions

Cover Depth, ft	9
Side Water Depth, ft	15
Top Slab, ft	1.5
Bottom Slab, ft	3
Freeboard, ft	1.5
Tank Diam. ft	92
Excavation Depth, ft	35.2

Over Excavation:		
Bottom	5	ft
Sides	7	ft
Wall Thickness	1.3	ft

Calculated Quantities

Req'd Storage Volume (MG)	Concrete Base Slab (CY)	Walls (CY)	Top Slab (CY)	Columns (CY)	Req'd Y Piles (No.)	Sluice Gates (ea)	Hours Req'd to Drain Tank
0.8	790	220	400	20	150	1	48

Req'd Storage Volume (MG)	Excavation (CY)	Backfill (CY)	Backfill Native Mat'l (CY)	Backfill Imported Material (CY)	Haul Excess Material (CY)	Temporary Shoring (SF)	Y Street Restoration (SY)
0.8	12,140	5,340	1,068	4,272	11,072	15,460	800

LAND USE CLASSIFICATION WHERE STORAGE IS LOCATED*	2

* 1=Residential, 2=Commercial/Industrial, and 3=Highrise/Downtown Business District

Estimated Costs

ENR Basis 5630	Quantity	Unit	Unit Cost	Total Cost
Storage Tank Construction				
Concrete - Slab on Grade	790	CY	$300.0	$237,000
Concrete - Walls	220	CY	$450.0	$99,000
Concrete - Elevated Slab	400	CY	$450.0	$180,000
Concrete - Columns	20	CY	$450.0	$9,000
Common Excavation	12,140	CY	$14.0	$169,960
Backfill - Imported Material (Including Compaction)	4,272	CY	$29.0	$123,888
Backfill - Native Material (Including Compaction)	1,068	CY	$9.0	$9,612
Disposal of Excess Excavation	11,072	CY	$10.0	$110,720
Trench Support - Soldier Pile/Sheet	15,460	SF	$11.0	$170,060
Street/Surface Restoration				
Removal and Disposal of Asphalt	800	SY	$14.5	$11,600
6" Thick Base Course - Mineral Aggregate Type 2	800	SY	$5.5	$4,400
Pavement, Cem Conc CL 6 (1-1/2), 12"	800	SY	$40.0	$32,000
Pavement, Cem Conc CL 6 (1-1/2), 8" w/ 2" Asphalt Wearing Course	0	SY	$0.0	$0
Pumps, Associated Piping and Mechical/Electrical Equipment				
Pumps and Associated Piping	0.38	MGD		$42,701
Misc. Mechanical Equipment	1	LS	30.0%	$12,810
Electrical Systems	1	LS	15.0%	$8,327
Specialty Items - Description				
				$0
				$0

APPENDIX G

North Beach Pump Station Overflow Control

METRO CSO 5-YEAR UPDATE
ALTERNATIVE INFORMATION SUMMARY

Alternative Name: North Beach Pump Station Overflow Control

Alternative Type: (e.g., treatment, conveyance, separation) Conveyance and Off-line Storage

Affected CSOs:

CSO Name	Annual Base Volume, mg	Annual 1996 Volume, mg	Storm No. 6 1996 Volume, mg	Storm No. 6 Peak Rate, mgd
North Beach	2.0	2.0 (2.0)	0.5 (0.5)	

*Values in parentheses are with West Point set point at 440 mgd.

Alternative Description:

This alternative consists of a two phased upgrading of the North Beach Pump Station and force main. Phase 1 would consist of the construction of an underground 140,000-gallon storage basin at the site of the North Beach Station. Phase 1 would reduce the frequency of overflows from 18 to 4 per year and would reduce the volume of overflows from 1.9 to 1.0 MG per year. Phase 2 improvements would consist of upgrading the existing pump station capacity to 4.5 MGD, replacing 2,060 lineal feet of the North Beach force main within Carkeek Park, and making minor modifications to the City of Seattle pipelines. Phase 2 would reduce the frequency of overflows from 4 to 1 per year, and would reduce the overflow volume from 1.0 to 0.2 MG per year.

Major problems/barriers/issues to be resolved: (e.g., permitting, optimization)

The construction of the storage basin may require a land use decision from the City Council to allow construction in an area zoned single family.

Capital Cost (1994 $): $3.5 million (Attach cost summary spreadsheet and detailed cost estimates.)

Briefly describe the alternative's characteristics in each of the following categories:

CATEGORY	CHARACTERISTICS
Impact on Natural Environment	This alternative will affect receiving water quality by reducing the discharge of untreated sanitary sewage to surface water.
Impact on Social Environment	Construction of the storage basin will require temporary relocation of Metro's existing bus stop and temporary closure of the bus lane on Triton Drive N.W.
Impact on Public Health and Safety	Possible slight negative safety impacts due to traffic impacts during construction. Public health impacts equivalent to all other 1-year CSO reduction alternatives.
Fairness and Equity	This alternative will place several underground facilities northwest of Triton Dr. N.W. and N.W. Neptune Pl. The area is predominantly residential.
Economic Impacts	The capital cost of this alternative is $ 3.5 million.
Flexibility	This alternative does not preclude the implementation of other CSO control measures.

CSO Alternative: North Beach Pump Station Overflow Control

Item	Total Cost
140,000 Gallon Storage Basin	$713,000
2,060 LF Force Main Replacement	$273,000
City pipeline modifications	$31,000
Pump Station Upgrade	$535,000
SUBTOTAL:	**$1,552,000**
Mobilization/demobilization (10%)	$155,000
Contractor O&P (10%)	$155,000
ESTIMATED CONSTRUCTION COST:	**$1,862,000**
Contingency (30%)	$559,000
Sales tax (8.2%)	$199,000
TOTAL ESTIMATED CONSTRUCTION COST:	**$2,621,000**
Design and owner management (35%)	$917,000
TOTAL PROJECT COST:	**$3,538,000**

Drainage Basin: West Point **CSO Control Alternative:** Circular Secondary Clarifiers

Location: West Point STP

ENR 5630 for estimate **Sizing:** 24.0 mgd 2.2 MG

Item Description	Quantity	Unit	Unit Cost	Total Cost
Concrete	1,680	CY	$340.2	$571,500
Temporary Sheeting and Shoring	17,820	SF	$11.0	$196,020
Excavation	18,600	CY	$14.0	$260,400
Backfill-Native	464	CY	$9.0	$4,176
Backfill - Imported	1,856	CY	$29.0	$53,824
Disposal of Excess Excavation	18,136	CY	$10.0	$181,360
Piling	0	LF	$16.5	$0
Flow Control Gates	1	EA	$10,000.0	$10,000
Drainage Pumps and Assoc. Mech./Elect. Equip.	0	LS		$0
Street Restoration	0	SY	$0.0	$0
Utility Interference/Relocation	1,900	SY	$100.0	$190,000
Specialty Items				$1,380,665
			Subtotal	**$2,847,945**
Miscellaneous Mechanical/Washdown System	0	LS	5.0%	$0
Aeration	0	LS	3.0%	$0
Landscaping	1	LS	10.0%	$284,795
Odor Control	0	LS	5.0%	$0
Traffic Control	1	LS	$50,000	$50,000
Dewatering	1	LS	2.5%	$71,199
Mobilization/Demobilization	1	LS	10.0%	$325,394
Contractor's O & P	1	LS	10.0%	$325,394
			Subtotal	**$3,904,726**
Contingency			30%	$1,171,418
Sales Tax			8.2%	$416,244
	ESTIMATED CONSTRUCTION COST			**$5,492,387**
Design and Owner Management			35%	$1,922,336
Property Acquisition	0	SF	$17	$0
	TOTAL PROJECT COST			**$7,420,000**

CSO Control Alternative: Storage - Below Grade Rectangular Tank Storage
Data Input Form and Unit Cost Data Input Form

Input Data In Shaded Cells

Assumptions

Peak Overflow Rate	1500 gpd/SF	**Design Flow**	24 mgd	
Cover Depth, ft	0	Over Excavation:		
Side Water Depth, ft	18	Bottom	5 ft	
Top Slab, ft	0	Sides	5 ft	
Bottom Slab, ft	2	Wall Thickness	1.3 ft	
Freeboard, ft	1.5			
Tank Diam. ft	143			
Excavation Depth, ft	26.5			

Calculated Quantities

Comp'd Storage Volume (MG)	Concrete: Base Slab (CY)	Walls (CY)	Top Slab (CY)	Columns (CY)	Req'd N Piles (No.)	Sluice Gates (ea)	Hours Req'd to Drain Tank
2.2	1,230	400	0	50	0	1	24

Comp'd Storage Volume (MG)	Excavation (CY)	Backfill (CY)	Backfill Native Mat'l (CY)	Backfill Imported Material (CY)	Haul Excess Material (CY)	Temporary Shoring (SF)	N Street Restoration (SY)
2.2	18,600	2,320	464	1,856	18,136	17,820	0

LAND USE CLASSIFICATION WHERE STORAGE IS LOCATED*	1

* 1=Residential, 2=Commercial/Industrial, and 3=Highrise/Downtown Business District

Estimated Costs

ENR Basis 5630

	Quantity	Unit	Unit Cost	Total Cost
Storage Tank Construction				
Concrete - Slab on Grade	1230	CY	$300.0	$369,000
Concrete - Walls	400	CY	$450.0	$180,000
Concrete - Elevated Slab	0	CY	$450.0	$0
Concrete - Columns	50	CY	$450.0	$22,500
Common Excavation	18,600	CY	$14.0	$260,400
Backfill - Imported Material (Including Compaction)	1,856	CY	$29.0	$53,824
Backfill - Native Material (Including Compaction)	464	CY	$9.0	$4,176
Disposal of Excess Excavation	18,136	CY	$10.0	$181,360
Trench Support - Soldier Pile/Sheet	17,820	SF	$11.0	$196,020
Street/Surface Restoration				
Removal and Disposal of Asphalt	0	SY	$0.0	$0
6" Thick Base Course - Mineral Aggregate Type 2	0	SY	$0.0	$0
Pavement, Cem Conc CL 6 (1-1/2), 12"	0	SY	$0.0	$0
Pavement, Cem Conc CL 6 (1-1/2), 8" w/ 2" Asphalt Wearing Course	0	SY	$0.0	$0
Pumps, Associated Piping and Mechical/Electrical Equipment				
Pumps and Associated Piping	2.15	MGD		$84,709
Misc. Mechanical Equipment	1	LS	30.0%	$25,413
Electrical Systems	1	LS	15.0%	$16,518
Specialty Items - Description				
Sludge Scraper Mechanism	1	LS		$500,000
RAS pumps	24	mgd		$870,638
Hand railing	457	FT	$22.0	$10,027

APPENDIX H

Metro CSO 5-Year Update

Potential Joint Metro/City of Seattle CSO Projects
(Task 4.05 Project)

Metro CSO
5-year Update

Potential Joint Metro/
City of Seattle CSO Projects

Task 4.05 Report

Prepared by

Brown and Caldwell/KCM and Associated Firms

DRAFT

December 1994

"This is a draft report and is not intended to be a final representation of the work done or recommendations made by Brown and Caldwell. It should not be relied upon; consult the final report."

Potential Joint Metro/City Of Seattle CSO Projects

Task 4.05 of the King County/Department of Metropolitan Services (Metro) Combined Sewer Overflow (CSO) Control 5-Year Update requires review of potential projects that the City of Seattle and Metro could jointly pursue to control individual CSOs. Joint projects which minimize the combined expenditures and/or maximize the environmental benefit are to be addressed.

The potential joint projects that have been examined are not considered critical to the operation or maintenance of the systems for either City of Seattle or Metro. However, if Metro and the City of Seattle were to work together, the joint benefits that can be identified include:

- Cost savings to both the City of Seattle and Metro.
- Increase in the number of projects due to lower cost.
- Reduction in overflow events, to help achieve compliance with the "one overflow event per year" regulation.
- Reduction in the volume of raw sewage being discharged into the waterways.

The information obtained for this report was from a combination of sources, including interviews with Ed Cox and Bob Swarner of Metro, Liz Anderson, Robert Chandler, Joe Talbot, and Neal Thibert of the City of Seattle, Brown and Caldwell staff, design plans, and current collection system hydraulic model information.

The following is a brief list of the potential joint projects examined in this task.

- ***Denny-Lake Union Storm Sewer.*** Correction of overflow from a City of Seattle storm sewer to the combined sewer in the Denny tributary area has the potential to reduce outflows from the Denny Way Regulator by an estimated 10 percent.
- ***Denny-Vine Street Overflow (069).*** In conjunction with the Denny project, raising the city overflow weir at the Vine Street overflow could reduce the volume of the cities overflow to a once-per-year control level.
- ***Henderson Street Pump Station.*** The city has two overflow weirs upstream of the Henderson Street Pump Station that overflow during Design Storm 6. Inflow and infiltration (I/I) rehabilitation of the by system in this area would benefit both the city and Metro reducing the volume of overflow during storm events.

- ***Ballard Regulator/24th Avenue NE.*** Jointly constructing a CSO storage tank instead of separate storage tanks would be a cost benefit to both the city and Metro. A savings of 25 percent in total project capital cost could be realized.

- ***Chelan Regulator/Delridge CSO Storage.*** Modifying the tank operation and installing gate structures at the City of Seattle's Delridge CSO storage tanks would reduce the overflow at the Chelan Regulator during storm events.

- ***Hanford Street/Diagonal Way.*** Constructing a pump station in the Diagonal Way storm drain system would benefit both the city and Metro by eliminating backups at the Downstream Control Structure on the Hanford Street Tunnel. It would also benefit the city by eliminating stormwater backups in streets and businesses.

- ***King Street Regulator.*** The city has 3 overflow weirs along the Alaska Way Interceptor that may be affected by Metro's King Street Regulator Station or Elliott Bay Interceptor (EBI) operations. Due to lack of information about the city overflows in the area of the King Street Regulator, monitoring of the overflows is recommended. If overflows are identified, constructing a joint storage facility would benefit both the city and Metro.

The above-listed potential projects are described in detail below and are shown on the location map (Figure 1).

Denny Regulator

Metro and the City of Seattle are actively pursuing a joint project at the Denny Regulator. This project includes the city's preferred East Lake Union project that transports CSO which would normally occur along the east and south shores of Lake Union to the south Lake Union area in new conduits. At that point, these flows are joined by other flows currently entering Metro's Lake Union tunnel and are conveyed to the Denny/Lake Union Regulator at the foot of Denny Way. The preferred Metro portion of the joint project (described elsewhere) consists of a storage tunnel beneath Mercer Street and a treatment facility at the foot of Mercer on the west side of Elliott Avenue.

The following two additional projects could be associated with the Denny Regulator project.

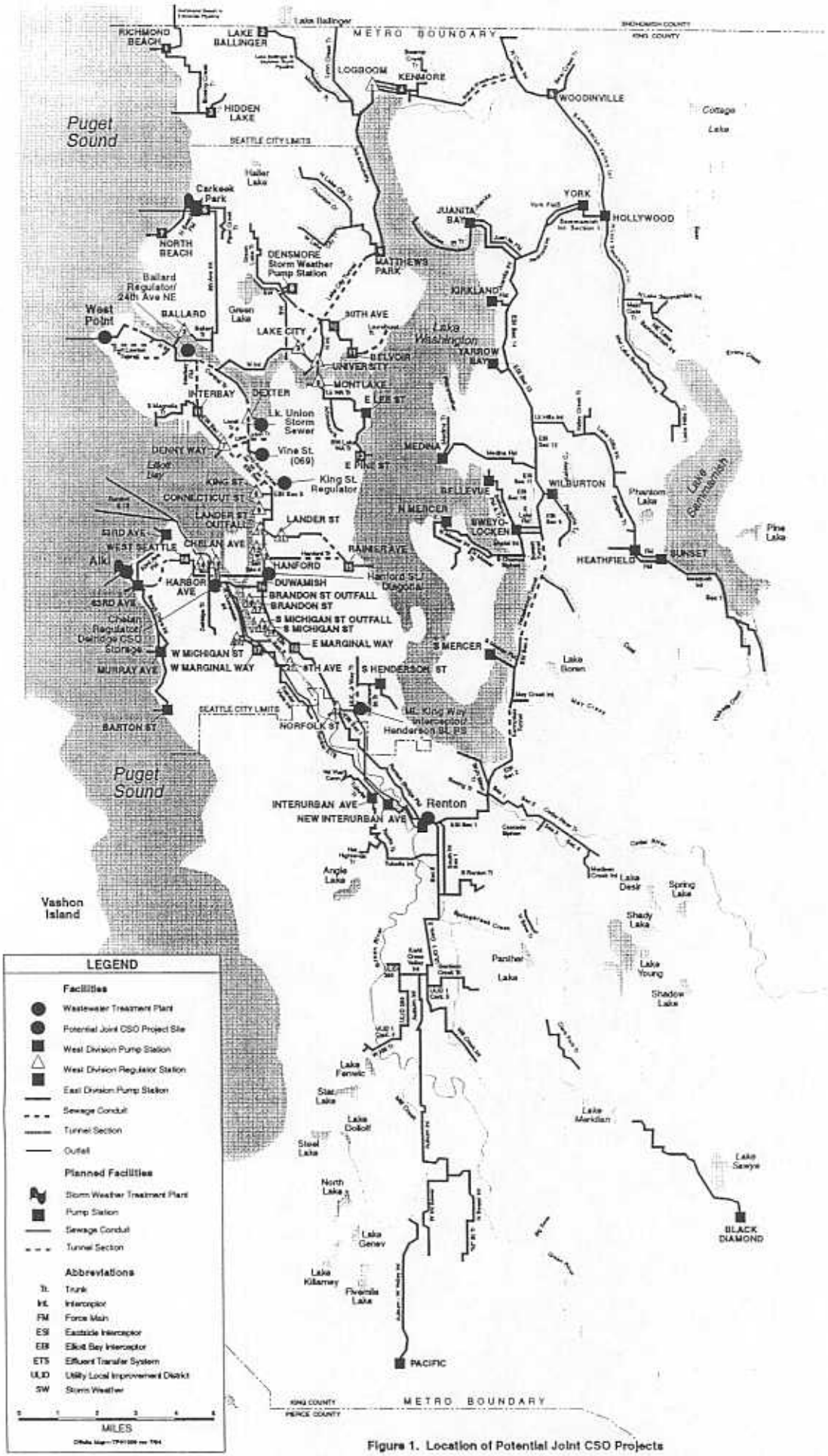

Figure 1. Location of Potential Joint CSO Projects

Lake Union Storm Sewer (Through Volunteer Park)

Situation

The City of Seattle has a storm sewer and combined sewers that flow west under the Interstate 5 (I-5) freeway along Melrose Avenue, south of Denny Way. The sewers, two 24-inch diameter lines, flow into a 30-inch diameter combined sewer at a manhole. In the past, there were also two 24-inch storm sewer lines that flowed into this manhole, but they have been plugged. A 30-inch diameter storm sewer crosses above the 30-inch diameter combined line with a 30-inch diameter connection line between the combined sewer and the storm sewer, as shown in Figure 2. The area tributary to this point was partially separated during construction of the I-5 freeway.

During calibration of Metro's model for the Denny Regulator for Design Storm 6, Metro found that it was necessary to increase the assumed fraction of impervious surface in the tributary area that remains connected to the combined sewer from 40 percent (representative of partial separation) to 70 percent. By inference, Metro has suggested that there is the possibility of overflow from the storm sewer to the combined sewer at this manhole during larger storms. The City of Seattle maintains depth and flow direction meters at the invert of the 30-inch diameter connection tube which indicates that such overflows do occur.

Correction of overflows from the storm sewer system into the combined sewer at this point, would reduce the hydraulic loading on the Denny Regulator project, increasing it's effectiveness. Figure 3 is a hydrograph comparing the inflows to the Lake Union Tunnel before and after the change in Metro's modeling assumption about fraction of connected imperviousness. The hydrograph shows that the total inflow volume of flow to the Lake Union Tunnel would be reduced about 10 percent, and the peak flow rate would be reduced from 113 million gallons per day (mgd) to 100 mgd (about 11 percent). While these reductions would not modify the basic design concept for the joint Denny project, they would increase the overall effectiveness.

Proposed Project

The flow direction in the connection tube between the storm sewer and the combined sewer has been monitored since 1993. Review of these records indicate that overflows from the storm sewer to the combined sewer, lasting for 0.5 to 1 hour, occur often. The City of Seattle considers it a problem that will be dealt with at an unknown time in the future. It is possible that the hydraulic characteristics of the structure create a hydraulic jump in the storm sewer that overtops the weir. Raising the weir would prevent this behavior. Further study is necessary to determine if this structure is the cause of the entire

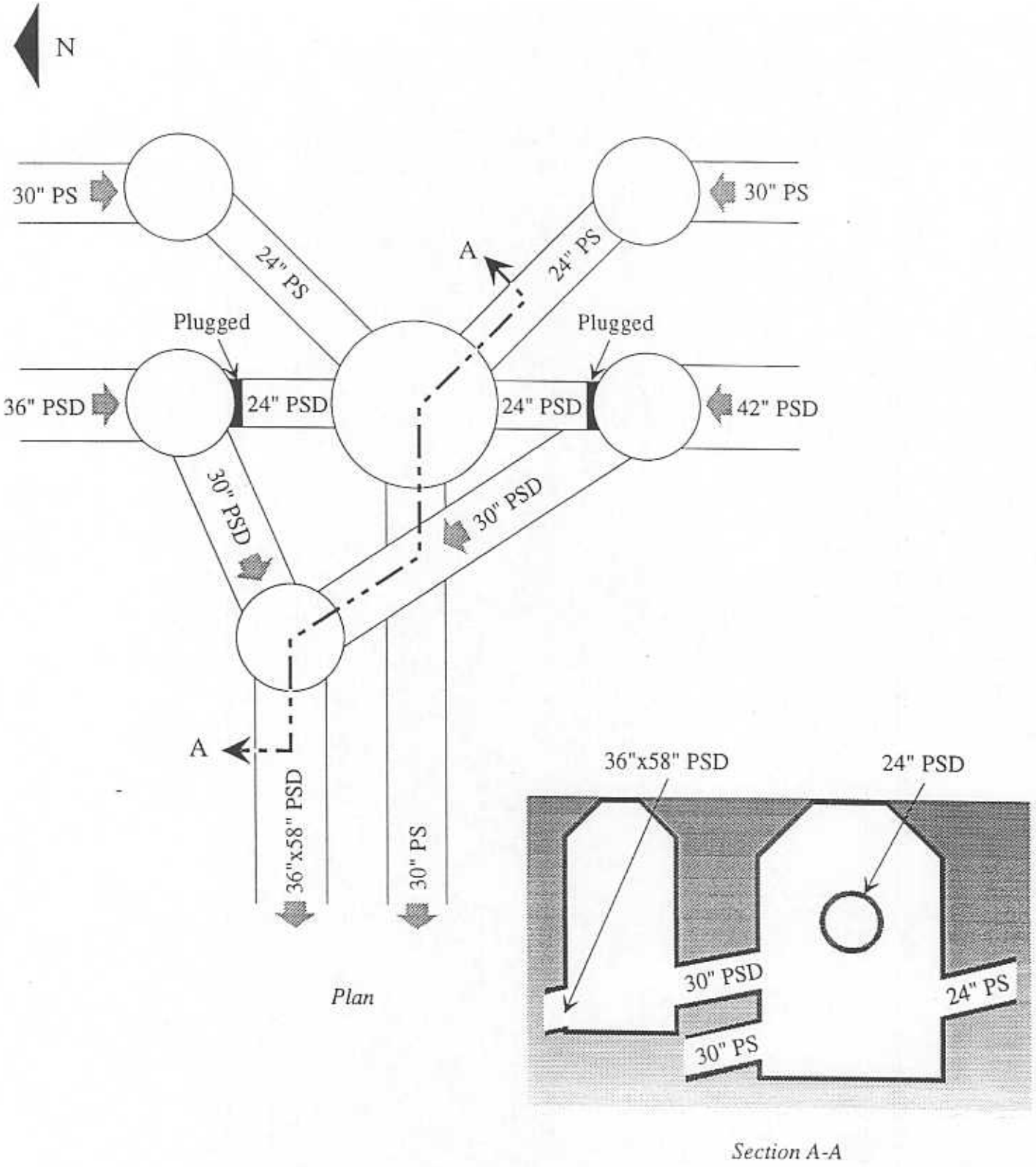

7683579c

Figure 2
Lake Union Storm Sewer Overflow

Figure 3.

Estimated Impact of City Storm Drain Overflow East of I-5 on Inflows to the Lake Union Tunnel During Storm 6

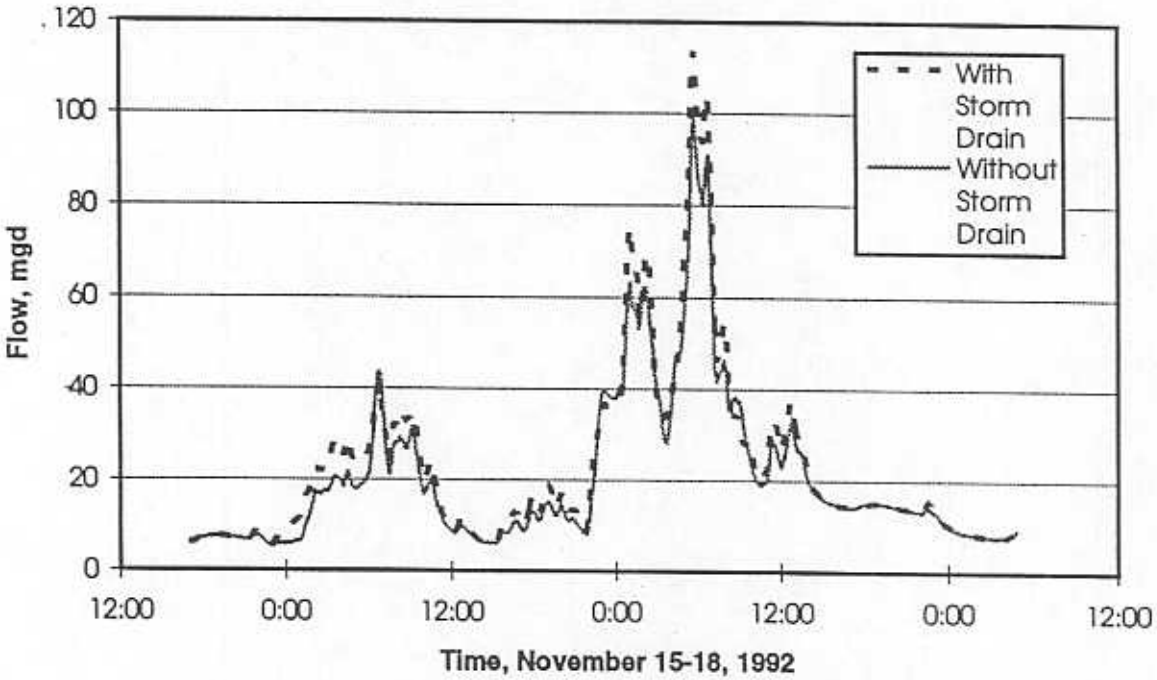

increase in flow suggested by Metro's model, and if so, what are the causes. A correction project can then be designed. Analysis of the existing flow data is required. It may be necessary to improve flow monitoring for both the stormwater and combined systems to provide a complete characterization of the problem. It may also be found that much of the problem originates elsewhere in the system.

City of Seattle Overflow at Vine Street (069)

Situation

The City of Seattle's overflow at Vine Street is at the upstream end of the Alaskan Way Interceptor, Section 1. Ed Cox of Metro estimates that 50 gpm (gallons per minute) of fresh and salt water are entering the system at the Vine Street overflow during high tides. Flow joins the Elliott Bay Interceptor (EBI) at Broad Street. The overflow at Vine Street is likely affected by the depth of water in the EBI. The City of Seattle's 1988 CSO Control Plan for the overflow included reliance on the Drainage Ordinance to reduce peak flows and raising the overflow weir to send additional flow to the EBI. In Metro's Hydraulic Model, it is assumed that there is no city overflow at this section of the Alaskan Way Interceptor. In other words, all flow predicted by Metro's model is assumed to enter the EBI, and is thus included in any overflow predicted for Metro's Interbay pump station (Interbay overflows occur at Denny). Metro's model also does not account for the impact of the drainage ordinance on this overflow.

Proposed Project

Raise the city overflow weir at Vine Street to provide a once-per-year control level. This is consistent with the current conceptual design for the Denny Project. Tidal effects and hydraulic constraints may make the project somewhat more complicated than just raising the weir at Vine Street. A more complete hydraulic study will be required.

Henderson Street Pump Station/Martin Luther King Way Interceptor

Situation

The Metro system located in this area is a combined system that is partially separated. The combined sewer that runs below Rainier Avenue connects into the Henderson Street Trunk, which is located downstream of the Henderson Street Pump Station discharge. The Henderson Street Trunk is a gravity line from the point of joining the Rainier Avenue sewer to the Norfolk Regulator Station. The Martin Luther King Interceptor connects to the Henderson Street Trunk downstream of Rainier Avenue. The Martin Luther King outfall is located at this connection. These areas have been partially separated for the most part.

According to hydraulic modeling by Metro, the City of Seattle has two overflow weirs upstream of the Henderson Street Pump Station which overflow during Storm 6 events as shown in Figure 4. The weirs, located at Rainier Avenue South and South Cooper Street (CSO 049), and at South Island Drive and South Grattan Street (CSO 046), have an estimated overflow volume of 60,000 gallons and 276,000 gallons, respectively, during Design Storm 6. These overflows have not been verified by the city.

Proposed Project

Metro has installed a permanent flow monitor at the Henderson Street Pump Station to collect information on the volume flows in this area. A storage tank to collect the Metro overflow during storm events and then release the flows during non-peak times could be a solution. A joint project that should be considered and would benefit both the City of Seattle and Metro is inflow and infiltration (I/I) rehabilitation. This would include disconnecting roof tops and park drains and rehabilitating sewers and laterals. Rick Andrews of Metro is studying this area, and a decision on the alternatives will be made next year.

"Draft Report--Use or disclosure of data contained on this sheet is subject to the restriction specified at the beginning of this document."

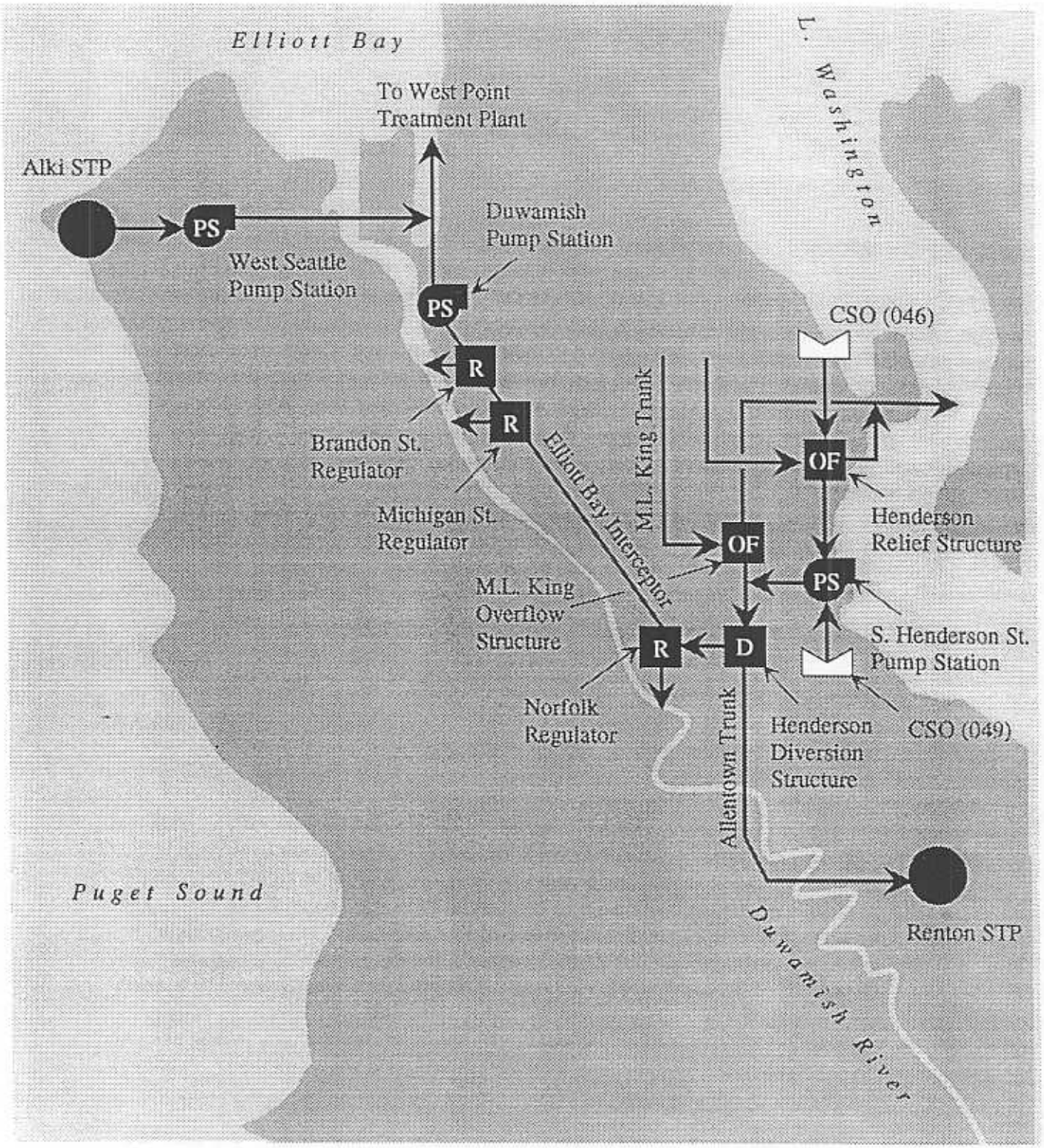

7683579d

Figure 4
Henderson/M.L. King CSO - Flow Schematic

Ballard Regulator/24th Avenue NE

Situation

In the area near two Metro overflows, the Ballard Regulator and the 11th Avenue overflow structure, there are three overflow pipes owned by the City of Seattle, located at 24th and 28th Avenues as shown in Figure 5 (will be included in final draft). All three pipes are closely associated to each other in the system and overflow during storm events. The Ballard Regulator feeds into the North Interceptor, which runs almost completely full to get 440 mgd, the maximum capacity of the treatment facility, to West Point. This causes a reduction in head, and together with restriction in the inverted siphon between the regulator and North Interceptor, reduces the amount of flow from the Ballard Regulator to the North Interceptor. This causes overflows of the Ballard Regulator and possibly reverse flow from the North Interceptor under certain conditions. Storage tanks have been identified for control of Metro CSOs at the Ballard Regulator and 11th Avenue NW overflow weir. Control of the city's overflows could also be achieved with storage.

Proposed Project

A single storage tank for both the Metro overflow at the Ballard Regulator Station and the city-overflows would be more cost-effective than separate tanks. Figure 6 shows graphically that the project cost per gallon for a storage tank decreases with the increased storage capacity of the tank. Therefore, building one storage tank for both Metro and the City of Seattle overflows instead of building two separate storage tanks at this location will decrease the per-gallon cost of storage for both the city and Metro. Table 1 shows that there would be an estimated 25 percent savings of total project costs to both Metro and the City of Seattle if a single storage tank was constructed.

"Draft Report--Use or disclosure of data contained on this sheet is subject to the restriction specified at the beginning of this document."

Figure 6.

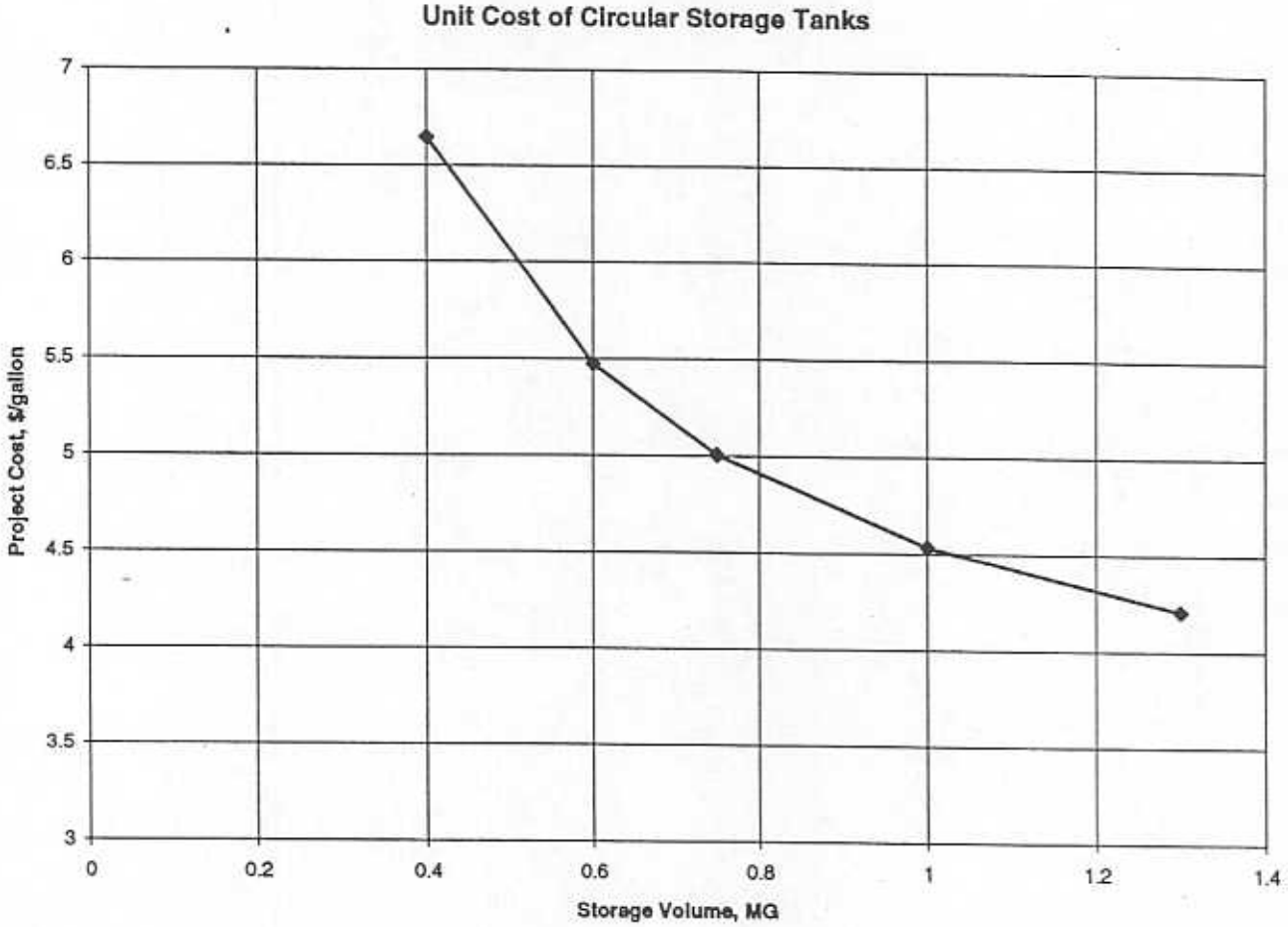
Unit Cost of Circular Storage Tanks
Project Cost, $/gallon
7
6.5
6
5.5
5
4.5
4
3.5
3
0
0.2
0.4
0.6
0.8
1
1.2
1.4
Storage Volume, MG

Table 1. Storage Tank Construction Cost Comparison

	Separate Projects		Combined Project
Overflow source	City of Seattle	Metro	Combined
Overflow volume[a]	0.6 MG	0.4 MG	1.0 MG
Storage Tank Construction cost	$3.28 million	$2.66 million	$4.53 million
		Savings	$1.41 million (25%)

[a] Estimated overflow data was taken from Metro CSO Task 4 Report.

Chelan Regulator/Delridge CSO Storage

Situation

The City of Seattle has two 1.6 million gallon (MG) CSO storage tanks at Delridge, located near the Chelan Regulator. During Design Storm 6, the Chelan Regulator overflows approximately 6 MG, some of which is assumed to come from the city's tanks.

The tanks, designed in 1982 by Brown and Caldwell, work as follows: The flow enters the control chamber manhole as shown in Figure 7. At the bottom of the control chamber is the exit pipe for the flow. As the flow exits the control structure, it goes through a hydrobrake at the entrance of the pipe. The hydrobrake regulates the flow that exits the control structure manhole. In the case of high flows or storm events, the volume in the structure will rise, overtop a weir, and then enter a pipe that is connected to the tank. After the increase in flow is over, sensors detect the point when the head of water in the tank is higher than that in the control structure and open the gate connection between the control structure manhole and the tank. The flow in both the control structure and the tank will equalize and then decrease to the point of continuous flow through. The tank cleaning system will then activate to flush the sediment off the bottom, and then the gate connection will close. As part of the design, there is a bypass line from the tank to the system which bypasses the control structure. This was intended to allow work crews to manually cause a quicker draw-down of flows in the tank.

According to a memorandum by Bob Swarner of Metro dated September 18, 1994, the city's tank characteristics are as follows:

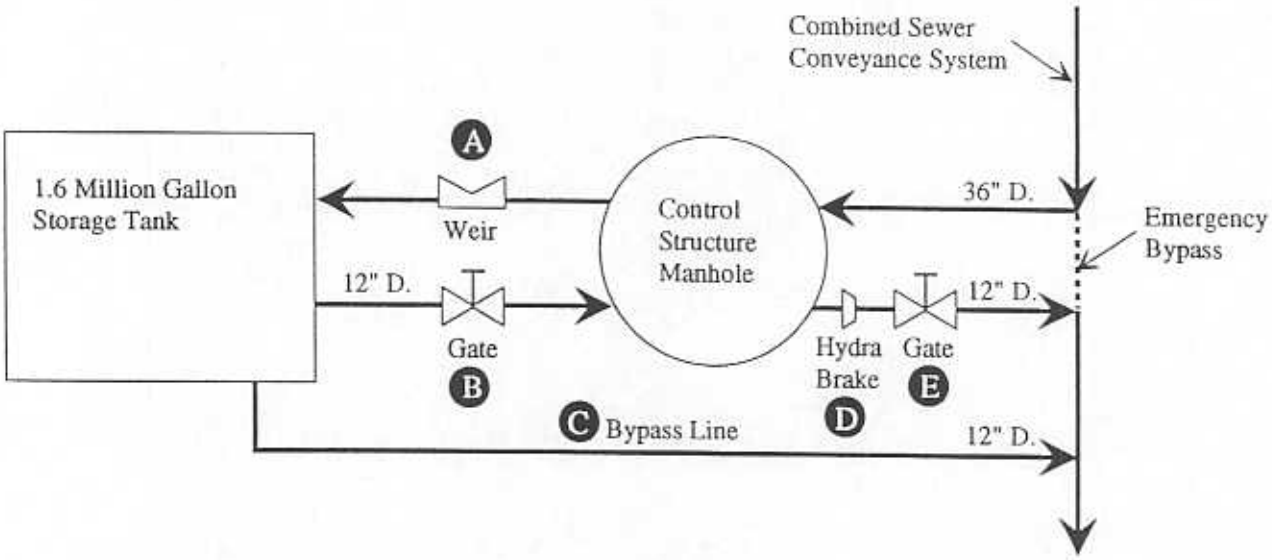

A Flow enters the tank when flow fills the control structure to the level of the weir.

B When the flow level is higher in the storage tank than that in the control structure, the gates between the storage tank and the control structure manhole are opened, and the flow in the tank is discharged to the control structure, and then discharged into the system.

C The bypass line is manually operated for quick draw down of the storage tank.

D Hydra brake on pipe that discharges flow from control structure. Used to reduce head pressure in pipe.

E Proposed gate to divert all flow to storage tank during peak flow periods. The gate can be opened, and flow discharged later into the System at non-peak times.

7683579a

Figure 7
Schematic of Delridge CSO Storage Tank and Control Structure Facilities

The tank at SW Henderson and 22nd Avenue SW accepts flow from an area of 193 acres, 28 acres (14%) of which have partial separation.

The tank at SW Orchard Street and Delridge Way SW receives all the flow from an area of 309 acres, 188 acres (61%) of which have partial separation.

Proposed Project

Modify the tank operation by installing instrumentation and a gate structure which would, during storm events, eliminate the discharge from the control structure and divert the flow entirely to the tanks (see Figure 7), in turn reducing the overflow at the Chelan Regulator. The flow in the tanks could then be reintroduced into the system at a non-peak time.

There have been problems with the assumptions in the hydraulic modeling of the system at the Delridge CSO storage tanks. Therefore, an estimate of the reduction of overflow at the Chelan Regulator due to tank modifications is not available.

Hanford Street/Diagonal Way

Situation

A 36-inch diameter, low-flow sanitary pipe was constructed in the Hanford Street Tunnel. The remaining capacity of the tunnel is then used by the City of Seattle to convey stormwater to Diagonal Way.

It has been suggested that during large storm events and high tide flows, overflows (or more accurately, backups) occur from the City of Seattle's Diagonal Way storm drain system into the Hanford Street combined system. The source point of this overflow from the stormwater line to the combined line is expected to be at the Downstream Control Structure, shown in Figure 8, located approximately midway on the Hanford Street Tunnel is Metro's former Hanford Number 1 regulator site.

"Draft Report--Use or disclosure of data contained on this sheet is subject to the restriction specified at the beginning of this document."

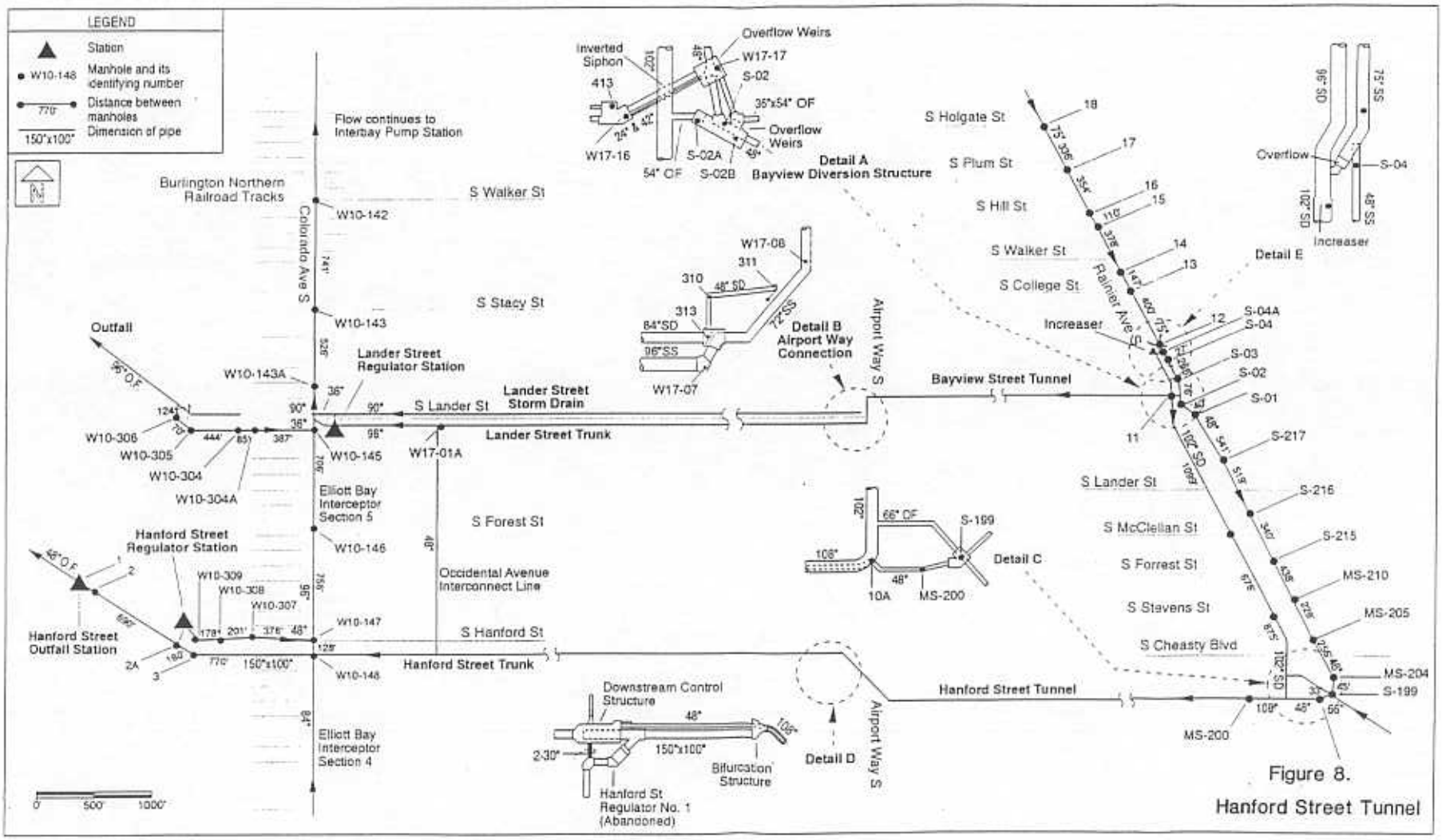

Figure 8.
Hanford Street Tunnel

Proposed Project

A possible joint project for the City of Seattle and Metro would be to construct a pump station on the Diagonal Way storm drain system. During high tide and storm events, the stormwater can be pumped into the river which will eliminate backups at the Downstream Control Structure.

Another benefit of this project would be the elimination of storm water backups in the streets and businesses along the storm drain system. Because drainage from I-5 enters this system, the Washington Department of Transportation (WDOT) could also be considered for part of the joint project.

King Street Regulator

Situation

Metro owns the King Street Regulator, located in the same area where the City of Seattle has three overflows (at Madison, University and Washington) for the Alaska Way Interceptor which may be affected by high flow levels in the EBI. The Metro model assumes no overflow occurs in this area. Due to resource cutbacks, the overflows have not been recently monitored by the city. Therefore, the city does not have information to determine the magnitude or frequency of overflow events that these locations or whether overflows even occur.

Proposed Project

Due to the low invert elevation of the overflow structures, it is very possible that overflows are occurring that these locations. The Alaska Way outfalls should be monitored to provide this information.

If after monitoring the Alaska Way outfalls it is determined that there are overflows, a possible project could be constructing a joint storage facility at the King Street Regulator that will include the overflow from the Alaska Way Interceptor in times of high flows. If Metro constructed the storage facility, then the city's contribution could be raising the weirs at the overflows and paying a portion of the King Street Project costs.

APPENDIX I

Metro CSO 5-Year Update

Separation Alternatives
Denny Regulator Station
Subbasins Nos. 102, 103, 104, and 1691

Metro CSO
5-Year Update

Separation Alternative

Denny Regulator Station (Local and Lake Union)
Subbasin Nos. 102, 103, 104, and 1691

Prepared by

Herrera Environmental Consultants

February 1994

INTRODUCTION

The purpose of this memo is to analyze the requirements for the separation of combined sewers in the area associated with the Denny Regulator Station Project. The analysis consists of two parts. The first part involves estimating the layout and size of a piped network of storm drains capable of conveying the city of Seattle 25-year design storm. The second part consists of an evaluation of potential increases in pollutant loading associated with the discharge of storm water to Lake Union and to Elliott Bay and the viability of implementing best management practices for mitigating those loadings. This information will be used both as a basis for estimating the cost of a separation project in these subbasins and as a means of estimating the cost of separating combined sewers in other areas of the city.

The four subbasins associated with the Denny Regulator Station are shown in Figure 1. Subbasin 102 encompasses the southern end of Lake Union. The area extends south from the lake to Virginia Street and Eighth Avenue, and from Melrose Street to Eighth Avenue. A section of the subbasin also stretches north on the western side of the lake to Galer Street. Subbasins 103 and 1691 together cover the area along the Elliott Bay waterfront between Virginia Street and Second Avenue West, east to the Seattle Center, and along the southern side of Queen Anne hill. Subbasin 104 covers most of Queen Anne hill from West Crockett Street to Elliott Avenue West.

Subbasin 102 consists entirely of land zoned commercial/industrial. Subbasin 104, located mainly on Queen Anne Hill, consists of a mix of land uses including single-family and multifamily residential areas, as well as commercial and industrial areas. Subbasins 103 and 1691 also covers a mix of land uses; however, land use is mainly commercial with a small amount of residential housing. A summary of land use in the four subbasins is shown in Table 1.

Table 1. Land Use in Subbasins 102, 103, 104, and 1691

Subbasin Acreage	102	103	104	1691
Commercial/Industrial	245	182	58	87
Single-Family Residential	0	2	108	0
Multifamily Residential	0	27	67	0
TOTAL	245	211	233	87

A planning-level effort was previously undertaken (Metro CSO Plan Finalization, CWC-HDR, Inc., October, 1987) to estimate a system design and costs associated with CSO separation in Subbasins 103, 104, and 1691. The earlier effort, however, did not include Subbasin 102.

This current evaluation was undertaken partially to modify the separation analysis to include subbasin 102. The earlier work was also based on city of Seattle design guidelines in effect in 1987 which required that public storm drains be sized to accommodate a 10-year design storm. Those guidelines have since been revised to increase required pipe capacity to convey the 25-year design storm. Finally, in order to extrapolate the cost estimates developed for separation in these subbasins to other basins,

it is necessary to restructure the cost estimate using input parameters (e.g., linear feet of diameter pipe per land use area) which can be applied to other parts of the city.

STORMWATER DRAINAGE SYSTEM

This section describes the criteria and methods used to develop planning level estimates of new storm sewer system components that would be needed for separation of combined sewer flows in the drainage area contributing to the Denny Regulator Station. Two subbasins are included in this discussion: the Denny local subbasins (which are comprised of subbasin numbers 103, 104, and 1691 as denoted in previous studies), and the Lake Union subbasin (denoted as subbasin 102 in previous studies). Estimates of the quantities of storm drain components that would be needed in each of these two subbasins for separation of storm runoff flows are provided. For the Lake Union subbasin (102), two options for storm runoff discharge locations are incorporated in the analysis: to Lake Union and to Elliott Bay.

Design Criteria Used in Sizing Storm Sewer System Components

The city of Seattle's *Design Guidelines for Public Storm Drain Facilities* (revised October, 1990) were used as the basis for developing estimates of the sizes and quantities of new storm sewer system components. For some parameters, these guidelines have not been updated to reflect the Seattle Engineering Department's current, revised criteria. The Seattle Engineering Department (Pfaender, 1994 personal communication) provided additional input on required design criteria. The specific criteria used in the storm sewer separation analyses are as follows:

- Storm sewers must be sized to convey runoff from the 25-year, 24-hour storm (Pfaender, 1994 personal communication). The hyetograph for this storm is provided by the Seattle Engineering Department. The total 24-hour precipitation for this event is 3.125 inches.

- Storm drains must be a minimum of 12 inches in diameter.

- Storm drain pipe slopes must be at least 0.5 percent, with 1.0 percent being preferable. Pipe slope must achieve a minimum velocity of 3.0 feet per second.

- Concrete pipe is the standard material for storm drains (has a Manning's "n" value of 0.013).

- Storm drains must have a minimum cover of 6 feet above the top of pipe.

Methodology Used to Calculate Runoff Characteristics

The Seattle Engineering Department further advised that, for a study such as this, there is no prescribed methodology for calculating storm runoff (aside from using the specified 25-year rainfall hyetograph). Therefore, the Santa Barbara Urban Hydrograph (SBUH) method was used to calculate runoff rates and volumes (via the commercially available WaterWorks modeling program). This method calculates runoff using "curve numbers" that represent homogeneous types of land cover.

A single curve number (CN) is input to the SBUH model for all pervious surfaces within a particular drainage subbasin; a separate CN is input for all impervious surfaces within a drainage subbasin. The curve numbers are used to estimate the volumes of runoff originating from pervious and impervious surfaces, and the associated rates of runoff contributing to a particular analysis location (i.e., to individual storm drain pipes throughout the two subbasins analyzed). For the purposes of this study, a pervious

runoff CN of 86 was used (representing grass cover on soils of hydrologic group "C"). An impervious runoff CN of 98 was input to the SBUH model to represent all pavement, rooftops, sidewalks, and other impervious surfaces. A tabulation provided by the Washington State Department of Ecology (Ecology) in their *Stormwater Management Manual for the Puget Sound Basin* (1992) was referenced for these specific CN values.

To determine the amount of area within each drainage subbasin that is impervious or pervious, zoning information was utilized. Areas that are zoned by the city of Seattle as "commercial/industrial" land use were assumed to have 90 percent impervious surface coverage. Areas that are zoned as "single-family residential" land use were individually evaluated to estimate the number of homes ("dwelling units") per acre. The percent pervious/impervious cover for these residential areas was then derived using data provided in Ecology's stormwater manual that relate the number of dwelling units per acre to the percent impervious land cover. The impervious surface coverage of single-family residential areas was thus estimated to range from 55 to 62 percent. Multifamily residential areas were assumed to have 75 percent impervious surface coverage. (Note: the Lake Union subbasin is zoned entirely as "commercial/industrial" so the entire subbasin was modeled using 90 percent impervious surface coverage, whereas the local Denny subbasin has a mix of zoned land uses).

In addition to curve numbers associated with pervious and impervious surfaces, the SBUH model inputs include the following: time of concentration, which reflects the travel time of runoff flow to the location being analyzed; rainfall hyetograph; and a portion of rainfall that is intercepted by trees or buildings or that is stored in surface depressions, which does not contribute to surface runoff (assumed to be 0.2 inches).

All of the above information was incorporated into the SBUH model to estimate the characteristics of runoff contributing to various storm drain pipe locations throughout the local and Lake Union subbasins. The calculated runoff rates were then used to determine the required pipe sizes for conveying the 25-year peak runoff flows.

Methodology Used for Sizing Storm Drain Pipes

The WaterWorks computer modeling package also calculates pipe diameters based on runoff flow rates. The model has inputs for pipe diameter, pipe slope, pipe roughness (Manning's "n"), and the associated contributing drainage basin hydrograph. Pipe slopes were input based on ground surface topography as shown on maps obtained from the city of Seattle. Each of the drainage subbasins modeled had sufficient ground slope such that drainage pipes could parallel the ground surface while satisfying the slope criteria set forth by the Seattle Engineering Department. Thus, the pipe slopes were assumed to be equivalent to the ground slope in the location where they would be placed.

The pipe network layouts for the new storm drainage systems were developed based on alignments of existing combined sewer pipes as shown on city of Seattle utility drawings. In addition to the same locations of main trunk lines in the combined sewer system, it was assumed that storm drainage pipes would also be needed in alleys and on side streets to convey surface runoff into the main trunk lines. Thus, the pipe networks resemble the existing combined sewer system, with additional piping in alleys and on side streets where there is currently no piping.

With the information on pipe slopes, lengths, and roughness input for each runoff subbasin modeled (within the local and Lake Union subbasins), the corresponding calculated runoff hydrographs were routed through the pipes and the WaterWorks program calculated the diameters needed to convey the 25-year peak flows. If the

program calculated a diameter of less than 12 inches, 12 inches was assumed as the size of the pipe. In some instances the WaterWorks program calculated a pipe diameter not conventionally used by the city of Seattle, such as 33 inches. In these cases, the next larger conventional pipe size (i.e., 36 inches) was assumed as the pipe size.

Description of the Storm Drainage System Layouts

Lake Union Subbasin (102)

The Lake Union subbasin slopes generally to the north, with a low area in the vicinity of Broad Street and Westlake Avenue. Thus, all of the storm sewer piping from subbasin areas to the south, west, and east would route flows to this low area. North of the low area, along Westlake Avenue on the western side of Lake Union and south of Galer Street, the ground slopes to the east down to Westlake Avenue, and the Westlake Avenue corridor is flat. Therefore, runoff in this section of the subbasin will tend to collect along Westlake Avenue. If subbasin discharges are directed to Lake Union, outfalls along Westlake Avenue north of Broad Street could be used. If subbasin discharges are directed away from Lake Union, storm sewer piping beneath Westlake Avenue could be sloped to route flows south towards the low area near Broad Street and Westlake Avenue, where flows would combine with runoff from the rest of the Lake Union subbasin and be pumped or drained in a tunnel.

Because of the topography of the subbasin, most of the main storm sewer trunk lines would run from south to north. Table 2 shows the streets beneath which the major storm drains would be placed, along with the corresponding diameters of drain pipe.

Table 2. Locations of Major Storm Drains in the Lake Union Subbasin

Street Name and Location	Pipe Diameter(s)
Republican Street east of Fairview Ave	increase to 30" approaching Fairview Ave
Boren Ave north of Denny Way	increase to 36" north of Republican St
Terry Ave north of Denny Way	increase to 21" north of Republican Ave
Westlake Ave south of Denny Way	increase to 24" approaching Denny Way
Westlake Ave north of Denny Way	increase from 30" to 36" approaching Broad St
Ninth Ave north of Denny Way	increase to 27" approaching Westlake Ave
Westlake Ave north of Broad St	up to 21" depending on configuration
Subbasin outfalls to Lake Union (if used):	
Main outfall parallel to Terry Ave	54" from Broad St into Lake Union
Outfalls along southwest side of lake (from eastern side of Westlake Ave)	21" near Lee St, 24" and 36" between Aloha and Valley

Denny Local Basin (Subbasins 103, 104, and 1691)

The Denny Local basin encompasses approximately 531 acres along the southern slope of the Queen Anne hillside and in the downtown commercial area between Denny Way and Virginia Street and includes three separate subbasins (103, 104, and 1691). Storm drains required for separation of these three subbasins were evaluated in an earlier study (Metro, 1987). Because the city of Seattle has recently modified its storm drain design requirements, the results of the earlier study were evaluated to determine whether larger storm drains would be required to meet the new criteria.

As described earlier, the city now requires storm drains to convey the peak runoff from the 25-year, 24-hour storm without surcharging; whereas in the past, storm drains were designed for the 10-year storm, with provisions that permitted surcharging to occur during the 25-year event. Differences between the 10-year and the 25-year storms are summarized below:

	10-Year	25-Year
Total rainfall (inches)	2.74	3.12
Peak 10-minute intensity (in/hr)	1.62	1.86

Three test areas (a 96-acre commercial area in subbasin 103, a 105-acre mixed single-family residential and multifamily residential in subbasin 104, and a 77-acre mixed multifamily and commercial area in subbasin 103) were analyzed under both the 10-year and 25-year storm design storm conditions to highlight differences in storm drain sizing. No consistent differences were noted between the 10-year and 25-year storms. Larger storm drains (the next larger size) were required at only two locations on one trunk line. Therefore, the results from the previous storm drain analysis (with the changes noted for the one trunk line) were used to estimate storm drain quantities for the cost analysis.

Subbasin 103 extends along both the northern and southern sides of Denny Way. The contributing area north of Denny, is located between First Avenue West and First Avenue North, extending as far north as West Galer Street. This portion of the subbasin generally slopes from north to south. Storm drain trunk lines run along the three main north-south streets (First Avenue West, Queen Anne Avenue North, and First Avenue North). The 27-inch Queen Anne Avenue North and 24-inch First Avenue North trunk lines converge with the 24-inch First Avenue West drain at West Harrison Street. Downstream of the junction, the First Avenue West drain increases to 36 inches and continues southward, increasing along the way to 48 inches until it merges with the 60-inch Denny Way trunk line. Below the junction, the Denny Way drain increases to 84 inches and extends approximately 500 feet to the outfall along the Elliott Bay waterfront.

The portion of subbasin 103 that lies south of Denny Way covers most of the Denny regrade area extending from Fourth Avenue to Western Avenue between Denny Way and Virginia Street. The topography in the area between First and Fourth Avenues is relatively flat. The numbered streets are generally graded to drain northwest towards Denny Way, while the intersecting named streets generally drain from northeast to southwest. The topography changes near First Avenue where a steep hillside drops down to the waterfront along Alaskan Way.

The major storm drain trunk line for the area south of Denny Way runs along Western Avenue and merges with the 36-inch Denny Way drain. Smaller collector lines run along the numbered streets and tie into larger trunk lines that run northeast to southwest along the named streets. The intermediate trunk lines then merge with the main Western Avenue drain. The sizes of the intermediate trunk lines where they merge with the Western Avenue drain are summarized below:

Virginia:	15 inches	Cedar:	12 inches
Blanchard:	18 inches	Broad:	15 inches
Bell:	21 inches	Bay:	18 inches
Battery:	24 inches		

North of Cedar Street, the storm drains on Second Avenue (18 inches) and Third Avenue (15 inches) tie directly into the storm drain on Denny Way.

There is a small system that crosses through the center of subbasin 103 south of Denny Way that is not part of subbasin 103. This drain which serves subbasin 1691 runs down Vine Street and collects runoff from areas immediately adjacent to Vine, portions of Fourth Avenue, Third Avenue, Broad Street (north of Denny Way), and the waterfront areas along Elliott Avenue. The 27-inch outfall for this system is located in Elliott Bay at the end of Vine Street. Two smaller outfalls located at Battery Street (27 inches) and Clay Street (42 inches) are also part of subbasin 1691. These two systems serve the waterfront areas west of Western Avenue between Bay and Lenora Streets.

Subbasin 104 is located north of Denny in the Queen Anne area. The topography in this area generally slopes from north to south. The primary storm drain trunk lines run along the numbered streets with smaller collector drains intercepting runoff from the intersecting streets. The individual north-south trunks converge at various locations along Third Avenue West which functions as the central trunk line for the subbasin. The Third Avenue West trunk line increases from 15 inches to 36 inches at West Highland Street where several trunk lines merge and increases to 42 inches below West Kinnear Place after picking up flow from the trunk lines serving the western portions of the basin along West Kinnear Place and West Olympic Place. At West Mercer, where the 36-inch trunk line from Second Avenue West merges with the Third Avenue drain, the drain increases to 54 inches which then continues south to the 66-inch outfall located in the industrial area adjacent to West Thomas Street.

A second 42-inch outfall is required to convey runoff from the southern end of subbasin 104. This smaller system collects runoff from the industrial areas along Elliott Avenue West and from the mixed residential and commercial areas between Second Avenue West and Fifth Avenue West in the southern portion of the subbasin.

Estimated Sizes and Quantities of Storm Drainage System Components

Table 3 shows the estimated lengths of various pipe sizes that would be needed to separate storm runoff from the combined sewer system, for the local and Lake Union subbasins, respectively. Appurtenant structures, such as curb inlets, manholes, catch basins, and piping connections from curb inlets or catch basins to primary storm drains running down the middle of streets were not included in the evaluation. The cost estimates for the storm drain systems consider the need for these appurtenant structures.

Table 3. Estimated Linear Feet of Storm Drain Needed for CSO Separation in the Denny Local and Lake Union Subbasins

Pipe Diameter (inches)	Subbasin 102	Subbasin 103	Subbasin 104	Subbasin 1691
12	32,450	19,720	20,695	5,985
15	5,850	6,310	6,120	975
18	4,200	4,520	4,030	1,925
21	2,800	2,760	1,220	2,065
24	850	2,990	910	2,380
27	800	1,530	1,345	210
30	2,430	970	2,045	200
36	2,400	2,000	5,010	20
42	325	1,510	1,190	0
48	0	1,730	780	0
54	1,000	0	360	0
60	0	200	0	0
72	0	0	700	0
84	0	550	0	0

Discharge Options for Subbasin 102

Separated stormwater flows from Denny local subbasins 103, 104, and 1691 would be discharged to Elliott Bay, possibly after pretreatment for suspended solids removal. The receiving water closest to the topographic low point of Subbasin 102 is Lake Union; however, water quality concerns may override the engineering advantages of diverting flow to the Lake. For the purposes of estimating the total costs of CSO separation, two discharge options were evaluated: 1) storage of the storm flow peak and pumping of the storm base flow to Elliott Bay and 2) conveyance of the total storm flow to Elliott Bay via tunnel. The location of the storage/pumping facility or the head of the tunnel would be in the vicinity of Eighth Avenue and Aloha Street, although the exact location of a storage facility would be dependent on the availability of land along the southwest perimeter of Lake Union. Either discharge option could be preceded by pretreatment.

The maximum 25-year stormwater flow generated within Subbasin 102 is estimated to be 244 cubic feet per second (cfs). A large diameter tunnel (8'0" - 9'0") would be installed to convey this entire flow to Elliott Bay. The alternative, a combined storage and

pumping facility, could be sized to attenuate the volume of water generated during an approximately three hour peak flow through storage in a pond and to pump the non-peak flow of approximately 50 cfs through two parallel 48-inch force mains. A 50-cfs pump station would be similar in size to the Interbay sewage pump station. The volume of water generated in the peak three hours of the storm is estimated at 400,000 cubic feet. A 15-foot-deep storage pond would require a surface area of 0.60 acres. Due to the lack of availability of undeveloped land in this area, tunneling may be the only feasible option.

POLLUTANT LOADING ANALYSIS

The purpose of the pollutant loading analysis was to determine the effect that separation of the combined sewer system in the Denny local and south Lake Union subbasins would have on stormwater and sanitary sewer loadings to Elliott Bay and Lake Union. The analysis focuses on the changes in pollutant loading that might be expected after separation due to the reduction in combined sewer overflows and corresponding increase in stormwater discharges. The need for stormwater treatment to reduce pollutant loadings after separation and various options for providing treatment in an urban setting like Seattle have also been assessed. No attempt has been made to predict changes in receiving water quality.

CSO and Stormwater Quality

There is little site specific information on the quality of combined sewer overflows (CSO) or stormwater runoff in the study area. Annual pollutant loading estimates have been calculated using available data on CSO and stormwater quality from other local studies and on estimates of sewer overflow and stormwater discharge volumes before and after separation.

Data on the quality of combined sewer overflows was collected by Metro (1984) as part of the Toxicant Pretreatment Planning Study (TPPS). Flow-proportioned composite samples were collected from four CSOs (Michigan, Lander, Denny Way, and Hanford) during four overflow events that occurred between January and April, 1982. The average concentrations for the most frequently detected pollutants found in the Denny Way CSO are summarized in Table 4.

Stormwater data used in this analysis were derived from studies conducted by the City of Seattle and Metro on storm drains that discharge into Lake Union and the Ship Canal (Merrill, 1989 personal communication). The monitoring efforts were conducted between 1986 and 1988 to characterize the quality of stormwater from different land uses. As part of these studies, the data were compared with historical data collected by Metro in the late 1970s and early 1980s. The comparisons showed that there has been a significant decrease in the concentration of lead in stormwater from all land uses, presumably due to decreases in the use of leaded gasoline and possibly the shutdown of a local lead smelter which operated on Harbor Island. Results from the 1986-1988 stormwater sampling efforts are summarized in Table 4.

CSO and Stormwater Quantity Estimates

Estimates of annual overflow volumes from the Denny Way CSO and Lake Union CSOs for the proposed control options have been obtained from various planning documents and are based on current estimates from recent modeling efforts (Merrill, 1994 personal communication):

Control Options	Million gallons per year
Denny Way CSO:	
Existing conditions[a]	495
System improvements[b]	322
East Lake Union separation	409
Denny local/South Lake Union separation	233
All options combined	2.5
Lake Union CSOs:	
Existing conditions[c]	86.3
Improved transport[c]	0.41
East Lake Union separation[c]	0

[a] For 1981 to 1983 base period.
[b] Includes proposed enlargement of the Fort Lawton trunk and modification to the University Regulator.
[c] Roberts, 1994 personal communication.

The annual volume of stormwater discharged after separation has been calculated based on rainfall-runoff relationships for the various storm drain basins. Separation projects in the east Lake Union area were evaluated using the SWMM model and are described by Roberts (1994 personal communication). After separation, the amount of stormwater discharged to Lake Union is predicted to increase from its current level of approximately 551 million gallons per year (Mgal/yr) to 712 Mgal/yr. Reduction in overflows discharged is from 86.3 to 0 Mgal/yr, as shown above.

Separation projects in the Denny local and south Lake Union subbasins have been evaluated using the SCS curve number method as described in the King County Surface Water Design Manual (1990). This method calculates the total volume of runoff for individual storms based on land use characteristics in the contributing drainage basin. Runoff curve numbers (CN) are used to predict stormwater runoff based on land use, soil type, vegetative cover, and storage/interception. Separate CNs are applied to pervious and impervious surfaces. For this analysis, a CN of 86 was used for pervious surfaces and 98 was used for impervious surfaces. The four subbasins have been divided into the following land use categories: single-family residential, multifamily residential, commercial, and industrial. The amount of impervious surface for each land use category used in the calculations is shown below:

Land Use	Percent Impervious
Single-family residential	62
Multifamily residential	75
Commercial	90
Industrial	90

The CN method is a single event-type model. To estimate the total annual volume of runoff, separate calculations were performed for several different size storm events. The resulting runoff volumes for the individual storms were then multiplied by the number of storms in each size class that would be expected during an average year and then summed to estimate total annual runoff volumes from each subbasin. Rainfall statistics reported by R.W. Beck (1993) were used to characterize average rainfall patterns in Seattle. Annual stormwater volume estimates were then reduced by 20 percent in residential areas to account for rooftop surfaces that would continue to discharge to the sanitary sewer after separation. The results of the runoff calculations are summarized in Table 5.

Evaluation of Possible Stormwater Treatment Technologies

Stormwater runoff contains a variety of pollutants, including total suspended solids, metals, nutrients, and organic contaminants. Therefore, sewer separation projects must be evaluated to determine how increases in the frequency and volume of stormwater discharges and its associated pollutants after separation, will effect overall loadings to the receiving water environment. It is possible that in the case of some contaminants, the reduction in CSO loadings may be entirely offset by the increased loading from stormwater, with no net benefit to the receiving water environment.

Under the antidegradation policy established in the Washington state water quality standards (WAC 173-201A-070), nonpoint sources responsible for pollution of state waters must be provided with all known, available, and reasonable best management practices. Best management practices for stormwater are described in Ecology's 1992 *Stormwater Management Manual for the Puget Sound basin*. Although a large part of manual is devoted to describing practices designed to reduce the amount of pollution generated by nonpoint sources, it is recognized that structural controls (i.e., treatment) may also be needed to control nonpoint pollution. The manual provides design criteria for a number of technologies that can be used to treat stormwater runoff.

Stormwater treatment has been evaluated as a way to reduce the pollutant loadings from sewer separation projects in the Denny local and south Lake Union subbasins. Because of the highly urbanized nature of these subbasins and the limited space available for construction of stormwater treatment facilities, it will not likely be economically feasible to construct many of the standard treatment technologies recommended in the Ecology manual, particularly those that require large amounts of land (e.g., wetponds, biofilters). Therefore, this analysis focuses on technologies that could be reasonably constructed in an urban setting.

End-of-pipe treatment at a stormwater treatment facility constructed along the Elliott Bay waterfront has been considered as one of the other control alternatives. This report evaluates smaller-scale treatment technologies that could be installed on the storm drain collectors to treat runoff from individual catchment areas. Two technologies, compost

filters and vortex separators have been considered, because both could be installed in underground vaults which would minimize interference with land surface activities. These systems will need to be installed beneath road rights-of-way to permit access by the city for construction and maintenance purposes. The main limitation would be possible interference with other underground utilities. Site-specific conditions will need to be evaluated when selecting locations for installation of underground treatment facilities.

Compost Filters

Leaf/vegetative compost filters are a relatively new, experimental technology for treating stormwater that has been developed and patented by W & H Pacific (1993). These systems treat stormwater by routing it through a filter containing composted leaf/vegetation waste. Pollutants present in the stormwater adsorb onto the compost media and are retained in the filter. The medium is periodically replaced to maintain treatment effectiveness. Because these systems are relatively new, long term maintenance requirements have not been well established. However, annual replacement of the compost material is recommended (W & H Pacific, 1993). A schematic of a typical vault-type installation is provided in Figure 2.

Performance. Pollutants are removed by filtration, cation exchange, adsorption, and biodegradation. Compost systems are capable of filtering out many of the particulates and particulate-bound pollutants present in urban runoff. Performance tests on a prototype facility constructed in Portland, Oregon have shown favorable results for the removal of metals and petroleum hydrocarbons (W & H Pacific, 1993). The prototype facility consists of a 100- by 16-foot swale lined with composted leaf/vegetation in which several baffles have been constructed to retain stormwater and permit infiltration through the compost media. The facility receives runoff from a 27-acre basin and is designed for a peak hydraulic loading of 6.7 cfs. Removal efficiencies from the second year of operation (inlet/outlet samples collected during six storms monitored between September 1992 and March 1993) are summarized below (W & H Pacific, 1993):

Pollutant	Percent Removal
Total suspended solids	85
Cadmium	6
Chromium	71
Copper	59
Lead	86
Zinc	77
Total petroleum hydrocarbons	90

No information is available on the removal of phthalate esters which are commonly found in sewer overflows and to a lesser extent, in urban runoff. Given the relatively low organic carbon adsorption coefficient (K_{oc}) reported for phthalates (2.65 for diethyl phthalate) (Public Health Service, 1993), it does not appear that adsorption on the compost media would occur to a great extent. Therefore, for this analysis, it has been

conservatively assumed that zero removal of phthalates would occur in the compost filter.

Drop-in vault units are expected to achieve similar removal rates. Drop-in units are smaller to permit installation within an underground vault. Several different sizes are currently available. The largest unit recommended for vault installation is about 8 feet by 14 feet, which has a hydraulic capacity of about 0.5 cfs.

Requirements for Denny Local and South Lake Union subbasins. The number of compost filters that would be required to treat runoff from the Denny local and south Lake Union subbasins has been evaluated based on land use characteristics in the individual subbasins and the hydraulic capacity of the filter units. For planning purposes, it has been assumed that compost filters would be installed at multiple locations in each subbasin with each installation comprised of two 8- by 14-foot units installed in series (approximate capacity = 1 cfs). The total cost per installation would be about $24,000 (includes materials and installation costs). It should be noted that a vertical drop of approximately 2.2 feet must be provided between the inlet and outlet of the filter to enable effective infiltration through the media. Therefore, a more detailed analysis of each system will be needed to determine whether the storm drain system can support multiple installations without adversely affecting system hydraulics.

Treatment effectiveness and filter requirements have been evaluated for the following two design storms:

Ecology water quality storm:	6-month, 24-hour (1.35 inches)
King County storm:	one-third of the 2-year, 24-hour (0.65 inches)

The Ecology design storm accounts for approximately 90 percent of the total rainfall that would be expected to occur during an average year (i.e., only 10 percent of the total annual rainfall is contributed by storms greater than the 6-month, 24-hour event) (Ecology, 1992). Assuming that the amount of runoff would be proportional to the rainfall, it can be estimated that a treatment system designed to handle the runoff from the Ecology storm would be capable of treating about 90 percent of the runoff that occurs in a typical year, with only about 10 percent bypassed around the treatment facility. The smaller King County water quality design storm accounts for about 60 percent of the total annual rainfall. Therefore, it is assumed that a system designed to accommodate the King County storm would treat about 60 percent of the runoff generated in the basin each year, bypassing the remaining 40 percent of runoff generated during events larger than the design storm.

Peak runoff rates for single (62 percent impervious) and multifamily residential (75 percent impervious) development and commercial/industrial (90 percent impervious) development were estimated using the Waterworks rainfall-runoff model which is based on the Santa Barbara Urban Hydrograph method. The same CNs described in the section on stormwater quantity estimates (i.e., 86 for pervious and 98 for impervious) were used to determine the requirements for compost filters. The results indicate that to be able to treat runoff from storms less than or equal to the Ecology design storm, one compost filter would be required for approximately every 5 acres of single-family residential in the basin and for every 4 acres of multifamily and commercial/industrial in the basin. Using the King County design storm, the size of the catchment area can be increased to about 15 acres for single-family residential, 12 acres for multifamily residential, and about 10 acres for commercial/industrial land use.

Based on the land use characteristics in the Denny local and south Lake Union subbasins, if compost filters were installed to treat all the runoff from those areas to be separated, the following numbers of filters would be required in each subbasin:

Subbasin	Design Storm	
	Ecology	King County
102	62	25
103	53	21
104	53	19
1691	22	9
Total	190	74

Based on these results, it does not appear that it will be practical to treat all runoff from the separated areas in compost filters. Although using the smaller King County storm for design purposes results in fewer filters than the Ecology storm, the total number of filters (74) still represents a large capital investment ($1.8 million not including costs for utility relocation) as well as the annual costs for operation and maintenance of these systems.

Vortex Separators/Swirl Concentrators

Vortex separators/swirl concentrators have been used for primary settling in municipal wastewater treatment plants and to treat combined sewer overflows. These devices remove coarse-grained sediment and floatables as well as regulate flow. Although there are several types, all separators function by directing flow around the perimeter of a cylindrical shell to create a swirling, vortex pattern. The swirling action throttles the incoming flow and concentrates the solids at the bottom of the unit. In CSO and stormwater applications the underflow, which contains a higher concentration of solids, would then be routed back to a nearby sanitary sewer, and the clarified overflow would be discharged to receiving waters. Between 3 and 10 percent of the total flow is generally returned to the sanitary sewer via the underflow system (EPA, 1993).

Performance. Concentrators are typically designed to remove 90 percent of the grit-sized particles (EPA, 1993). Grit-sized particles with diameter of 0.2 mm have a settling velocity of about 2.5 cm/sec. A 12-foot diameter prototype concentrator tested installed on a combined sewer in Syracuse, New York, achieved between 18 and 55 percent removal of total suspended solids with flow rates ranging from 0.2 MGD to 7.6 MGD. The results indicated that removal efficiencies greater than 50 percent were possible when the influent concentrations of were above about 250 mg/L (EPA, 1993).

To evaluate the effectiveness of swirl concentrators for treating urban runoff, the distribution of particle settling velocities in urban runoff was compared to the concentrator design capacity (i.e., 90 percent removal of particles with settling velocities greater than 2.5 cm/sec). A typical distribution profile for particle settling velocities in urban runoff, based on the results of the Nationwide Urban Runoff Program (NURP) study, is shown below (Driscoll et al., 1986):

Size Fraction	Percent of Particle Mass in Runoff	Settling Velocity (cm/sec)
Silt	0-20	0.0025
Silt	20-40	0.0025
Silt	40-60	0.013
Very fine sand	60-80	0.059
Sand	80-100	0.550

Because the settling velocities for most suspended solids in urban runoff are significantly lower than the separator design capacity, it does not appear that a swirl separator would be effective in treating urban runoff. This is particularly important when considering the other pollutants commonly found in urban runoff, such as metals and organic contaminants which adhere to the particulates present in runoff. These other contaminants are usually associated with the finer-grained particles which have a greater amount of surface area per volume than the larger grit-sized particles. Therefore, it does not appear that separators will significantly improve the quality of stormwater discharged from the Denny local and south Lake Union subbasins after separation.

Because the swirl/vortex separators are more effective in removing the coarse grained material, they may reduce the amount of sediments that would tend to deposit near the outfall. However, because they selectively remove the larger particles, which carry less pollutants than the finer-grained materials, it is uncertain whether these devices would have a significant effect on the sediment impact zone offshore of the outfall.

In addition, the underflow from the swirl separators and vortex concentrators which constitutes approximately 3 to 10 percent of the total flow and contains the concentrated sediments must be discharged back into the sanitary sewer. Therefore, it is unlikely that these devices would be effective in the Denny Way CSO, because this system has little, if any capacity to handle additional flow. Because of these limitations, swirl concentrators and vortex separators are not recommended for use with the Denny Way separation projects.

Loading Comparisons

For comparison purposes and to assess potential impacts on water quality, stormwater pollutant loadings after separation have been calculated for two conditions: 1) no treatment of stormwater and 2) all runoff treated in compost filters or equivalent prior to discharge. The loading estimates for the without treatment option were calculated as the product of total annual runoff as shown in Table 3 times the average concentration in stormwater runoff as shown in Table 4.

For the treatment option, the total annual loading described above was reduced according to the pollutant removal efficiencies described earlier for the compost filters. In addition, it was assumed that only about 60 percent of the runoff in any given year was routed

through the filters, with the remaining 40 percent being bypassed around the filters and discharged without treatment to the receiving waters (i.e., King County design storm).

Elliott Bay. Estimated pollutant loadings to Elliott Bay before and after separation of the Denny local and south Lake Union subbasins are summarized in Table 6. Existing conditions are based on the estimated annual discharge from the Denny Way CSO for the 1981 to 1983 base period using available data for the Denny Way CSO from the Metro TPPS study to characterize average pollutant concentrations in the overflows. The effects of other control alternatives that are being considered to reduce overflows at Denny Way are also provided for comparison purposes.

To evaluate the effects of separation in the Denny local and south Lake Union subbasins, two possible scenarios for handling runoff have been considered: 1) runoff from both the Denny local area and the south Lake Union area are routed to Elliott Bay (this would require a pump station/tunnel to convey flows from south Lake Union to Elliott Bay) and 2) only the runoff from the Denny local area (subbasins 103, 104, and 1691) and discharged to Elliott Bay (runoff from south Lake Union subbasin 102 would be discharged to Lake Union).

As shown below, if the Denny local and south Lake Union separation projects are evaluated separately, without taking into account the effects of other proposed controls, reductions in the combined CSO and stormwater loadings would be achieved after separation for cadmium, copper, PAH, and total suspended solids, under both scenarios, even if stormwater is not treated:

	Percent reductions in annual loading			
	Cadmium	Copper	PAH	Total Suspended Solids
All subbasins routed to Elliott Bay:				
Without treatment	34	39	23	19
With treatment	35	45	43	36
Subbasin 102 routed to Lake Union:				
Without treatment	29	35	19	4
With treatment	30	43	37	29

However, without treatment, the annual loadings of lead and zinc to Elliott Bay after separation would increase by about 20 to 50 percent and by about 0 to 20 percent, for scenarios 1 and 2, respectively. With treatment, lead and zinc loadings would both be reduced by about 3 to 19 percent and 14 to 26 percent, respectively.

If all the other control options being considered to reduce overflows at Denny Way are implemented, including separation in the Denny local and south Lake Union subbasins, the annual loadings for all pollutants would be reduced from the current levels.

Lake Union. Estimated pollutant loadings to Lake Union before and after separation of the Denny local and south Lake Union subbasins are summarized in Table 7. Currently, there are no overflows to Lake Union from either the Denny local or the south Lake Union systems; both of these subbasins now overflow to Elliott Bay. Existing conditions in these subbasins are based on the estimated annual discharge from the seven CSOs in Lake Union (numbers 125, 126A, 128, 175, 130, 132, and 135) for the 1981 to 1983 base period using available data from the Metro TPPS study to characterize average pollutant concentrations in the combined sewer overflows. Existing stormwater discharges were estimated by Roberts (1994 personal communication) using the SWMM model.

After separation, runoff from the south Lake Union area (subbasin 102), which naturally drains toward Lake Union, could either be discharged to the lake or be collected and pumped to Elliott Bay. Discharge of runoff from subbasin 102 to Lake Union, would represent an additional loading to the lake that does not currently exist. The effect of this additional discharge has been evaluated in the context of other separation projects that are being proposed in the Lake Union basin. Two alternatives for controlling CSOs in Lake Union have been proposed (Roberts, 1994 personal communication):

- Improved transport in the combined sewer system
- Partial separation of the combined sewers on the eastern side of Lake Union (numbers 125, 126A, 128/175, 130, 132, and 133).

As described by Roberts (1994 personal communication), improved transport would result in no additional stormwater discharges to the lake. The proposed partial separation of the eastern side basins would require construction of four new storm drain outfalls in the lake. Stormwater loadings to Lake Union from these partial separation projects have been previously described (Roberts, 1994 personal communication) and are summarized in Table 5. No treatment is currently proposed for the additional stormwater discharged by these partial separation projects.

The effect of stormwater discharges from subbasin 102 after separation of the south Lake Union basin, has been evaluated by combining the expected stormwater loadings from the south Lake Union subbasin with the loadings predicted for the other two control alternatives in Lake Union and comparing the resultant loadings with the existing CSO/storm drain loadings. Two options, 1) no treatment of stormwater from subbasin 102 and 2) treatment via a compost filter system or equivalent (only for runoff from subbasin 102) have been considered in the loading evaluations.

As shown in Table 7, separation of the south Lake Union subbasin combined with improved transport in the combined sewers serving the eastern side of the lake would result in small decreases in annual loadings for cadmium, chromium, copper, total phthalates, and total suspended solids with or without treatment of the stormwater from south Lake Union. Annual loadings for lead and zinc would increase by 13 and 6 percent, respectively, if untreated stormwater from the south Lake Union subbasin is discharged to the lake. If stormwater is treated prior to discharge, the lead loadings would remain the same and zinc loadings would decrease by about 7 percent. For PAH, loadings to Lake Union would increase after separation, regardless of whether or not the stormwater is treated prior to discharge. With partial separation of the eastern side basins (no treatment proposed) and complete separation of the south Lake Union area, annual loadings for copper, lead, zinc, PAH, and total suspended solids would increase with or without treatment of the runoff from subbasin 102.

Spill Potential

Spills from transportation-related sources also pose a potential threat to receiving water quality in areas served by separate storm drain systems. In 1992 and 1993, approximately 91 percent of the spills reported to Ecology that occurred in the Seattle industrial area involved petroleum compounds. Quantities were generally less than 100 gallons (Adolfson, 1994 personal communication).

The City of Seattle Engineering Department, Transportation Division has identified intersections at Broad Street and Denny Way and at Elliott Way and Vine Street (both are in the Denny local subbasin) as having high accident rates (>10 per year). Adolfson (1994 personal communication) calculated the probability of spills involving hazardous materials for various intersections in the Seattle industrial area based on historical accident rates and estimated truck traffic. The probabilities of accidents at the Broad/Denny and Elliott/Vine intersections were one every 17 years and one every 29 years, respectively. Other major intersections in the city that have not been characterized as having a high accident rate were evaluated using a standard city-wide accident rate. For these intersections, the probability of a hazardous-material spill was estimated as once every 56 years.

Adolfson, M. Personal communication (memorandum to Steve Merrill, Brown and Caldwell Consulting Engineers), Adolfson and Associates, Inc., Seattle, WA, February 7, 1994.

Driscoll, E.D., D. DiToro, D. Gaboury, and P. Shelley. *Methodology for Analysis of Detention Basins for Control of Urban Runoff Quality.* EPA 440/5-87-001. Woodward-Clyde Consultants, Walnut Creek, CA, 1986.

Ecology. *Stormwater Management Manual for the Puget Sound Basin (The Technical Manual).* 91-75. Washington State Department of Ecology, Olympia, WA, 1992.

EPA. *Manual for Combined Sewer Overflow Control.* EPA/625/R-93/007. U.S. Environmental Protection Agency, Office of Research and Development, Washington, D.C., 1993.

King County. *Surface Water Design Manual.* King County, Department of Public Works, Seattle, WA, 1990.

Merrill, S. Personal communication (phone conversation with Beth Schmoyer, Herrera Environmental Consultants), Brown and Caldwell Consulting Engineers, Seattle, WA, February 9, 1994.

Merrill, S. Personal communication (letter to Claudia Corson, Seattle Drainage and Wastewater Utility), Brown and Caldwell Consulting Engineers, Seattle, WA, May 16, 1989.

Metro. *Metro CSO Plan Finalization, Technical Memorandum - Task 2.01.* Gordon Culp, CWC-DHR, Inc., 1987.

Metro. *TPPS Technical Report A2: Collection System Evaluation, Data Appendices.* Toxicant Pretreatment Planning Study, Report No. 4B. Municipality of Metropolitan Seattle, Water Quality Division, Seattle, WA, 1984.

Pfaender, M. Personal communication (telephone conversation with Barbara Zaroff, Herrera Environmental Consultants), Seattle Engineering Department, January 24, 1994.

Public Health Service. *Toxicological Profile for Diethyl Phthalate (Draft).* U.S. Department of Health and Human Services, Agency for Toxic Substances and Disease Registry, Washington, D.C., 1993.

R.W. Beck. *Hydrologic Analysis for Lake Washington Pollution Abatement Project.* Prepared for the City of Renton. R.W. Beck and Associates, Seattle, WA, 1993.

Roberts, C. Personal communication (memorandum to Jennie Goldberg, Seattle Drainage and Wastewater Utility), Brown and Caldwell Consulting Engineers, Seattle, WA, February 1, 1994.

W & H Pacific. *Compost Storm Water Filter (CSF). Technical Memorandum No. 12: Second Year Test Results (1992-1993) for the 195th Avenue CSF™ Prototype.* Portland, OR, 1993.

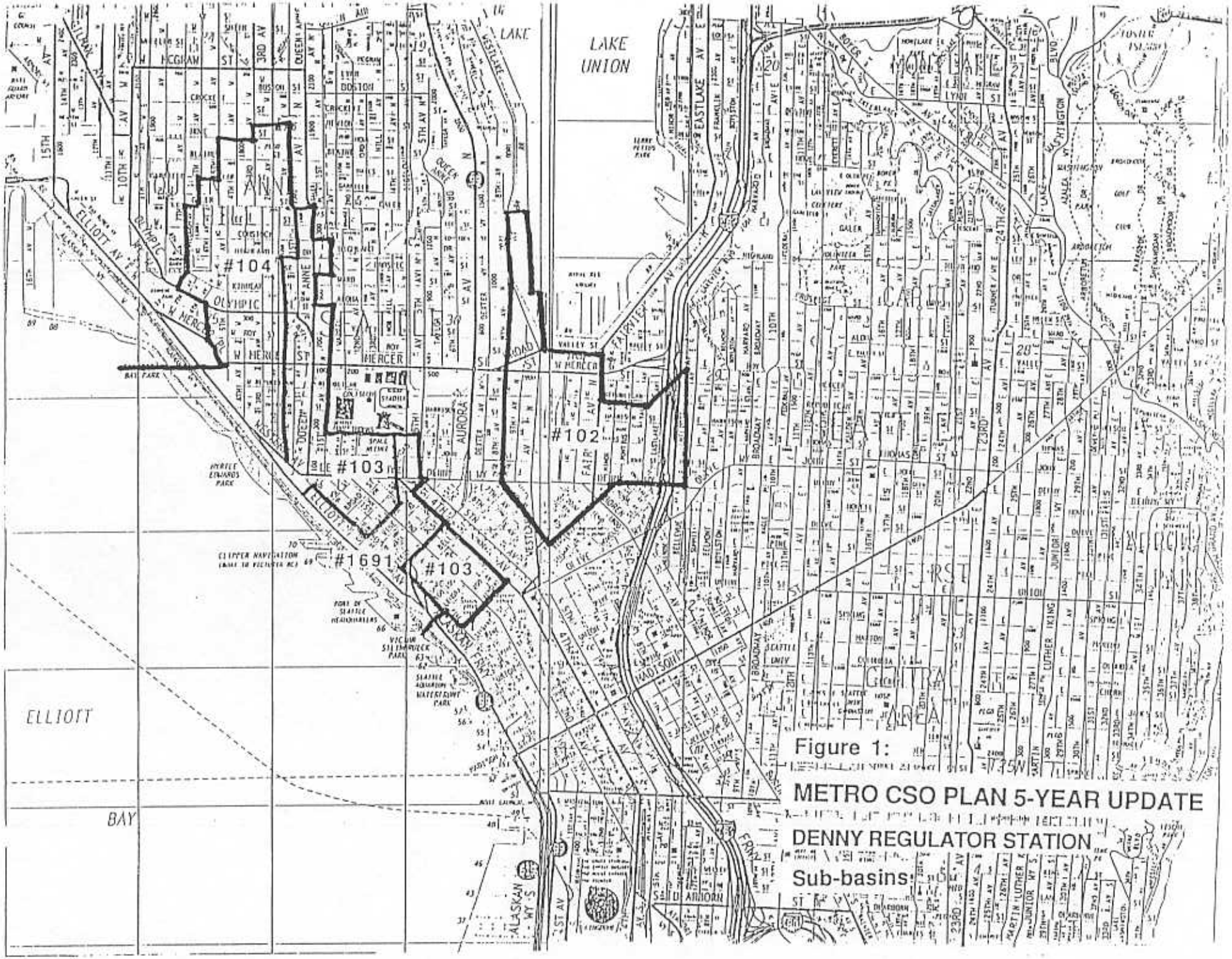

Figure 1:

METRO CSO PLAN 5-YEAR UPDATE

DENNY REGULATOR STATION

Sub-basins

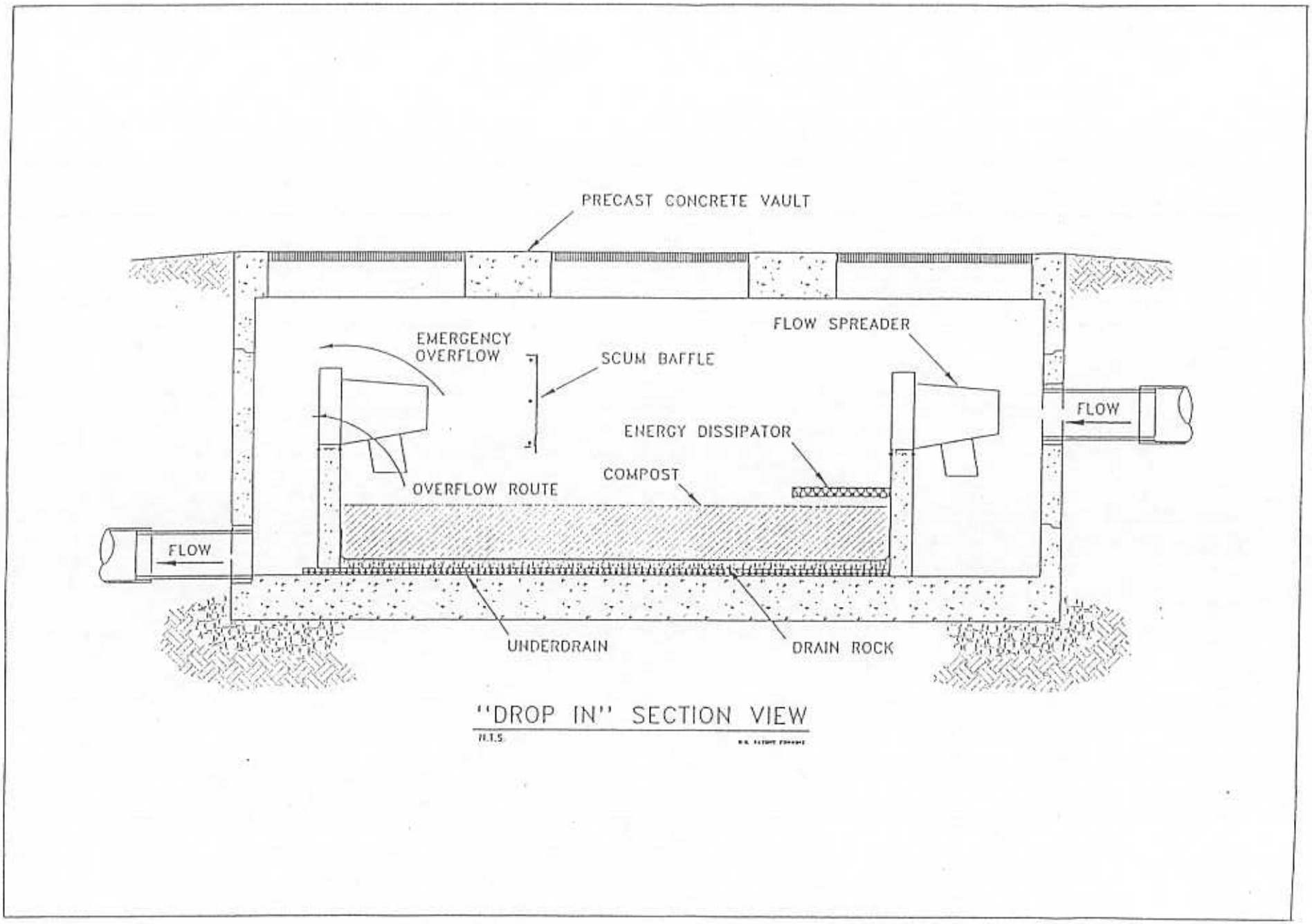

Figure 2. Schematic of a compost filter vault installation.

Source: W & H Pacific (1993)

Table 4. Available data on stormwater and CSO quality in the Seattle area.

	Cadmium (ug/L)	Chromium (ug/L)	Copper (ug/L)	Lead (ug/L)	Zinc (ug/L)	PAH (a) (ug/L)	Total Phthalate (ug/L)	Total Suspended Solids (mg/L)
Stormwater (b)								
Commercial	0.4	3.1	27	57	149	4.6	1.6 g	46
Highway	0.5	5.4	21	60	167	1.1	0.9 g	50
Industrial	1.3	11.7	75	73	290	1.3	0.8 g	59
High density residential	1.7	11.5	53	83	288	3.4	6.7 g	101
Low/medium density residential	1.4	3.4	13	24	88	2.1	0.7 g	27
Denny Way CSO (c)	2.6	26	75	57 d	230	12	132 e	109
Average CSO (f)	3.4	40.5	62	57 d	227	3	54.2 e	119

a) Polycyclic aromatic hydrocarbons.
b) Merrill 1989 personal communication.
c) Denny Way CSO (Metro 1984).
d) Data from 1986-1988 show that lead concentrations in stormwater have declined in recent years. Therefore, the more recent data for lead in stormwater have been used to characterize CSO discharges.
e) Sum of di-n-phthalate, butylbenzyl phthalate, and di-octyl phthalate.
f) Geometric mean for data from Hanford, Lander, Michigan, and Denny Way CSOs (Metro 1984).
g) Sum of bis(2-ethylhexyl)phthalate, butylbenzyl phthalate, di-n-octyl phthalate, and diethyl phthalate.

Table 5. Annual stormwater volume estimates for the Denny local and south Lake Union subbasins after separation.

	Denny Local						South Lake Union	
	Subbasin 103		Subbasin 104		Subbasin 1691		Subbasin 102	
	(acres)	(AF/yr)	(acres)	(AF/yr)	(acres)	(AF/yr)	(acres)	(AF/yr)
Commercial	182	379	42	87.6	87	181	245	511
Highway	0	0	0	0	0	0	0	0
Industrial	0	0	15.8	32.9	0	0	0	0
High density residential	28.9	38.8	175	211	0	0	0	0
Low/medium density residential	0	0	0	0	0	0	0	0
Total	211	418	233	332	87	181	245	511

Table 6. Pollutant Loadings to Elliott Bay before and after separation of Denny local and south Lake Union subbasins.

	Flow (Mgal/yr)	Cadmium (lb/yr)	Chromium (lb/yr)	Copper (lb/yr)	Lead (lb/yr)	Zinc (lb/yr)	PAH (b) (lb/yr)	Total Phthalates (lb/yr)	Total Suspended Solids (lb/yr)
Existing Denny CSO Loading (a)	495	10.74	107	310	235	950	49.56	545	450,201
Denny CSO loading with controls (h)									
System improvements (c)	322	6.97	69.7	201	153	617	32.19	354	292,403
East Lake Union separation (d)	409	8.9	88.8	256	195	785	40.96	451	372,075
Denny local/south Lake Union separation (e)	233	5.06	50.57	146	111	447	23.34	257	212,004
All options combined	2.5	0.05	0.54	1.56	1.19	4.80	0.25	2.75	2,274
Stormwater after separation (f)									
Without treatment	303	1.98	14.3	90.2	163	484	10.5	7.44	154,845
Compost filter	303	1.90	8.22	58.3	79.0	260	4.84	7.44	75,874
Stormwater after separation (g)									
Without treatment	470	2.53	18.6	128	242	691	16.9	9.66	218,685
Compost filter	470	2.44	10.7	82.5	117	372	7.8	9.66	107,156

a) For 1981-1983 base period (used to evaluate all CSO control alternatives).
b) Polynuclear aromatic hydrocarbons.
c) Includes enlargement of Fort Lawton trunk, modification to University Regulator.
d) City of Seattle proposed partial separation projects on east side of Lake Union (CSO numbers 125, 126A, 128, 175, 130, 132, and 135).
e) Separation of Denny local and Lake Union basins (subbasins 102, 103, 104, and 1691)
f) Average annual loading for stormwater discharged from new storm drains serving Denny local (subbasins 103, 104, and 1691). Assumes runoff from subbasin 102 will discharge to Lake Union after separation.
g) With all new storm drains serving Denny local and south Lake Union discharging to Elliott Bay (subbasins 102, 103, 104, and 1691).
h) The effect of each control option on overflows at Denny Way is evaluated separately.

Table 7. Pollutant Loadings to Lake Union before and after separation of south Lake Union subbasin (102).

	Flow (Mgal/yr)	Cadmium (lb/yr)	Chromium (lb/yr)	Copper (lb/yr)	Lead (lb/yr)	Zinc (lb/yr)	PAH (b) (lb/yr)	Total Phthalates (lb/yr)	Total Suspended Solids (lb/yr)
Existing CSO (c)	86.3	2.4	29.1	44.6	41	163	0.6 a	56.6	85,700
Existing storm drain (d)	551	3.7	28.5	143	262	538	9.7	5.5	225,300
Total	638	6.1	57.6	187	303	701	10.3	62.1	311,000
Improved transport									
CSO loading (c)	0.41	0.01	0.14	0.2	0.2	0.8	0.003	0.27	400
Total (CSO + storm drain) (c,d)	552	3.7	28.6	143	262	539	9.70	5.80	225,700
With South Lake Union separation (e)									
Without treatment	718	4.26	32.9	180	341	745	16.1	8.02	289,540
With treatment (compost filter)	718	4.24	31.1	167	300	650	12.6	8.02	256,981
Partial separation of eastside basins									
CSO (j)	0	0	0	0	0	0	0	0	0
Stormwater (new storm drains) (f)	160	1.10	8.30	41.5	76.3	157	2.8	1.6	65,500
Total (CSO + storm drain) (c,d)	712	4.80	36.8	184	338	694	12.5	7.1	290,800
With South Lake Union separation (e)									
Without treatment	1038	5.36	41.1	221	417	901	18.9	9.32	354,640
With treatment (compost filter)	1038	5.34	39.3	208	377	806	15.4	9.32	322,081

a) For 1981-1983 base period (used to evaluate all CSO control alternatives).
b) Polynuclear aromatic hydrocarbons.
c) Overflow from CSOs 125, 126A, 128/175, 130, 132, 133, and 135 (Roberts 1994 personal communication).
d) Runoff from storm drain basins 5, 8, 10, 11, 12, and 19 (Roberts 1994 personal communication).
e) With new storm drains serving subbasin 102 routed to Lake Union.
f) New storm drains at E. Martin St., E. Allison St., E. Lynn St., and E. Garfield St. (Roberts 1994 personal communication).

APPENDIX J

Metro CSO 5-Year Update

Transportation-Related Risk of Spills

Metro CSO

5-Year Update

Transportation-Related Risk of Spills

Seattle Industrial Area

Prepared by

Adolfson Associates, Inc.

February 1994

EXECUTIVE SUMMARY

Adolfson Associates, Inc., (AAI) attempted to evaluate the potential risk of transportation-related spills of hazardous materials along major roadway corridors within areas which have separate storm sewers or which have been designated for separation in previous planning studies. The purpose of this evaluation was to provide an understanding of the range of potentially hazardous materials which could be introduced to the storm drainage/CSO system in the Seattle industrial area and the probability (or risk) of such spill events resulting from with traffic accidents. High risk areas may require construction of spill prevention or containment facilities, the cost of which should be considered when performing cost analyses for alternative evaluation.

To simplify the risk evaluation process, the wide array of hazardous materials transported on the public roadway system was characterized into one of three categories based upon the physical properties of the material. These categories included: 1) materials that float on water, such as petroleum products and most fuels (floaters), 2) materials that are soluble in water, such as acids (mixers), and 3) materials that are more dense than water, such as organic solvents (sinkers). Based upon review of reported spills along transportation corridors throughout the state, the type of material most likely to be spilled as a result of a transportation accident is in the floater category. Approximately 91% of all transportation related spills reported to the Washington Department of Ecology (Ecology) in 1992-1993 were floaters; approximately 9% of roadway spills reported were in the mixer category. No spills of sinker category materials in the public right of way were reported to Ecology during this time period.

It was determined that a hazardous material release associated with traffic accidents at high accident rate intersections on designated truck routes may be expected every 3 to 5 years. If spills on private property (loading docks, for example) are considered, the frequency of occurrence may rise to once every one or two years in the areas surrounding these intersections. The highest risk intersections are located within areas designated for partial sewer separation in Metro's 1988 CSO Control Plan. The high probability of spills in this area justifies the addition of mitigation measures, including spill prevention programs and spill containment facilities (tanks or low flow diverters) to storm water separation projects.

AAI concluded that the highest priority for mitigation or spill prevention/containment facilities within public rights-of-way are those roadway sections which are designated truck routes and which have historically high accident rates. In those areas, mitigation should be considered to minimize the risk of hazardous release of contaminants to receiving water bodies. Mitigation measures could include steps to reduce accident rates along truck routes. In high risk areas, it may also be advisable to implement spill containment facilities/diversion structures which could contain or divert at least 100 gallons of spilled materials. Based upon historical information, it appears that this volume of containment would be adequate for approximately 90% of all spills. Any containment facility design should address the high probability that the spilled material will float on water.

STUDY METHODOLOGY AND FINDINGS

The following sections describe the study area, briefly discuss the types of contaminants which are subject to accidental spillage, describe the kinds of sites where contaminant spillage may occur, and describe the key findings of the study and their implications.

Study Area

The area evaluated was the industrial area of Seattle between Elliott Bay and I-5, bounded by Denny Way on the north and the West Seattle Freeway on the south. This corridor includes most major commercial roadways and designated truck routes in the Seattle industrial area. This area was evaluated because industrial areas receive the highest volume of truck traffic, including trucks transporting hazardous materials, and accordingly present the highest potential for spills. By characterizing the risk of transportation-related spills, we can determine the potential for hazardous material releases that could enter the storm drainage system and ultimately be discharged to receiving waters. It is important to evaluate this risk when assessing the comprehensive impacts of storm sewer separation and potential costs associated with spill prevention/containment.

Types of Contaminants

The range of chemicals that might be conveyed to a storm drainage system or combined sewer overflow (CSO) in an urban industrial setting is nearly unbounded. Potential materials being transported, stored, and used within Seattle industrial areas include: 1) containers unloaded from ships being transported through the area to storage warehouses and for general distribution; 2) hazardous materials used or produced by Harbor Island industries (toxic organic solvents, industrial feedstocks, metal cations); and 3) petroleum and petroleum derivatives from automobile and truck traffic. In order to make this analysis manageable, the wide variety of potential contaminants was grouped into three broad categories based upon physical properties (e.g., density and solubility) that govern their interaction with water. Generally these categories can be summarized into materials that float on water, are miscible with water, or are more dense than water. We have characterized them as floaters, mixers, or sinkers. Table 1 summarizes reported spills according to contaminant type and volume.

Floaters

This category of contaminants is characterized by organic materials with densities less than water and which therefore tend to float on water. Most petroleum derivatives and a wide variety of industrial feedstocks are included in this category. Typical species include industrial petroleum products, (gasoline, oil products, octane, hexane, cyclohexane), and industrial feedstocks (toluene, the xylenes, benzene, vinyl chloride, furan).

Table 1. Reported Spills According to Contaminant Type and Volume

CATEGORY OF CONTAMINANT [1]			ALL SPILLS REPORTED						ROADWAY SPILLS REPORTED				
	Percentage of all spills reported	Percentage of reported roadway spills	Percentage of Spills Reported According to Contaminant Type and Volume (gallons) [1, 2]						Percentage of Spills Reported According to Volume of Spill (gallons) [1, 2, 3]				
			>5000	2000-5000	1000-2000	100-1000	50-100	<50	>5,000	1,000-5,000	100 - 1,000	<50-100	<50
Floaters	78	91	0.7	--	2	13	8	73	0	0	13	6	83
Mixers	17	9	--	--	4	7	6	70	0	0	0	0	100
Sinkers	5	--	--	--	--	--	6	75	0	0	0	0	--

1 Data compiled from spill records made to the Washington State Department of Ecology, 1992-1993 (approximately 300 spills reported). See references.

2 Volume was reported for approximately 80% of spills.

3 Roadway Traffic Spills represent approximately 20% of total spills reported to the Washington State Department of Ecology, 1992-1993.

Mixers

Materials in this category are characterized by high solubility and densities close to that of water. These materials are therefore miscible with water. A typical material within this category will become widely dispersed within water it contacts and will flow in the prevailing flow direction. This category includes materials such as industrial inorganics (ammonia, concentrated acids and bases, fertilizers, anti-freeze), major anions (sulfate, chloride and nitrate) and soluble metal complexes, such as ferrous iron.

Sinkers

Chemicals in this category of contaminants are characterized primarily by a density greater than that of water and by low solubility in water. Materials in this category will not mix with water but will sink downward through accumulated water and sediment and migrate along the slope of impervious layers such as cement and asphalt. Typical species within this category include most of the chlorinated or brominated alkane solvents such as PERC (tetra chloroethylene), TCE (trichloroethylene), 1,1,1-trichloroethane and their breakdown products, the chlorinated phenols, chlorobromobenzenes, and certain pesticides such as ethylene dibromide, and liquid solutions of 2,4-D and 2, 4-T. The volatile chlorinated solvents (PERC, TCE, etc.) are particularly prevalent in industrial and commercial areas and are widely used as degreasers.

Volume of Spills

Within the transportation corridor, approximately 89% of reported spills of floaters were less than 100 gallons in volume; 83% of the reported spills were less than 50 gallons. For mixers, 100% of all reported spills in the transportation corridor were 50 gallons or less in volume. This is significant in that most reported spills are not catastrophic events, such as 5,000-gallon releases resulting from a tanker truck accident, but are likely caused by fuel tank rupture or failure of a smaller-volume container (55-gallon drums for example).

Contaminant Release Sites

Potential sites for release of hazardous materials within the study area include transportation corridors and facility sites. It should be noted that all release probabilities are based upon existing traffic volumes and accident statistics provided by the City of Seattle; future conditions such as increased traffic volumes or roadway improvements (or deterioration in conditions) are not included in this analysis.

Transportation Corridors

The transport of hazardous materials through the Seattle industrial area poses a risk of release of hazardous materials resulting from vehicular accidents. Roadway spills due to accidents comprised approximately 20% of the total spills reported to the Washington Department of Ecology (Ecology) during 1992-1993, with the remaining 80% reported at facilities such as

loading docks and storage yards. It should be noted that the statistics cited are for reported spills only, which could skew the results. Because of the nature of transportation corridor spills, it is likely that many incidents are not reported--for some, it may be easier to simply drive away from the spill site than to remain and risk responsibility for containment and/or clean-up. Therefore, many transportation-related spills may not be reported, and the figure cited by Ecology may underestimate the percentage of roadway spills.

Our analysis determined that the highest risk of hazardous material releases in the public right-of-way occurs along roadways which are both designated truck routes and high accident intersections. There are several roadway sections in the Seattle industrial corridor that are subject to higher-than-average accident rates, as identified by the Seattle Engineering Department. (It should be noted that the city summarizes accident rates and traffic counts at intersections; therefore, all references cited are for intersections). Three of the ten identified "high accident rate" intersections within the study area are located along roadways designated as truck routes by the City of Seattle. These roadway sections present the highest level of risk of hazardous material releases along transportation routes within the study area. The estimated probability that a hazardous material release related to a transportation accident will occur is approximately once every three to five years at high accident intersections which are also designated truck routes. Within the study area, these intersections include First Avenue South and Royal Brougham Way, First Avenue South and South Spokane Street, and Fourth Avenue South and South Spokane Street.

The City of Seattle Engineering Department-Transportation Division has identified ten high accident intersections (more than five accidents per year for non-signalized arterials, more than ten accidents per year for signalized arterials) within the study area (See High Accident Location Map). Three of these high accident intersections occur along designated truck routes. Based on the accident rates for these intersections (provided by the City of Seattle Engineering Department) the probability that an accident will occur which will involve the release of hazardous materials at a high accident intersection along a designated truck route is approximately once every three to five years. The probability of a hazardous-material release at specific intersections within the study area is summarized in Table 2. Georgia Taylor of the Seattle Fire Department Public Information Office confirmed that this level of spill probability along truck routes in the study area appears to be reasonable. She stated that the Seattle Fire Department had responded to a gasoline spill at the intersection of 1st Ave. South and Spokane Street (a location with a three-year spill probablility) within the last three years. For high accident rate intersections not located along truck routes, the range of probability for a hazardous material release is once every 10 to 40 years, depending on traffic volume and accident rate. For this study it was assumed that all trucks (100%) carry hazardous materials due to the fact that all trucks have fuel tanks which can rupture in the event of an accident (Golder Associates, 1993). Review of spill data in Washington and Oregon indicate that many truck-related spills are associated with fuel tank rupture. Along designated truck routes it was assumed that 30% of the average daily traffic (ADT) is made up of trucks and that trucks comprise approximately 10% of the ADT on arterials which are not designated truck routes (Seattle Engineering Department Traffic Counts and, Bruno, personal communication). The assumption was also made that 5% of all truck accidents involve the release

Table 2. Probability of Spill Occurrence at High Accident Intersections

INTERSECTION	1992-Total Accidents	Average Daily Traffic (ADT, in hundreds)	Accident Rate[2]	Probability of Haz Mat Spill Occurrence[3]	Probability of Haz Mat Spill Occurrence[4] at High Accident Intersections
1st Ave. S. and Madison	10	241	1.14	1/20 yrs	
1st Ave. S. and Royal Brougham *	16	344	1.27	1/13 yrs	1/4 yrs
1st Ave. S. and Spokane Street *	20	168	3.26	1/10 yrs	1/3 yrs
4th Ave. and Spokane Street *	13	205	1.74	1/15 yrs	1/5 yrs
Fifth Avenue and Union Street	15	364	1.13	1/13 yrs	
Seventh Avenue and Virginia St.	17	104	4.47	1/12 yrs	
Broad Street and Denny Way	12	291	1.13	1/17 yrs	
Sixth Avenue and James Street	10	317	0.86	1/20 yrs	
Elliott Avenue and Vine Street	7	105[1]	1.83	1/29 yrs	
Sixth Avenue and Yesler Way	5	105[1]	1.30	1/40 yrs	

1 • Calculations based on the assumption that ADT for non-signalized arterial is 10,500.

2 • Accident rates at intersections only = accidents per million vehicles entering. Source: Seattle Engineering Department of Transportation Division. 1992 High Accident Intersections.

3 • 10% truck traffic - US DOT - *Summary of Medium and Heavy Truck Crashes in 1990.*
• 100% haz mat truck traffic - Seattle Engineering Department, Richard Bruno, (personal communication, January 1994); Washington State Police, Officer Nickolas, Personal Communication, January 1994.
• 5% truck accidents result in spill - US DOT - *Summary of Medium and Heavy Truck Crashes in 1990.*; Gail Griffin, Washington Utilities and Transportation Commission, (personal communication, January 28, 1994).
• Figures include fuel spills.

4 • 30% truck traffic - based on Seattle Engineering Department Truck Classification counts increased percentage along designated truck routes.
• 100% haz mat truck traffic -Golder Assoc. 1993. City of Portland, Oregon. Drainage Sump Study. Prepared for the City of Portland, Bureau of Environmental Services. Pages 64-65. (assumed that all trucks were transporting hazardous material, including fuel tanks).
• 5% truck accidents result in spill - see sources above.
• Figures include fuel spills.

* Designated truck routes

Example Calculation:

First Avenue S. and Madison

(Total annual traffic/1,000,000 vehicle miles) x accident rate x % trucks x % haz mat trucks x % accidents resulting in spills.

(24,100 ADT x 365 days/yr/1,000,000 vehicle miles) x 1.14 (acc. rate) x 0.10 (% trucks) x 1.00 (% haz mat) x 0.05 (% spills) = 0.05014 = 1 spill/20 yrs

of hazardous materials (U S Department of Transportation, 1990; Gail Griffin, Washington Utilities and Transportation Commission, 1994).

Major intersections within the study area which are not characterized by the City as "high-accident intersections" do not receive site-specific accident analysis. Therefore, a standard, city-wide accident rate was used for these intersections. The probability of a hazardous material spill at these intersections is once every 56 years. Major intersections along designated truck routes not characterized as "high-accident" have an estimated probability of a hazardous material spill of once every 19 years. These conclusions are based on the following: 1) accident rate calculations were made using a figure of 3.6 accidents per million vehicles entering an intersection, an average number of accidents for signalized arterials, according to the Seattle Engineering Department; 2) 10% of traffic is assumed to be truck traffic (30% along designated truck routes); 3) 100% of trucks carry hazardous materials (includes fuel tanks and oil); 4) 5% of truck accidents result in release or spills of hazardous material. The calculations used to derive the spill probabilities are shown on Table 2.

Accidental releases can be of any of the three categories of contaminants, depending on the material being transported. However, spill reports made to Ecology show that 91% of traffic-related spills were floaters (largely petroleum derivatives). 83% of these reported floater spills had volumes less than 50 gallons; 100% of the reported mixer spills were less than 50 gallons.

On-Site

On-site releases of hazardous materials comprised approximately 80% of the spills reported to Ecology (1992-1993). For all spills reported during 1992-1993, 78% were Floaters, 17 % were Mixers, and 5% were Sinkers. For all three categories of contaminants, 70%-75% were less than 50 gallons (see Table 1). This finding is consistent with statistics compiled in Oregon which indicate that most spills occur at loading docks, in parking lots, and at storage facilities.

Key Findings

Based upon the review of approximately 300 spill reports compiled by Ecology for the Seattle metropolitan area in 1992 and 1993, 78% of spilled hazardous materials were floaters, 17% were mixers, and 5% were sinkers. Within the public transportation corridor, 91% of all reported spills involved floaters and 9% involved mixers. In addition, spilled volumes were generally less than 100 gallons (81% of all floater spills were less than 100 gallons and 100% of all mixer spills were less than 50 gallons).

Roadway spills comprised approximately 20% of the total reported spills to Ecology (1992-1993). For roadway traffic spills, 91% were floaters and 9% were mixers (there were no sinker spills reported). Eighty-three percent of reported roadway spills were less than 50 gallons.

There is a significantly increased percentage of truck traffic along designated truck routes, which increases the probability of a hazardous material release along these routes. The average

probability (averaged over all streets in Seattle) increases from one event in 56 years on a non-truck route to one event in 19 years for designated truck routes. The designated truck routes in the Seattle industrial area are Airport Way S., Alaskan Way S., S. Spokane Street, and Royal Brougham Way. The probability for a spill is dramatically increased if the roadway includes a high accident intersection.

Three out of the ten high accident intersections identified in the study area are located on designated truck routes as shown on the attached figure. At these intersections, the probability of a traffic accident related spill of hazardous material is expected to occur every three to five years (probability of occurrence of 20 to 30 percent every year). This probability drops to the range of once in 10 to once in 40 years at high accident intersections not on designated truck routes.

Implications for Mitigation

The highest priority for mitigation or spill prevention/containment facilities within public rights-of-way are those roadway sections which are designated truck routes and which have historically high accident rates. In those areas, mitigation should be considered to minimize the risk of hazardous release of contaminants to receiving water bodies. Mitigation measures could include steps to reduce accident rates along truck routes, such as improved visibility, widened lanes, signage, or other measures. Consideration might also be given to creating alternate truck routes, although such a measure would be difficult to implement.

In high risk areas, it may be advisable to implement spill containment facilities/diversion structures which could contain or divert at least 100 gallons of spilled materials. Based upon historical information, it appears that this volume of containment would be adequate for approximately 90% of all spills. Any containment facility design should address the high probability that the spilled material will float on water.

Any mitigation measure developed should include a detailed maintenance schedule. Maintenance has been shown to be a critical factor in facility performance.

References

[1] Brown and Caldwell, 1986. *Airport Way Water Quality Study*, Technical Report to the City of Portland. October 10, 1986.

[2] Bruno, Richard. Seattle Engineering Department. Percentages of Truck Traffic. (personal communication, January 1994).

[3] City of Seattle Engineering Department. Automatic Traffic Counts: 1990, 1991, 1992, 1993. Seattle, Washington.

[4] City of Seattle Engineering Department. City Wide Accident Rates. 1990-1992.

[5] City of Seattle Engineering Department. Office for Planning. July 1994. Seattle Comprehensive Transportation Program. Street Classification Map (Truck Route).

[6] City of Seattle Engineering Department. 1992 Traffic Flow Map. Seattle, Washington.

[7] City of Seattle Engineering Department. Transportation Division. 1992 High Accident Intersections.

[8] Golder Associates. June 1993. *City of Portland, Oregon Drainage Sump Study*. Prepared for the City of Portland Bureau of Environmental Services. Pages 64-65.

[9] Seattle Fire Department. Public Information Section. January 31, 1994. (personal communications between Georgia Taylor and Maureen Lewison Gurol).

[10] Washington State Department of Ecology. Tracking Report of Spills in Seattle. 1992, 1993.

[11] Washington State Police. Officer Nickolas, (personal communications. January 1994).

APPENDIX K

Metro 5-Year Update

Separation Alternative
Ballard Regulator and
No. 1 Weir
Basin No. 3

Metro CSO
5-Year Update

Separation Alternative

Ballard Regulator and No. 1 Weir
Basin No. 3 (16th Avenue NW / 25th Avenue NW)

Prepared by

Herrera Environmental Consultants

December 1997

CONTENTS

Executive Summary v

Introduction 1

Stormwater Drainage System 3

- Design Criteria Used in Sizing Storm Sewer System Components 3
- Methodology Used to Calculate Runoff Characteristics 3
- Methodology Used for Sizing Storm Drain Pipes 4
- Description of the Storm Drainage System Layout 5
- Estimated Sizes and Quantities of Storm Drainage System Components 6

Pollutant Loading Analysis 7

- CSO and Stormwater Quality 7
- CSO and Stormwater Quantity Estimates 7
- Evaluation of Possible Stormwater Treatment Technologies 8
  - Compost Filters 10
  - Vortex Separators/Swirl Concentrators 13
  - Loading Comparisons 14
  - Spill Potential 16

TABLES

Table 1. Land Use in Ballard Basin 3 1
Table 2. Locations of Major Storm Drains in Ballard Basin 3 5
Table 3. Estimated Linear Feet of Storm Drain Needed for CSO Separation in Ballard Basin 3 6
Table 4. Available data on stormwater and CSO quality in the Seattle area. 9
Table 5. Annual stormwater volume estimates for Ballard basin 3 after separation. 9
Table 6. Pollutant loadings to Ship Canal before and after separation of Ballard basin 3. 15

FIGURES

Figure 1. Ballard Basin No. 3 location map. vi

EXECUTIVE SUMMARY

The cost of the separation of combined sewers in the Ballard Basin No. 3 was evaluated to facilitate comparison of this method of storm water management to the other forms of CSO control being considered in this area. The evaluation of separation also includes an estimate of the contaminant loading generated by separating storm flows and a discussion of the use of best management practices for the partial reduction of constituent levels.

As shown in Figure 1, Ballard Basin No. 3 consists of a 351-acre residential area north of Northwest 65th Street and south of Northwest 85th Street, between 16th Avenue Northwest and 25th Ave. Northwest. The separated storm drain system would connect to two existing storm drains south of Northwest 65th St. on 20th Ave. NW and on 26th Ave. NW, which discharge directly into Salmon Bay.

The storm water drainage system was designed using City of Seattle criteria for the calculation of design storm flows and for the minimum acceptable slopes and sizing of storm drain piping. The computer modeling program Waterworks, which incorporates the SBUH method of developing hydrographs, was used to size the network of piping in each subbasin. The resulting system of storm drains consists of a total of 14.0 miles of pipe, with diameters ranging from 12 inches to 54 inches.

Changes in the magnitude of pollutant loading to receiving waters as a result of separation were estimated from previously documented CSO and urban storm water runoff quality data, available information on existing CSO volumes, and storm water runoff calculations. Calculated loading estimates indicate that separation and discharge of untreated storm water could result in increased loading of cadmium, lead, zinc, and PAHs, and decreases in the loading of chromium and phthalates entering Salmon Bay. It is estimated that loading of copper and total suspended solids into the bay would not vary significantly from existing conditions following separation of storm water.

Two types of technologies for storm water pretreatment were evaluated; compost filters and vortex separators/swirl concentrators. These systems are reported to accomplish contaminant removals for most metals of concern, solids, and total petroleum hydrocarbons, in excess of 60 percent. Compost filters have the advantage of removing finer-grained material and operating independently of the existing sewer system Based on the recommended surface area loading for compost filters and assuming that the filters would be placed in a vaults sized to fit within most street right-of-ways, between 23 and 66 filters would be required within the basin, depending on whether a King County or a Department of Ecology design storm is used for sizing pretreatment facilities.

The contaminant removals reportedly achieved by compost filters were applied to the calculated storm water loading to estimate the extent of their effectiveness in alleviating increased loading resulting from separation. With treatment, the levels of most metals (chromium, copper, lead, zinc), phthalates, and total suspended solids, are estimated to decrease below the levels resulting from uncontrolled CSO discharge; however, the loading of cadmium and PAHs would rise.

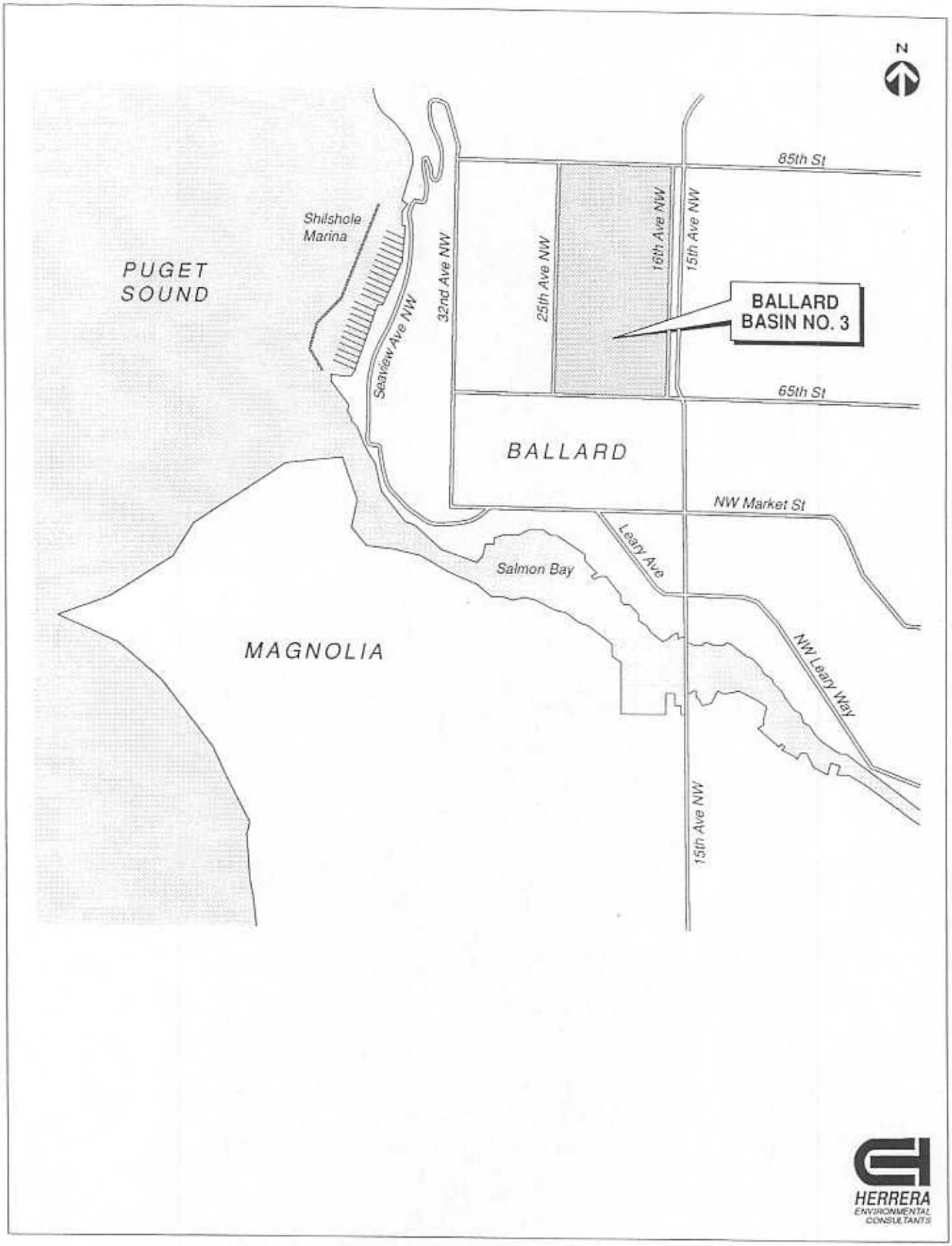

Figure 1. **Ballard Basin No. 3 location map.**

The loadings of contaminants to Salmon Bay which would result from separation in Ballard Basin No. 3 were also compared to the change in loadings predicted to result from planed modifications to the Metro system including the enlargement of the Fort Lawton tunnel and improvements to the West Point treatment plant. These system modifications will result in a significant decrease in CSO flows and, subsequently, loadings. Comparatively, the loadings resulting from the separation management option will represent an increase over the loadings resulting from system improvements for all constituents except phthalates.

INTRODUCTION

The purpose of this memo is to analyze the requirements for the separation of combined sewers in the area known as Basin 3, which is tributary to the Ballard Regulator. The analysis consists of two parts. The first part involves estimating the layout and size of a piped network of storm drains capable of conveying the city of Seattle 25-year design storm. The second part consists of an evaluation of potential increases in pollutant loading associated with the discharge of storm water to Salmon Bay and the viability of implementing best management practices for mitigating that loading. This information will be used both as a basis for estimating the cost of a separation project in this subbasin and as a means of estimating the cost of separating combined sewers in other areas of the city.

The drainage area of Ballard basin 3 covers all of the land between 16th Avenue NW and 25th Avenue NW, from NW 65th Street to NW 85th Street. Figure 1 shows that basin boundaries. The basin contains land zoned by the city of Seattle as single-family residential, multifamily residential, and neighborhood commercial. Most of the basin is residential land use. The small commercial districts in the basin are located on NW 65th Street, 24th Avenue NW, and NW 85th Street. A summary of land use in the basin is shown in Table 1.

Table 1. Land Use in Ballard Basin 3

Land Use Designation	Acres
Single-Family Residential	328
Multifamily Residential	16
Neighborhood Commercial	7
TOTAL	351

STORMWATER DRAINAGE SYSTEM

This section describes the criteria and methods used to develop planning level estimates of new storm sewer system components that would be needed for separation of combined sewer flows in the Basin 3 drainage area contributing to the Ballard Regulator. Estimates of the quantities of storm drain components that would be needed in the basin for separation of storm runoff flows are provided.

DESIGN CRITERIA USED IN SIZING STORM SEWER SYSTEM COMPONENTS

The city of Seattle's *Design Guidelines for Public Storm Drain Facilities* (revised October, 1990) were used as the basis for developing estimates of the sizes and quantities of new storm sewer system components. For some parameters, these guidelines have not been updated to reflect the Seattle Engineering Department's current, revised criteria. The Seattle Engineering Department (Pfaender, 1994 personal communication) provided additional input on required design criteria. The specific criteria used in the storm sewer separation analyses are as follows:

- Storm sewers must be sized to convey runoff from the 25-year, 24-hour storm (Pfaender, 1994 personal communication). The hyetograph for this storm is provided by the Seattle Engineering Department. The total 24-hour precipitation for this event is 3.125 inches.
- Storm drains must be a minimum of 12 inches in diameter.
- Storm drain pipe slopes must be at least 0.5 percent, with 1.0 percent being preferable. Pipe slope must achieve a minimum velocity of 3.0 feet per second.
- Concrete pipe is the standard material for storm drains (has a Manning's "n" value of 0.013).
- Storm drains must have a minimum cover of 6 feet above the top of pipe.

METHODOLOGY USED TO CALCULATE RUNOFF CHARACTERISTICS

The Seattle Engineering Department further advised that, for a study such as this, there is no prescribed methodology for calculating storm runoff (aside from using the specified 25-year rainfall hyetograph). Therefore, the Santa Barbara Urban Hydrograph (SBUH) method was used to calculate runoff rates and volumes (via the commercially available WaterWorks modeling program). This method calculates runoff using "curve numbers" that represent homogeneous types of land cover.

A single curve number (CN) is input to the SBUH model for all pervious surfaces within a particular drainage subbasin; a separate CN is input for all impervious surfaces within a drainage subbasin. The curve numbers are used to estimate the volumes of runoff originating from pervious and impervious surfaces, and the associated rates of runoff contributing to a particular analysis location (i.e., to individual storm drain pipes throughout the subbasin). For the purposes of this study, a pervious runoff CN of 86 was used (representing grass cover on soils of hydrologic group "C"). An impervious runoff

CN of 98 was input to the SBUH model to represent all pavement, rooftops, sidewalks, and other impervious surfaces. A tabulation provided by the Washington State Department of Ecology (Ecology) in their *Stormwater Management Manual for the Puget Sound Basin* (1992) was referenced for these specific CN values.

To determine the amount of area within each drainage subbasin that is impervious or pervious, zoning information was utilized. The Ballard subbasin has three types of zoned areas (Seattle 1990). Single-family residential, multifamily residential (low rise), and neighborhood commercial. Areas of the subbasin that are zoned by the city of Seattle as "single-family residential" land use were evaluated to estimate the number of homes ("dwelling units") per acre. The percent pervious/impervious cover for these residential areas was then derived using data provided in Ecology's stormwater manual that relate the number of dwelling units per acre to the percent impervious land cover. The impervious surface coverage of single-family residential areas was estimated to be 54 percent, which corresponds to 6.5 dwelling units per acre according to Ecology's stormwater manual. Areas of the subbasin zoned as "multifamily residential" were assumed to have 75 percent impervious surface coverage. Areas of the subbasin zoned as "neighborhood commercial" were assumed to have 85 percent impervious surface coverage.

In addition to curve numbers associated with pervious and impervious surfaces, the SBUH model inputs include the following: time of concentration, which reflects the travel time of runoff flow to the location being analyzed; rainfall hyetograph; and a portion of rainfall that is intercepted by trees or buildings or that is stored in surface depressions, which does not contribute to surface runoff (assumed to be 0.2 inches).

All of the above information was incorporated into the SBUH model to estimate the characteristics of runoff contributing to various storm drain pipe locations throughout Ballard Basin 3. The calculated runoff rates were then used to determine the required pipe sizes for conveying the 25-year peak runoff flows.

METHODOLOGY USED FOR SIZING STORM DRAIN PIPES

The WaterWorks computer modeling package also calculates pipe diameters based on runoff flow rates. The model has inputs for pipe diameter, pipe slope, pipe roughness (Manning's "n"), and the associated contributing drainage basin hydrograph. Pipe slopes were input based on ground surface topography as shown on maps obtained from the city of Seattle. Throughout Basin 3 there is sufficient ground slope such that drainage pipes can parallel the ground surface while satisfying the slope criteria set forth by the Seattle Engineering Department. Thus, the pipe slopes were assumed to be equivalent to the ground slope in the location where they would be placed.

The pipe network layout for the new storm drainage system was developed based on alignments of existing combined sewer pipes as shown on city of Seattle utility drawings. These combined sewers are aligned north-south on all of the streets between 16th Avenue NW and 25th Avenue NW. It was assumed that new storm drainage pipes would not be needed on side streets (east-west alignments) or in alleys to convey surface runoff into the main trunk lines. Thus, the pipe networks resemble the existing combined sewer system.

With the information on pipe slopes, lengths, and roughness input to the subbasin runoff model, the corresponding calculated runoff hydrographs were routed through the pipes and the WaterWorks program calculated the diameters needed to convey the 25-year peak flows. If the program calculated a diameter of less than 12 inches, 12 inches was assumed as the size of the pipe. In some instances the WaterWorks program calculated a pipe diameter not conventionally used by the city of Seattle, such as 33 inches. In these cases, the next larger conventional pipe size (i.e., 36 inches) was assumed as the pipe size.

DESCRIPTION OF THE STORM DRAINAGE SYSTEM LAYOUT

Ballard Basin 3 slopes generally to the south, with low areas in the vicinity of the intersection of 20th Avenue NW and NW 65th Street and at the southwest corner of the basin at 25th Avenue NW and NW 65th Street. Because there are two locations in the basin where runoff will tend to go, the basin would need two "outfalls" (i.e., large pipes to the south which eventually carry stormwater to Salmon Bay).

Because of the topography of the basin, most of the main storm sewer trunk lines would run from north to south. Table 2 shows the streets beneath which the major storm drains would be placed, along with the corresponding diameters of drain pipe. Along most streets, pipe diameters start at 12 inches (the minimum size allowed by the city of Seattle) at the north end of the basin (85th Street) and increase toward the southern end of the basin (65th Street) to the diameter indicated in Table 2.

Table 2. Locations of Major Storm Drains in Ballard Basin 3

Street Name and Location	Pipe Diameter(s)
16th Avenue NW south of 85th	increase to 21" approaching 65th Street NW
17th Avenue NW south of 85th	increase to 24" approaching 65th Street NW
18th Avenue NW south of 85th	increase 21" approaching 65th Street NW
19th Avenue NW south of 85th	increase to 21" approaching 65th Street NW
20th Avenue NW south of 85th	increase to 21" approaching 65th Street NW
21st Avenue NW south of 85th	increase to 24" approaching 65th Street NW
22nd Avenue NW south of 85th	increase to 21" approaching 65th Street NW
23rd Avenue NW south of 85th	increase to 21" approaching 65th Street NW
Jones Avenue NW south of 85th	increase to 21" approaching 65th Street NW
24th Avenue NW south of 85th	increase to 21" approaching 65th Street NW
25th Avenue NW south of 85th	increase to 18" approaching NW 65th Street
NW 65th Street west of 22nd Avenue NW	increase to 42" approaching 26th Avenue NW
NW 65th Street east of 23rd Avenue NW	increase to 42" approaching 20th Avenue NW
NW 65th Street west of 15th Avenue NW	increase to 54" approaching 20th Avenue NW
Outfall to south along 26th Avenue NW	42" from NW 65th Street southward
Outfall to south along 20th Avenue NW	54" from NW 65th Street southward

ESTIMATED SIZES AND QUANTITIES OF STORM DRAINAGE SYSTEM COMPONENTS

Table 3 shows the estimated lengths of various pipe sizes that would be needed to separate storm runoff from the combined sewer system in Ballard Basin 3. Appurtenant structures, such as curb inlets, manholes, catch basins, and piping connections from curb inlets or catch basins to primary storm drains running down the middle of streets were not included in the evaluation. The cost estimate for the storm drain system considers the need for these appurtenant structures.

Table 3. Estimated Linear Feet of Storm Drain Needed for CSO Separation in Ballard Basin 3

Pipe Diameter (inches)	Total Length (feet)
12	14,000
15	9,360
18	12,030
21	21,940
24	1,520
27	0
30	0
36	530
42	1,160
48	250
54	270

POLLUTANT LOADING ANALYSIS

The purpose of the pollutant loading analysis was to determine the effect that separation of the combined sewer system in the Ballard basin would have on stormwater and sanitary sewer loadings to the ship canal. The analysis focuses on the changes in pollutant loading that might be expected after separation due to the reduction in combined sewer overflows and corresponding increase in stormwater discharges. The need for stormwater treatment to reduce pollutant loadings after separation and various options for providing treatment in an urban setting like Seattle have also been assessed. No attempt has been made to predict changes in receiving water quality.

CSO AND STORMWATER QUALITY

There is little site specific information on the quality of combined sewer overflows (CSO) or stormwater runoff in the study area. Annual pollutant loading estimates have been calculated using available data on CSO and stormwater quality from other local studies and on estimates of sewer overflow and stormwater discharge volumes before and after separation.

Data on the quality of combined sewer overflows was collected by Metro (1984) as part of the Toxicant Pretreatment Planning Study (TPPS). Flow-proportioned composite samples were collected from four CSOs (Michigan, Lander, Denny Way, and Hanford) during four overflow events that occurred between January and April, 1982. The average concentrations for the most frequently detected pollutants found in these four CSOs are summarized in Table 4.

Stormwater data used in this analysis were derived from studies conducted by the City of Seattle and Metro on storm drains that discharge into Lake Union and the Ship Canal (Merrill, 1989 personal communication). The monitoring efforts were conducted between 1986 and 1988 to characterize the quality of stormwater from different land uses. As part of these studies, the data were compared with historical data collected by Metro in the late 1970s and early 1980s. The comparisons showed that there has been a significant decrease in the concentration of lead in stormwater from all land uses, presumably due to decreases in the use of leaded gasoline and possibly the shutdown of a local lead smelter which operated on Harbor Island. Results from the 1986-1988 stormwater sampling efforts are summarized in Table 4.

CSO AND STORMWATER QUANTITY ESTIMATES

Estimates of annual overflow volumes from the Ballard CSO have been obtained from various planning documents and are based on current estimates from recent modeling efforts (Merrill, 1994 personal communication).

Conditions for the period 1981 through 1983 are commonly used to evaluate the various CSO control alternatives. This base period reflects conditions prior to implementation of CSO controls. In addition, besides the separation alternative, other proposed

improvements such as the enlargement of the Fort Lawton tunnel and modifications at the West Point plant will affect overflows at the Ballard CSO. Separation in combination with these other improvements will achieve the CSO reductions necessary to comply with state requirements. Estimated CSO volumes for each condition are summarized below:

	CSO Volume (Million gallons per year)
1981-1983 baseline	90
Other system improvements	17 to 21
Separation	0

The annual volume of stormwater discharged after separation has been calculated based on rainfall-runoff relationships for the storm drain basin using the SCS curve number method as described in the King County Surface Water Design Manual (1990). This method calculates the total volume of runoff for individual storms based on land use characteristics in the contributing drainage basin. Runoff curve numbers (CN) are used to predict stormwater runoff based on land use, soil type, vegetative cover, and storage/interception. Separate CNs are applied to pervious and impervious surfaces. For this analysis, a CN of 86 was used for pervious surfaces and 98 was used for impervious surfaces. The basin has been divided into the following land use categories: single-family residential, multifamily residential, and commercial. The amount of impervious surface for each land use category used in the calculations is shown below:

Land Use	**Percent Impervious**
Single-family residential	54
Multifamily residential	75
Commercial	85

The CN method is a single event-type model. To estimate the total annual volume of runoff, separate calculations were performed for several different size storm events. The resulting runoff volumes for the individual storms were then multiplied by the number of storms in each size class that would be expected during an average year and then summed to estimate total annual runoff volumes from each subbasin. Rainfall statistics reported by R.W. Beck (1993) were used to characterize average rainfall patterns in Seattle. Annual stormwater volume estimates were then reduced by 20 percent in residential areas to account for rooftop surfaces that would continue to discharge to the sanitary sewer after separation. The results of the runoff calculations are summarized in Table 5.

EVALUATION OF POSSIBLE STORMWATER TREATMENT TECHNOLOGIES

Stormwater runoff contains a variety of pollutants, including total suspended solids, metals, nutrients, and organic contaminants. Therefore, sewer separation projects must be evaluated to determine how increases in the frequency and volume of stormwater discharges and its associated pollutants after separation, will effect overall loadings to the receiving water environment. It is possible that in the case of some contaminants, the

Table 4. Available data on stormwater and CSO quality in the Seattle area.

	Cadmium (ug/L)	Chromium (ug/L)	Copper (ug/L)	Lead (ug/L)	Zinc (ug/L)	PAH (a) (ug/L)	Total Phthalate (ug/L)	Total Suspended Solids (mg/L)
Stormwater (b)								
Commercial	0.4	3.1	27	57	149	4.6	1.6 f	46
Highway	0.5	5.4	21	60	167	1.1	0.9 f	50
Industrial	1.3	11.7	75	73	290	1.3	0.8 f	59
High density residential	1.7	11.5	53	83	288	3.4	6.7 f	101
Low/medium density residential	1.4	3.4	13	24	88	2.1	0.7 f	27
Average CSO (e)	3.4	40.5	62	57 c	227	3	54.2 d	119

a) Polycyclic aromatic hydrocarbons.
b) Merrill 1989 personal communication.
c) Data from 1986-1988 show that lead concentrations in stormwater have declined in recent years. Therefore, the more recent data for lead in stormwater have been used to characterize CSO discharges.
d) Sum of di-n-phthalate, butylbenzyl phthalate, and di-octyl phthalate.
e) Geometric mean for data from Hanford, Lander, Michigan, and Denny Way CSOs (Metro 1984).
f) Sum of bis(2-ethylhexyl)phthalate, butylbenzyl phthalate, di-n-octyl phthalate, and diethyl phthalate.

Table 5. Annual stormwater volume estimates for Ballard basin 3. after separation.

	Area (acres)	Volume (AF/yr)
Commercial	7	14
Highway	0	0
Industrial	0	0
High density residential	16	22
Low/medium density residential	328	319
Total	351	354

reduction in CSO loadings may be entirely offset by the increased loading from stormwater, with no net benefit to the receiving water environment.

Under the antidegradation policy established in the Washington state water quality standards (WAC 173-201A-070), nonpoint sources responsible for pollution of state waters must be provided with all known, available, and reasonable best management practices. Best management practices for stormwater are described in Ecology's 1992 *Stormwater Management Manual for the Puget Sound Basin*. Although a large part of manual is devoted to describing practices designed to reduce the amount of pollution generated by nonpoint sources, it is recognized that structural controls (i.e., treatment) may also be needed to control nonpoint pollution. The manual provides design criteria for a number of technologies that can be used to treat stormwater runoff.

Stormwater treatment has been evaluated as a way to reduce the pollutant loadings from sewer separation projects in the Ballard basin. Because of the highly urbanized nature of this basin and the limited space available for construction of stormwater treatment facilities, it will not likely be economically feasible to construct many of the standard treatment technologies recommended in the Ecology manual, particularly those that require large amounts of land (e.g., wetponds, biofilters). Therefore, this analysis focuses on technologies that could be reasonably constructed in an urban setting. In particular, smaller-scale treatment technologies that could be installed on the storm drain collectors to treat runoff from individual catchment areas are considered. Two technologies, compost filters and vortex separators have been considered, because both could be installed in underground vaults which would minimize interference with land surface activities. These systems will need to be installed beneath road rights-of-way to permit access by the city for construction and maintenance purposes. The main limitation would be possible interference with other underground utilities. Site-specific conditions will need to be evaluated when selecting locations for installation of underground treatment facilities.

Compost Filters

Leaf/vegetative compost filters are a relatively new, experimental technology for treating stormwater that has been developed and patented by W & H Pacific (1993). These systems treat stormwater by routing it through a filter containing composted leaf/vegetation waste. Pollutants present in the stormwater adsorb onto the compost media and are retained in the filter. The medium is periodically replaced to maintain treatment effectiveness. Because these systems are relatively new, long term maintenance requirements have not been well established. However, annual replacement of the compost material is recommended (W & H Pacific, 1993).

Performance. Pollutants are removed by filtration, cation exchange, adsorption, and biodegradation. Compost systems are capable of filtering out many of the particulates and particulate-bound pollutants present in urban runoff. Performance tests on a prototype facility constructed in Portland, Oregon have shown favorable results for the removal of metals and petroleum hydrocarbons (W & H Pacific, 1993). The prototype

facility consists of a 100- by 16-foot swale lined with composted leaf/vegetation in which several baffles have been constructed to retain stormwater and permit infiltration through the compost media. The facility receives runoff from a 27-acre basin and is designed for a peak hydraulic loading of 6.7 cfs. Removal efficiencies from the second year of operation (inlet/outlet samples collected during six storms monitored between September 1992 and March 1993) are summarized below (W & H Pacific, 1993):

Pollutant	**Percent Removal**
Total suspended solids	85
Cadmium	6
Chromium	71
Copper	59
Lead	86
Zinc	77
Total petroleum hydrocarbons	90

No information is available on the removal of phthalate esters which are commonly found in sewer overflows and to a lesser extent, in urban runoff. Phthalates have been demonstrated to cause birth defects and to affect fertility, when injected into laboratory animals. Given the relatively low organic carbon adsorption coefficient (K_{oc}) reported for phthalates (2.65 for diethyl phthalate) (Public Health Service, 1993), it does not appear that adsorption on the compost media would occur to a great extent. Therefore, for this analysis, it has been conservatively assumed that zero removal of phthalates would occur in the compost filter.

Drop-in vault units are expected to achieve similar removal rates. Drop-in units are smaller to permit installation within an underground vault. Several different sizes are currently available. The largest unit recommended for vault installation is about 8 feet by 14 feet, which has a hydraulic capacity of about 0.5 cfs.

Requirements for Ballard basin. The number of compost filters that would be required to treat runoff from the Ballard basin has been evaluated based on land use characteristics in the individual subbasins and the hydraulic capacity of the filter units. For planning purposes, it has been assumed that compost filters would be installed at multiple locations in the basin with each installation comprised of two 8- by 14-foot units installed in series (approximate capacity = 1 cfs). The total cost per installation would be about $24,000 (includes materials and installation costs). It should be noted that a vertical drop of approximately 2.2 feet must be provided between the inlet and outlet of the filter to enable effective infiltration through the media. Therefore, a more detailed analysis of each system will be needed to determine whether the storm drain system can support multiple installations without adversely affecting system hydraulics.

Treatment effectiveness and filter requirements have been evaluated for the following two design storms:

Ecology water quality storm:	6-month, 24-hour (1.35 inches)
King County storm:	one-third of the 2-year, 24-hour (0.65 inches)

The Ecology design storm accounts for approximately 90 percent of the total rainfall that would be expected to occur during an average year (i.e., only 10 percent of the total annual rainfall is contributed by storms greater than the 6-month, 24-hour event) (Ecology, 1992). Assuming that the amount of runoff would be proportional to the rainfall, it can be estimated that a treatment system designed to handle the runoff from the Ecology storm would be capable of treating about 90 percent of the runoff that occurs in a typical year, with only about 10 percent bypassed around the treatment facility. The smaller King County water quality design storm accounts for about 60 percent of the total annual rainfall. Therefore, it is assumed that a system designed to accommodate the King County storm would treat about 60 percent of the runoff generated in the basin each year, bypassing the remaining 40 percent of runoff generated during events larger than the design storm.

Peak runoff rates for single (54 percent impervious) and multifamily residential (75 percent impervious) development and commercial/industrial (90 percent impervious) development were estimated using the Waterworks rainfall-runoff model which is based on the Santa Barbara Urban Hydrograph method. The same CNs described in the section on stormwater quantity estimates (i.e., 86 for pervious and 98 for impervious) were used to determine the requirements for compost filters. The results indicate that to be able to treat runoff from storms less than or equal to the Ecology design storm, one compost filter would be required for approximately every 5.5 acres of single-family residential in the basin and for every 4 acres of multifamily and commercial/industrial in the basin. Using the King County design storm, the size of the catchment area can be increased to about 16 acres for single-family residential, 12 acres for multifamily residential, and about 10 acres for commercial/industrial land use.

Based on the land use characteristics in the Ballard basin, if compost filters were installed to treat all the runoff from those areas to be separated, the following numbers of filters would be required:

Design Storm	
Ecology	**King County**
66	23

Based on these results, it does not appear that it will be practical to treat all runoff from the separated areas in compost filters. Although using the smaller King County storm for design purposes results in fewer filters than the Ecology storm, the total number of filters (23) still represents a large capital investment ($600,000 not including costs for utility relocation) as well as the annual costs for operation and maintenance of these systems.

Vortex Separators/Swirl Concentrators

Vortex separators/swirl concentrators have been used for primary settling in municipal wastewater treatment plants and to treat combined sewer overflows. These devices remove coarse-grained sediment and floatables as well as regulate flow. Although there are several types, all separators function by directing flow around the perimeter of a cylindrical shell to create a swirling, vortex pattern. The swirling action throttles the incoming flow and concentrates the solids at the bottom of the unit. In CSO and stormwater applications the underflow, which contains a higher concentration of solids, would then be routed back to a nearby sanitary sewer, and the clarified overflow would be discharged to receiving waters. Between 3 and 10 percent of the total flow is generally returned to the sanitary sewer via the underflow system (EPA, 1993).

Performance. Concentrators are typically designed to remove 90 percent of the grit-sized particles (EPA, 1993). Grit-sized particles with diameter of 0.2 mm have a settling velocity of about 2.5 cm/sec. A 12-foot diameter prototype concentrator tested installed on a combined sewer in Syracuse, New York, achieved between 18 and 55 percent removal of total suspended solids with flow rates ranging from 0.2 MGD to 7.6 MGD. The results indicated that removal efficiencies greater than 50 percent were possible when the influent concentrations of were above about 250 mg/L (EPA, 1993).

To evaluate the effectiveness of swirl concentrators for treating urban runoff, the distribution of particle settling velocities in urban runoff was compared to the concentrator design capacity (i.e., 90 percent removal of particles with settling velocities greater than 2.5 cm/sec). A typical distribution profile for particle settling velocities in urban runoff, based on the results of the Nationwide Urban Runoff Program (NURP) study, is shown below (Driscoll et al., 1986):

Size Fraction	Percent of Particle Mass in Runoff	Settling Velocity (cm/sec)
Silt	0-20	0.0025
Silt	20-40	0.0025
Silt	40-60	0.013
Very fine sand	60-80	0.059
Sand	80-100	0.550

Because the settling velocities for most suspended solids in urban runoff are significantly lower than the separator design capacity, it does not appear that a swirl separator would be effective in treating urban runoff. This is particularly important when considering the other pollutants commonly found in urban runoff, such as metals and organic contaminants which adhere to the particulates present in runoff. These other contaminants are usually associated with the finer-grained particles which have a greater

amount of surface area per volume than the larger grit-sized particles. Therefore, it does not appear that separators will significantly improve the quality of stormwater discharged from the Ballard basin after separation.

Because the swirl/vortex separators are more effective in removing the coarse grained material, they may reduce the amount of sediments that would tend to deposit near the outfall. However, because they selectively remove the larger particles, which carry less pollutants than the finer-grained materials, it is uncertain whether these devices would have a significant effect on the sediment impact zone offshore of the outfall.

In addition, the underflow from the swirl separators and vortex concentrators which constitutes approximately 3 to 10 percent of the total flow and contains the concentrated sediments must be discharged back into the sanitary sewer.

Loading Comparisons

For comparison purposes and to assess potential impacts on water quality, stormwater pollutant loadings after separation have been calculated for two conditions: 1) no treatment of stormwater and 2) all runoff treated in compost filters or equivalent prior to discharge. The loading estimates for the without treatment option were calculated as the product of total annual runoff as shown in Table 5 times the average concentration in stormwater runoff as shown in Table 4.

For the treatment option, the total annual loading described above was reduced according to the pollutant removal efficiencies described earlier for the compost filters. In addition, it was assumed that only about 60 percent of the runoff in any given year was routed through the filters, with the remaining 40 percent being bypassed around the filters and discharged without treatment to the ship canal (i.e., King County design storm).

Estimated pollutant loadings to the ship canal before and after separation of the Ballard basin are summarized in Table 6.

For comparison purposes, existing pollutant loadings are presented for the following two conditions:

- The 1981 to 1983 base period without CSO control.
- After completion of the proposed new Fort Lawton tunnel and improvements at the West Point treatment plant.

Pollutant loadings are calculated based on the estimated annual flow and the average contaminant concentrations reported in the four Metro CSOs. The results indicate that proposed enlargement of the Fort Lawton tunnel and improvements to the West Point treatment plant achieve the greatest reductions in pollutant loadings to the ship canal (77 to 81 percent). Although with treatment, the estimated loadings for some pollutants after separation would be lower than the CSO loadings for the 1981-1983 baseline condition, separation of combined sewers in the Ballard basin would reverse most of the benefits achieved by the proposed system improvements. For example, if stormwater is treated

Table 6. Pollutant loadings to Ship Canal before and after separation of Ballard basin 3.

	Existing CSO Loading		Stormwater after separation		
	1981-1983 Base condition (a)	Tunnel/plant improvements (b)	Without treatment	Compost filter (c)	Compost filter (d)
Flow (Mgal/yr)	90	17 - 21	115	115	115
Cadmium (lb/yr)	0.83	0.16 - 0.19	1.33	1.28	1.26
Chromium (lb/yr)	9.90	1.87 - 2.31	3.74	2.15	1.35
Copper (lb/yr)	15.16	2.86 - 3.54	15.4	9.95	7.22
Lead (lb/yr)	13.94	2.63 - 3.25	27.8	13.5	6.29
Zinc (lb/yr)	55.51	10.5 - 13.0	98.8	53.2	30.3
PAH (lb/yr)	0.73	0.14 - 0.17	2.19	1.01	0.42
Total Phthalates (lb/yr)	13.25	2.50 - 3.09	1.06	1.06	1.06
Total suspended solids (lb/yr)	29,099	5,496 - 6,790	31,076	15,227	7,303

(a) Base conditions without CSO control (for 1981 through 1983).
(b) With construction of new Fort Lawton tunnel and improvements to the West Point wastewater treatment plant. Range reflects variability in plant operating level. After separation, overflows decline to approximately 0 Mgal/yr.
(c) Filter designed to treat runoff from King County design storm (1-month, 24-hr).
(d) Filter designed to treat runoff from Ecology design storm (6-month, 24-hr).

prior to discharge in compost filters designed to handle flows from the King County design storm, loadings for most pollutants after separation would still be 2 to 7 times greater than the estimated CSO loadings after tunnel/plant improvements. Only chromium and total phthalate loadings would be reduced; chromium loadings would decline by as much as 6 percent, while total phthalate loadings would drop by a factor of 2 to 3. Even if stormwater treatment facilities are designed for the larger Ecology design storm, loadings for most pollutants after separation (cadmium, copper, lead, zinc, PAH, and TSS) would still exceed the CSO loadings that are predicted to occur after construction of proposed sewer system improvements.

Without treatment, with the exception of total phthalate, pollutant loadings to the ship canal after treatment would be between 2 to 15 times greater than the estimated CSO loadings after the proposed system improvements are constructed. Total phthalate loadings would decline by about 60 to 65 percent. In addition, cadmium, lead, zinc, and PAH loadings to the ship canal from untreated stormwater would be approximately 2 to 3 times greater than the uncontrolled CSO loadings estimated for the 1981-1983 baseline condition. However, chromium and phthalate loadings would be about 3 and 13 times lower, respectively than the uncontrolled CSO loadings, while copper and total suspended solids loadings would remain about the same.

Increased loadings after separation are caused by the significantly larger volume of stormwater that would discharge to the canal (115 million gallons per year) compared to the baseline (90 million gallons per year) CSO volumes and those that are predicted to occur after proposed improvements to the combined sewer system are constructed (17 to 21 million gallons per year). Based on these results, it is clear that unless stormwater is treated, sewer separation in the Ballard basin provides no benefit to water quality in the ship canal and in fact, would contribute greater pollutant loadings than CSO discharges.

Spill Potential

Spills from transportation-related sources also pose a potential threat to receiving water quality in areas served by separate storm drain systems. Based on Ecology records, only about 20 percent of the 300 spills reported in Washington state between 1992 and 1993 occurred in the public right-of-way (i.e., roadway spills). The majority of spills occurred on private property (Adolfson 1994). Approximately 91 percent of the traffic-related spills involved petroleum compounds, with the quantity of material spilled generally less than 100 gallons.

The potential for spills can be related to the accident frequency and traffic volume, particularly the amount of truck traffic at a particular intersection. The major arterials in the Ballard CSO basin include 24th Avenue NW, NW 65th Street, NW 80th Street, and NW 85th Street. Average daily traffic volumes for 1993, accident frequency (based on 1998-1993 records), and probability of a spill at these intersections are summarized below:

Intersection	Average Daily Traffic	1988-1993 Total Accidents	Accident Rate[a]	Spill Probability[b]
16th NW and NW 85th	16,600	19	0.5	1/66 yrs
17th NW and NW 65th	16,375	13	0.7	1/48 yrs
20th NW and NW 65th	12,900	11	0.8	1/53 yrs
24th NW and NW 65th	20,300	34	1.5	1/18 yrs
24th NW and NW 80th	16,100	29	1.6	1/23 yrs
24th NW and NW 85th	17,300	36	1.9	1/17 yrs

a Number of accidents per million vehicles.

b Assumes that trucks account for 10 percent of the total traffic volume and that 5 percent of the accidents involving trucks result in a spill.

There are no designated truck routes within the study area, although the section of 24th Avenue NW between Market and NW 65th Street, which is located immediately south of the Ballard basin is a designated truck route. Assuming that trucks account for approximately 10 percent of the total traffic and that 5 percent of all truck accidents result in a spill, the probability of a spill occurring at any of these intersections ranges from about one every 50 to 70 years at the arterial intersections between 16th Avenue NW and 20th Avenue NW to about one every 17 to 23 years at the three arterial intersections on 24th Avenue NW. Because the probability of a spill occurring at all intersections is fairly low, spill containment (e.g., oil/water separators) is not recommended. The compost filter units which are equipped with a baffle to collect floating material, would provide adequate spill containment for these areas.

Adolfson, M. Personal communication (memorandum to Steve Merrill, Brown and Caldwell Consulting Engineers), Adolfson and Associates, Inc., Seattle, WA, February 7, 1994.

Driscoll, E.D., D. DiToro, D. Gaboury, and P. Shelley. *Methodology for Analysis of Detention Basins for Control of Urban Runoff Quality.* EPA 440/5-87-001. Woodward-Clyde Consultants, Walnut Creek, CA, 1986.

Ecology. *Stormwater Management Manual for the Puget Sound Basin (The Technical Manual).* 91-75. Washington State Department of Ecology, Olympia, WA, 1992.

EPA. *Manual for Combined Sewer Overflow Control.* EPA/625/R-93/007. U.S. Environmental Protection Agency, Office of Research and Development, Washington, D.C., 1993.

King County. *Surface Water Design Manual.* King County, Department of Public Works, Seattle, WA, 1990.

Merrill, S. Personal communication (phone conversation with Beth Schmoyer, Herrera Environmental Consultants), Brown and Caldwell Consulting Engineers, Seattle, WA, February 9, 1994.

Merrill, S. Personal communication (letter to Claudia Corson, Seattle Drainage and Wastewater Utility), Brown and Caldwell Consulting Engineers, Seattle, WA, May 16, 1989.

Metro. *Metro CSO Plan Finalization, Technical Memorandum - Task 2.01.* Gordon Culp, CWC-DHR, Inc., 1987.

Metro. *TPPS Technical Report A2: Collection System Evaluation, Data Appendices.* Toxicant Pretreatment Planning Study, Report No. 4B. Municipality of Metropolitan Seattle, Water Quality Division, Seattle, WA, 1984.

Pfaender, M. Personal communication (telephone conversation with Barbara Zaroff, Herrera Environmental Consultants), Seattle Engineering Department, January 24, 1994.

Public Health Service. *Toxicological Profile for Diethyl Phthalate (Draft).* U.S. Department of Health and Human Services, Agency for Toxic Substances and Disease Registry, Washington, D.C., 1993.

R.W. Beck. *Hydrologic Analysis for Lake Washington Pollution Abatement Project.* Prepared for the City of Renton. R.W. Beck and Associates, Seattle, WA, 1993.

Roberts, C. Personal communication (memorandum to Jennie Goldberg, Seattle Drainage and Wastewater Utility), Brown and Caldwell Consulting Engineers, Seattle, WA, February 1, 1994.

W & H Pacific. *Compost Storm Water Filter (CSF). Technical Memorandum No. 12: Second Year Test Results (1992-1993) for the 195th Avenue CSF™ Prototype.* Portland, OR, 1993.