PORTIONS OF SECTIONS 16, 21 & 28, TWP 24 N., RGE. 6 E., W.M.

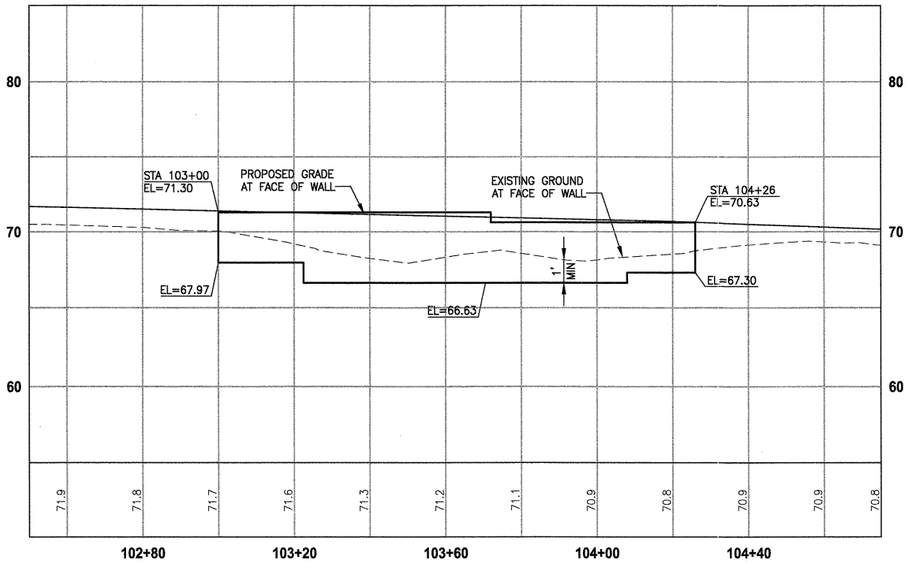

RIGHT STRUCTURAL EARTH WALL

WALL #1 (FILL) A-LINE

HORIZ: 1"=20'
VERT: 1"=5'

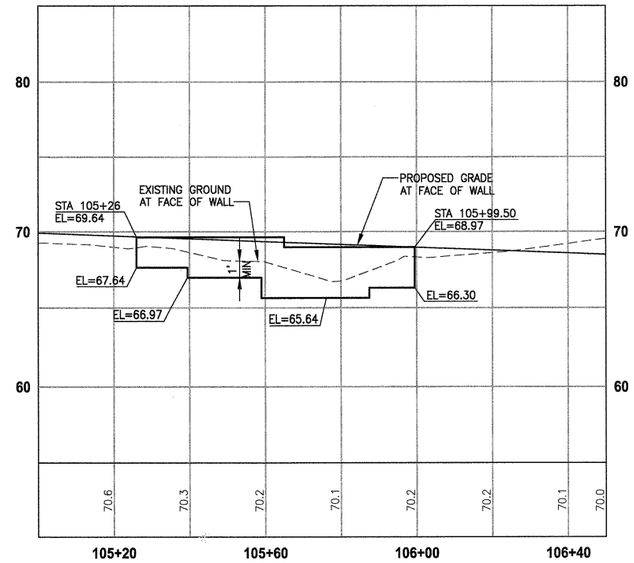

RIGHT STRUCTURAL EARTH WALL

WALL #2 (FILL) A-LINE

HORIZ: 1"=20'
VERT: 1"=5'

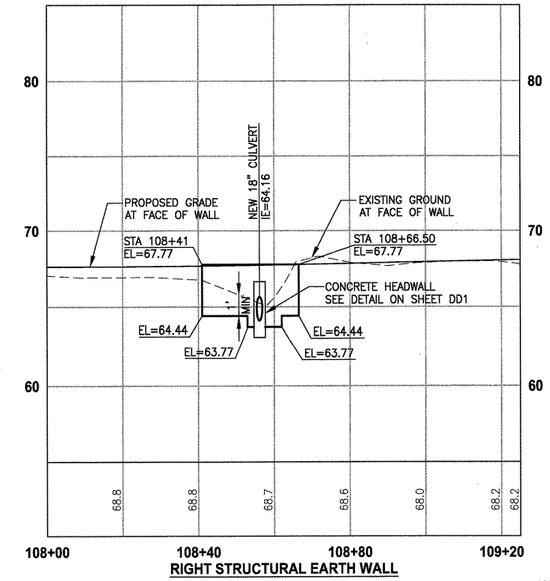

RIGHT STRUCTURAL EARTH WALL

WALL #3 (FILL) A-LINE

HORIZ: 1"=20'
VERT: 1"=5'

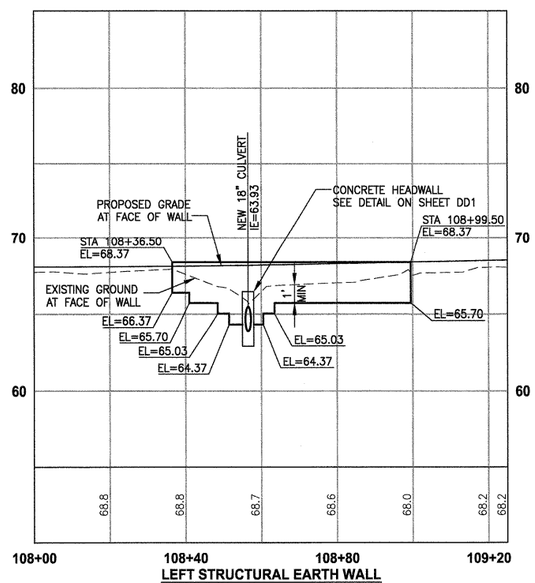

LEFT STRUCTURAL EARTH WALL

WALL #4 (FILL) A-LINE

HORIZ: 1"=20'
VERT: 1"=5'

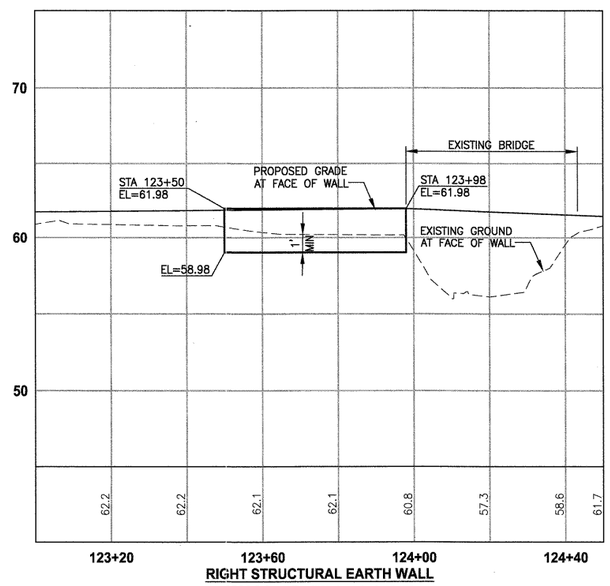

RIGHT STRUCTURAL EARTH WALL

WALL #5 (FILL) A-LINE

HORIZ: 1"=20'
VERT: 1"=5'

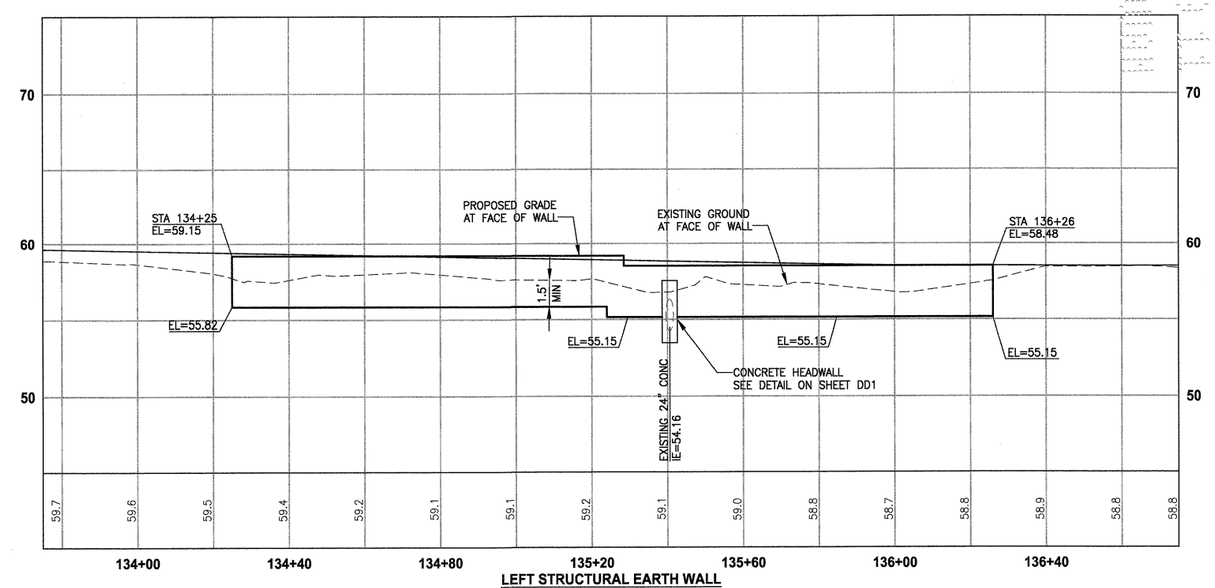

LEFT STRUCTURAL EARTH WALL

WALL #6 (FILL) A-LINE

HORIZ: 1"=20'
VERT: 1"=5'

APPROVED
DEC 02 2011
PUBLIC WORKS ENG.
CITY OF ISSAQUAH

	REVISIONS	DATE	BY

DESIGNED J. JUN
DRAWN B. PURGANAN
CHECKED Y. HO
APPROVED H. LONGFELLOW

ONE INCH AT FULL SCALE.
IF NOT, SCALE ACCORDINGLY.
FILE NAME BL1521075P13T02WP-01
JOB No. 554-1521-075
DATE NOVEMBER 2011

YAMMIE Y. HO
STATE OF WASHINGTON
40829
REGISTERED
PROFESSIONAL ENGINEER
11-23-11

Parametrix
ENGINEERING . PLANNING . ENVIRONMENTAL SCIENCES
411 108TH AVENUE N.E., SUITE 1800
BELLEVUE, WASHINGTON 98004
T. 425.458.6200 F. 425.458.6363
www.parametrix.com

PROJECT NAME
EAST LAKE SAMMAMISH
MASTER PLAN TRAIL, ISSAQUAH SEGMENT
GILMAN BLVD TO ISSAQUAH CITY LIMITS

WALL PROFILES

DRAWING NO.
60 OF 99
WP1

LAYOUT: WP1 PATH: U:\Bell\Projects\Clients\1521-King Cnty\554-1521-075-ELST\99Svcs\CADD\Phase 13\Task 02\Dwg\ PLOTTED BY: purgabut DATE: Wednesday, November 23, 2011 10:47:27 AM

PORTIONS OF SECTIONS 16, 21 & 28, TWP 24 N., RGE. 6 E., W.M.

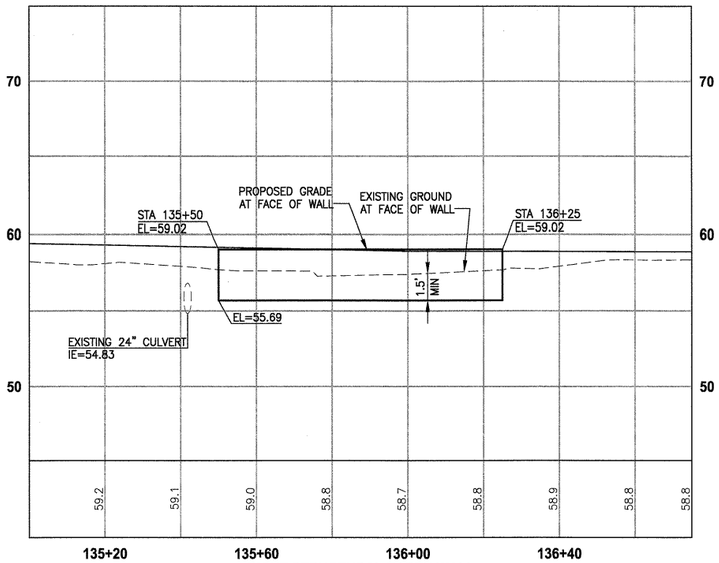

RIGHT STRUCTURAL EARTH WALL

WALL #7 (FILL) A-LINE

HORIZ: 1"=20'
VERT: 1"=5'

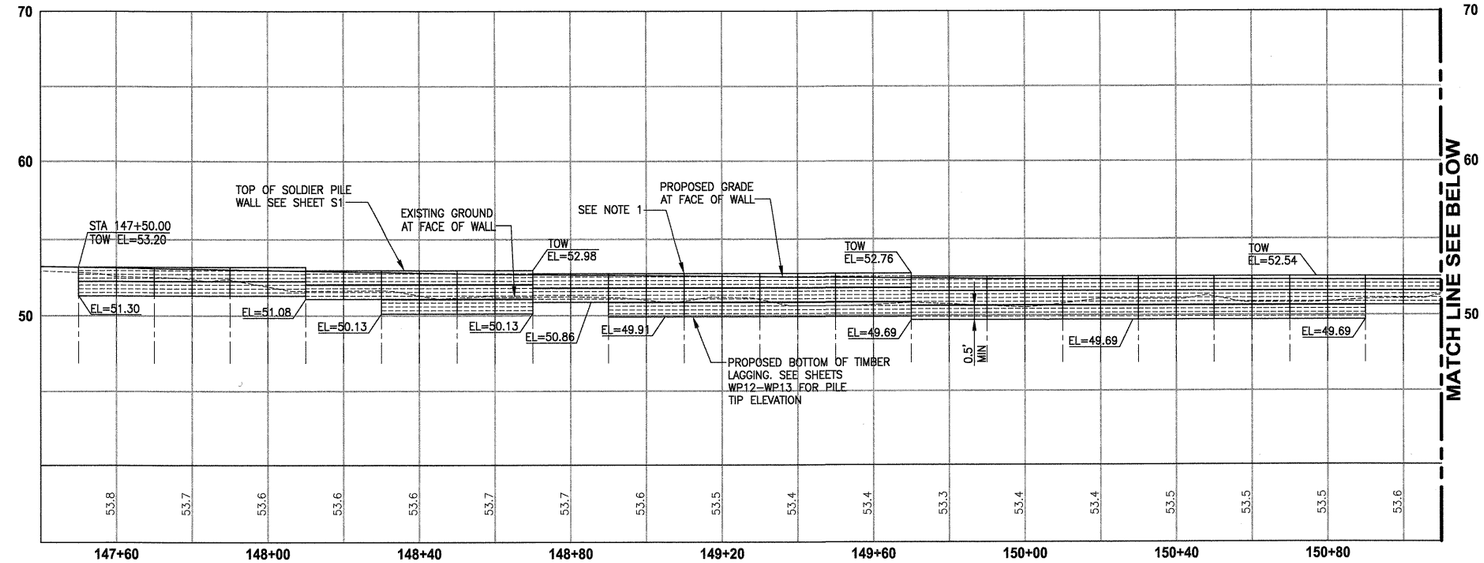

LEFT SOLDIER PILE WALL

WALL #8 (FILL) A-LINE

HORIZ: 1"=20'
VERT: 1"=5'

NOTE:

1. PILES ARE SHOWN SCHEMATICALLY ON THESE PROFILES AS REFERENCE, SEE SHEETS WP11 AND WP12 FOR DETAILED PILE LAYOUT AND PILE TIP ELEVATIONS.

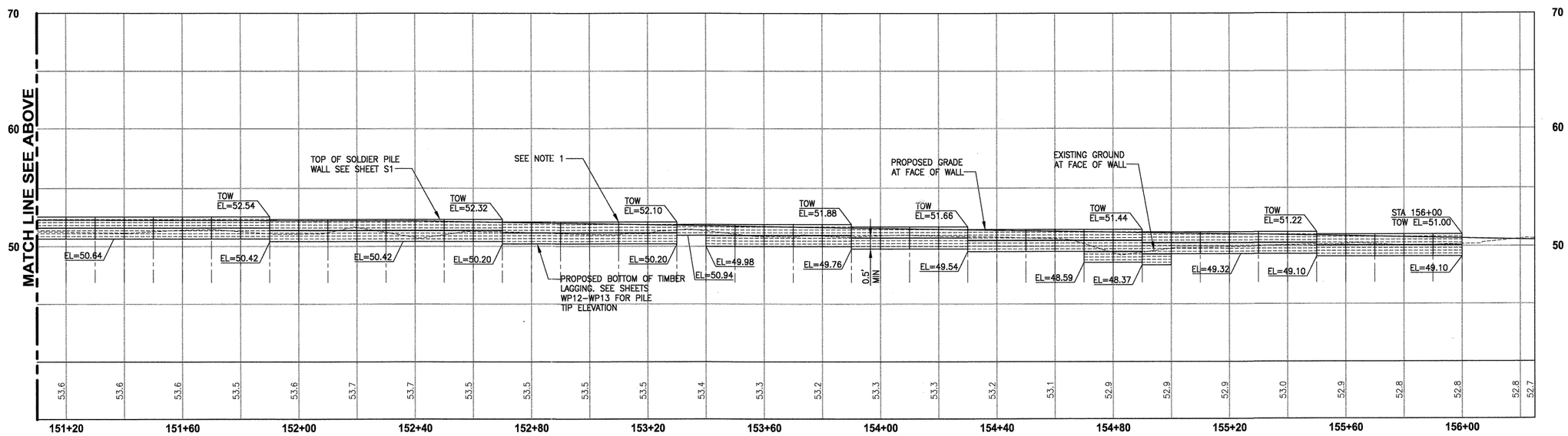

LEFT SOLDIER PILE WALL

WALL #8 (FILL) A-LINE

HORIZ: 1"=20'
VERT: 1"=5'

YAMMIE Y. HO
STATE OF WASHINGTON
40829
REGISTERED
PROFESSIONAL ENGINEER
11-22-11

APPROVED
DEC 02 2011
PUBLIC WORKS ENG.
CITY OF ISSAQUAH

△	REVISIONS	DATE	BY

DESIGNED J. JUN
DRAWN B. PURGANAN
CHECKED Y. HO
APPROVED H. LONGFELLOW

ONE INCH AT FULL SCALE. IF NOT, SCALE ACCORDINGLY
FILE NAME BL1521075P13T02WP–01
JOB No. 554–1521–075
DATE NOVEMBER 2011

Parametrix
ENGINEERING . PLANNING . ENVIRONMENTAL SCIENCES
411 108TH AVENUE N.E., SUITE 1800
BELLEVUE, WASHINGTON 98004
T. 425.458.6200 F. 425.458.6363
www.parametrix.com

PROJECT NAME
EAST LAKE SAMMAMISH
MASTER PLAN TRAIL, ISSAQUAH SEGMENT
GILMAN BLVD TO ISSAQUAH CITY LIMITS

WALL PROFILES

DRAWING NO.
61 OF 99
WP2

LAYOUT: WP2 PATH: U:\Bell\Projects\Clients\1521-King Cnty\554-1521-075-ELST\99Svcs\CADD\Phase 13\Task 02\Dwg\ PLOTTED BY: purgabut DATE: Wednesday, November 23, 2011 10:52:41 AM

PORTIONS OF SECTIONS 16, 21 & 28, TWP 24 N., RGE. 6 E., W.M.

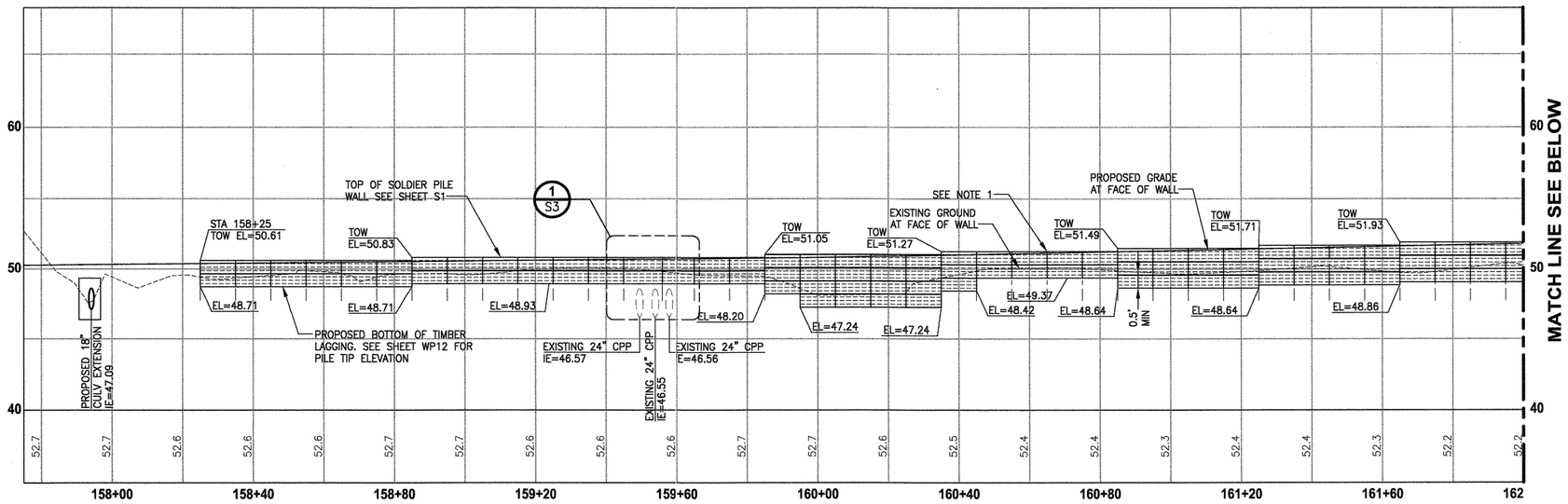

LEFT SOLDIER PILE WALL

WALL #9 (FILL) A-LINE

HORIZ: 1"=20'
VERT: 1"=5'

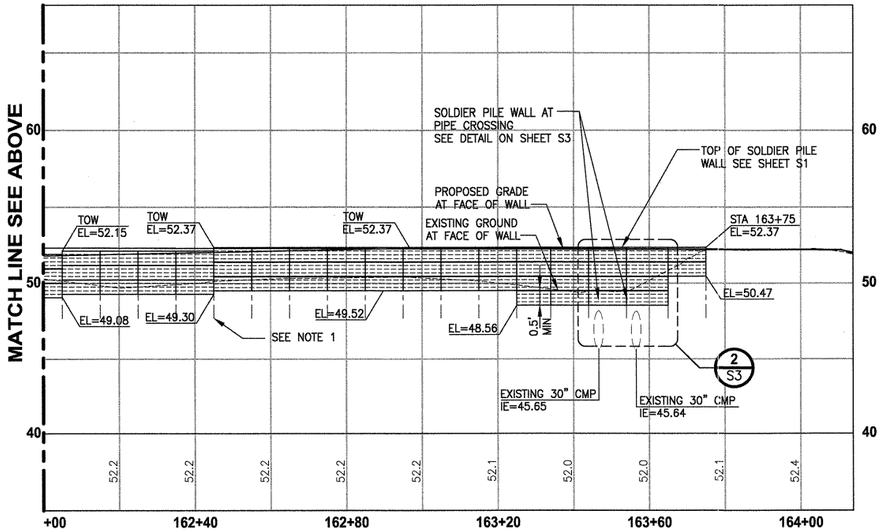

LEFT SOLDIER PILE WALL

WALL #9 (FILL) A-LINE

HORIZ: 1"=20'
VERT: 1"=5'

NOTE:

1. PILES ARE SHOWN SCHEMATICALLY ON THESE PROFILES AS REFERENCE, SEE SHEETS WP11 AND WP12 FOR DETAILED PILE LAYOUT AND PILE TIP ELEVATIONS.

APPROVED
DEC 02 2011
PUBLIC WORKS ENG.
CITY OF ISSAQUAH

△	REVISIONS	DATE	BY

DESIGNED J. JUN
DRAWN B. PURGANAN
CHECKED Y. HO
APPROVED H. LONGFELLOW

ONE INCH AT FULL SCALE. IF NOT, SCALE ACCORDINGLY
FILE NAME BL1521075P13T02WP-01
JOB No. 554-1521-075
DATE NOVEMBER 2011

YAMMIE Y. HO STATE OF WASHINGTON 40889 REGISTERED PROFESSIONAL ENGINEER

Parametrix
ENGINEERING . PLANNING . ENVIRONMENTAL SCIENCES
411 108TH AVENUE N.E., SUITE 1800
BELLEVUE, WASHINGTON 98004
T. 425.458.6200 F. 425.458.6363
www.parametrix.com

PROJECT NAME
EAST LAKE SAMMAMISH
MASTER PLAN TRAIL, ISSAQUAH SEGMENT
GILMAN BLVD TO ISSAQUAH CITY LIMITS

WALL PROFILES

DRAWING NO.
62 OF 99
WP3

LAYOUT: WP3 PATH: U:\Bel\Projects\Clients\1521-King Cnty\554-1521-075-ELST\99Svcs\CADD\Phase 13\Task 02\Dwg\ PLOTTED BY: purgpbut DATE: Wednesday, November 23, 2011 10:55:29 AM

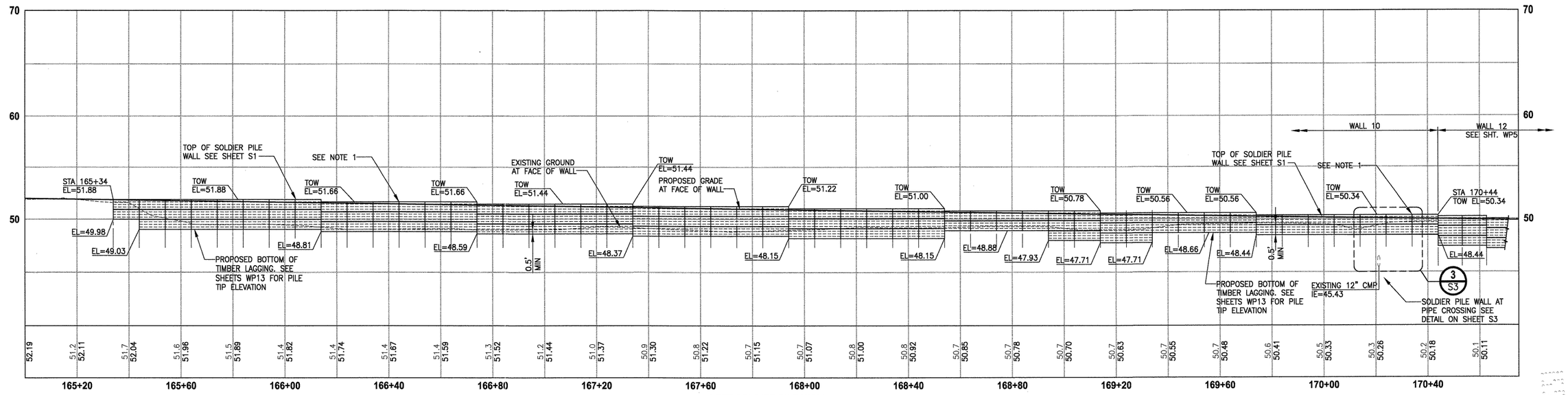

LEFT SOLDIER PILE WALL

WALL #10 (FILL) A-LINE

HORIZ: 1"=20'
VERT: 1"=5'

NOTE:

1. PILES ARE SHOWN SCHEMATICALLY ON THESE PROFILES AS REFERENCE, SEE SHEETS WP11 AND WP12 FOR DETAILED PILE LAYOUT AND PILE TIP ELEVATIONS.

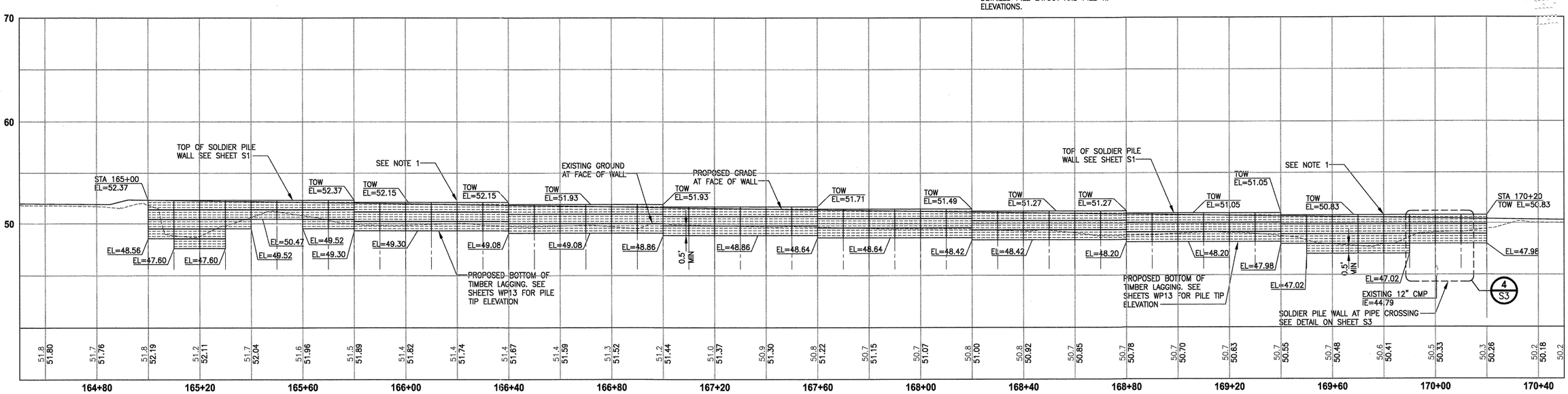

RIGHT SOLDIER PILE WALL

WALL #11 (FILL) A-LINE

HORIZ: 1"=20'
VERT: 1"=5'

APPROVED
DEC 02 2011
PUBLIC WORKS ENG.
CITY OF ISSAQUAH

	REVISIONS	DATE	BY

DESIGNED J. JUN
DRAWN B. PURGANAN
CHECKED Y. HO
APPROVED H. LONGFELLOW

ONE INCH AT FULL SCALE. IF NOT, SCALE ACCORDINGLY
FILE NAME BL1521075P13T02WP-01
JOB No. 554-1521-075
DATE NOVEMBER 2011

YAMMIE Y. HO
STATE OF WASHINGTON
40829
REGISTERED PROFESSIONAL ENGINEER
11-23-11

Parametrix
ENGINEERING . PLANNING . ENVIRONMENTAL SCIENCES
411 108TH AVENUE N.E., SUITE 1800
BELLEVUE, WASHINGTON 98004
T. 425.458.6200 F. 425.458.6363
www.parametrix.com

PROJECT NAME
EAST LAKE SAMMAMISH
MASTER PLAN TRAIL, ISSAQUAH SEGMENT
GILMAN BLVD TO ISSAQUAH CITY LIMITS

WALL PROFILES

DRAWING NO.
63 OF 99
WP4

LAYOUT: WP4 PATH: U:\Bell\Projects\Clients\1521-King Cnty\554-1521-075-ELST\99Svcs\CADD\Phase 13\Task 02\Dwg\ PLOTTED BY: purgabut DATE: Wednesday, November 23, 2011 10:56:52 AM

PORTIONS OF SECTIONS 16, 21 & 28, TWP 24 N., RGE. 6 E., W.M.

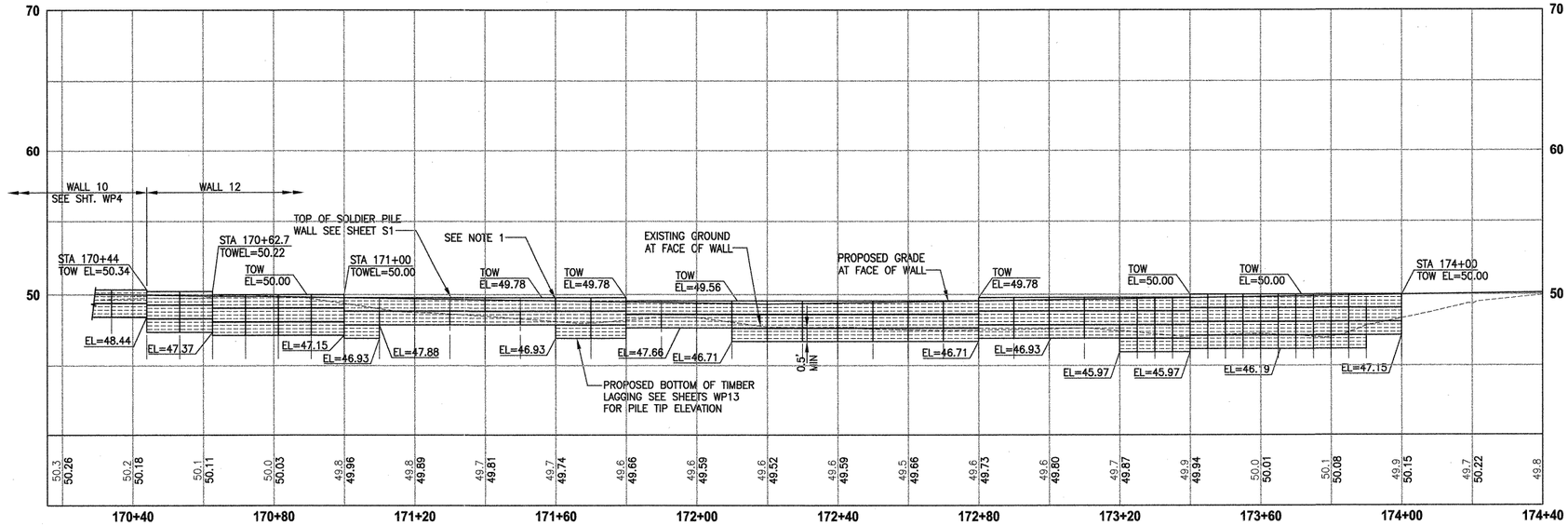

LEFT SOLDIER PILE WALL

WALL #12 (FILL) A-LINE

HORIZ: 1"=20'
VERT: 1"=5'

NOTE:

1. PILES ARE SHOWN SCHEMATICALLY ON THESE PROFILES AS REFERENCE, SEE SHEETS WP11 AND WP12 FOR DETAILED PILE LAYOUT AND PILE TIP ELEVATIONS.

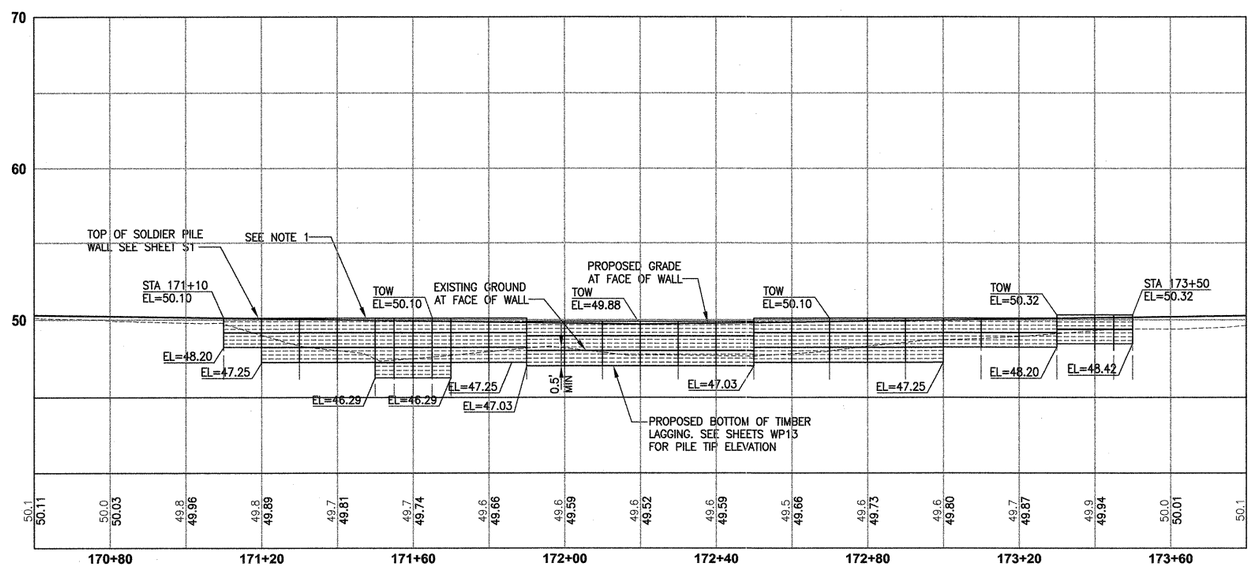

RIGHT SOLDIER PILE WALL

WALL #13 (FILL) A-LINE

HORIZ: 1"=20'
VERT: 1"=5'

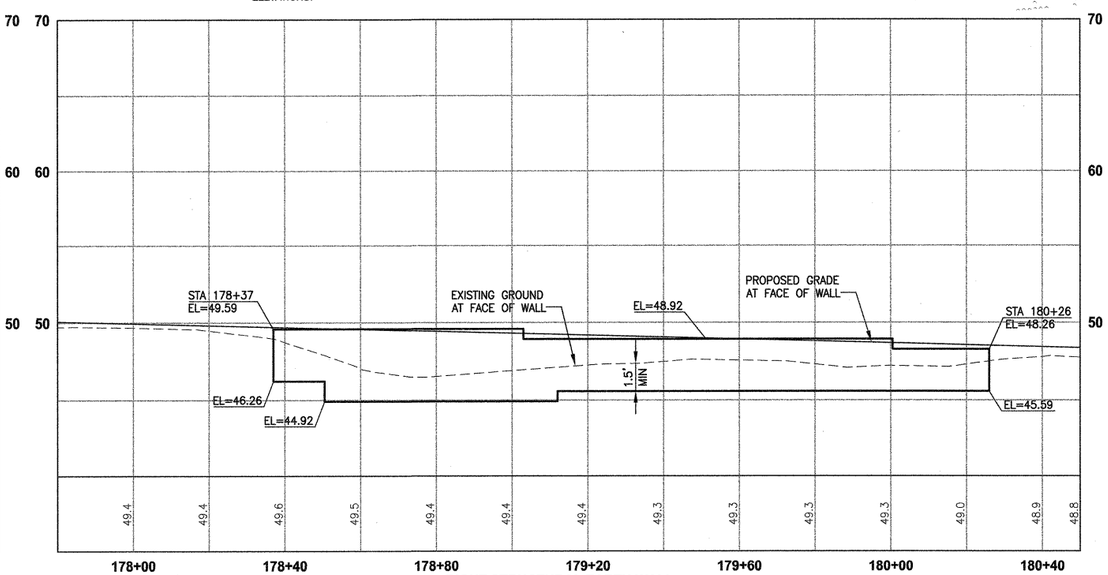

RIGHT STRUCTURAL EARTH WALL

WALL #14 (FILL) A-LINE

HORIZ: 1"=20'
VERT: 1"=5'

APPROVED
DEC 02 2011
PUBLIC WORKS ENG.
CITY OF ISSAQUAH

△	REVISIONS	DATE	BY

DESIGNED J. JUN
DRAWN B. PURGANAN
CHECKED Y. HO
APPROVED H. LONGFELLOW

ONE INCH AT FULL SCALE. IF NOT, SCALE ACCORDINGLY
FILE NAME BI1521075P13T02WP-01
JOB No. 554-1521-075
DATE NOVEMBER 2011

YAMMIE Y. HO
STATE OF WASHINGTON
40829
REGISTERED PROFESSIONAL ENGINEER
11-23-11

Parametrix
ENGINEERING . PLANNING . ENVIRONMENTAL SCIENCES
411 108TH AVENUE N.E., SUITE 1800
BELLEVUE, WASHINGTON 98004
T. 425.458.6200 F. 425.458.6363
www.parametrix.com

PROJECT NAME
EAST LAKE SAMMAMISH
MASTER PLAN TRAIL, ISSAQUAH SEGMENT
GILMAN BLVD TO ISSAQUAH CITY LIMITS

WALL PROFILES

DRAWING NO.
64 OF 99
WP5

LAYOUT: WP5 PATH: U:\Bell\Projects\Clients\1521-King Cty\554-1521-075-ELST\99Svcs\CADD\Phase 13\Task 02\Dwg\ PLOTTED BY: purgabut DATE: Wednesday, November 23, 2011 1:57:59 PM

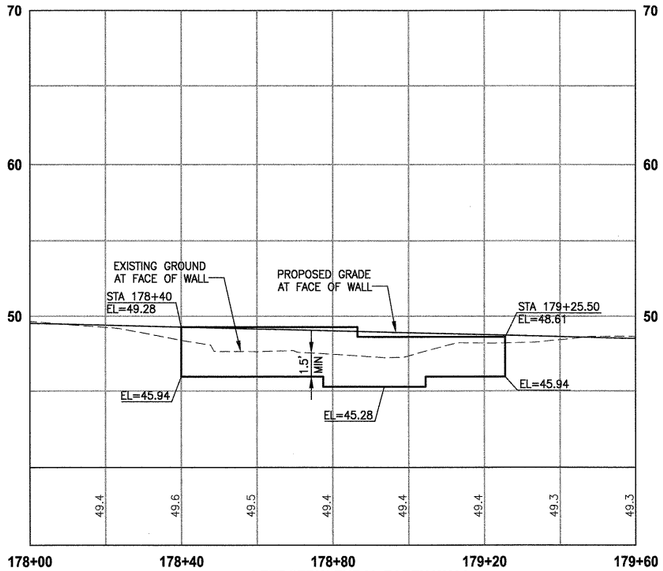

LEFT STRUCTURAL EARTH WALL

WALL #15 (FILL) A-LINE

HORIZ: 1"=20'
VERT: 1"=5'

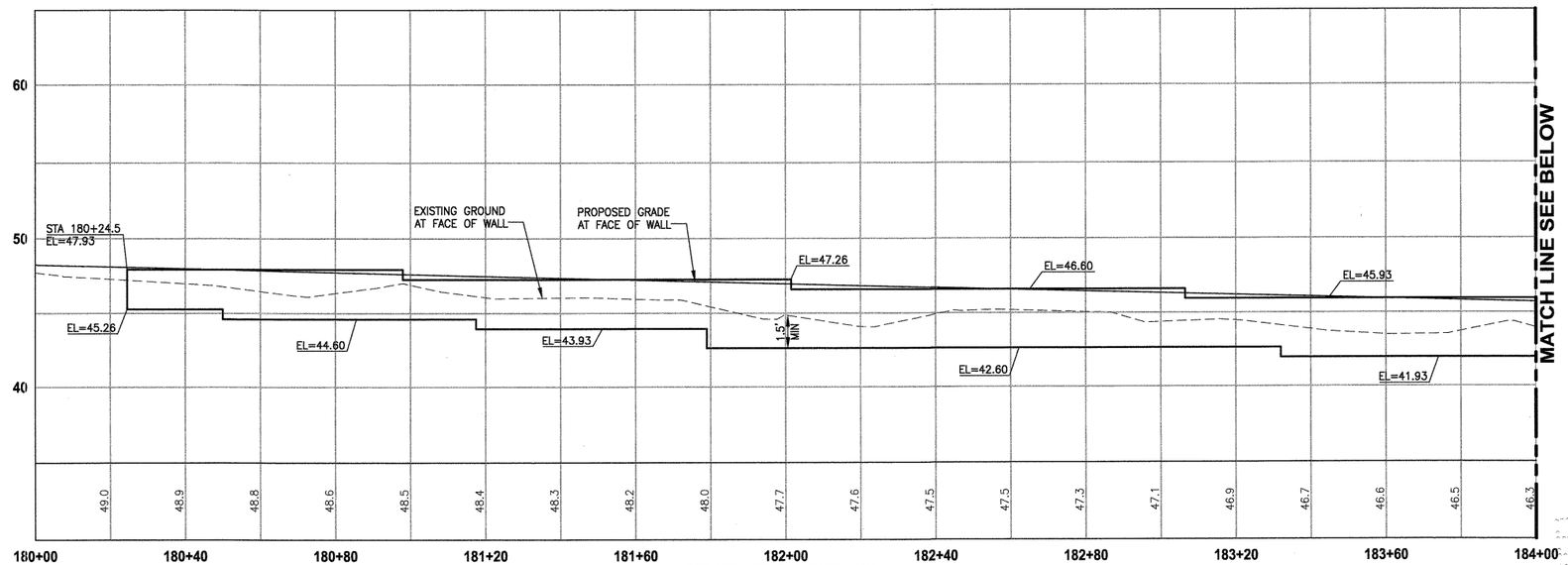

LEFT STRUCTURAL EARTH WALL

WALL #16 (FILL) A-LINE

HORIZ: 1"=20'
VERT: 1"=5'

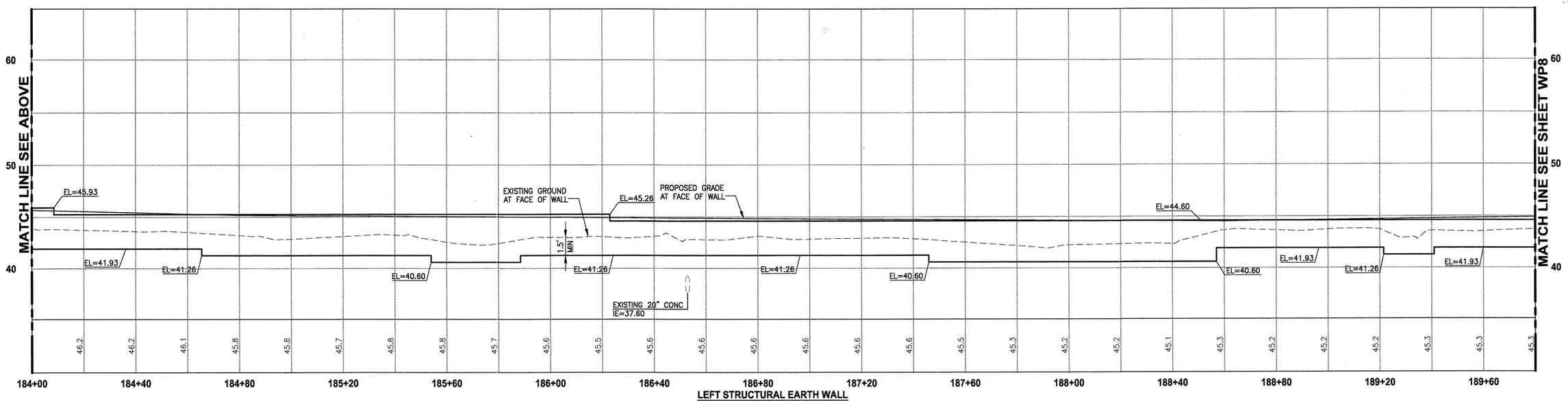

LEFT STRUCTURAL EARTH WALL

WALL #16 (FILL) A-LINE

HORIZ: 1"=20'
VERT: 1"=5'

APPROVED
DEC 02 2011
PUBLIC WORKS ENG
CITY OF ISSAQUAH

△	REVISIONS	DATE	BY

DESIGNED J. JUN
DRAWN B. PURGANAN
CHECKED Y. HO
APPROVED H. LONGFELLOW

ONE INCH AT FULL SCALE, IF NOT, SCALE ACCORDINGLY
FILE NAME BL1521075P13T02WP-01
JOB No. 554-1521-075
DATE NOVEMBER 2011

YAMMIE Y. HO · STATE OF WASHINGTON · 40829 · REGISTERED PROFESSIONAL ENGINEER · 11-23-11

Parametrix
ENGINEERING . PLANNING . ENVIRONMENTAL SCIENCES
411 108TH AVENUE N.E., SUITE 1800
BELLEVUE, WASHINGTON 98004
T. 425.458.6200 F. 425.458.6363
www.parametrix.com

PROJECT NAME
EAST LAKE SAMMAMISH
MASTER PLAN TRAIL, ISSAQUAH SEGMENT
GILMAN BLVD TO ISSAQUAH CITY LIMITS

WALL PROFILES

DRAWING NO.
65 OF 99
WP6

LAYOUT: WP6 PATH: U:\Bell\Projects\Clients\1521-King Cnty\554-1521-075-ELST\99Svcs\CADD\Phase 13\Task 02\Dwg\ PLOTTED BY: purgabut DATE: Wednesday, November 23, 2011 10:59:29 AM

PORTIONS OF SECTIONS 16, 21 & 28, TWP 24 N., RGE. 6 E., W.M.

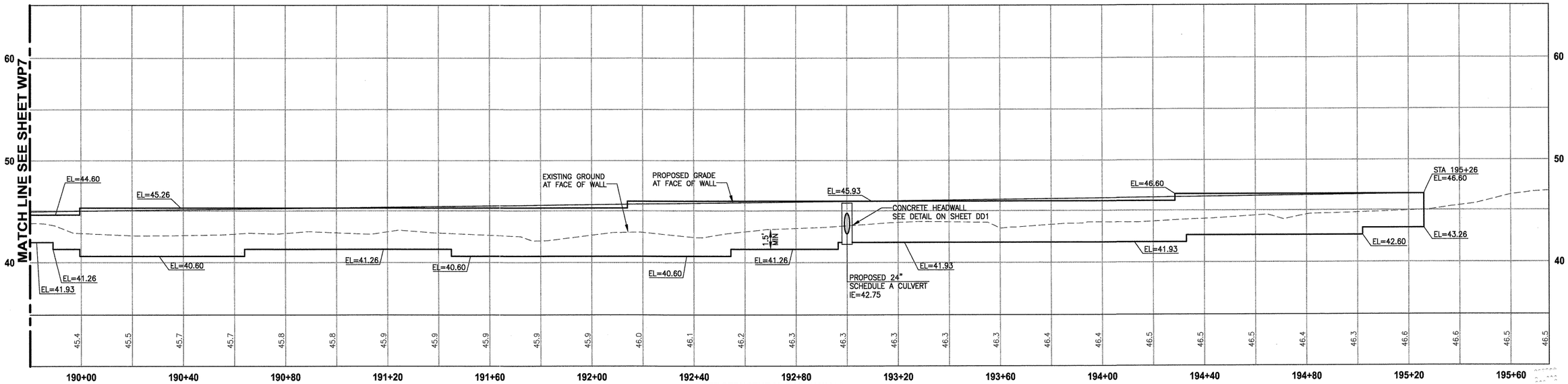

LEFT STRUCTURAL EARTH WALL

WALL #16 (FILL) A-LINE

HORIZ: 1"=20'
VERT: 1"=5'

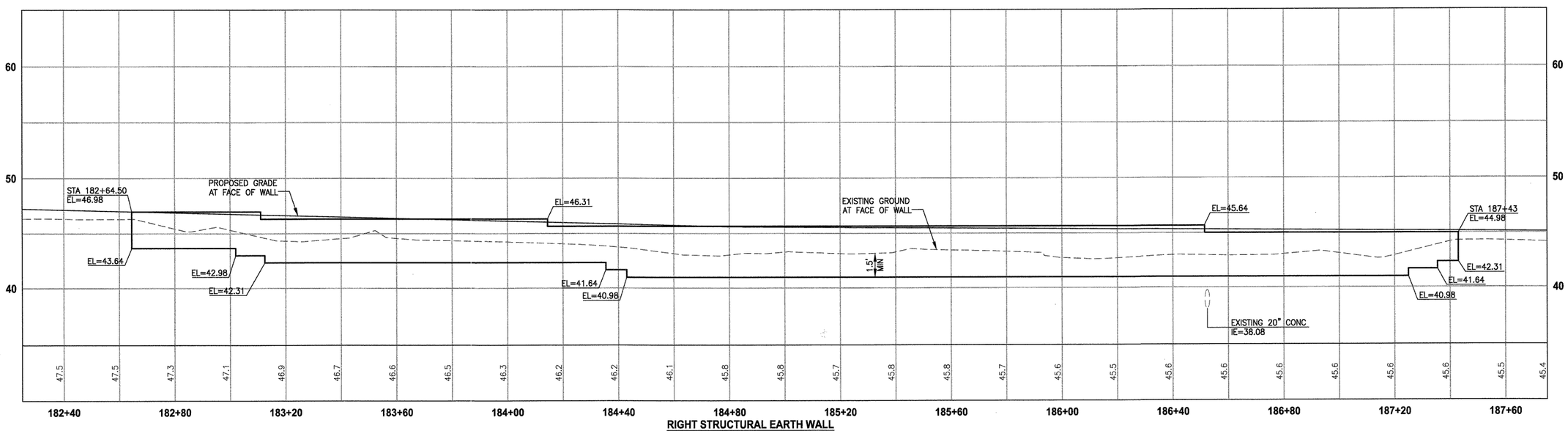

RIGHT STRUCTURAL EARTH WALL

WALL #17 (FILL) A-LINE

HORIZ: 1"=20'
VERT: 1"=5'

△	REVISIONS	DATE	BY

DESIGNED J. JUN
DRAWN B. PURGANAN
CHECKED Y. HO
APPROVED H. LONGFELLOW

ONE INCH AT FULL SCALE. IF NOT, SCALE ACCORDINGLY
FILE NAME BL1521075P13T02WP-01
JOB No. 554-1521-075
DATE NOVEMBER 2011

YAMMIE Y. HO · STATE OF WASHINGTON · 40829 · 11-23-11 · REGISTERED PROFESSIONAL ENGINEER

Parametrix
ENGINEERING . PLANNING . ENVIRONMENTAL SCIENCES
411 108TH AVENUE N.E., SUITE 1800
BELLEVUE, WASHINGTON 98004
T. 425.458.6200 F. 425.458.6363
www.parametrix.com

PROJECT NAME
EAST LAKE SAMMAMISH MASTER PLAN TRAIL, ISSAQUAH SEGMENT
GILMAN BLVD TO ISSAQUAH CITY LIMITS

WALL PROFILES

DRAWING NO.
66 OF 99
WP7

LAYOUT: WP7 PATH: U:\Bell\Projects\Clients\1521-King Cnty\554-1521-075-ELST\99Svcs\CADD\Phase 13\Task 02\Dwg\ PLOTTED BY: purgabut DATE: Wednesday, November 23, 2011 11:00:11 AM

PORTIONS OF SECTIONS 16, 21 & 28, TWP 24 N., RGE. 6 E., W.M.

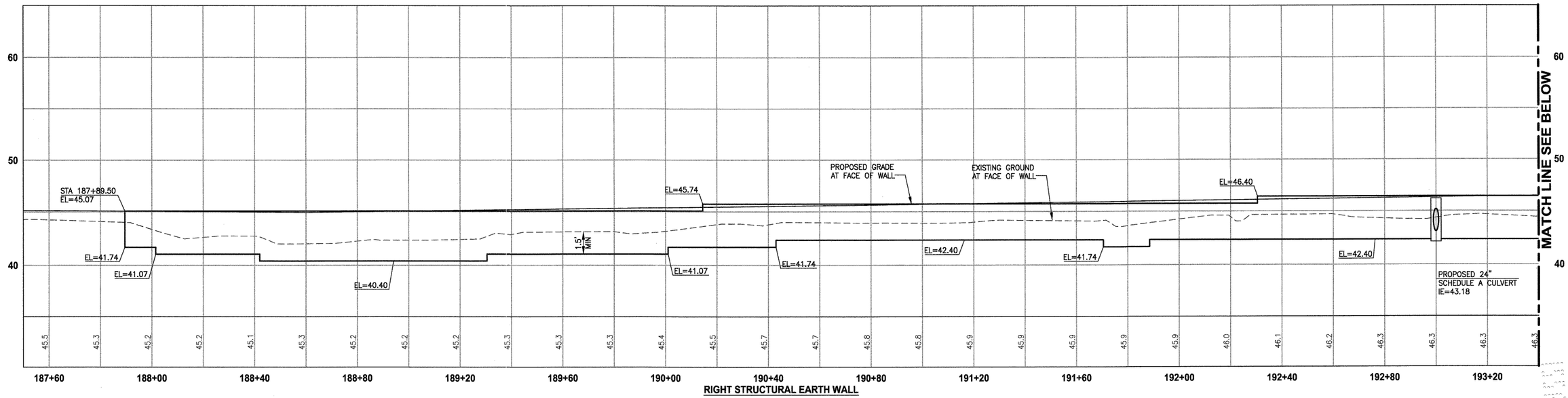

RIGHT STRUCTURAL EARTH WALL

WALL #18 (FILL) A-LINE

HORIZ: 1"=20'
VERT: 1"=5'

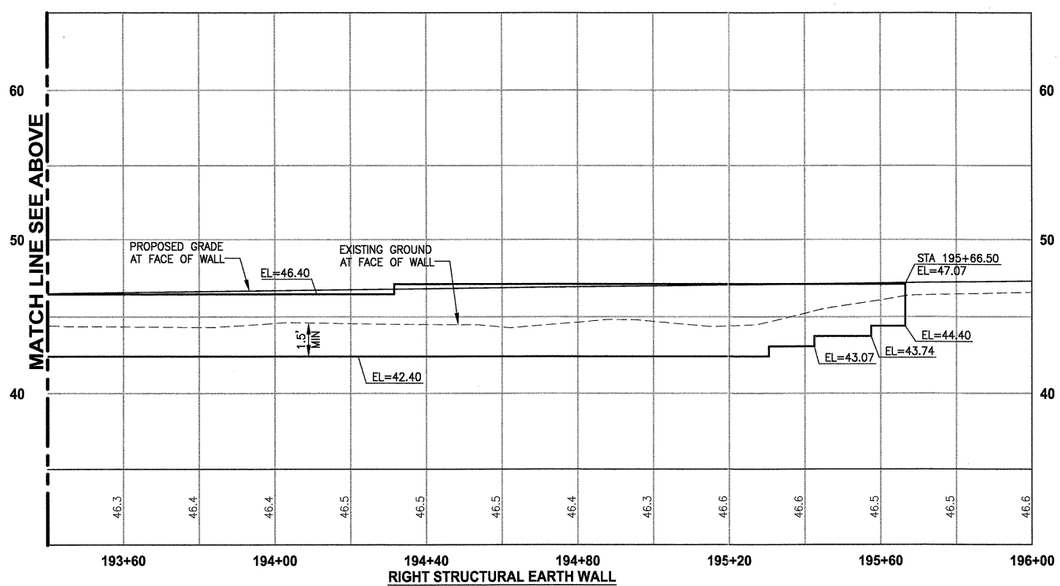

RIGHT STRUCTURAL EARTH WALL

WALL #18 (FILL) A-LINE

HORIZ: 1"=20'
VERT: 1"=5'

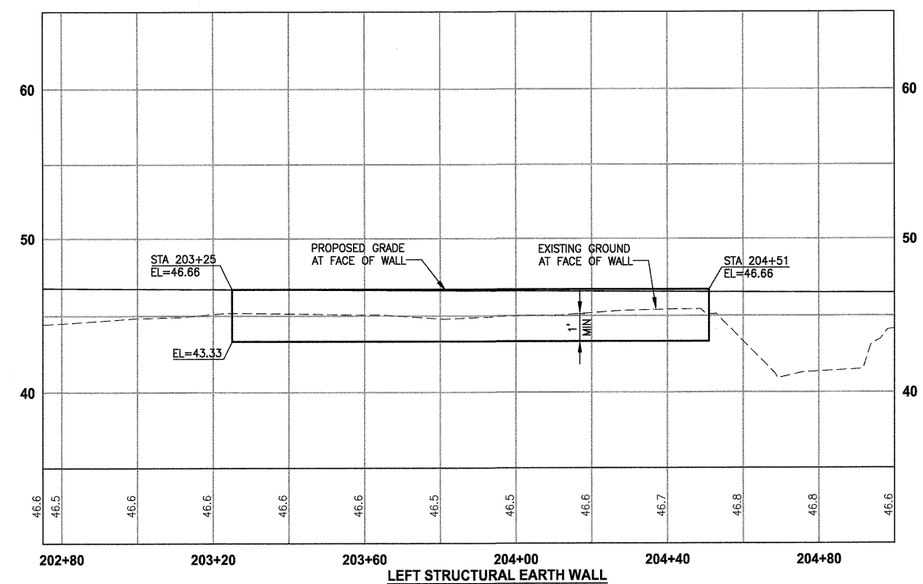

LEFT STRUCTURAL EARTH WALL

WALL #19 (FILL) A-LINE

HORIZ: 1"=20'
VERT: 1"=5'

APPROVED
DEC 06 2011
PUBLIC WORKS
CITY OF ISSAQUAH

	REVISIONS	DATE	BY

DESIGNED J. JUN
DRAWN B. PURGANAN
CHECKED Y. HO
APPROVED H. LONGFELLOW

ONE INCH AT FULL SCALE. IF NOT, SCALE ACCORDINGLY

FILE NAME BL1521075P13T02WP-01
JOB No. 554-1521-075
DATE NOVEMBER 2011

YAMMIE Y. HO
STATE OF WASHINGTON
40829
REGISTERED
PROFESSIONAL ENGINEER
11-23-11

Parametrix
ENGINEERING . PLANNING . ENVIRONMENTAL SCIENCES
411 108TH AVENUE N.E., SUITE 1800
BELLEVUE, WASHINGTON 98004
T. 425.458.6200 F. 425.458.6363
www.parametrix.com

PROJECT NAME
EAST LAKE SAMMAMISH
MASTER PLAN TRAIL, ISSAQUAH SEGMENT
GILMAN BLVD TO ISSAQUAH CITY LIMITS

WALL PROFILES

DRAWING NO.
67 OF 99
WP8

LAYOUT: WP8 PATH: U:\Bell\Projects\Clients\1521-King Cnty\554-1521-075-ELST\99Svcs\CADD\Phase 13\Task 02\Dwg\ PLOTTED BY: purgabat DATE: Wednesday, November 23, 2011 11:01:12 AM

PORTIONS OF SECTIONS 16, 21 & 28, TWP 24 N., RGE. 6 E., W.M.

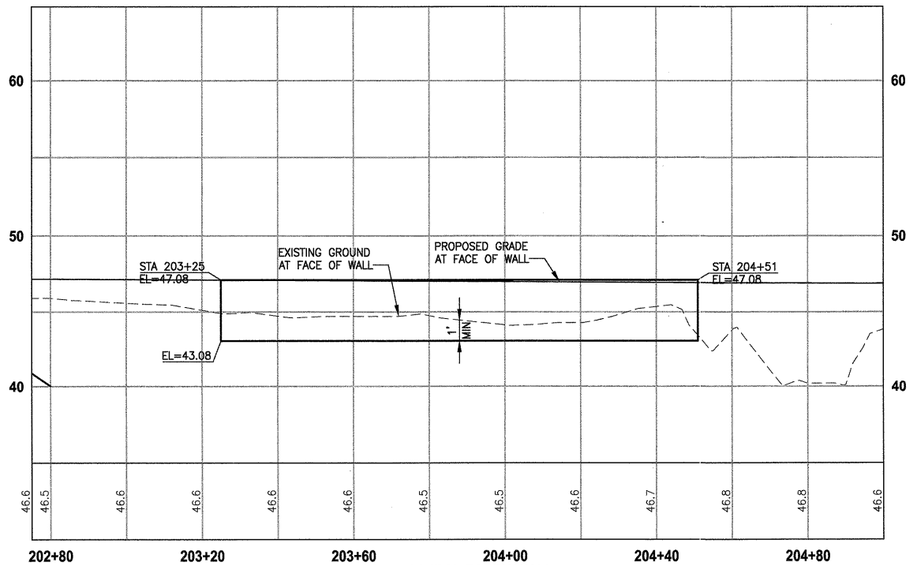

RIGHT STRUCTURAL EARTH WALL

WALL #20 (FILL) A-LINE

HORIZ: 1"=20'
VERT: 1"=5'

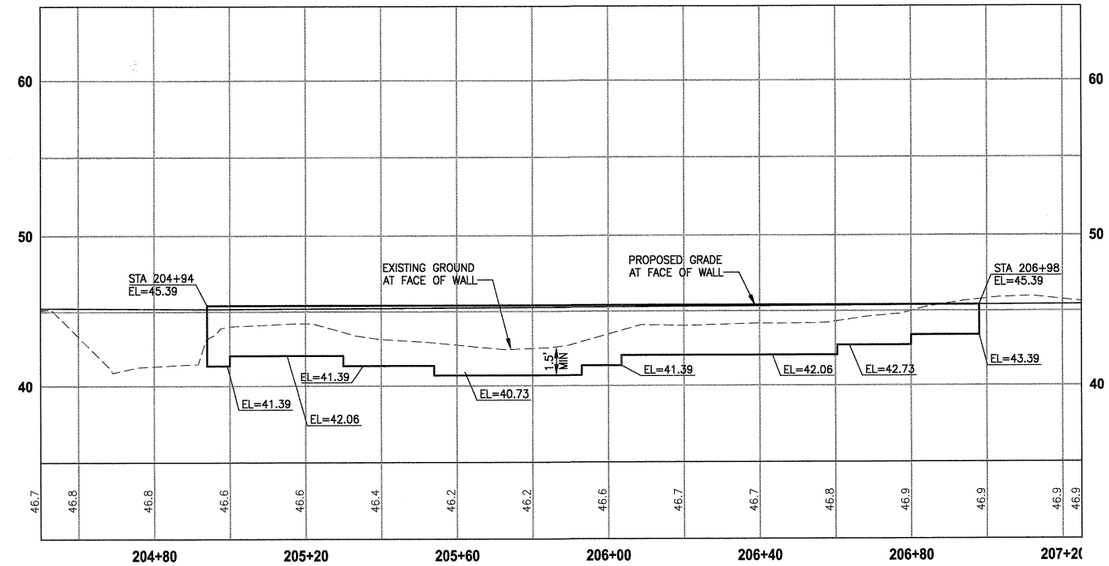

LEFT STRUCTURAL EARTH WALL

WALL #21 (FILL) A-LINE

HORIZ: 1"=20'
VERT: 1"=5'

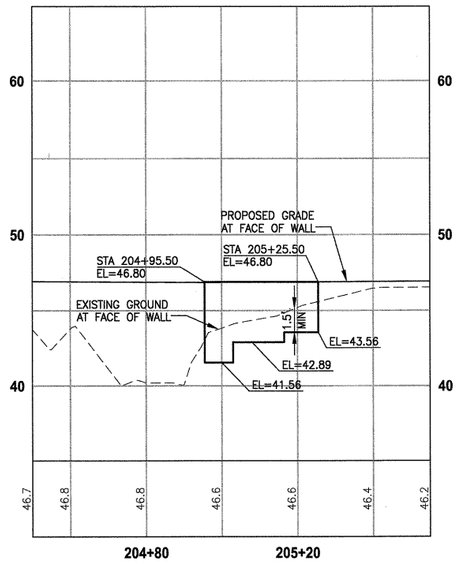

RIGHT STRUCTURAL EARTH WALL

WALL #22 (FILL) A-LINE

HORIZ: 1"=20'
VERT: 1"=5'

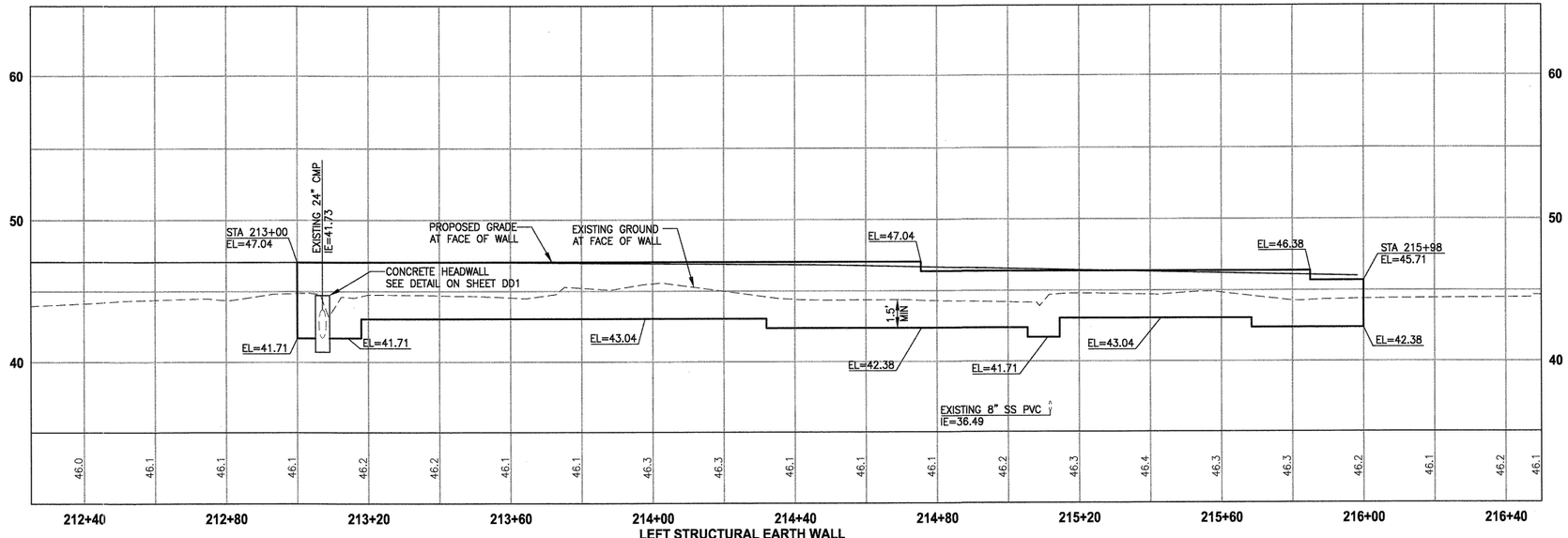

LEFT STRUCTURAL EARTH WALL

WALL #23 (FILL) A-LINE

HORIZ: 1"=20'
VERT: 1"=5'

△	REVISIONS	DATE	BY

DESIGNED J. JUN
DRAWN B. PURGANAN
CHECKED Y. HO
APPROVED H. LONGFELLOW

ONE INCH AT FULL SCALE. IF NOT, SCALE ACCORDINGLY
FILE NAME BL1521075P13T02WP-01
JOB No. 554-1521-075
DATE NOVEMBER 2011

YAMMIE Y. HO
STATE OF WASHINGTON
40829
REGISTERED PROFESSIONAL ENGINEER

Parametrix
ENGINEERING . PLANNING . ENVIRONMENTAL SCIENCES
411 108TH AVENUE N.E., SUITE 1800
BELLEVUE, WASHINGTON 98004
T. 425.458.6200 F. 425.458.6363
www.parametrix.com

PROJECT NAME
EAST LAKE SAMMAMISH
MASTER PLAN TRAIL, ISSAQUAH SEGMENT
GILMAN BLVD TO ISSAQUAH CITY LIMITS

WALL PROFILES

DRAWING NO.
68 OF 99
WP9

LAYOUT: WP9 PATH: U:\Bell\Projects\Clients\1521-King Cnty\554-1521-075-ELST\99Svcs\CADD\Phase 13\Task 02\Dwg\ PLOTTED BY: purgabut DATE: Wednesday, November 23, 2011 11:01:52 AM

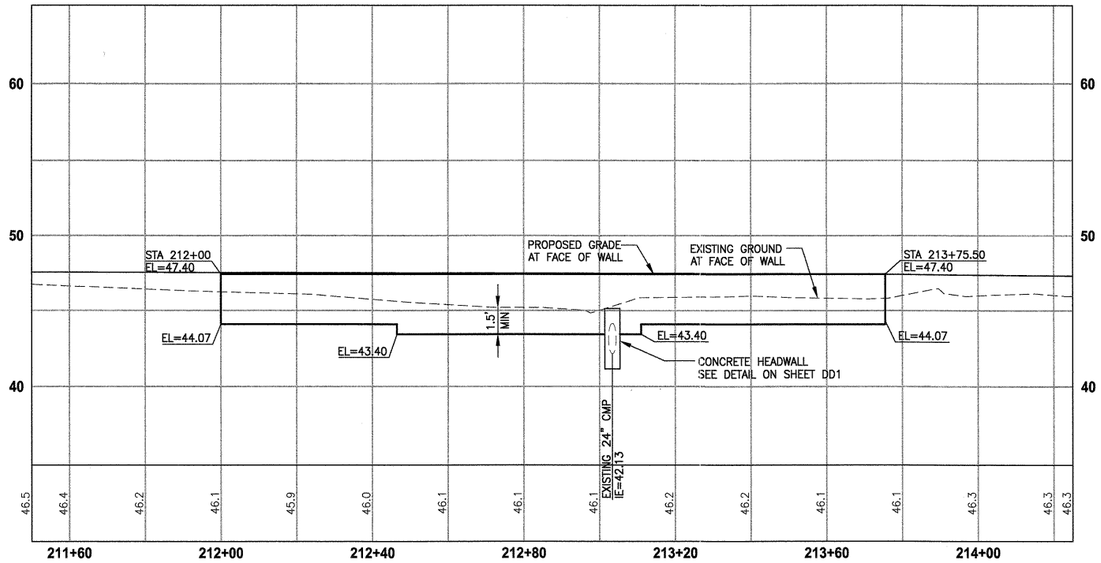

RIGHT STRUCTURAL EARTH WALL

WALL #24 (FILL) A-LINE

HORIZ: 1"=20'
VERT: 1"=5'

APPROVED
DEC 02 2011
PUBLIC WORKS ENG.
CITY OF ISSAQUAH

	REVISIONS	DATE	BY

DESIGNED J. JUN
DRAWN B. PURGANAN
CHECKED Y. HO
APPROVED H. LONGFELLOW

ONE INCH AT FULL SCALE.
IF NOT, SCALE ACCORDINGLY

FILE NAME BL1521075P13T02WP-01
JOB No. 554-1521-075
DATE NOVEMBER 2011

YAMMIE Y. HO
STATE OF WASHINGTON
40829
REGISTERED
PROFESSIONAL ENGINEER
11-23-11

Parametrix
ENGINEERING . PLANNING . ENVIRONMENTAL SCIENCES
411 108TH AVENUE N.E., SUITE 1800
BELLEVUE, WASHINGTON 98004
T. 425.458.6200 F. 425.458.6363
www.parametrix.com

PROJECT NAME
EAST LAKE SAMMAMISH
MASTER PLAN TRAIL, ISSAQUAH SEGMENT
GILMAN BLVD TO ISSAQUAH CITY LIMITS

WALL PROFILES

DRAWING NO.
69 OF 99

WP10

LAYOUT: WP10 PATH: U:\Bell\Projects\Clients\1521-King Cnty\554-1521-075-ELST\99Svcs\CADD\Phase 13\Task 02\Dwg\ PLOTTED BY: purgobut DATE: Wednesday, November 23, 2011 11:02:44 AM

WALL NO. 8 SOLDIER PILE LAYOUT

STATION	TOP OF PILE ELEV	BOT OF LAG. ELEV.	# OF LAGGING	PILE TIP ELEV	PILE LENGTH	DETAIL
147+50.00	53.20	51.30	2.00	43.20	10.00	
147+60.00	53.20	51.30	2.00	43.20	10.00	
147+70.00	53.20	51.30	2.00	43.20	10.00	
147+80.00	53.20	51.30	2.00	43.20	10.00	
147+90.00	53.20	51.30	2.00	43.20	10.00	
148+00.00	53.20	51.30	2.00	43.20	10.00	
148+10.00	53.20	51.08	2.25	43.20	10.00	1/S2
148+20.00	52.98	51.08	2.00	42.98	10.00	
148+30.00	52.98	50.13	3.00	39.98	13.00	
148+40.00	52.98	50.13	3.00	39.98	13.00	
148+50.00	52.98	50.13	3.00	39.98	13.00	
148+60.00	52.98	50.13	3.00	39.98	13.00	
148+70.00	52.98	50.13	3.00	39.98	13.00	1/S2
148+80.00	52.76	50.86	2.00	42.76	10.00	
148+90.00	52.76	49.91	3.00	39.76	13.00	
149+00.00	52.76	49.91	3.00	39.76	13.00	
149+10.00	52.76	49.91	3.00	39.76	13.00	
149+20.00	52.76	49.91	3.00	39.76	13.00	
149+30.00	52.76	49.91	3.00	39.76	13.00	
149+40.00	52.76	49.91	3.00	39.76	13.00	
149+50.00	52.76	49.91	3.00	39.76	13.00	
149+60.00	52.76	49.91	3.00	39.76	13.00	
149+70.00	52.76	49.69	3.25	39.76	13.00	1/S2
149+80.00	52.54	49.69	3.00	39.54	13.00	
149+90.00	52.54	49.69	3.00	39.54	13.00	
150+00.00	52.54	49.69	3.00	39.54	13.00	
150+10.00	52.54	49.69	3.00	39.54	13.00	
150+20.00	52.54	49.69	3.00	39.54	13.00	
150+30.00	52.54	49.69	3.00	39.54	13.00	
150+40.00	52.54	49.69	3.00	39.54	13.00	
150+50.00	52.54	49.69	3.00	39.54	13.00	
150+60.00	52.54	49.69	3.00	39.54	13.00	
150+70.00	52.54	49.69	3.00	39.54	13.00	
150+80.00	52.54	49.69	3.00	39.54	13.00	
150+90.00	52.54	49.69	3.00	39.54	13.00	
151+00.00	52.54	50.64	2.00	42.54	10.00	
151+10.00	52.54	50.64	2.00	42.54	10.00	
151+20.00	52.54	50.64	2.00	42.54	10.00	
151+30.00	52.54	50.64	2.00	42.54	10.00	
151+40.00	52.54	50.64	2.00	42.54	10.00	
151+50.00	52.54	50.64	2.00	42.54	10.00	
151+60.00	52.54	50.64	2.00	42.54	10.00	
151+70.00	52.54	50.64	2.00	42.54	10.00	
151+80.00	52.54	50.64	2.00	42.54	10.00	
151+90.00	52.54	50.42	2.25	42.54	10.00	1/S2
152+00.00	52.32	50.42	2.00	42.32	10.00	
152+10.00	52.32	50.42	2.00	42.32	10.00	
152+20.00	52.32	50.42	2.00	42.32	10.00	
152+30.00	52.32	50.42	2.00	42.32	10.00	
152+40.00	52.32	50.42	2.00	42.32	10.00	
152+50.00	52.32	50.42	2.00	42.32	10.00	
152+60.00	52.32	50.42	2.00	42.32	10.00	
152+70.00	52.32	50.20	2.25	42.32	10.00	1/S2
152+80.00	52.10	50.20	2.00	42.10	10.00	
152+90.00	52.10	50.20	2.00	42.10	10.00	
153+00.00	52.10	50.20	2.00	42.10	10.00	
153+10.00	52.10	50.20	2.00	42.10	10.00	
153+20.00	52.10	50.20	2.00	42.10	10.00	

WALL NO. 8 SOLDIER PILE LAYOUT CONT.

STATION	TOP OF PILE ELEV	BOT OF LAG. ELEV.	# OF LAGGING	PILE TIP ELEV	PILE LENGTH	DETAIL
153+30.00	52.10	50.20	2.00	42.10	10.00	1/S2
153+40.00	51.88	49.98	2.00	41.88	10.00	
153+50.00	51.88	49.98	2.00	41.88	10.00	
153+60.00	51.88	49.98	2.00	41.88	10.00	
153+70.00	51.88	49.98	2.00	41.88	10.00	
153+80.00	51.88	49.98	2.00	41.88	10.00	
153+90.00	51.88	49.76	2.25	41.88	10.00	1/S2
154+00.00	51.66	49.76	2.00	41.66	10.00	
154+10.00	51.66	49.76	2.00	41.66	10.00	
154+20.00	51.66	49.76	2.00	41.66	10.00	
154+30.00	51.66	49.54	2.25	41.66	10.00	1/S2
154+40.00	51.44	49.54	2.00	41.44	10.00	
154+50.00	51.44	49.54	2.00	41.44	10.00	
154+60.00	51.44	49.54	2.00	41.44	10.00	
154+70.00	51.44	48.59	3.00	38.44	13.00	
154+80.00	51.44	48.59	3.00	38.44	13.00	
154+90.00	51.44	48.37	3.25	38.44	13.00	1/S2
155+00.00	51.22	48.37	3.00	38.22	13.00	
155+10.00	51.22	49.32	2.00	41.22	10.00	
155+20.00	51.22	49.32	2.00	41.22	10.00	
155+30.00	51.22	49.32	2.00	41.22	10.00	
155+40.00	51.22	49.32	2.00	41.22	10.00	
155+50.00	51.22	49.10	2.25	41.22	10.00	1/S2
155+60.00	51.00	49.10	2.00	41.00	10.00	
155+70.00	51.00	49.10	2.00	41.00	10.00	
155+80.00	51.00	49.10	2.00	41.00	10.00	
155+90.00	51.00	49.10	2.00	41.00	10.00	
156+00.00	51.00	49.10	2.00	41.00	10.00	

WALL NO. 9 SOLDIER PILE LAYOUT

STATION	TOP OF PILE ELEV	BOT OF LAG. ELEV.	# OF LAGGING	PILE TIP ELEV	PILE LENGTH	DETAIL
158+25.00	50.61	48.71	2.00	40.61	10.00	
158+35.00	50.61	48.71	2.00	40.61	10.00	
158+45.00	50.61	48.71	2.00	40.61	10.00	
158+55.00	50.61	48.71	2.00	40.61	10.00	
158+65.00	50.61	48.71	2.00	40.61	10.00	
158+75.00	50.61	48.71	2.00	40.61	10.00	
158+85.00	50.83	48.71	2.25	40.83	10.00	1/S2
158+95.00	50.83	48.93	2.00	40.83	10.00	
159+05.00	50.83	48.93	2.00	40.83	10.00	
159+15.00	50.83	48.93	2.00	40.83	10.00	
159+25.00	50.83	48.93	2.00	40.83	10.00	
159+35.00	50.83	48.93	2.00	40.83	10.00	
159+45.00	50.83	48.93	2.00	40.83	10.00	1/S3 PIPE LOCATION
159+55.93	50.83	48.93	2.00	40.83	10.00	1/S3 PIPE LOCATION
159+65.00	50.83	48.93	2.00	40.83	10.00	1/S3 PIPE LOCATION
159+75.00	50.83	48.93	2.00	40.83	10.00	
159+85.00	51.05	48.20	3.00	38.05	13.00	1/S2
159+95.00	51.05	47.24	4.00	35.05	16.00	
160+05.00	51.05	47.24	4.00	35.05	16.00	
160+15.00	51.05	47.24	4.00	35.05	16.00	
160+25.00	51.05	47.24	4.00	35.05	16.00	
160+35.00	51.27	47.24	4.25	35.27	16.00	1/S2
160+45.00	51.27	48.42	3.00	38.27	13.00	
160+55.00	51.27	49.37	2.00	41.27	10.00	
160+65.00	51.27	49.37	2.00	41.27	10.00	
160+75.00	51.27	49.37	2.00	41.27	10.00	
160+85.00	51.49	48.64	3.00	38.49	13.00	1/S2
160+95.00	51.49	48.64	3.00	38.49	13.00	
161+05.00	51.49	48.64	3.00	38.49	13.00	
161+15.00	51.49	48.64	3.00	38.49	13.00	
161+25.00	51.71	48.64	3.25	38.71	13.00	1/S2
161+35.00	51.71	48.86	3.00	38.71	13.00	
161+45.00	51.71	48.86	3.00	38.71	13.00	
161+55.00	51.71	48.86	3.00	38.71	13.00	
161+65.00	51.93	48.86	3.25	38.93	13.00	1/S2
161+75.00	51.93	49.08	3.00	38.93	13.00	
161+85.00	51.93	49.08	3.00	38.93	13.00	
161+95.00	51.93	49.08	3.00	38.93	13.00	
162+05.00	52.15	49.08	3.25	39.15	13.00	1/S2
162+15.00	52.15	49.30	3.00	39.15	13.00	
162+25.00	52.15	49.30	3.00	39.15	13.00	
162+35.00	52.15	49.30	3.00	39.15	13.00	
162+45.00	52.37	49.30	3.25	39.37	13.00	1/S2
162+55.00	52.37	49.52	3.00	39.37	13.00	
162+65.00	52.37	49.52	3.00	39.37	13.00	
162+75.00	52.37	49.52	3.00	39.37	13.00	
162+85.00	52.37	49.52	3.00	39.37	13.00	
162+95.00	52.37	49.52	3.00	39.37	13.00	
163+05.00	52.37	49.52	3.00	39.37	13.00	
163+15.00	52.37	49.52	3.00	39.37	13.00	
163+25.00	52.37	48.56	4.00	36.37	16.00	
163+35.00	52.37	48.56	4.00	36.37	16.00	
163+44.00	52.37	48.56	4.00	36.37	16.00	2/S3 PIPE LOCATION
163+54.00	52.37	48.56	4.00	36.37	16.00	2/S3 PIPE LOCATION
163+64.00	52.37	48.56	4.00	36.37	16.00	2/S3 PIPE LOCATION
163+75.00	52.37	50.47	2.00	42.37	10.00	

CONSTRUCTION NOTES:

1. PILINGS DRIVEN NEXT TO EXISTING PIPING ARE IDENTIFIED IN THE DETAIL COLUMN AS "PIPE LOCATION". CONTRACTOR TO VERIFY PIPE LOCATION PRIOR TO DRIVING PILES AT THESE LOCATIONS. IF CONFLICT EXIST BETWEEN EXISTING PIPES AND NEW PILINGS, THE ENGINEER SHALL BE CONTACTED IMMEDIATELY.
2. IT IS ANTICIPATED THAT THE PILES WILL NOT REACH REFUSAL PRIOR TO DESIGN TIP ELEVATION. ONCE PILINGS REACH THE TIP ELEVATION THE CONTRACTOR IS TO STOP DRIVING. HOWEVER, PILINGS DRIVEN TO REFUSAL PRIOR TO REACHING DESIGNED TIP ELEVATION SHALL BE SET AND CUT TO DESIGNED TOP OF PILE ELEVATION.

ROBERT H. MURRAY
STATE OF WASHINGTON
14069
STRUCTURAL ENGINEER
PROFESSIONAL ENGINEER
11/23/11

△	REVISIONS	DATE	BY

DESIGNED J. MERTH
DRAWN A. VALENCIA
CHECKED B. MURRAY
APPROVED H. LONGFELLOW

ONE INCH AT FULL SCALE. IF NOT, SCALE ACCORDINGLY
FILE NAME SU1521075P13T02WP-12
JOB No. 554-1521-075
DATE NOVEMBER 2011

Parametrix
ENGINEERING . PLANNING . ENVIRONMENTAL SCIENCES
411 108TH AVENUE N.E., SUITE 1800
BELLEVUE, WASHINGTON 98004
T. 425.458.6200 F. 425.458.6363
www.parametrix.com

PROJECT NAME
EAST LAKE SAMMAMISH
MASTER PLAN TRAIL, ISSAQUAH SEGMENT
GILMAN BLVD TO ISSAQUAH CITY LIMITS

SOLDIER PILE WALL NO. 8 AND 9 LAYOUT TABLE

DRAWING NO.
70 OF 99
WP11

DATE: Nov 28, 2011 - 3:09pm
PLOTTED BY: purgabut LAYOUT: WP11
IMAGES: RM-Sig_11-23-1
XREFS: SU1521075P13T02CS-DE | XBL1521075P13T02C-TB

WALL NO.10 SOLDIER PILE LAYOUT

STATION	TOP OF PILE ELEV	BOT OF LAG. ELEV.	# OF LAGGING	PILE TIP ELEV	PILE LENGTH	DETAIL
165+34.00	51.88	49.98	2.00	41.88	10.00	
165+44.00	51.88	49.03	3.00	38.88	13.00	
165+54.00	51.88	49.03	3.00	38.88	13.00	
165+64.00	51.88	49.03	3.00	38.88	13.00	
165+74.00	51.88	49.03	3.00	38.88	13.00	
165+84.00	51.88	49.03	3.00	38.88	13.00	
165+94.00	51.88	49.03	3.00	38.88	13.00	
166+04.00	51.88	49.03	3.00	38.88	13.00	
166+14.00	51.88	48.81	3.25	38.88	13.00	1/S2
166+24.00	51.66	48.81	3.00	38.66	13.00	
166+34.00	51.66	48.81	3.00	38.66	13.00	
166+44.00	51.66	48.81	3.00	38.66	13.00	
166+54.00	51.66	48.81	3.00	38.66	13.00	
166+64.00	51.66	48.81	3.00	38.66	13.00	
166+74.00	51.66	48.59	3.25	38.66	13.00	1/S2
166+84.00	51.44	48.59	3.00	38.44	13.00	
166+94.00	51.44	48.59	3.00	38.44	13.00	
167+04.00	51.44	48.59	3.00	38.44	13.00	
167+14.00	51.44	48.59	3.00	38.44	13.00	
167+24.00	51.44	48.59	3.00	38.44	13.00	
167+34.00	51.44	48.37	3.25	38.44	13.00	1/S2
167+44.00	51.22	48.37	3.00	38.22	13.00	
167+54.00	51.22	48.37	3.00	38.22	13.00	
167+64.00	51.22	48.37	3.00	38.22	13.00	
167+74.00	51.22	48.37	3.00	38.22	13.00	
167+84.00	51.22	48.37	3.00	38.22	13.00	
167+94.00	51.22	48.15	3.25	38.22	13.00	1/S2
168+04.00	51.00	48.15	3.00	38.00	13.00	
168+14.00	51.00	48.15	3.00	38.00	13.00	
168+24.00	51.00	48.15	3.00	38.00	13.00	
168+34.00	51.00	48.15	3.00	38.00	13.00	
168+44.00	51.00	48.15	3.00	38.00	13.00	
168+54.00	51.00	48.15	3.00	38.00	13.00	1/S2
168+64.00	50.78	48.88	2.00	40.78	10.00	
168+74.00	50.78	48.88	2.00	40.78	10.00	
168+84.00	50.78	48.88	2.00	40.78	10.00	
168+94.00	50.78	47.93	3.00	37.78	13.00	
169+04.00	50.78	47.93	3.00	37.78	13.00	
169+14.00	50.78	47.71	3.25	37.78	13.00	1/S2
169+24.00	50.56	47.71	3.00	37.56	13.00	
169+34.00	50.56	47.71	3.00	37.56	13.00	
169+44.00	50.56	48.66	2.00	40.56	10.00	
169+54.00	50.56	48.66	2.00	40.56	10.00	
169+64.00	50.56	48.66	2.00	40.56	10.00	
169+74.00	50.56	48.44	2.25	40.56	10.00	1/S2
169+84.00	50.34	48.44	2.00	40.34	10.00	
169+94.00	50.34	48.44	2.00	40.34	10.00	
170+04.00	50.34	48.44	2.00	40.34	10.00	
170+14.00	50.34	48.44	2.00	40.34	10.00	3/S3 PIPE LOCATION
170+24.00	50.34	48.44	2.00	40.34	10.00	3/S3 PIPE LOCATION
170+34.00	50.34	48.44	2.00	40.34	10.00	3/S3 PIPE LOCATION
170+44.00	50.34	48.44	3.25	37.34	13.00	1/S2

WALL NO.11 SOLDIER PILE LAYOUT

STATION	TOP OF PILE ELEV	BOT OF LAG. ELEV.	# OF LAGGING	PILE TIP ELEV	PILE LENGTH	DETAIL
165+00.00	52.37	48.56	4.00	36.37	16.00	
165+10.00	52.37	47.60	5.00	36.37	16.00	
165+20.00	52.37	47.60	5.00	36.37	16.00	
165+30.00	52.37	47.60	5.00	36.37	16.00	
165+40.00	52.37	49.52	3.00	39.37	13.00	
165+50.00	52.37	50.47	2.00	42.37	10.00	
165+60.00	52.37	49.52	3.00	39.37	13.00	
165+70.00	52.37	49.52	3.00	39.37	13.00	
165+80.00	52.37	49.30	3.25	39.37	13.00	1/S2
165+90.00	52.15	49.30	3.00	39.15	13.00	
166+00.00	52.15	49.30	3.00	39.15	13.00	
166+10.00	52.15	49.30	3.00	39.15	13.00	
166+20.00	52.15	49.30	3.00	39.15	13.00	
166+30.00	52.15	49.30	3.00	39.15	13.00	
166+40.00	52.15	49.08	3.25	39.15	13.00	1/S2
166+50.00	51.93	49.08	3.00	38.93	13.00	
166+60.00	51.93	49.08	3.00	38.93	13.00	
166+70.00	51.93	49.08	3.00	38.93	13.00	
166+80.00	51.93	49.08	3.00	38.93	13.00	
166+90.00	51.93	49.08	3.00	38.93	13.00	
167+00.00	51.93	48.86	3.25	38.93	13.00	1/S2
167+10.00	51.71	48.86	3.00	38.71	13.00	
167+20.00	51.71	48.86	3.00	38.71	13.00	
167+30.00	51.71	48.86	3.00	38.71	13.00	
167+40.00	51.71	48.86	3.00	38.71	13.00	
167+50.00	51.71	48.86	3.00	38.71	13.00	
167+60.00	51.71	48.64	3.25	38.71	13.00	1/S2
167+70.00	51.49	48.64	3.00	38.49	13.00	
167+80.00	51.49	48.64	3.00	38.49	13.00	
167+90.00	51.49	48.64	3.00	38.49	13.00	
168+00.00	51.49	48.64	3.00	38.49	13.00	
168+10.00	51.49	48.64	3.00	38.49	13.00	
168+20.00	51.49	48.42	3.25	38.49	13.00	1/S2
168+30.00	51.27	48.42	3.00	38.27	13.00	
168+40.00	51.27	48.42	3.00	38.27	13.00	
168+50.00	51.27	48.42	3.00	38.27	13.00	
168+60.00	51.27	48.42	3.00	38.27	13.00	
168+70.00	51.27	48.42	3.00	38.27	13.00	
168+80.00	51.27	48.20	3.25	38.27	13.00	1/S2
168+90.00	51.05	48.20	3.00	38.05	13.00	
169+00.00	51.05	48.20	3.00	38.05	13.00	
169+10.00	51.05	48.20	3.00	38.05	13.00	
169+20.00	51.05	48.20	3.00	38.05	13.00	
169+30.00	51.05	48.20	3.00	38.05	13.00	
169+40.00	51.05	47.98	3.25	38.05	13.00	1/S2
169+50.00	50.83	47.02	4.00	34.83	16.00	
169+60.00	50.83	47.02	4.00	34.83	16.00	
169+70.00	50.83	47.02	4.00	34.83	16.00	
169+80.00	50.83	47.02	4.00	34.83	16.00	
169+90.00	50.83	47.02	4.00	34.83	16.00	4/S3 PIPE LOCATION
169+98.50	50.83	47.98	3.00	37.83	13.00	4/S3 PIPE LOCATION
170+10.00	50.83	47.98	3.00	37.83	13.00	4/S3 PIPE LOCATION
170+20.00	50.83	47.98	3.00	37.83	13.00	

WALL NO.12 SOLDIER PILE LAYOUT

STATION	TOP OF PILE ELEV	BOT OF LAG. ELEV.	# OF LAGGING	PILE TIP ELEV	PILE LENGTH	DETAIL
170+53.33	50.22	47.37	3.00	37.22	13.00	
170+62.67	50.22	47.15	3.25	37.22	13.00	1/S2
170+72.00	50.00	47.15	3.00	37.00	13.00	
170+81.33	50.00	47.15	3.00	37.00	13.00	
170+90.67	50.00	47.15	3.00	37.00	13.00	
171+00.00	49.78	47.88	3.25	36.78	13.00	1/S2
171+10.00	49.78	47.88	3.00	36.78	13.00	
171+20.00	49.78	47.88	2.00	39.78	10.00	
171+30.00	49.78	47.88	2.00	39.78	10.00	
171+40.00	49.78	47.88	2.00	39.78	10.00	
171+50.00	49.78	47.88	2.00	39.78	10.00	
171+60.00	49.78	46.93	3.00	36.78	13.00	
171+70.00	49.78	46.93	3.00	36.78	13.00	
171+80.00	49.78	46.93	3.00	36.78	13.00	1/S2
171+90.00	49.56	47.66	2.00	39.56	10.00	
172+00.00	49.56	47.66	2.00	39.56	10.00	
172+10.00	49.56	46.71	3.00	36.56	13.00	
172+20.00	49.56	46.71	3.00	36.56	13.00	
172+30.00	49.56	46.71	3.00	36.56	13.00	
172+40.00	49.56	46.71	3.00	36.56	13.00	
172+50.00	49.56	46.71	3.00	36.56	13.00	
172+60.00	49.56	46.71	3.00	36.56	13.00	
172+70.00	49.56	46.71	3.00	36.56	13.00	
172+80.00	49.78	46.71	3.25	36.78	13.00	1/S2
172+90.00	49.78	46.93	3.00	36.78	13.00	
173+00.00	49.78	46.93	3.00	36.78	13.00	
173+10.00	49.78	46.93	3.00	36.78	13.00	
173+20.00	49.78	45.97	4.00	33.78	16.00	
173+25.00	49.78	45.97	4.00	33.78	16.00	
173+30.00	49.78	45.97	4.00	33.78	16.00	
173+35.00	49.78	45.97	4.00	33.78	16.00	
173+40.00	50	45.97	4.25	34.00	16.00	1/S2
173+45.00	50	46.19	4.00	34.00	16.00	
173+50.00	50	46.19	4.00	34.00	16.00	
173+55.00	50	46.19	4.00	34.00	16.00	
173+60.00	50	46.19	4.00	34.00	16.00	
173+65.00	50	46.19	4.00	34.00	16.00	
173+70.00	50	46.19	4.00	34.00	16.00	
173+75.00	50	46.19	4.00	34.00	16.00	
173+80.00	50	46.19	4.00	34.00	16.00	
173+85.00	50	46.19	4.00	34.00	16.00	
173+90.00	50	46.19	4.00	34.00	16.00	
174+00.00	50	47.15	3.00	37.00	13.00	

WALL NO.13 SOLDIER PILE LAYOUT

STATION	TOP OF PILE ELEV	BOT OF LAG. ELEV.	# OF LAGGING	PILE TIP ELEV	PILE LENGTH	DETAIL
171+10.00	50.10	48.20	2.00	40.10	10.00	
171+20.00	50.10	47.25	3.00	37.10	13.00	
171+30.00	50.10	47.25	3.00	37.10	13.00	
171+40.00	50.10	47.25	3.00	37.10	13.00	
171+50.00	50.10	46.29	4.00	34.10	16.00	
171+55.00	50.10	46.29	4.00	34.10	16.00	
171+60.00	50.10	46.29	4.00	34.10	16.00	
171+65.00	50.10	46.29	4.00	34.10	16.00	
171+70.00	50.10	46.29	4.00	34.10	16.00	
171+80.00	50.10	47.25	3.00	37.10	13.00	
171+90.00	50.10	47.03	3.25	37.10	13.00	1/S2
172+00.00	49.88	47.03	3.00	36.88	13.00	
172+10.00	49.88	47.03	3.00	36.88	13.00	
172+20.00	49.88	47.03	3.00	36.88	13.00	
172+30.00	49.88	47.03	3.00	36.88	13.00	
172+40.00	49.88	47.03	3.00	36.88	13.00	
172+50.00	50.10	47.03	3.25	37.10	13.00	1/S2
172+60.00	50.10	47.25	3.00	37.10	13.00	
172+70.00	50.10	47.25	3.00	37.10	13.00	
172+80.00	50.10	47.25	3.00	37.10	13.00	
172+90.00	50.10	47.25	3.00	37.10	13.00	
173+00.00	50.10	47.25	3.00	37.10	13.00	
173+10.00	50.10	48.20	2.00	40.10	10.00	
173+20.00	50.10	48.20	2.00	40.10	10.00	
173+30.00	50.32	48.20	2.25	40.32	10.00	1/S2
173+40.00	50.32	48.42	2.00	40.32	10.00	
173+50.00	50.32	48.42	2.00	40.32	10.00	

REVISIONS	DATE	BY

DESIGNED J. MERTH
DRAWN A. VALENCIA
CHECKED B. MURRAY
APPROVED H. LONGFELLOW

ONE INCH AT FULL SCALE. IF NOT, SCALE ACCORDINGLY
FILE NAME SU1521075P13T02WP-12
JOB No. 554-1521-075
DATE NOVEMBER 2011

ROBERT H. MURRAY
STATE OF WASHINGTON
14089
STRUCTURAL ENGINEER
PROFESSIONAL ENGINEER
11/23/11

Parametrix
ENGINEERING . PLANNING . ENVIRONMENTAL SCIENCES
411 108TH AVENUE N.E., SUITE 1800
BELLEVUE, WASHINGTON 98004
T. 425.458.6200 F. 425.458.6363
www.parametrix.com

PROJECT NAME
EAST LAKE SAMMAMISH
MASTER PLAN TRAIL, ISSAQUAH SEGMENT
GILMAN BLVD TO ISSAQUAH CITY LIMITS

SOLDIER PILE WALL NO. 10, 11,12, AND 13 LAYOUT TABLE

DATE: Nov 28, 2011 - 3:26pm PLOTTED BY: nurgabut LAYOUT: WP12
IMAGES: RM-Sig_11-23-1 | XREF'S: SU1521075P13T02CS-DE | XBL1521075P13T02C_TB

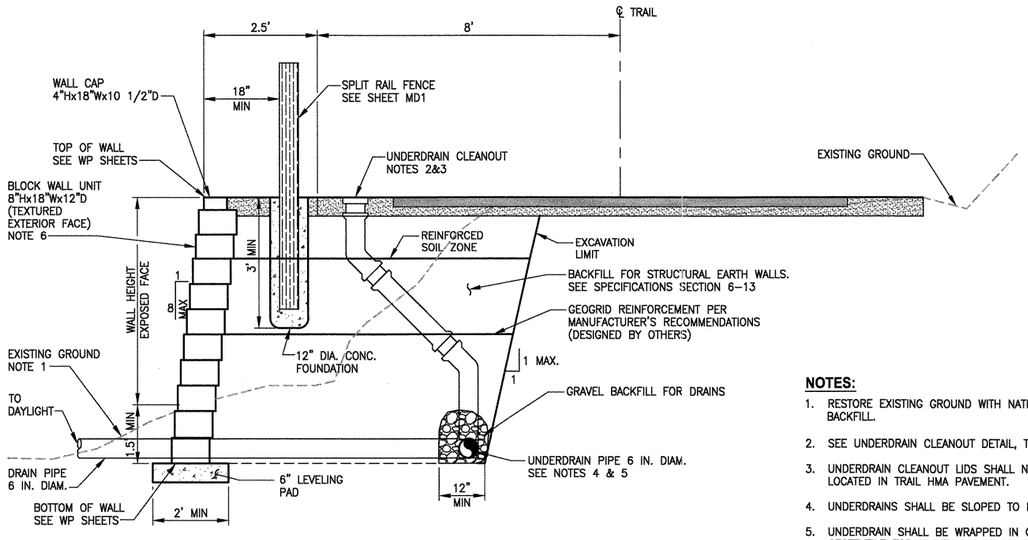

STRUCTURAL EARTH WALL (FOR FILL WALLS)

DETAIL 1

NO SCALE

NOTES:

1. RESTORE EXISTING GROUND WITH NATIVE SOIL BACKFILL.
2. SEE UNDERDRAIN CLEANOUT DETAIL, THIS SHEET.
3. UNDERDRAIN CLEANOUT LIDS SHALL NOT BE LOCATED IN TRAIL HMA PAVEMENT.
4. UNDERDRAINS SHALL BE SLOPED TO DRAIN.
5. UNDERDRAIN SHALL BE WRAPPED IN CONSTRUCTION GEOTEXTILE FOR UNDERGROUND DRAINAGE.
6. FILL BLOCK UNITS WITH UNIT DRAINAGE FILL. SEE SPECIAL PROVISIONS FOR WALL DESIGN REQUIREMENTS. ALL CONSTRUCTION MUST CONFORM TO MANUFACTURER'S SPECIFIC REQUIREMENTS.

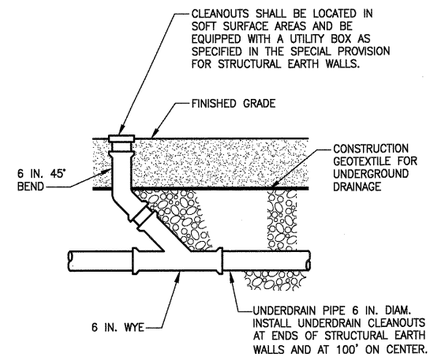

UNDERDRAIN CLEANOUT

DETAIL 2

NO SCALE

WALL SCHEDULE

WALL #	BEGIN STATION	END STATION	SIDE	EXPOSED WALL HEIGHT RANGE	NOTE
WALL 1	103+00.00	104+26.00	RT	1.5'-3.5'	STRUCTURAL EARTH WALL
WALL 2	105+28.00	105+99.50	RT	0.5'-2.5'	STRUCTURAL EARTH WALL
WALL 3	108+41.00	108+66.50	RT	0.0'-3.0'	STRUCTURAL EARTH WALL
WALL 4	108+38.50	108+99.50	LT	0.5'-3.0'	STRUCTURAL EARTH WALL
WALL 5	123+50.00	123+98.00	RT	1.0'-2.0'	STRUCTURAL EARTH WALL
WALL 6	134+25.00	136+26.00	LT	0.5'-2.0'	STRUCTURAL EARTH WALL
WALL 7	135+50.00	136+25.00	RT	1.5'-2.0'	STRUCTURAL EARTH WALL
WALL 8	147+50.00	156+00.00	LT	0.5'-2.0'	SOLDIER PILE WALL
WALL 9	158+25.00	163+75.00	LT	0.5'-3.0'	SOLDIER PILE WALL
WALL 10	165+34.00	170+44.00	LT	0.5'-3.0'	SOLDIER PILE WALL
WALL 11	165+00.00	170+20.00	RT	0.5'-3.7'	SOLDIER PILE WALL
WALL 12	170+44.00	174+00.00	LT	0.5'-3.0'	SOLDIER PILE WALL
WALL 13	171+10.00	173+50.00	RT	0.5'-2.8'	SOLDIER PILE WALL
WALL 14	178+37.00	180+26.00	RT	0.5'-3.1'	STRUCTURAL EARTH WALL
WALL 15	178+40.00	179+25.50	LT	0.5'-2.0'	STRUCTURAL EARTH WALL
WALL 16	180+24.50	185+26.00	LT	1.0'-3.5'	STRUCTURAL EARTH WALL
WALL 17	182+64.50	187+43.00	RT	1.0'-3.0'	STRUCTURAL EARTH WALL
WALL 18	187+89.50	195+86.50	RT	1.0'-3.0'	STRUCTURAL EARTH WALL
WALL 19	203+25.00	204+51.00	LT	1.5'-2.0'	STRUCTURAL EARTH WALL
WALL 20	203+25.00	204+51.00	RT	1.5'-3.7'	STRUCTURAL EARTH WALL
WALL 21	204+94.00	206+98.00	LT	0'-3.0'	STRUCTURAL EARTH WALL
WALL 22	204+95.50	205+25.50	RT	1.5'-4.0'	STRUCTURAL EARTH WALL
WALL 23	213+00.00	215+98.00	LT	1.5'-4.0'	STRUCTURAL EARTH WALL
WALL 24	212+00.00	213+75.50	RT	1.5'-2.5'	STRUCTURAL EARTH WALL

DESIGN LOADS FOR FILL WALLS

LIVELOAD	100 psf
DEADLOAD	NONE

APPROVED
DEC 02 2011
PUBLIC WORKS ENG.
CITY OF ISSAQUAH

△	REVISIONS	DATE	BY

DESIGNED J. JUN
DRAWN B. PURGANAN
CHECKED Y. HO
APPROVED H. LONGFELLOW

ONE INCH AT FULL SCALE. IF NOT, SCALE ACCORDINGLY
FILE NAME BL1521075P13T02WD-01
JOB No. 554-1521-075
DATE NOVEMBER 2011

YAMMIE Y. HO
STATE OF WASHINGTON
40829
11-23-11
REGISTERED PROFESSIONAL ENGINEER

Parametrix
ENGINEERING . PLANNING . ENVIRONMENTAL SCIENCES
411 108TH AVENUE N.E., SUITE 1800
BELLEVUE, WASHINGTON 98004
T. 425.458.6200 F. 425.458.6363
www.parametrix.com

PROJECT NAME
EAST LAKE SAMMAMISH
MASTER PLAN TRAIL, ISSAQUAH SEGMENT
GILMAN BLVD TO ISSAQUAH CITY LIMITS

STRUCTURAL EARTH WALL DETAILS AND SCHEDULE

DRAWING NO.
72 OF 99
WD1

LAYOUT: WD1 PATH: U:\Bell\Projects\Clients\1521-King Cnty\554-1521-075-ELST\99Svcs\CADD\Phase 13\Task 02\Dwg\ PLOTTED BY: purgabut DATE: Wednesday, November 23, 2011 11:07:30 AM

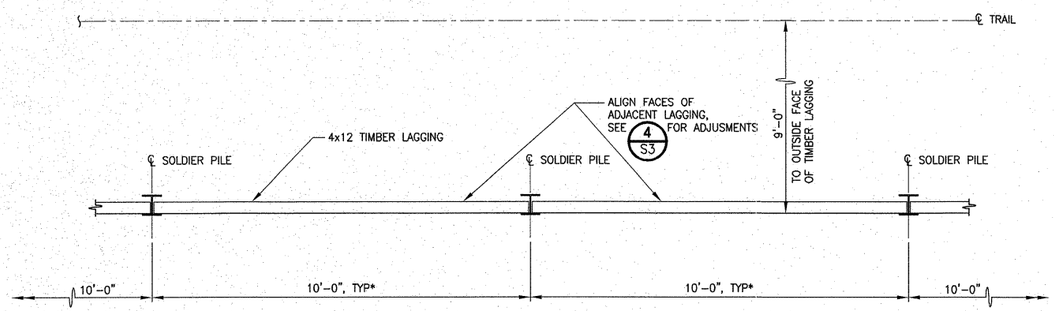

* EXCEPT AS NOTED

TYPICAL SOLDIER PILE WALL
PLAN
1/2"=1'-0"

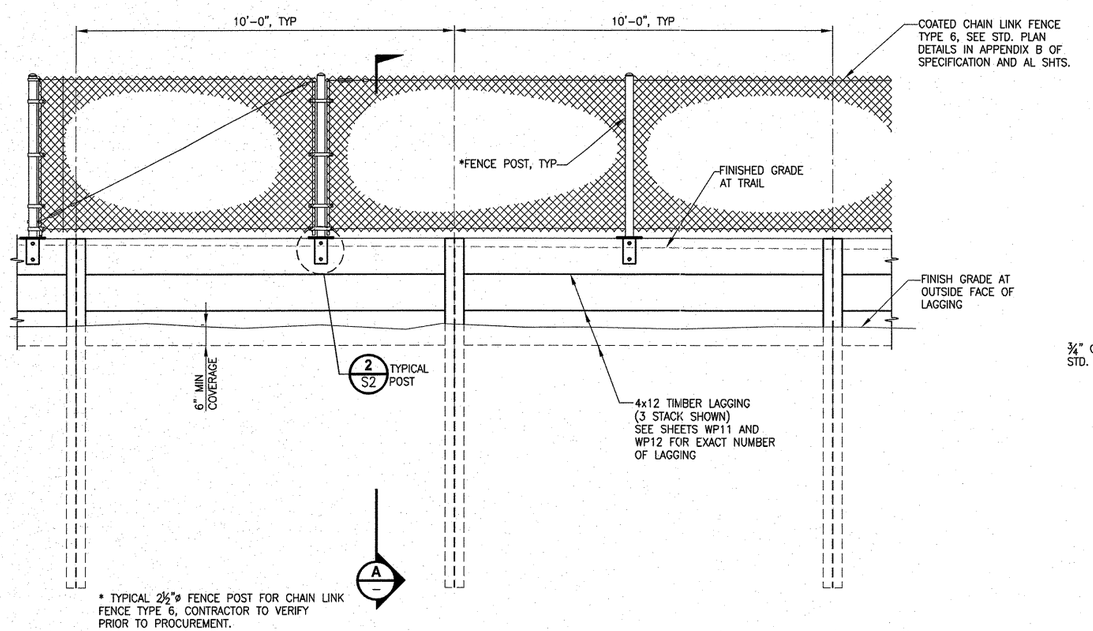

* TYPICAL 2½"ø FENCE POST FOR CHAIN LINK FENCE TYPE 6, CONTRACTOR TO VERIFY PRIOR TO PROCUREMENT.

TYPICAL SOLDIER WALL
ELEVATION
1/2"=1'-0"

STRUCTURAL NOTES:

1. THE CONTRACTOR SHALL FIELD VERIFY ALL DIMENSIONS PRIOR TO PROCEEDING WITH ANY WORK OR FABRICATION. NOTIFY THE ENGINEER OF ANY DISCREPANCY.
2. ALL MATERIALS AND WORKMANSHIP SHALL CONFORM TO THE REQUIREMENTS OF THE WASHINGTON STATE DEPARTMENT OF TRANSPORTATION STANDARD AND SPECIFICATION FOR ROAD, BRIDGE AND MUNICIPAL CONSTRUCTION, DATED 2010, AND AMENDMENTS.
3. THE SOLDIER PILE WALLS HAVE BEEN DESIGNED IN ACCORDANCE WITH THE RETAINING WALL PROVISIONS OF THE LATEST EDITION OF IBC AND THE RECOMMENDATIONS OF THE GEOTECHNICAL REPORT..
4. ALL STRUCTURAL STEEL SHALL BE ASTM A36 OR ASTM A992. GALVANIZING SHALL CONFORM TO ASTM 153.
5. ALL WOOD FOR THE TIMBER LAGGING SHALL BE DOUGLAS-FIR LARCH, GRADE #2 OR BETTER OR HEM-FIR #1. ALL WOOD SHALL BE TREATED IN ACCORDANCE TO AASHTO M133. AS SPECIFIED BY AASHTO M133, THE AMERICAN WOOD-PRESERVERS' ASSOCIATION (AWPA) STANDARDS SHALL GOVERN THE SPECIFICATIONS. ALL TIMBER LAGGING (4X12) SHALL BE DIMENSIONAL LUMBER. LAGGING SHALL BE PRE CUT PRIOR TO TREATMENT.
6. ALL NAILS, BOLTS, NUTS AND WASHERS (A36) SHALL BE HOT-DIP GALVANIZED.
7. ALL WELDING SHALL CONFORM TO AWS D1.1 WELDING CODE. MINIMUM SIZE WELDS 3/16" CONTINUOUS FILLET, UNLESS OTHERWISE NOTED.

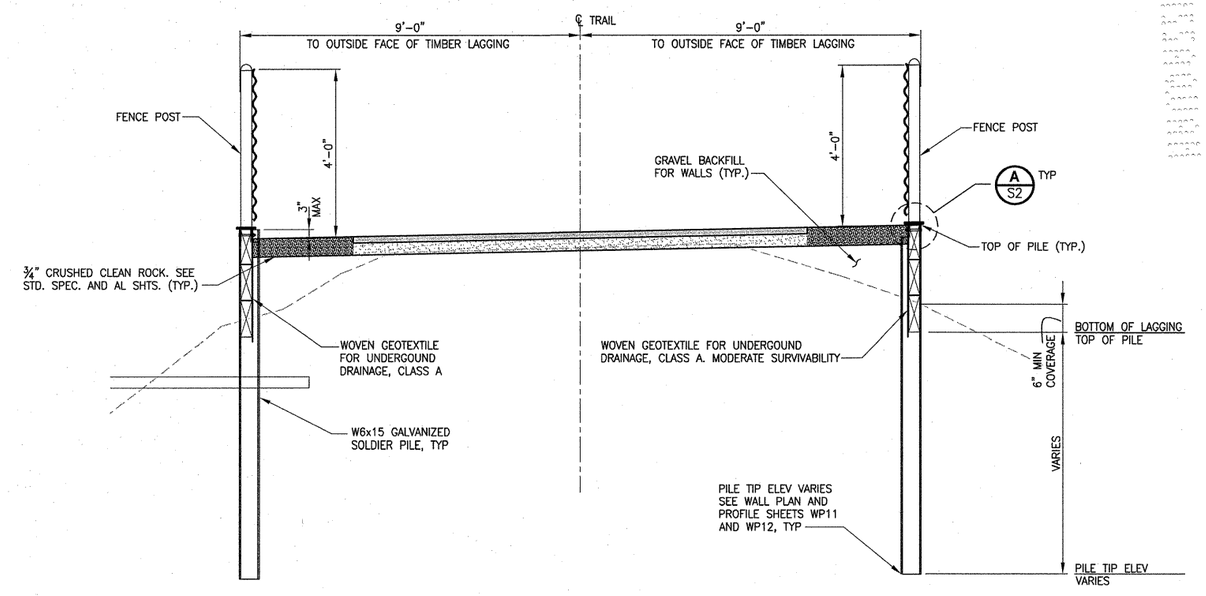

TYPICAL SOLDIER PILE WALL (STA 166+00 SHOWN)
SECTION A
1/2"=1'-0"

APPROVED
DEC 02 2011
PUBLIC WORKS ENG.
CITY OF ISSAQUAH

REVISIONS	DATE	BY

DESIGNED B. MURRAY
DRAWN A. VALENCIA
CHECKED Y. HO
APPROVED H. LONGFELLOW

ONE INCH AT FULL SCALE. IF NOT, SCALE ACCORDINGLY
FILE NAME SU1521075P13T02S-01new
JOB No. 554-1521-075
DATE NOVEMBER 2011

ROBERT H. MURRAY — STATE OF WASHINGTON — 14089 — STRUCTURAL ENGINEER — PROFESSIONAL ENGINEER — 11/23/11

Parametrix
ENGINEERING . PLANNING . ENVIRONMENTAL SCIENCES
411 108TH AVENUE N.E., SUITE 1800
BELLEVUE, WASHINGTON 98004
T. 425.458.6200 F. 425.458.6363
www.parametrix.com

PROJECT NAME
EAST LAKE SAMMAMISH
MASTER PLAN TRAIL, ISSAQUAH SEGMENT
GILMAN BLVD TO ISSAQUAH CITY LIMITS

SOLDIER PILE WALL TYPICAL PLAN AND ELEVATION

DRAWING NO. 73 OF 99
S1

DATE: Nov 23, 2011 – 1:58pm
PLOTTED BY: clarkehr LAYOUT: S1
IMAGES: hh-23 | hh-24
XREFS: XBL1521075P13T02C-TB | RHM-PE
XBL1521075P13T02CS-DE

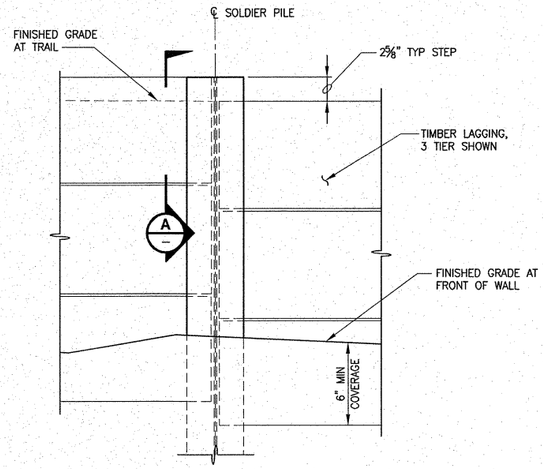

STEP AT WALL
DETAIL 1 (W12–W13)
1 1/2"=1'–0"

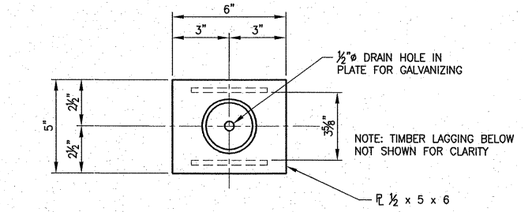

PLAN

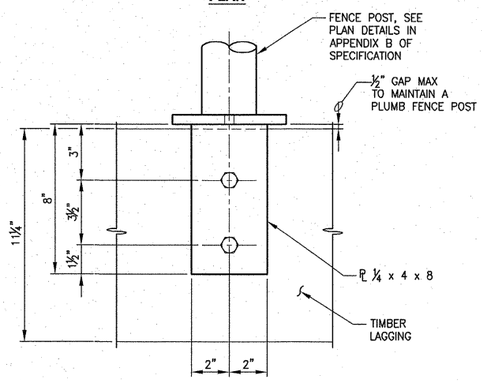

ELEVATION

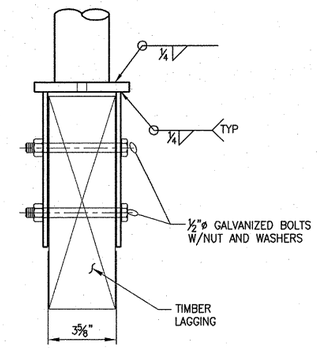

SECTION

TYPICAL FENCE POST AT WALL
DETAIL 2 (S1)
3"=1'–0"

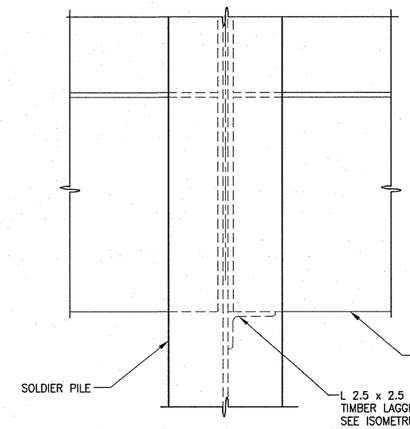

ELEVATION

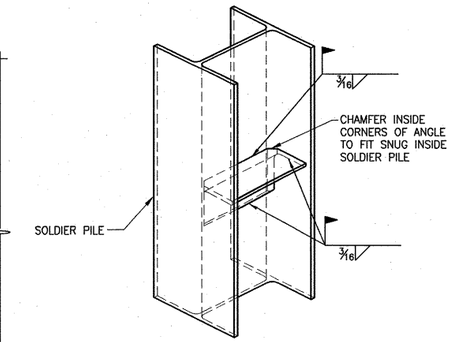

ISOMETRIC

LEDGER AT PIPES
DETAIL 3 (S3)
3"=1'–0"

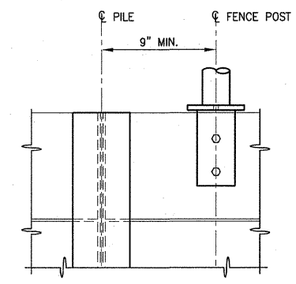

POST TO PILE MINIMUM CLEARANCE
DETAIL 5 (–)
1–1/2"=1'–0"

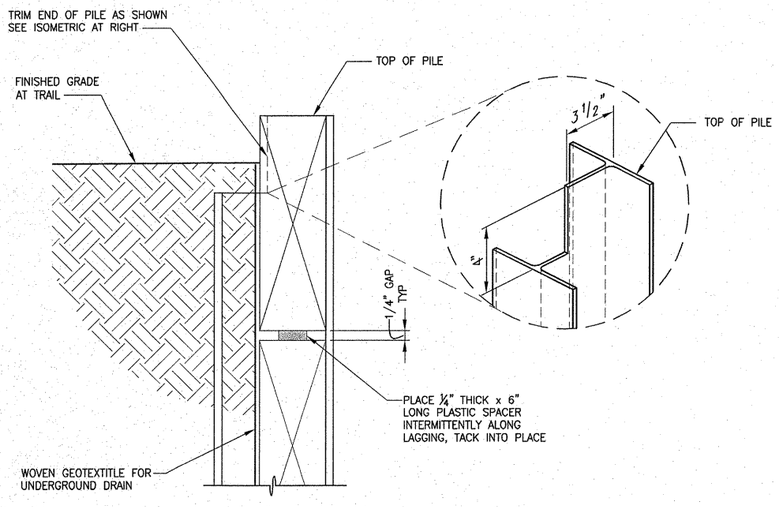

SECTION A (S1)
3"=1'–0"

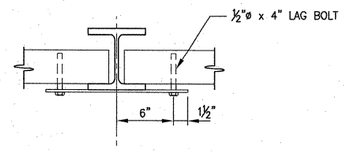

PLAN

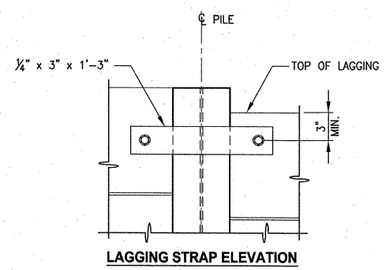

LAGGING STRAP ELEVATION
DETAIL 6 (S1)
1–1/2"=1'–0"

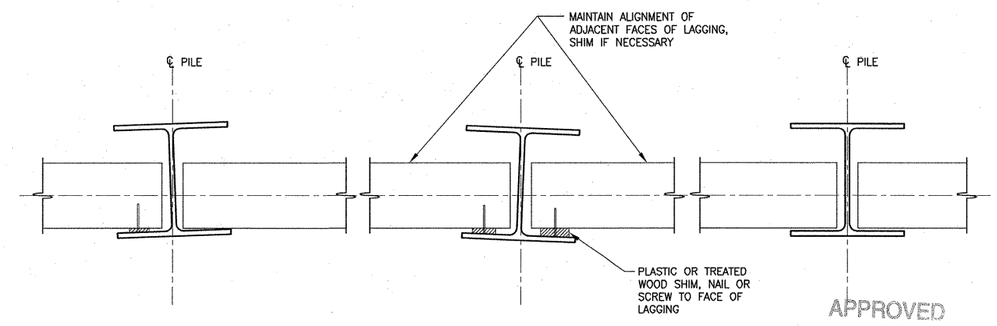

REQUIRED SHIM
DETAIL 4 (S1)
3"=1'–0"

APPROVED
DEC 02 2011
PUBLIC WORKS ENG.
CITY OF ISSAQUAH

ROBERT H. MURRAY
STATE OF WASHINGTON
14089
STRUCTURAL ENGINEER
PROFESSIONAL ENGINEER
11/23/11

REVISIONS	DATE	BY

DESIGNED B. MURRAY
DRAWN A. VALENCIA
CHECKED Y. HO
APPROVED H. LONGFELLOW

ONE INCH AT FULL SCALE. IF NOT, SCALE ACCORDINGLY
FILE NAME SU1521075P13T02S–01new
JOB No. 554–1521–075
DATE NOVEMBER 2011

Parametrix
ENGINEERING . PLANNING . ENVIRONMENTAL SCIENCES
411 108TH AVENUE N.E., SUITE 1800
BELLEVUE, WASHINGTON 98004
T. 425.458.6200 F. 425.458.6363
www.parametrix.com

PROJECT NAME
EAST LAKE SAMMAMISH
MASTER PLAN TRAIL, ISSAQUAH SEGMENT
GILMAN BLVD TO ISSAQUAH CITY LIMITS

SOLDIER PILE WALL DETAILS

DRAWING NO.
74 OF 99
S2

DATE: Nov 23, 2011 – 1:55pm
PLOTTED BY: clarkchr LAYOUT: S2
IMAGES: lh–23 | lh–24 |
XREF'S: XS1521075P13T02CS–DE | XBL1521075P13T02C–TB | RHM–PE

PORTIONS OF SECTIONS 16, 21 & 28, TWP 24 N., RGE. 6 E., W.M.

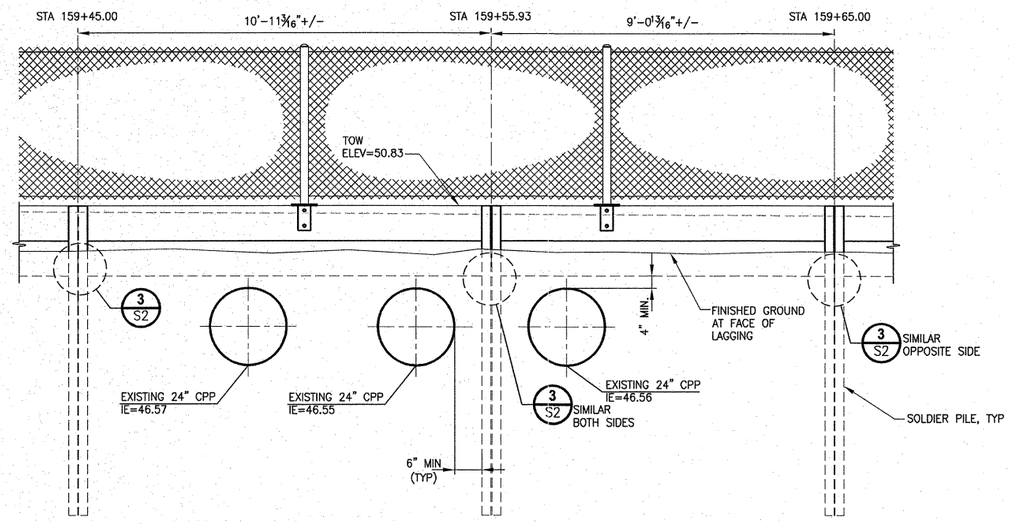

NOTE: CONTRACTOR TO VERIFY LOCATION OF EXISTING PIPES PRIOR TO DRIVING SOLDIER PILE

WALL 9 AT 3 PIPE CROSSING
DETAIL 1
1/2"=1'-0" WP3, WP11

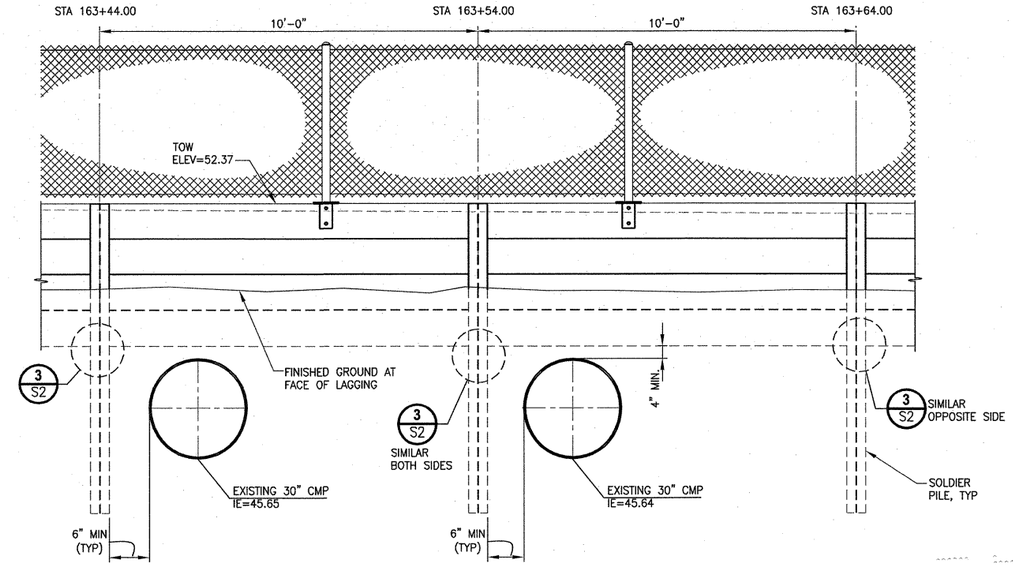

WALL 9 AT 2 PIPE CROSSING
DETAIL 2
1/2"=1'-0" WP3, WP11

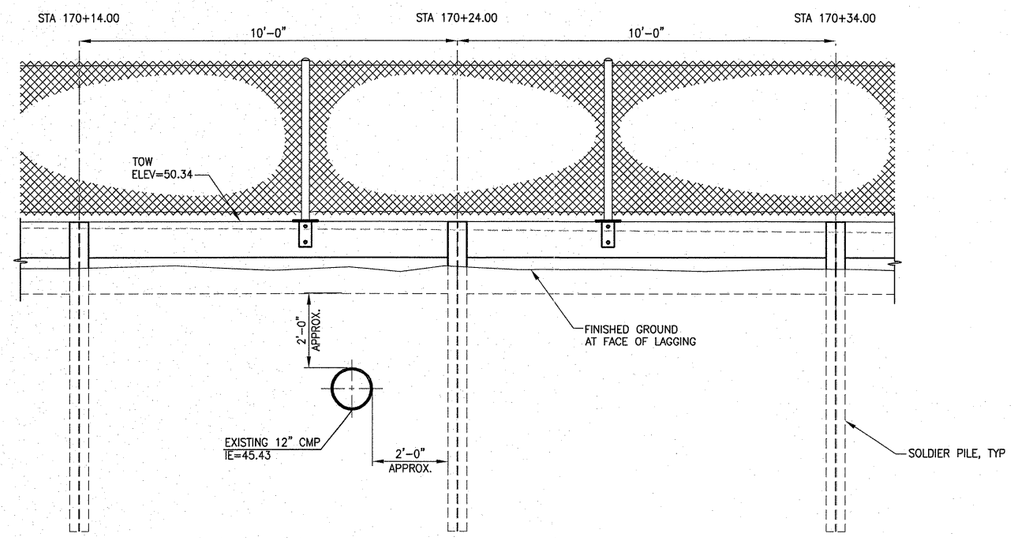

WALL 10 AT 1 PIPE CROSSING
DETAIL 3
1/2"=1'-0" WP4, WP12

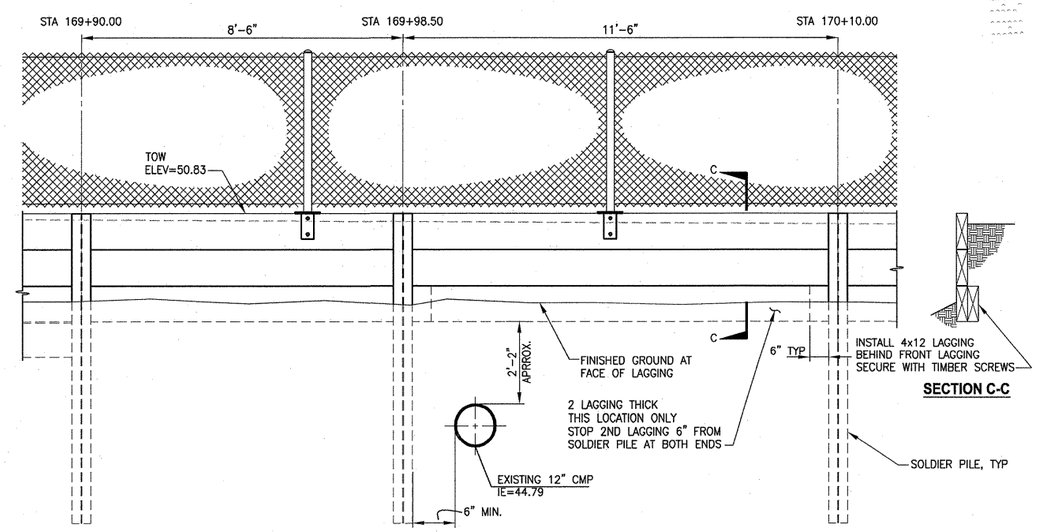

WALL 11 AT 1 PIPE CROSSING
DETAIL 4
1/2"=1'-0" WP4, WP12

APPROVED
DEC 02 2011
PUBLIC WORKS ENG.
CITY OF ISSAQUAH

△	REVISIONS	DATE	BY	
				DESIGNED B. MURRAY
				DRAWN A. VALENCIA
				CHECKED Y. HO
				APPROVED H. LONGFELLOW

ONE INCH AT FULL SCALE. IF NOT, SCALE ACCORDINGLY
FILE NAME SU1521075P13T02S-01nev
JOB No. 554-1521-075
DATE NOVEMBER 2011

ROBERT H. MURRAY
STATE OF WASHINGTON
14089
STRUCTURAL ENGINEER
PROFESSIONAL ENGINEER
11/23/11

Parametrix
ENGINEERING . PLANNING . ENVIRONMENTAL SCIENCES
411 108TH AVENUE N.E., SUITE 1800
BELLEVUE, WASHINGTON 98004
T. 425.458.6200 F. 425.458.6363
www.parametrix.com

PROJECT NAME
EAST LAKE SAMMAMISH
MASTER PLAN TRAIL, ISSAQUAH SEGMENT
GILMAN BLVD TO ISSAQUAH CITY LIMITS

SOLDIER PILE WALL
DETAILS AT EXISTING PIPES

DRAWING NO.
75 OF 99
S3

DATE: Nov 23, 2011 - 2:02pm
PLOTTED BY: clarkchr LAYOUT: S3
IMAGES: hh-23 | hh-24 |
XREF'S: XSU1521075P13T02CS-DE | XBL1521075P13T02C-TB | RHM-PE