Ravensdale Park Field Renovations

Ravensdale, WA

Permit Set

JANUARY 2011

Ravensdale Park Fund & King County Parks & Recreation Division

JONES JONES
ARCHITECTS
LANDSCAPE ARCHITECTS
PLANNERS
WWW.JONESANDJONES.COM

LEGAL DESCRIPTION FOR RAVENSDALE PARK

PARCEL NO. 252206-9012

27305 272ND AVE SE 98051

PARCEL OF LAND LYING WITHIN SW QTR SE QTR STR 25-22-06 & WITHIN NW QTR NE QTR STR 36-22-06 DAF: BEGINNING AT NE CORNER OF SAID SEC 36 (FROM WHICH N QTR CORNER OF SAID SECTION BEARS N88-07-07W 2606.11 FT) TH S42-44-57W 1846.11 FT TO POINT ON WLY LINE EXTENDED OF PROPERTY DESCRIBED UNDER RECORDING NO 3124710 (BEING INTERSECTION OF N LINE OF RIGHT OF WAY OF NORTHERN PACIFIC RWY WITH CENTERLINE OF 12TH ST AS SHOWN ON UNRECORDEDPLAT OF TOWN OF RAVENSDALE) TH N23-56-31W ALONG SAID WLY LINE 1550.94 FT TO POINT ON N LINE OF SAID SEC 36 & TPOB (FROM WHICH NE CORNER OF SAID SECTION BEARS S88-07-07E 1883.53 FT) TH RETRACING SAID LINE S23-56-31E 544.91 FT TH N88-07-07W 931.26 FT TO KING CO MAINTAINED ELY RIGHT OF WAY LINE OF 268TH AVE SE TH ALONG SAID MAINTAINED LINE N02-02-05E 490.50 FT TO POINT ON N LINE OF SAID SEC 36 TH CONTINUING ALONG SAID LINE N01-14-02E 785.97 FT ON LINE 30.00 FT ELY OF & PARALLEL TO NORTH-SOUTH CENTER SECTION LINE OF SAID SEC 25 TO POINT ON SLY RIGHT OF WAY LINE OF KENT- KANGLEY RD TH S55-07-38E 1319.83 FT ALONG SAID SLY RIGHT OF WAY LINE TO BEGINNING OF CURVE T LEFT TH ALONG SAID CURVE (DELTA EQUALS 14-50-41 WITH RADIUS OF 603.11 FT) DISTANCE OF 156.27 FT TO INTERSECTION WITH N LINE OF SAID SEC 36 TH N88-07-07W 546.11 FT ALONG SAID N LINE TO TPOB

PARCEL NO. 362206-9019

27132 SE RAVENSDALE WAY 98051

BEG NE COR OF SEC TH S 38-26-28 W 1846.11 FT TO PT ON NLY MGN OF N P R/W TH N 28-15-00 W TO NLY MGN OF CO RD & TRUE BEG TH CONTG N 28-15-00 W TO N LN OF SEC TH E ALG SD N LN N87-34-24E 539.22 FT TO W LN OF 272ND AVE SE TH SELY ALG SD RD TO N LN OF BLACK DIAMOND- RAVENSDALE RD & N 43-28-00 E FR TPOB TH S 43-28-00 W 478.14 FT M/L TO TPOB

PARCEL NO. 362206-9001

NO ADDRESS

PORTION OF NE QTR NE QTR STR 36-22-06 LYING ELY OF CENTERLINE OF 272ND AVE SE NLY OF CENTERLINE OF BLACK DIAMOND- RAVENSDALE ROAD AND WLY OF FOLLOWING DESCRIBED LINE: COMMENCING AT NE CORNER OF SAID SECTION 36 TH S86-47-15W ALONG N LINE THEREOF 449.99 FT TO TPOB TH S03-12-45W 446 FT MORE OR LESS TO CENTERLINE OF BLACK DIAMOND- RAVENSDALE ROAD AND TERMINUS OF LINE; EXC PORTION DAF: COMMENCING AT NE CORNER OF SAID SECTION 36 TH N88-58-02W ALONG N LINE OF SAID SECTION 1016.03 FT TH S01-01-58W 30.00 FT TO POINT ON SLY MARGIN OF SE 272ND ST AND TPOB TH S06-08-15W 340.00 FT TH N88-58-02W 124.20 FT TO CENTERLINE OF 272ND AVE SE AND BEGINNING OF CURVE CONCAVE TO WEST HAVING RADIUS OF 351.49 FT AND CENTRAL ANGLE OF 13-02-26 AND SUBTENDED BY CHORD THAT BEARS N19-41-43W 79.83 FT TH NLY AND NWLY ALONG SAID CURVE AND ROAD CENTERLINE 80.00 FT TH CONTINUING ALONG SAID ROAD CENTERLINE N26-12-55W TANGENT TO SAID CURVE 49.67 FT TO BEGINNING OF CURVE TANGENT TO SAID LINE TH NWLY AND NLY CONTINUING ALONG SAID ROAD CENTERLINE 65.19 FT ALONG CURVE CONCAVE TO EAST HAVING RADIUS OF 455.24 FT AND CENTRAL ANGLE OF 08-12-16 TH CONTINUING ALONG SAID ROAD CENTERLINE N18-00-39W TANGENT TO SAID CURVE 192.10 FT TO POINT ON SLY MARGIN OF SE 272ND ST SAID POINT BEING BEGINNING OF CURVE CONCAVE TO NORTH HAVING RADIUS POINT BEARING N16-25-38E AND RADIUS OF 603.14 FT TH ELY ALONG SAID CURVE AND SLY ROAD MARGIN 162.05 FT THRU CENTRAL ANGLE OF 15-23-40 TH S88-58-02E TANGENT TO SAID CURVE AND CONTINUING ALONG SAID SLY MARGIN 133.62 FT TO TPOB

TABLE OF CONTENTS

GENERAL
G01 Survey
G02 Survey
G03 Survey

CIVIL
C100 Drainage Details
C200 TESC Plan
C210 TESC Details

LANDSCAPE
L100 Park Context Plan
L110 West Site Plan
L111 Site Plan Enlargement
L501 Site and Planting Details

ATHLETIC FIELDS
F040 Field Demolition Plan
F110 Field Layout Plan
F120 Field Grading Plan
F130 Field Drainage Plan
F210 Field Drainage Details
F230 Field Backstop Details
F250 Fencing Details

DESIGN TEAM

Architects and Landscape Architects
Jones & Jones
Architects and Landscape Architects, Ltd.
105 South Main Street, Suite 300
Seattle, Washington 98104-3474
Tel. 206.624.5702
Fax 206.624.5923

Athletic Field Design
D.A. Hogan
119 1st Avenue South, Suite 100
Seattle WA 98104
Tel. 206.285.0400
Fax.

Civil Engineering
Herrera Environmental, Inc.
2200 Sixth Avenue, Suite 1100
Seattle, WA 98121
Tel. 206.441.9080
Fax.

TOPOGRAPHIC SURVEY
RAVENSDALE PARK
RAVENSDALE, WASHINGTON

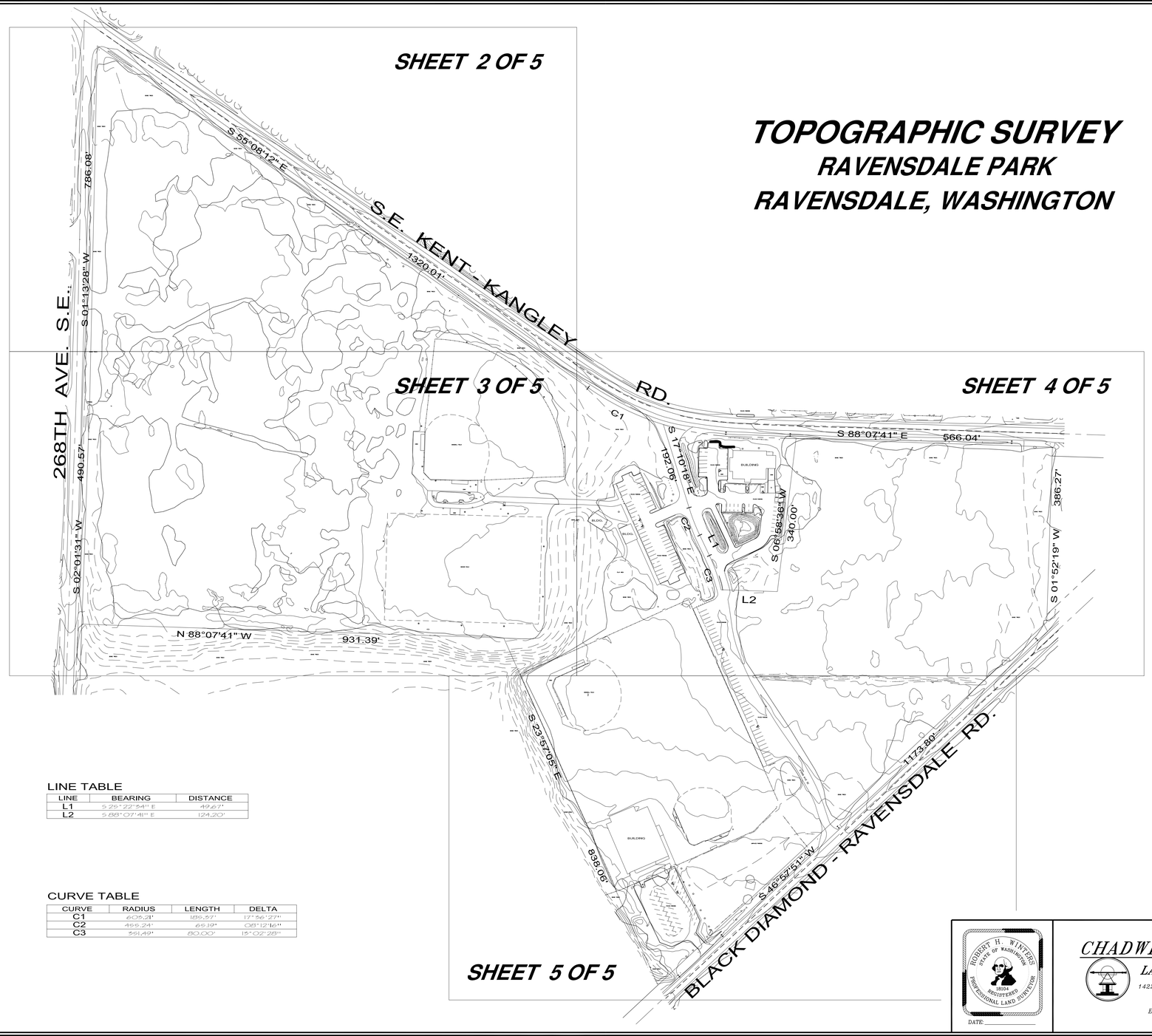

NORTH

LEGEND (TYPICAL FOR ALL SHEETS)

- STREET TREE \ LIMITS OF VEGETATION
- GAS METER
- WATER METER
- FIRE VALVE
- FIRE STANDPIPE
- TRAFFIC BOLLARD
- SIGN
- STORM CATCH BASIN
- UTILITY POLE
- WATER VALVE
- FIRE HYDRANT
- TRAFFIC SIGNAL
- UTILITY VAULT
- UTILITY MANHOLE
- LIGHT STANDARD
- LIGHT POST
- STORM CULVERT
- DOWN SPOUT

LINE TABLE

LINE	BEARING	DISTANCE
L1	S 29°22'54" E	49.67'
L2	S 88°07'41" E	124.20'

CURVE TABLE

CURVE	RADIUS	LENGTH	DELTA
C1	605.28'	185.57'	17°56'27"
C2	495.24'	69.19'	08°12'46"
C3	561.49'	80.00'	15°02'28"

SHEET 1 OF 5

ROBERT H. WINTERS
STATE OF WASHINGTON
18104
REGISTERED
PROFESSIONAL LAND SURVEYOR
DATE: _____

CHADWICK & WINTERS
LAND SURVEYING, INC.
1422 N.W. 85TH ST., SEATTLE, WA 98117
PHONE: (206) 297-0996
FAX: (206) 297-0997
E-MAIL: CWLANDSURVEY@QWEST.NET

PROJECT #: 09-3909

DRAWING: 09-3909A.DWG

CLIENT: RAVENSDALE PARK

Ravensdale Park

Ravensdale, Washington

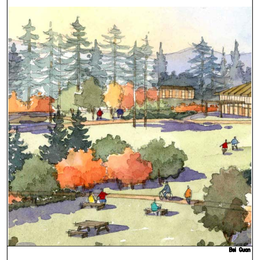

DATE: JANUARY 2011

SURVEY

SHEET NO.: G 01

MATCH LINE SEE SHEET 3 OF 5

SHEET 2 OF 5

HERBERT H. WINTERS
STATE OF WASHINGTON
18104
REGISTERED
PROFESSIONAL LAND SURVEYOR

DATE:

CHADWICK & WINTERS
LAND SURVEYING, INC.
1422 N.W. 85TH ST., SEATTLE, WA 98117
PHONE: (206) 297-0996
FAX: (206) 297-0997
E-MAIL: CWLANDSURVEY@QWEST.NET

PROJECT #: 09-3909

DRAWING: 09-3909B.DWG

CLIENT: RAVENSDALE PARK

Ravensdale Park

Ravensdale, Washington

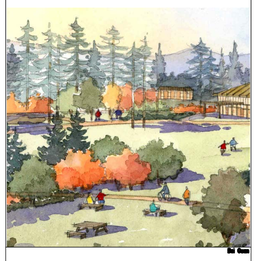

DATE: JANUARY 2011

SURVEY

SHEET NO.: G 02

MATCH LINE SEE SHEET 2 OF 5

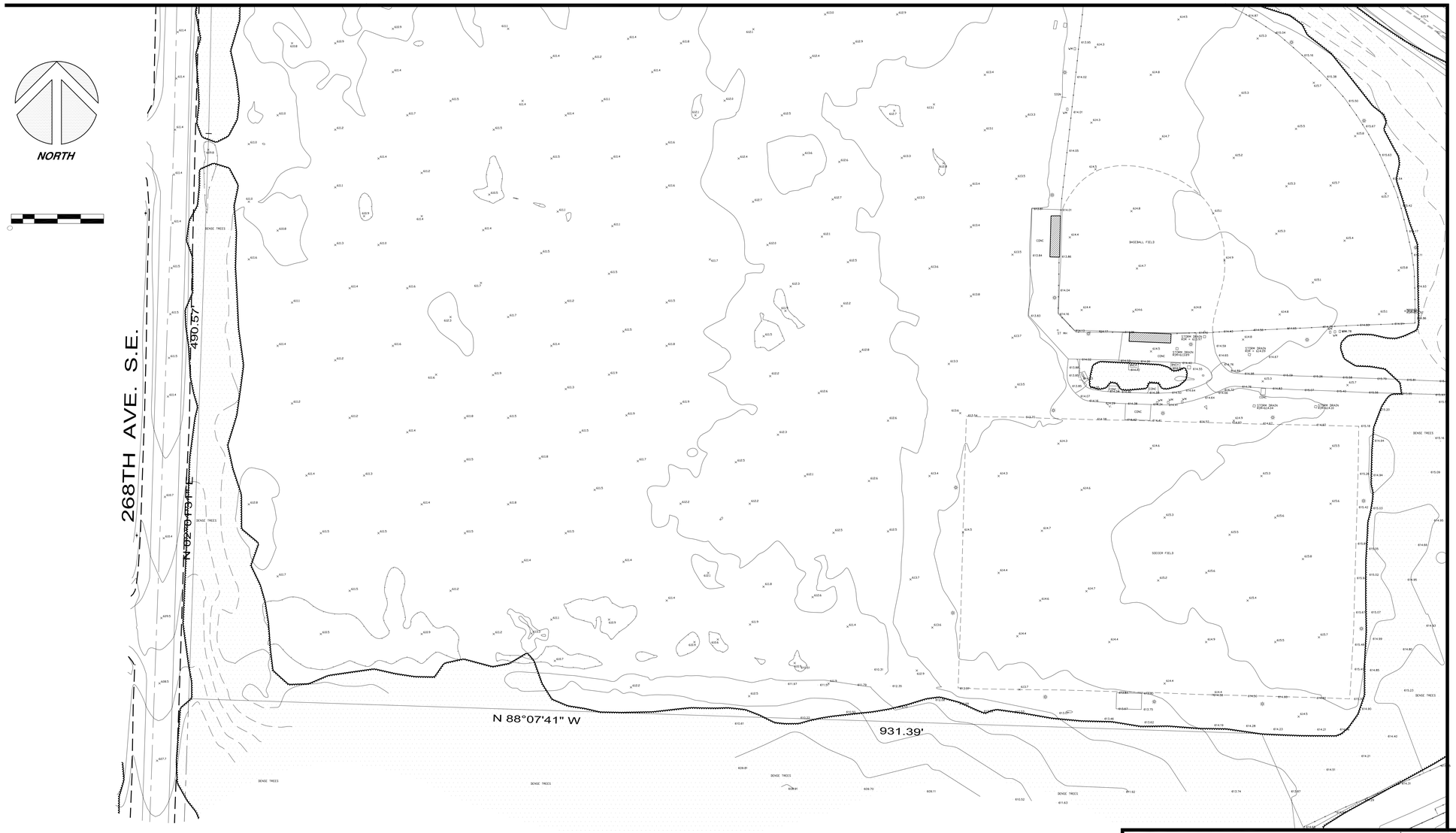

MATCH LINE SEE SHEET 5 OF 5

SHEET 3 OF 5

ROBERT H. WINTERS
STATE OF WASHINGTON
18104
REGISTERED
PROFESSIONAL LAND SURVEYOR

DATE:

CHADWICK & WINTERS
LAND SURVEYING, INC.
1422 N.W. 85TH ST., SEATTLE, WA 98117
PHONE: (206) 297-0996
FAX: (206) 297-0997
E-MAIL: CWLANDSURVEY@QWEST.NET

PROJECT #: 09-3909

DRAWING: 09-3909C.DWG

CLIENT: RAVENSDALE PARK

Ravensdale Park

Ravensdale, Washington

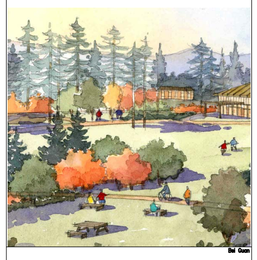

DATE: JANUARY 2011

SURVEY

SHEET NO.: G 03

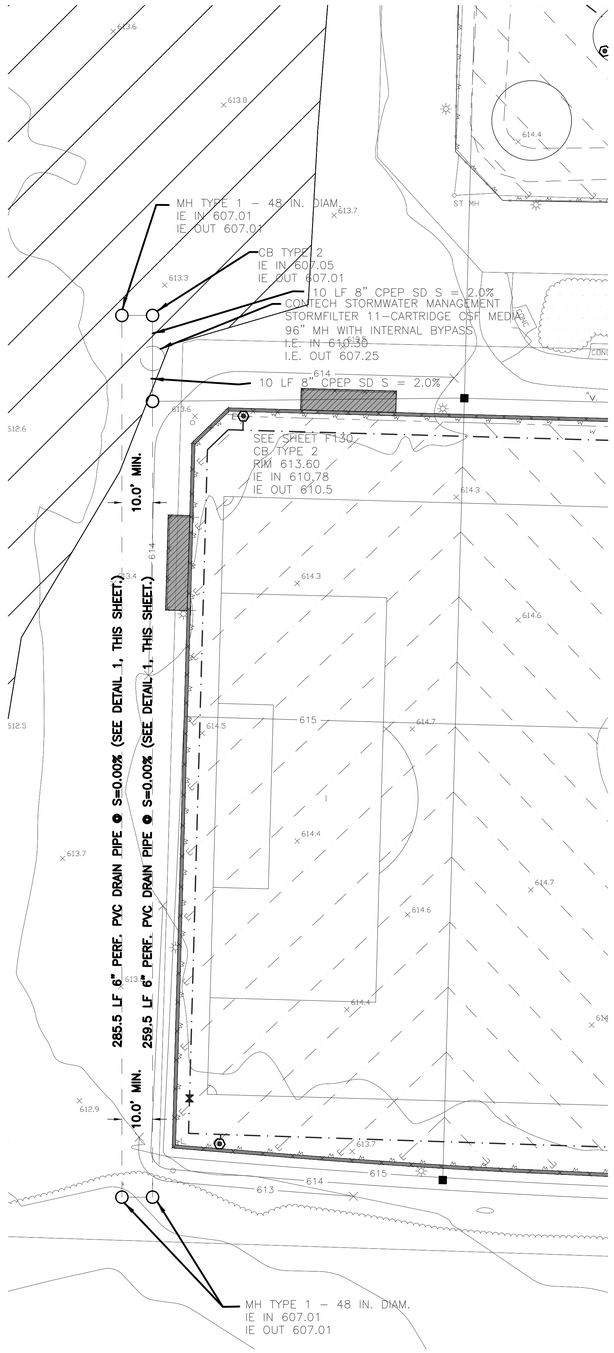

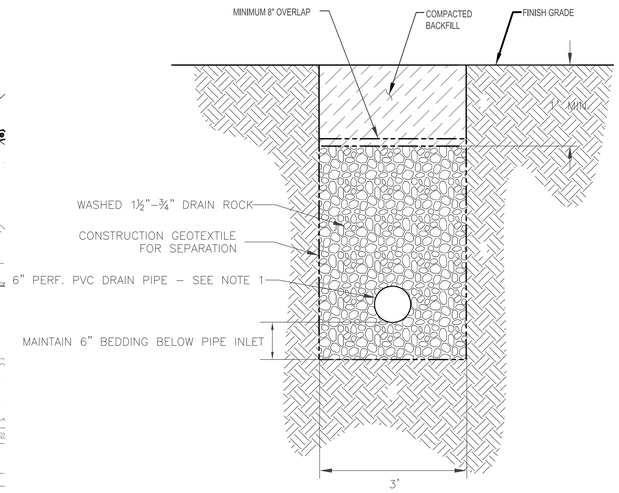

1 INFILTRATION TRENCH TYPICAL SECTION
NOT TO SCALE

DRAINAGE NOTES

1. 6" DRAIN PIPE SHALL BE PERFORATED PVC UNDERDRAIN PIPE PER WSDOT STD. SPEC. 9–05.2 (6).
2. CLEANOUT WYES PER DETAIL 7, SHEET F210, SHALL BE PROVIDED AT 50' INTERVALS.
3. DRAIN PIPE SHALL BE BEDDED AND INSTALLED PER WSDOT STANDARD SPECIFICATION 7–08.
4. TRENCHES SHALL COMPLY WITH OSHA AND WISHA REQUIREMENTS REGARDING WORKER SAFETY. THE CONTRACTOR SHALL PROVIDE AND INSTALL SHEETING AND SHORING AS NECESSARY FOR WORKER PROTECTION, EXISTING UTILITIES, AND OTHER PROPERTIES. SHEETING AND SHORING SHALL COMPLY WITH OSHA AND WISHA REQUIREMENTS. ALL SHEETING AND SHORING ABOVE THE PIPE SHALL BE REMOVED PRIOR TO BACKFILLING. REMOVAL OF THE SHEETING AND SHORING SHALL BE ACCOMPLISHED IN SUCH A MANNER THAT THERE WILL BE NO DAMAGE TO THE WORK OR TO THE OTHER PROPERTIES.
5. WASHED DRAIN ROCK SHALL BE WASHED ROCK PER WSDOT STD. SPEC. 9–03.12(5).

DRAINAGE LEGEND

- PERF. CPEP SUBSURFACE DRAINAGE COLLECTOR
- SOLID CPEP SUBSURFACE DRAINAGE COLLECTOR OR STORM DRAIN PIPE
- CATCH BASIN INLET (CBI) TYPE 1
- CATCH BASIN INLET (CBI) TYPE 2
- CLEANOUT

NORTH

Ravensdale Park

Ravensdale, Washington

JONES JONES
105 SOUTH MAIN ST
SUITE 300
SEATTLE WA 98104

Ravensdale Park Fund
&
King County
Parks and Recreation Div.
201 S. Jackson St.
Suite 700
Seattle, WA 98104

HERRERA ENVIRONMENTAL CONSULTANTS
2200 Sixth Avenue
Suite 1100
Seattle, Washington
98121-1820
206-441-9080
206-441-9108 FAX
http://www.herrerainc.com

PERMIT SET

DATE: JANUARY 2011

REVISIONS:

DRAINAGE DETAILS

SCALE: 1" = 20'-0"

FEET 0 5 10 20 40 60

DRAWN BY: AR
CHECKED BY: ML
JOB NO.: 08-03999-000

2-3-2011
SHEET NO.: C100

All drawings and written material appearing herein constitute the original and unpublished work of the architect and the same may not be duplicated, used, or disclosed without the written consent of the architect © Jones & Jones

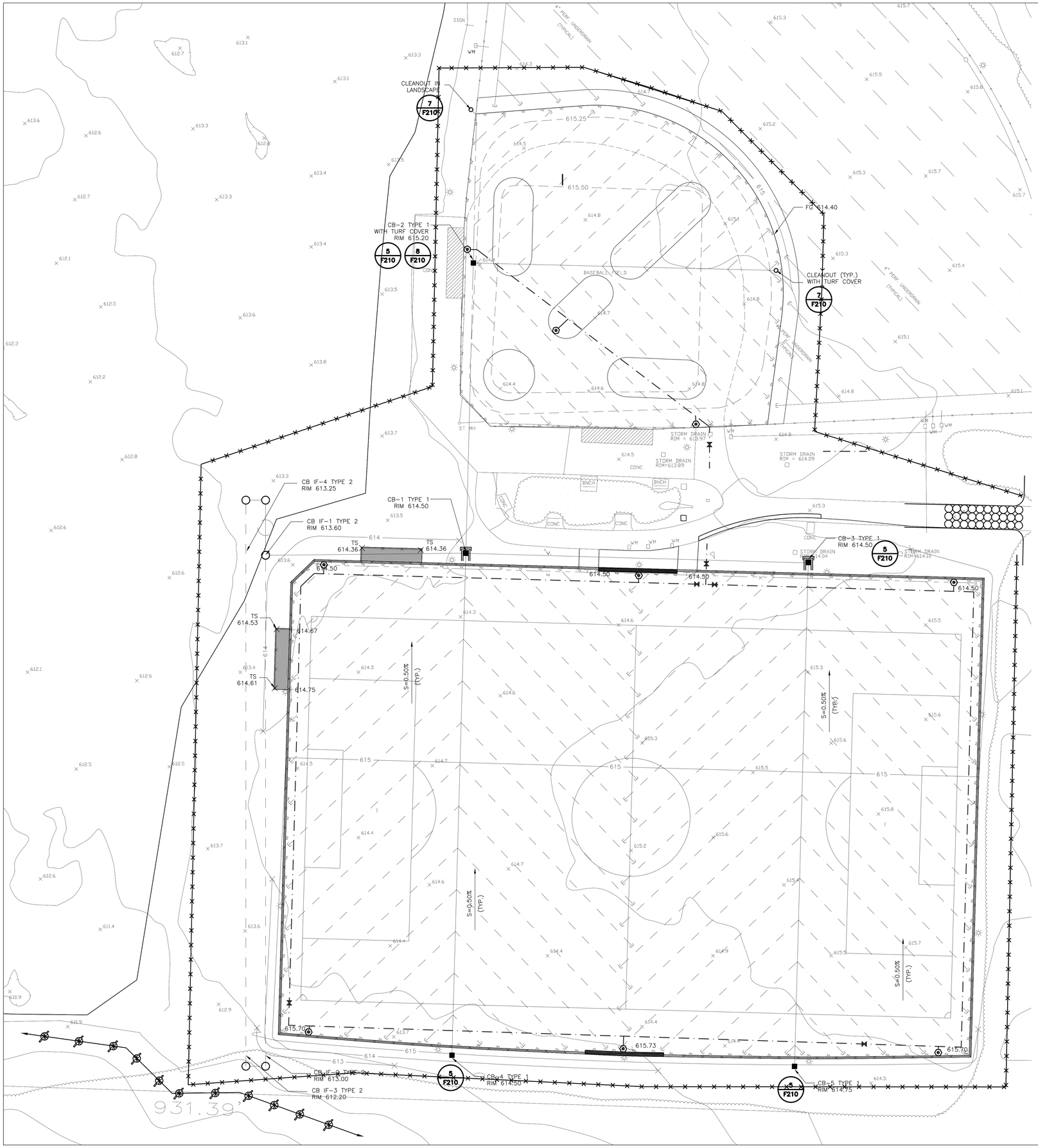

T.E.S.C. NOTES

1. APPROVAL OF THIS EROSION AND SEDIMENTATION CONTROL (ESC) PLAN DOES NOT CONSTITUTE AN APPROVAL OF PERMANENT ROAD OR DRAINAGE DESIGN (E.G., SIZE AND LOCATION OF ROADS, PIPES, RESTRICTORS, CHANNELS, RETENTION FACILITIES, UTILITIES, ETC.).

2. THE IMPLEMENTATION OF THESE ESC PLANS AND THE CONSTRUCTION, MAINTENANCE, REPLACEMENT, AND UPGRADING OF THESE ESC FACILITIES IS THE RESPONSIBILITY OF THE APPLICANT/ESC SUPERVISOR UNTIL ALL CONSTRUCTION IS APPROVED.

3. THE BOUNDARIES OF THE CLEARING LIMITS SHOWN ON THIS PLAN SHALL BE CLEARLY FLAGGED BY SURVEY TAPE OR FENCING, IF REQUIRED, PRIOR TO CONSTRUCTION (SWDM APPENDIX D). DURING THE CONSTRUCTION PERIOD, NO DISTURBANCE BEYOND THE CLEARING LIMITS SHALL BE PERMITTED. THE CLEARING LIMITS SHALL BE MAINTAINED BY THE APPLICANT/ESC SUPERVISOR FOR THE DURATION OF CONSTRUCTION.

4. STABILIZED CONSTRUCTION ENTRANCES SHALL BE INSTALLED AT THE BEGINNING OF CONSTRUCTION AND MAINTAINED FOR THE DURATION OF THE PROJECT. ADDITIONAL MEASURES, SUCH AS CONSTRUCTED WHEEL WASH SYSTEMS OR WASH PADS, MAY BE REQUIRED T ENSURE THAT ALL PAVED AREAS ARE KEPT CLEAN AND TRACK OUT TO ROAD RIGHT OF WAY DOES NOT OCCUR FOR THE DURATION OF THE PROJECT.

5. THE ESC FACILITIES SHOWN ON THIS PLAN MUST BE CONSTRUCTED PRIOR TO OR IN CONJUNCTION WITH ALL CLEARING AND GRADING SO AS TO ENSURE THAT THE TRANSPORT OF SEDIMENT TO SURFACE WATERS, DRAINAGE SYSTEMS, AND ADJACENT PROPERTIES IS MINIMIZED.

6. THE ESC FACILITIES SHOWN ON THIS PLAN ARE THE MINIMUM REQUIREMENTS FOR ANTICIPATED SITE CONDITIONS. DURING THE CONSTRUCTION PERIOD, THESE ESC FACILITIES SHALL BE UPGRADED AS NEEDED FOR UNEXPECTED STORM EVENTS AND MODIFIED TO ACCOUNT FOR CHANGING SITE CONDITIONS (E.G. ADDITIONAL COVER MEASURES, ADDITIONAL SUMP PUMPS, RELOCATION OF DITCHES AND SILT FENCES, PERIMETER PROTECTION ETC.) AS DIRECTED BY KING COUNTY.

7. THE ESC FACILITIES SHALL BE INSPECTED DAILY BY THE APPLICANT/ESC SUPERVISOR AND MAINTAINED TO ENSURE CONTINUED PROPER FUNCTIONING. WRITTEN RECORDS SHALL BE KEPT OF WEEKLY REVIEWS OF THE ESC FACILITIES.

8. ANY AREAS OF EXPOSED SOILS, INCLUDING ROADWAY EMBANKMENTS, THAT WILL NOT BE DISTURBED FOR TWO CONSECUTIVE DAYS DURING THE WET SEASON OR SEVEN DAYS DURING THE DRY SEASON SHALL BE IMMEDIATELY STABILIZED WITH THE APPROVED ESC METHODS (E.G., SEEDING, MULCHING, PLASTIC COVERING, ETC.).

9. ANY AREA NEEDING ESC MEASURES THAT DO NOT REQUIRE IMMEDIATE ATTENTION SHALL BE ADDRESSED WITHIN SEVEN (7) DAYS.

10. THE ESC FACILITIES ON INACTIVE SITES SHALL BE INSPECTED AND MAINTAINED A MINIMUM OF ONCE A MONTH DURING THE DRY SEASON, BI-MONTHLY DURING THE WET SEASON, OR WITHIN TWENTY FOUR (24) HOURS FOLLOWING A STORM EVENT.

11. AT NO TIME SHALL MORE THAN ONE (1) FOOT OF SEDIMENT BE ALLOWED TO ACCUMULATE WITHIN A CATCH BASIN. ALL CATCH BASINS AND CONVEYANCE LINES SHALL BE CLEANED PRIOR TO PAVING. THE CLEANING OPERATION SHALL NOT FLUSH SEDIMENT-LADEN WATER INTO THE DOWNSTREAM SYSTEM.

12. ANY PERMANENT RETENTION/DETENTION FACILITY USED AS A TEMPORARY SETTLING BASIN SHALL BE MODIFIED WITH THE NECESSARY EROSION CONTROL MEASURES AND SHALL PROVIDE ADEQUATE STORAGE CAPACITY. IF THE FACILITY IS TO FUNCTION ULTIMATELY AS AN INFILTRATION SYSTEM, THE TEMPORARY FACILITY MUST BE ROUGH GRADED SO THAT THE
BOTTOM AND SIDES ARE AT LEAST THREE FEET ABOVE THE FINAL GRADE OF THE PERMANENT FACILITY.

13. COVER MEASURES WILL BE APPLIED IN CONFORMANCE WITH APPENDIX D OF THE SURFACE WATER DESIGN MANUAL.

14. PRIOR TO THE BEGINNING OF THE WET SEASON (OCT. 1), ALL DISTURBED AREAS SHALL BE REVIEWED TO IDENTIFY WHICH ONES CAN BE SEEDED IN PREPARATION FOR THE WINTER RAINS. DISTURBED AREAS SHALL BE SEEDED WITHIN ONE WEEK OF THE BEGINNING OF THE WET SEASON. A SKETCH MAP OF THOSE AREAS TO BE SEEDED AND THOSE AREAS TO REMAIN UNCOVERED SHALL BE SUBMITTED TO THE DDES INSPECTOR.

T.E.S.C. LEGEND

110	EXISTING CONTOUR LINES		CATCH BASIN INLET (C.B.I.) TYPE 1
415.80	SPOT ELEVATION		RETAINING WALL
411	NEW CONTOUR LINES		CHAINLINK FENCE AND CONCRETE CURB
411.5	NEW INTERVAL CONTOUR LINES		CHAINLINK FENCE
S=1.56%	SURFACE SLOPE	TW 374.85	TOP OF WALL ELEVATION
c	CONSTANT SURFACE SLOPE	BW 369.40	BOTTOM OF WALL ELEVATION
	MATCH TO EXISTING		TEMPORARY FILTER FABRIC FENCE
	TEMPORARY CATCH BASIN PROTECTION		EXISTING LIGHT POLE
			STRAW WATTLE
	SILT FENCE		INLET PROTECTION
	STABILIZED CONSTRUCTION ENTRANCE		NORTH

Ravensdale Park

Ravensdale, Washington

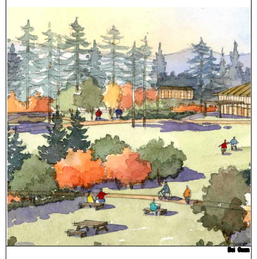

JONES JONES
105 SOUTH MAIN ST
SUITE 300
SEATTLE WA 98104

Ravensdale Park Fund
&
King County
Parks and Recreation Div.
201 S. Jackson St.
Suite 700
Seattle, WA 98104

HERRERA ENVIRONMENTAL CONSULTANTS
2200 Sixth Avenue
Suite 1100
Seattle, Washington
98121-1820
206-441-9080
206-441-9108 FAX
http://www.herrerainc.com

PERMIT SET

DATE: JANUARY 2011

REVISIONS:

TEMPORARY EROSION AND SEDIMENT CONTROL PLAN

SCALE: 1" = 20'-0"

FEET 0 5 10 20 40 60

DRAWN BY: AR
CHECKED BY: ML
JOB NO.: 08-03999-000

2-3-2011

SHEET NO.: C200

All drawings and written material appearing herein constitute the original and unpublished work of the architect and the same may not be duplicated, used, or disclosed without the written consent of the architect © Jones & Jones

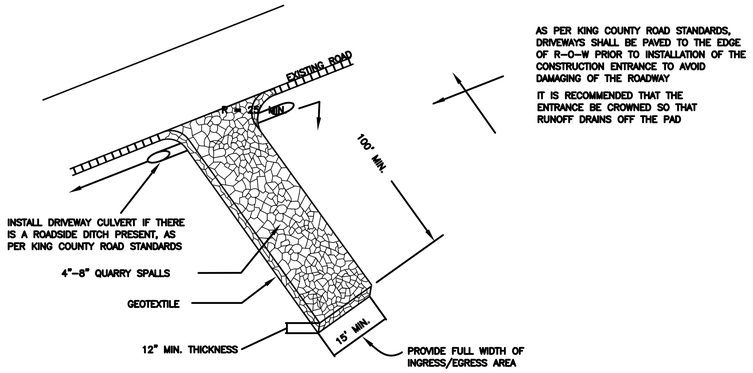

DETAIL - STABILIZED CONSTRUCTION ENTRANCE (TYPICAL) 2 C-200

SCALE: NTS

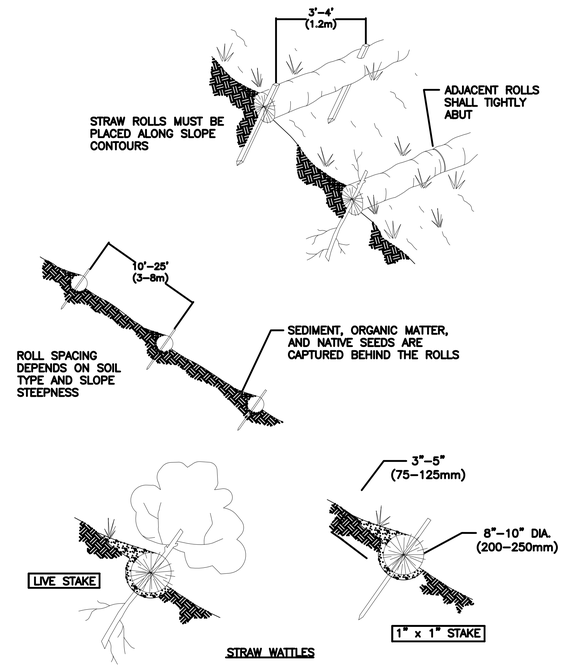

NOTES:

1. STRAW ROLL INSTALLATION REQUIRES THE PLACEMENT AND SECURE STAKING OF THE ROLL IN A TRENCH, 3" x 5" (75–125mm) DEEP, DUG ON CONTOUR. RUNOFF MUST NOT BE ALLOWED TO RUN UNDER OR AROUND ROLL.

DETAIL - STRAW WATTLES (TYPICAL) 3 C-200

SCALE: NTS

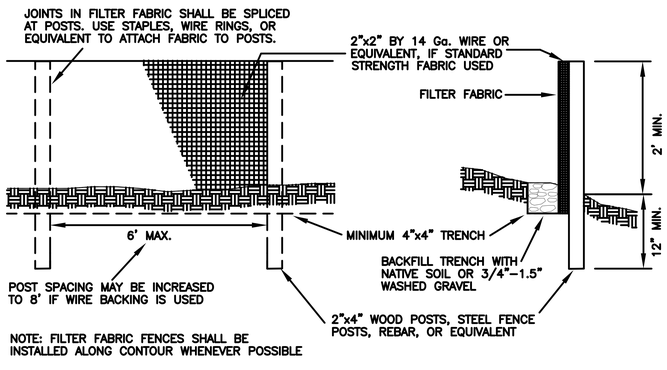

DETAIL - SILT FENCE (TYPICAL) 1 C-200

SCALE: NTS

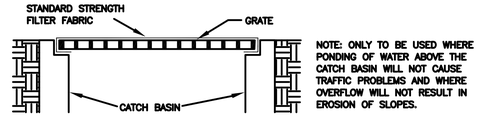

DETAIL - FILTER FABRIC INLET PROTECTION (TYPICAL) 6 C-200

SCALE: NTS

NORTH

Ravensdale Park

Ravensdale, Washington

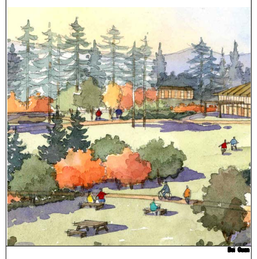

JONES & JONES
105 SOUTH MAIN ST
SUITE 300
SEATTLE WA 98104

Ravensdale Park Fund

&

King County
Parks and Recreation Div.
201 S. Jackson St.
Suite 700
Seattle, WA 98104

King County

HERRERA
ENVIRONMENTAL CONSULTANTS
2200 Sixth Avenue
Suite 1100
Seattle, Washington
98121-1820
206-441-9080
206-441-9108 FAX
http://www.herrerainc.com

PERMIT SET

NOT FOR CONSTRUCTION

DATE: JANUARY 2011

REVISIONS:

TESC DETAILS

SCALE: 1"-1/2" = 1'-0"

FEET 0 2" 4" 8" 1'-4" 2'-0"

DRAWN BY: T. PRESCOTT

CHECKED BY: M. RUEBEL

JOB NO.: 21101.109

SHEET NO.: C-210

All drawings and written material appearing herein constitute the original and unpublished work of the architect and the same may not be duplicated, used, or disclosed without the written consent of the architect © Jones & Jones

O:\proj\Y2008\08-03999-000\CAD\Dwgs\C-210.dwg

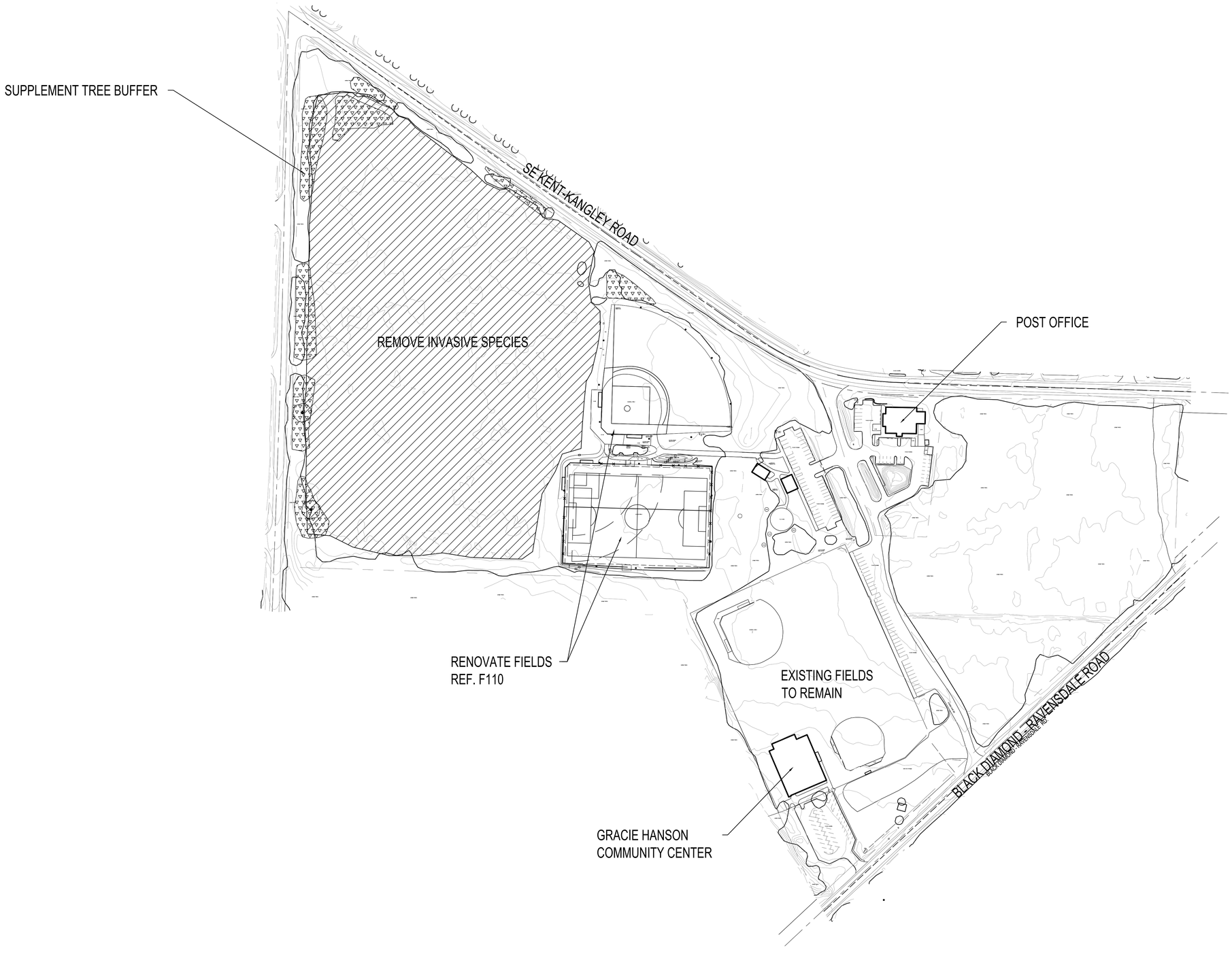

NORTH

Ravensdale Park

Ravensdale, Washington

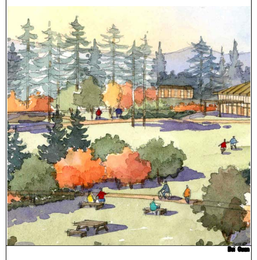

JONES JONES
105 SOUTH MAIN ST
SUITE 300
SEATTLE WA 98104

Ravensdale Park Fund
&
King County
Parks and Recreation Div.
201 S. Jackson St.
Suite 700
Seattle, WA 98104

PERMIT SET

DATE: JANUARY 2011

REVISIONS:

PARK CONTEXT PLAN

SCALE: 1" = 100'

0 25 50 100 200 300 FEET

DRAWN BY:

CHECKED BY: CAP

JOB NO.: 21101.109

SHEET NO.: L100

All drawings and written material appearing herein constitute the original and unpublished work of the architect and the same may not be duplicated, used, or disclosed without the written consent of the architect © **Jones & Jones**

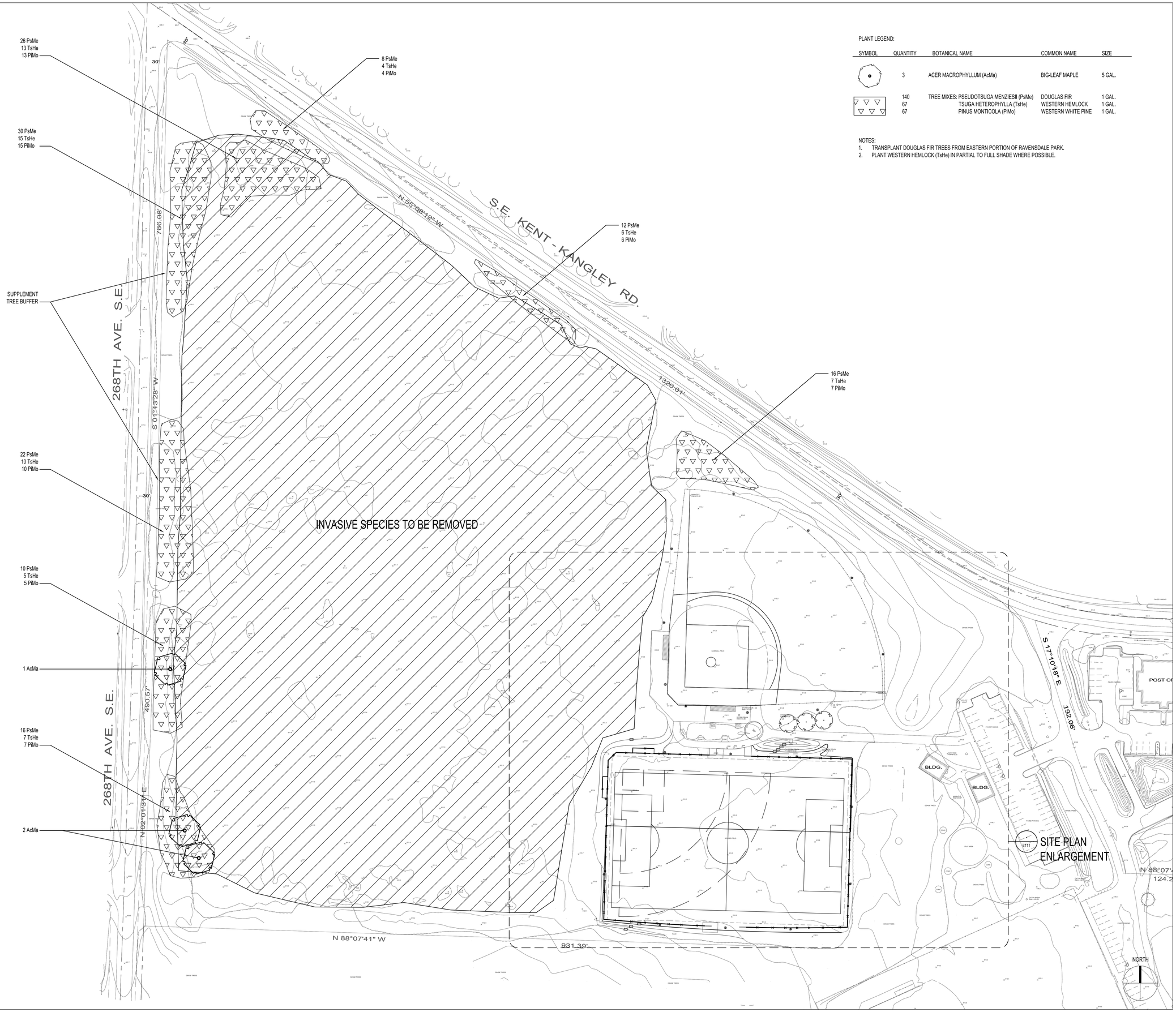

PLANT LEGEND:

SYMBOL	QUANTITY	BOTANICAL NAME	COMMON NAME	SIZE
	3	ACER MACROPHYLLUM (AcMa)	BIG-LEAF MAPLE	5 GAL.
	140	TREE MIXES: PSEUDOTSUGA MENZIESII (PsMe)	DOUGLAS FIR	1 GAL.
	67	TSUGA HETEROPHYLLA (TsHe)	WESTERN HEMLOCK	1 GAL.
	67	PINUS MONTICOLA (PlMo)	WESTERN WHITE PINE	1 GAL.

NOTES:
1. TRANSPLANT DOUGLAS FIR TREES FROM EASTERN PORTION OF RAVENSDALE PARK.
2. PLANT WESTERN HEMLOCK (TsHe) IN PARTIAL TO FULL SHADE WHERE POSSIBLE.

Ravensdale Park

Ravensdale, Washington

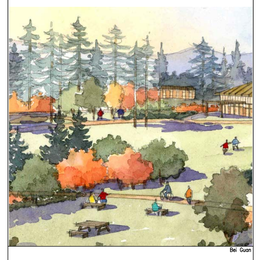

JONES JONES
105 SOUTH MAIN ST
SUITE 300
SEATTLE WA 98104

Ravensdale Park Fund
&
King County
Parks and Recreation Div.
201 S. Jackson St.
Suite 700
Seattle, WA 98104

PERMIT SET

DATE: JANUARY 2011

REVISIONS:

PERMIT SET

WEST SITE PLAN

SCALE: 1" = 50'-0"

0 25 50 100 150 FEET

DRAWN BY: XXX

CHECKED BY: XXX

JOB NO.: 21101.109

SHEET NO.: L 110

All drawings and written material appearing herein constitute the original and unpublished work of the architect and the same may not be duplicated, used, or disclosed without the written consent of the architect © **Jones & Jones**

LEGEND:

EXISTING FIELD LIGHT TO REMAIN

CONCRETE PAVING 3 L501

PLANT LEGEND:

SYMBOL	QUANTITY	BOTANICAL NAME	COMMON NAME	SIZE
TREES				
	1	ACER CIRCINATUM	VINE MAPLE	8-10 FT. HEIGHT
	3	ACER GRISEUM	PAPERBARK MAPLE	2" CAL.
SHRUBS				
	11	PAXISTIMA MYRSINITES	OREGON BOXWOOD	2 GAL.
	10	VACCINIUM ULIGINOSUM	BOG BLUEBERRY	2 GAL.
GROUNDCOVER				
		TURF GRASS		

Ravensdale Park

Ravensdale, Washington

JONES JONES
105 SOUTH MAIN ST
SUITE 300
SEATTLE WA 98104

Ravensdale Park Fund

&

King County
Parks and Recreation Div.
201 S. Jackson St.
Suite 700
Seattle, WA 98104

PERMIT SET

DATE: JANUARY 2011

REVISIONS:

SITE PLAN ENLARGEMENT

SCALE: 1" = 20'

0 10 20 40 60 FEET

DRAWN BY:

CHECKED BY:

JOB NO.:

SHEET NO.: L111

All drawings and written material appearing herein constitute the original and unpublished work of the architect and the same may not be duplicated, used, or disclosed without the written consent of the architect © Jones & Jones

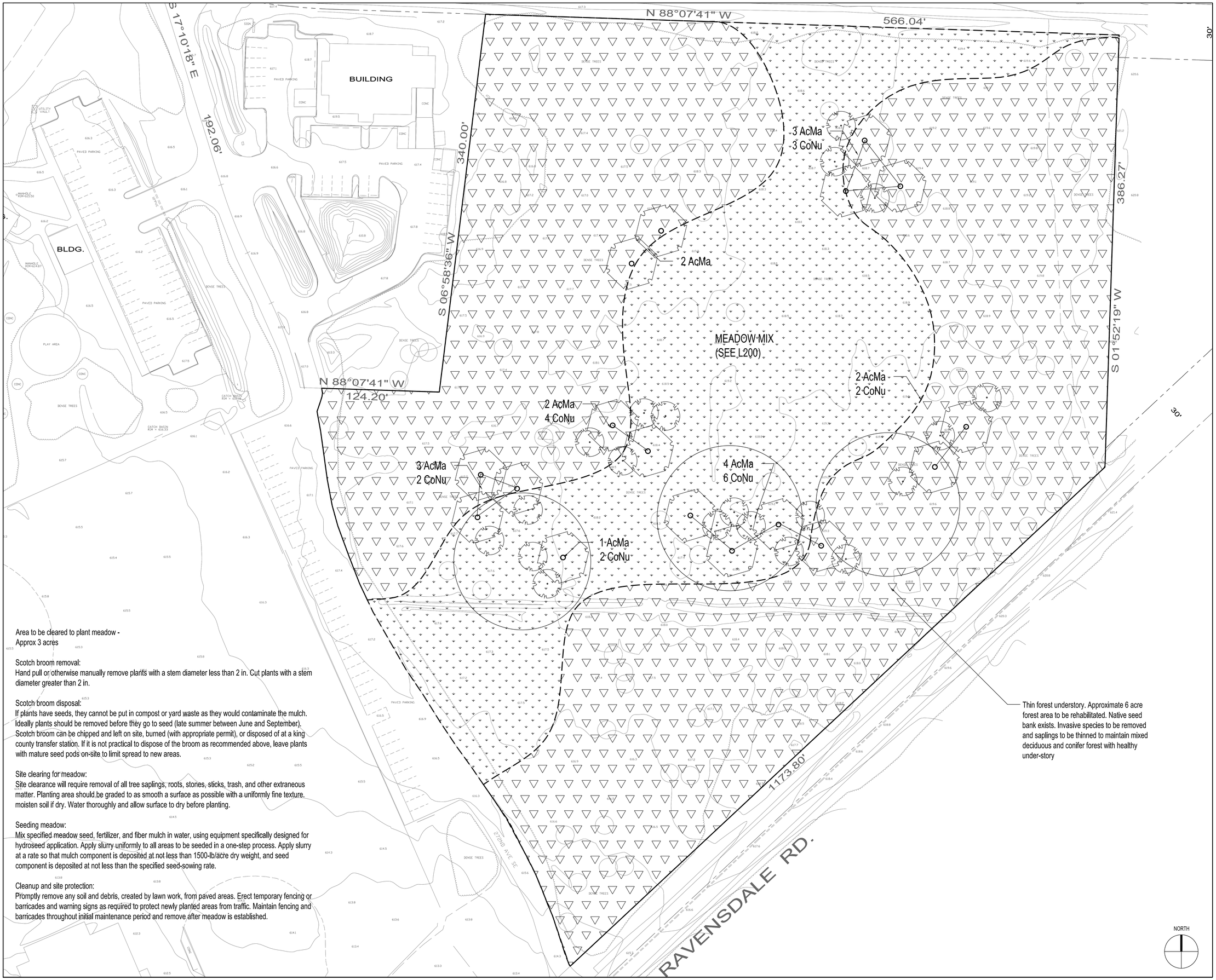

Area to be cleared to plant meadow -
Approx 3 acres

Scotch broom removal:
Hand pull or otherwise manually remove plants with a stem diameter less than 2 in. Cut plants with a stem diameter greater than 2 in.

Scotch broom disposal:
If plants have seeds, they cannot be put in compost or yard waste as they would contaminate the mulch. Ideally plants should be removed before they go to seed (late summer between June and September). Scotch broom can be chipped and left on site, burned (with appropriate permit), or disposed of at a king county transfer station. If it is not practical to dispose of the broom as recommended above, leave plants with mature seed pods on-site to limit spread to new areas.

Site clearing for meadow:
Site clearance will require removal of all tree saplings, roots, stones, sticks, trash, and other extraneous matter. Planting area should be graded to as smooth a surface as possible with a uniformly fine texture. moisten soil if dry. Water thoroughly and allow surface to dry before planting.

Seeding meadow:
Mix specified meadow seed, fertilizer, and fiber mulch in water, using equipment specifically designed for hydroseed application. Apply slurry uniformly to all areas to be seeded in a one-step process. Apply slurry at a rate so that mulch component is deposited at not less than 1500-lb/acre dry weight, and seed component is deposited at not less than the specified seed-sowing rate.

Cleanup and site protection:
Promptly remove any soil and debris, created by lawn work, from paved areas. Erect temporary fencing or barricades and warning signs as required to protect newly planted areas from traffic. Maintain fencing and barricades throughout initial maintenance period and remove after meadow is established.

Thin forest understory. Approximate 6 acre forest area to be rehabilitated. Native seed bank exists. Invasive species to be removed and saplings to be thinned to maintain mixed deciduous and conifer forest with healthy under-story

Ravensdale Park

Ravensdale, Washington

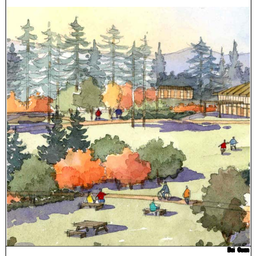

JONES JONES
105 SOUTH MAIN ST
SUITE 300
SEATTLE WA 98104

Ravensdale Park Fund
&
King County
Parks and Recreation Div.
201 S. Jackson St.
Suite 700
Seattle, WA 98104

King County

DATE: 28 April, 2009

REVISIONS:

EAST SITE PLAN

SCALE: 1" = 30'

FEET
0 x1 x2 x3 x4 x5

DRAWN BY: XXX
CHECKED BY: XXX
JOB NO.: 21101.109

SHEET NO.: L112

All drawings and written material appearing herein constitute the original and unpublished work of the architect and the same may not be duplicated, used, or disclosed without the written consent of the architect © Jones & Jones

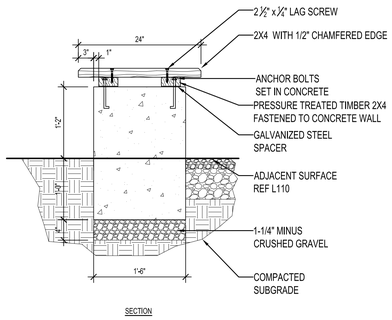

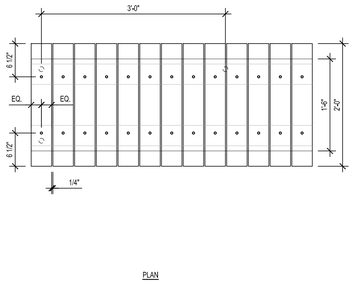

1 SEAT WALL

SCALE: 1"=1'-0"

NOTE: CONCRETE PAVEMENT IS 4" THICK
UNLESS OTHERWISE NOTED ON PLANS

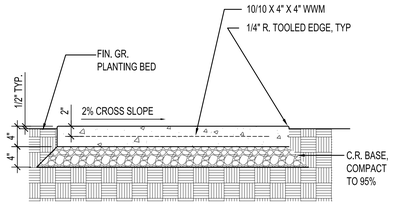

3 CONCRETE PAVING

SCALE: 1"=1'-0"

CONCRETE PAVING 4.DWG

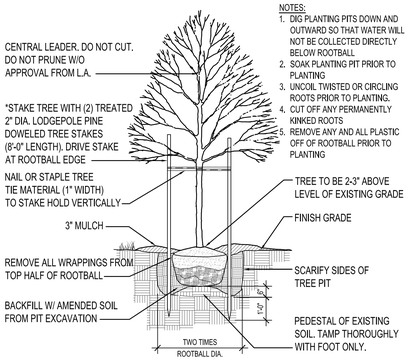

NOTES:
1. DIG PLANTING PITS DOWN AND OUTWARD SO THAT WATER WILL NOT BE COLLECTED DIRECTLY BELOW ROOTBALL
2. SOAK PLANTING PIT PRIOR TO PLANTING
3. UNCOIL TWISTED OR CIRCLING ROOTS PRIOR TO PLANTING.
4. CUT OFF ANY PERMANENTLY KINKED ROOTS
5. REMOVE ANY AND ALL PLASTIC OFF OF ROOTBALL PRIOR TO PLANTING

6 TYPICAL DECIDIOUS TREE

SCALE: 3/8"=1'-0"

TYPICAL DECIDIOUS TREE.DWG

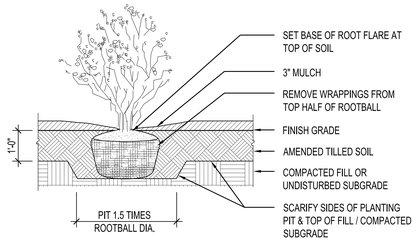

7 TYPICAL SHRUB

SCALE: 1/2"=1'-0"

Typical Shrub.DWG

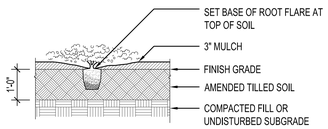

8 TYPICAL GROUNDCOVER

SCALE: 1/2"=1'-0"

Typical Groundcover.DWG

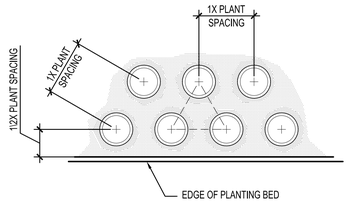

9 GROUNDCOVER SPACING

SCALE: 3/4"=1'-0"

Ravensdale Park

Ravensdale, Washington

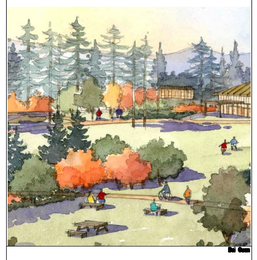

JONES JONES
105 SOUTH MAIN ST
SUITE 300
SEATTLE WA 98104

Ravensdale Park Fund
&
King County
Parks and Recreation Div.
201 S. Jackson St.
Suite 700
Seattle, WA 98104

PERMIT SET

DATE: JANUARY 2011

REVISIONS:

SITE AND PLANTING DETAILS

SCALE:

FEET
0

DRAWN BY:

CHECKED BY:

JOB NO.:

SHEET NO.: L501

All drawings and written material appearing herein constitute the original and unpublished work of the architect and the same may not be duplicated, used, or disclosed without the written consent of the architect © Jones & Jones

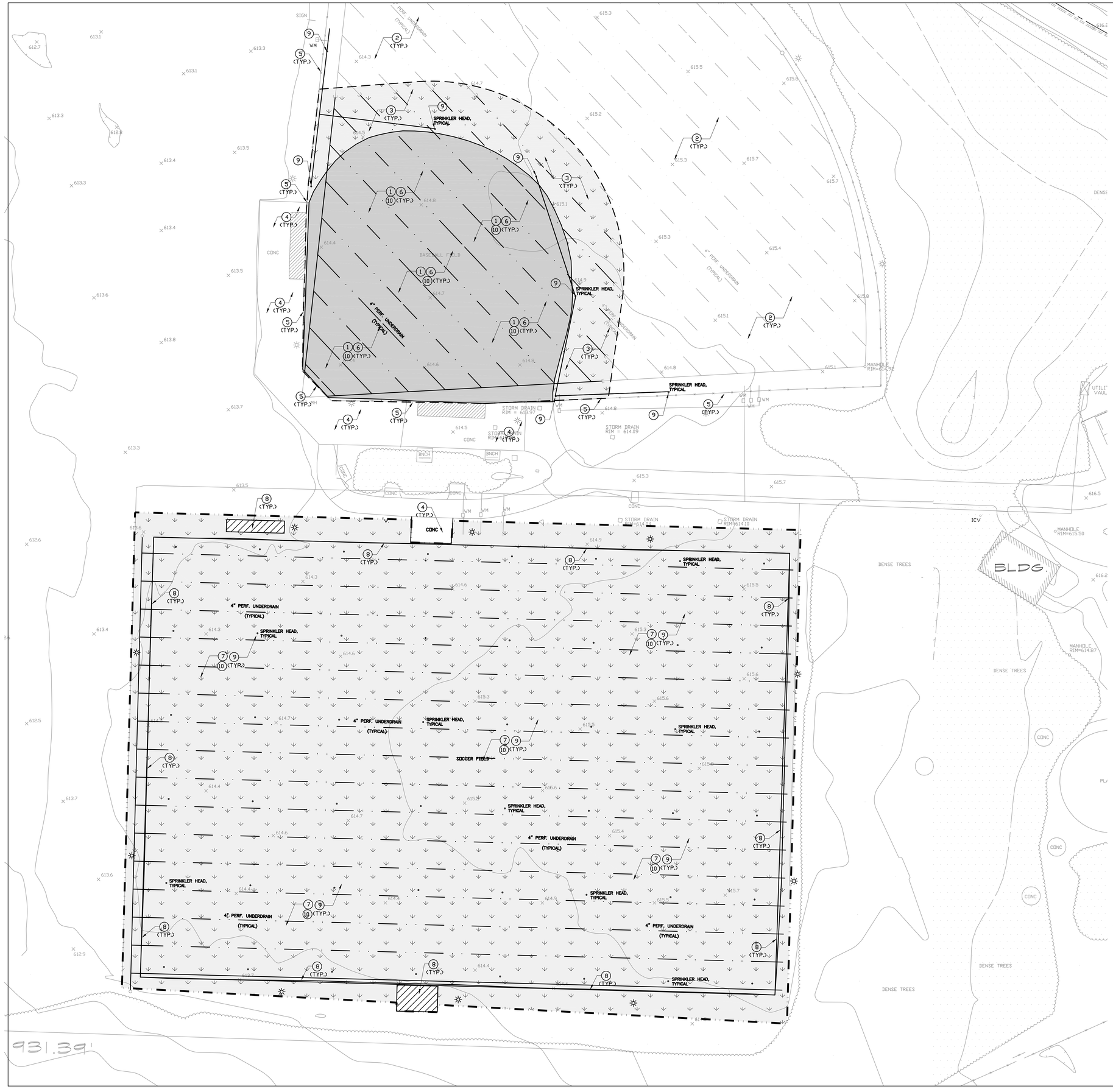

DEMOLITION NOTES

1. REMOVE EXISTING PLATES AND ANCHORS AND DELIVER TO THE OWNER ONSITE.
2. PROTECT THE EXISTING NATURAL TURF OUTFIELD AREA.
3. CUT, REMOVE AND DISPOSE EXISTING NATURAL TURF SOD OF OFF SITE TO FACILITATE TRANSITION TO NEW SYNTHETIC TURF.
4. PROTECT EXISTING CONCRETE PAVING FROM ANY DAMAGE THROUGHOUT CONSTRUCTION.
5. PROTECT BACKSTOP AND FENCING FROM ANY DAMAGE THROUGHOUT CONSTRUCTION.
6. REMOVE EXISTING INFIELD MIX MATERIALS (APPROXIMATELY 4' DEPTH) AND DISPOSE OF OFF SITE. FIELD LOCATE EXISTING SPRINKLER HEADS IN NATURAL TURF. CAP AND REMOVE EXISTING HEADS. DELIVER TO OWNER ON SITE.
7. STRIP AREA WITHIN LIMITS OF DISTURBANCE OF EXISTING SOD, ORGANIC MATERIALS, AND EXCESS SOIL AND DISPOSE OF OFF SITE. ALL EXCESS AND UNSUITABLE SOIL MATERIALS SHALL BE REMOVED AND DISPOSED OF OFF SITE.
8. REMOVE EXISTING CONCRETE CURB OR PAVING AND DISPOSE OF OFF SITE.
9. REMOVE AND CAP EXISTING IRRIGATION SPRINKLER HEADS AND RISER ASSEMBLIES, CLEAN, PACKAGE AND DELIVER TO THE OWNER ONSITE UNLESS OTHERWISE NOTED. BACKFILL ALL VOIDS WITH APPROVED SOIL OR SURFACE EXCAVATION.
10. REMOVE ALL EXISTING SUBSURFACE DRAINAGE LATERAL AND COLLECTOR LINES PRIOR TO SUBGRADE ESTABLISHMENT AND DISPOSE OF OFF SITE. BACKFILL ALL VOIDS WITH APPROVED SOIL OR SURFACE EXCAVATION.
11. PROTECT ALL UTILITIES TO REMAIN.

DEMOLITION LEGEND

- EXISTING NATURAL TURF TO BE REMOVED AND DISPOSED OF OFF SITE
- INFIELD MIX TO BE REMOVED AND DISPOSED OF OFF SITE
- CONCRETE PAVING TO BE REMOVED AND DISPOSED OF OFFSITE
- EXISTING CONCRETE CURBING TO BE REMOVED AND DISPOSED OF OFF SITE
- SUBSURFACE DRAINAGE TO BE REMOVED
- EXISTING SPRINKLER HEAD TO BE REMOVED
- LIMIT OF DISTURBANCE

Call 2 Working Days Before You Dig
1-800-424-5555
Utilities Underground Location Center
(ID,MT,ND,OR,WA)

NORTH

Ravensdale Park

Ravensdale, Washington

JONES JONES
105 SOUTH MAIN ST
SUITE 300
SEATTLE WA 98104

Ravensdale Park Fund
&
King County
Parks and Recreation Div.
201 S. Jackson St.
Suite 700
Seattle, WA 98104

DA HOGAN
119 1st Avenue South, Suite 110
Seattle, Washington 98104
p. 206.285.0400
f. 206.285.0480

PERMIT SET

DAVID L. ANDERSON
STATE OF WASHINGTON
REGISTERED PROFESSIONAL ENGINEER
EXPIRES 8/1/11

DATE: JANUARY 2011

REVISIONS:

FIELD DEMOLITION PLAN

SCALE: 1" = 20'-0"

0 5 10 20 40 60 FEET

DRAWN BY:	CPW/ EJG
CHECKED BY:	DLA/ EJG
JOB NO.:	21101.109

SHEET NO.: F040

All drawings and written material appearing herein constitute the original and unpublished work of the architect and the same may not be duplicated, used, or disclosed without the written consent of the architect © Jones & Jones

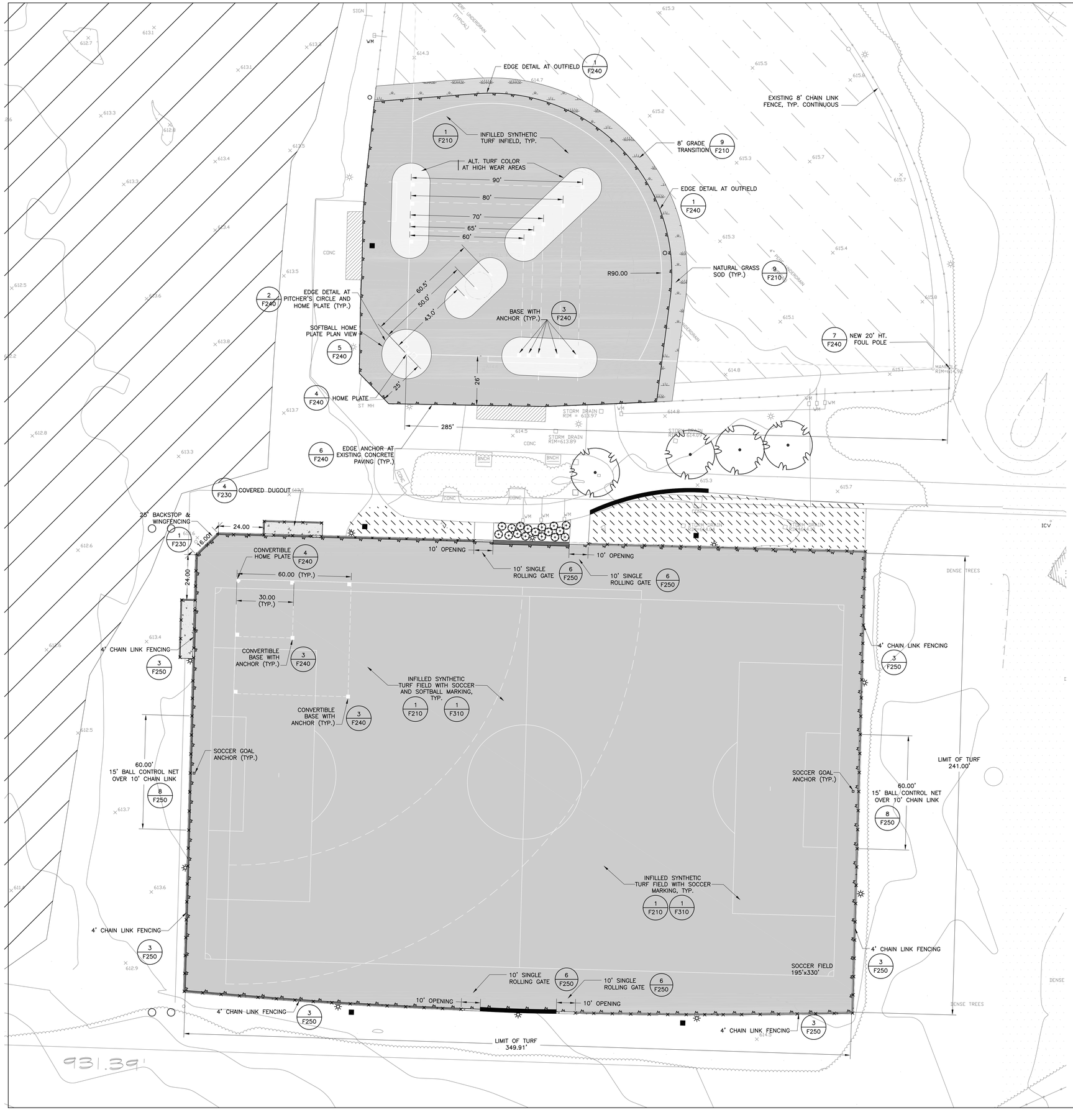

LAYOUT NOTES

LAYOUT LEGEND

- NATURAL GRASS SOD
- SYNTHETIC TURF (GREEN COLORED)
- SYNTHETIC TURF (TAN COLORED)
- CONCRETE
- CHAINLINK FENCE AND CONCRETE CURB
- CHAINLINK FENCE
- CONCRETE CURBING
- LIMIT OF SYNTHETIC TURF AND CONCRETE EDGE ANCHOR
- CATCH BASIN INLET (C.B.I.) TYPE 1
- EXISTING LIGHT POLE

NORTH

Ravensdale Park

Ravensdale, Washington

JONES JONES
105 SOUTH MAIN ST
SUITE 300
SEATTLE WA 98104

Ravensdale Park Fund

&

King County
Parks and Recreation Div.
201 S. Jackson St.
Suite 700
Seattle, WA 98104

DA HOGAN
119 1st Avenue South, Suite 110
Seattle, Washington 98104
p. 206.285.0400
f. 206.285.0480

PERMIT SET

DAVID L. ANDERSON
STATE OF WASHINGTON
21676
REGISTERED
PROFESSIONAL ENGINEER
EXPIRES 8/1/11

DATE: JANUARY 2011

REVISIONS:

FIELD LAYOUT PLAN

SCALE: 1" = 20'-0"

0 5 10 20 40 60 FEET

DRAWN BY:	CPW/ EJG
CHECKED BY:	DLA/ EJG
JOB NO.:	21101.109

SHEET NO.: F110

All drawings and written material appearing herein constitute the original and unpublished work of the architect and the same may not be duplicated, used, or disclosed without the written consent of the architect © Jones & Jones

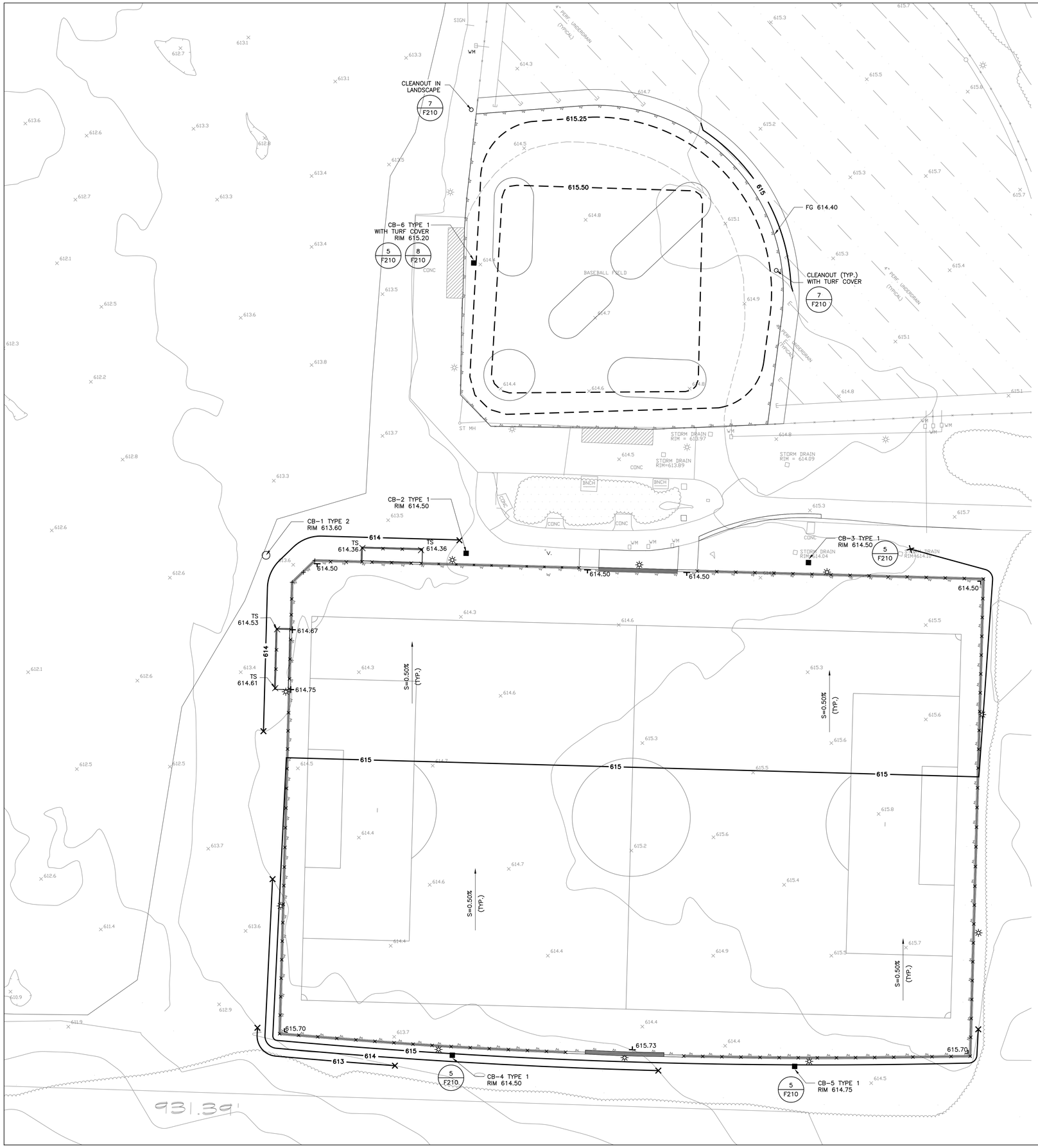

GRADING NOTES

PENDING

GRADING LEGEND

110	EXISTING CONTOUR LINES		CATCH BASIN INLET (C.B.I.) TYPE 1
415.80	SPOT ELEVATION		RETAINING WALL
411	NEW CONTOUR LINES		CHAINLINK FENCE AND CONCRETE CURB
411.5	NEW INTERVAL CONTOUR LINES		CHAINLINK FENCE
S=1.56%	SURFACE SLOPE	TW 374.85	TOP OF WALL ELEVATION
c	CONSTANT SURFACE SLOPE	BW 369.40	BOTTOM OF WALL ELEVATION
	MATCH TO EXISTING		TEMPORARY FILTER FABRIC FENCE
	TEMPORARY CATCH BASIN PROTECTION		EXISTING LIGHT POLE

NORTH

Ravensdale Park

Ravensdale, Washington

JONES JONES
105 SOUTH MAIN ST
SUITE 300
SEATTLE WA 98104

Ravensdale Park Fund
&
King County
Parks and Recreation Div.
201 S. Jackson St.
Suite 700
Seattle, WA 98104

DA HOGAN
119 1st Avenue South, Suite 110
Seattle, Washington 98104
p. 206.285.0400
f. 206.285.0480

PERMIT SET

DAVID L. ANDERSON
STATE OF WASHINGTON
REGISTERED PROFESSIONAL ENGINEER
EXPIRES 8/1/11

DATE: JANUARY 2011

REVISIONS:

FIELD GRADING PLAN

SCALE: 1" = 20'-0"

0 5 10 20 40 60 FEET

DRAWN BY: CPW/ EJG
CHECKED BY: DLA/ EJG
JOB NO.: 21101.109

SHEET NO.: F120

All drawings and written material appearing herein constitute the original and unpublished work of the architect and the same may not be duplicated, used, or disclosed without the written consent of the architect © Jones & Jones

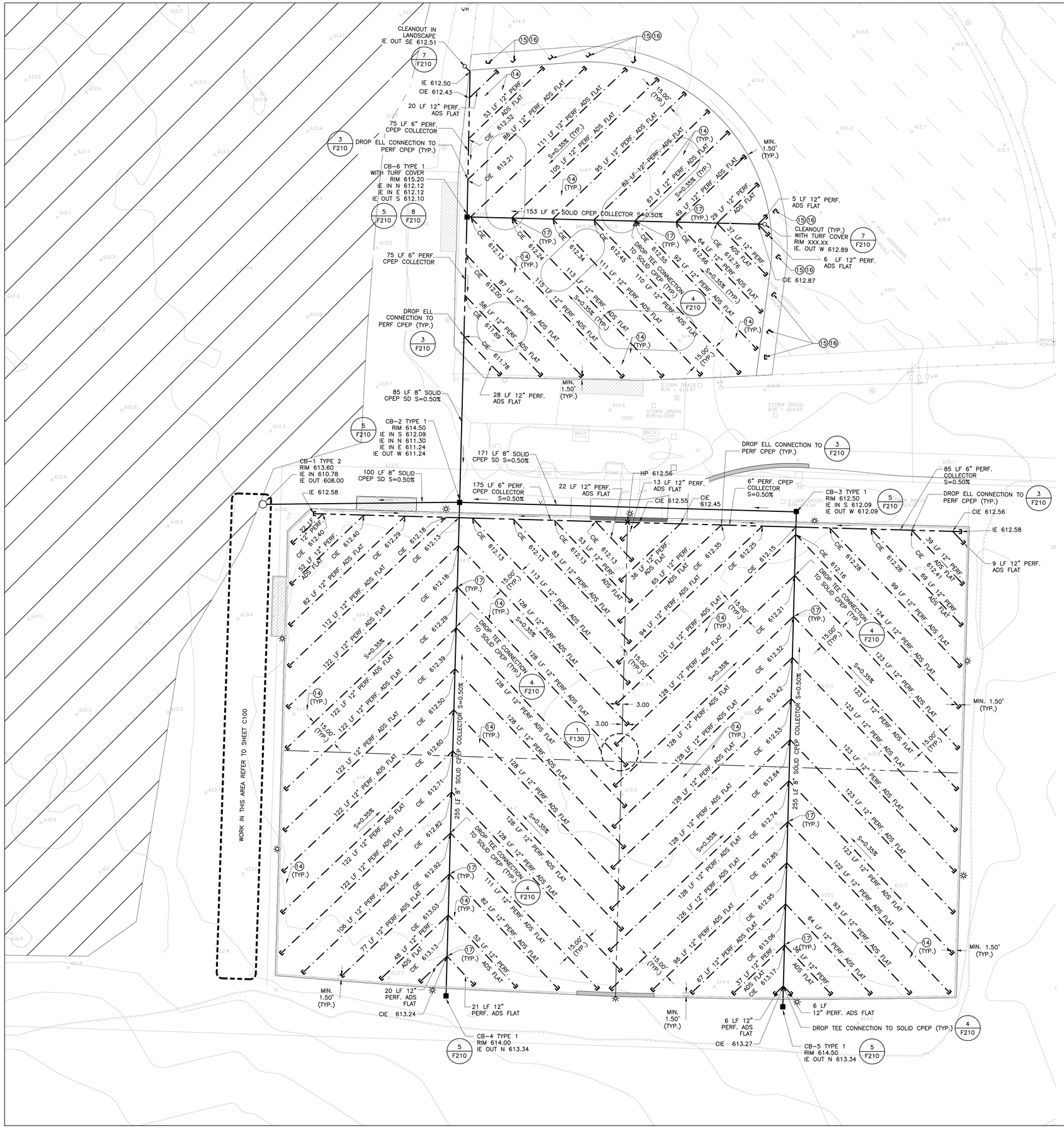

DRAINAGE NOTES

1. PERFORATED AND NON-PERFORATED SUBSURFACE DRAINAGE COLLECTOR PIPE CAN BE INSTALLED PRIOR TO FINAL ACCEPTANCE OF THE FIELD SUBGRADE.
2. TRENCH EXCAVATION SHALL BE MADE TO THE ALIGNMENT, ELEVATION, GRADE AND SLOPE AS INDICATED ON THE DRAWINGS. TRENCHING SHALL BE ACCOMPLISHED UTILIZING EQUIPMENT WITH SLOPE AND DEPTH CONTROL, SUCH AS "LASER PLANE CONTROL SYSTEM", SO AS TO ENSURE ACCURACY IN THE BOTTOM OF THE TRENCH.
3. NO HIGH POINTS ABOVE DESIGNATED INVERT OR CALCULATED TRENCH BOTTOM ELEVATION WILL BE PERMITTED. NO SLOUGHING OF SITE MATERIAL OR LOOSE EXCAVATED SOIL WILL BE PERMITTED TO REMAIN IN THE TRENCHES.
4. SURPLUS EXCAVATED SOIL SHALL BE REMOVED FROM THE FIELD AREA PRIOR TO FABRIC LINER PLACEMENT. EXCAVATED MATERIAL MAY NOT REMAIN ON SUBGRADE.
5. PROVIDE A SMOOTH, EVEN SUBGRADE AFTER REMOVAL OF THE TRENCH MATERIAL. LEAVE NO LOOSE MATERIAL ON THE SUBGRADE.
6. EXCAVATION BELOW INVERT GRADE MUST BE ESTABLISHED TO A DEPTH SO AS TO PROVIDE FOR SPECIFIED PLACEMENT OF PEA GRAVEL BEDDING AT BOTTOM OF PIPE ELEVATION PRIOR TO LAYING THE PERFORATED PIPE.
7. NO FOREIGN MATERIAL WILL BE PERMITTED INSIDE, ALONGSIDE, UNDER, OR ON TOP OF THE PERFORATED DRAIN PIPE.
8. THE BACKFILL FOR ALL PERFORATED PIPE SHALL BE CLEAN WASHED PEA GRAVEL. REFER TO THE SPECIFICATIONS FOR THE GRADATION REQUIREMENTS.
9. BACKFILL FOR NON-PERFORATED SUBSURFACE COLLECTOR TO BE NATIVE SOIL.
10. DURING PLACEMENT OF SPECIFIED TRENCH BACKFILL, PIPE MUST BE HELD IN PLACE TO PREVENT DISPLACEMENT AND PROVIDE FOR ACHIEVING SPECIFIED INVERT ELEVATION. DO NOT DAMAGE PIPE OR ALLOW PIPE TO BE DISPLACED BY PLACEMENT OF BACKFILL MATERIAL.
11. CAP THE ENDS OF ALL FLAT DRAIN LATERAL RUNS. ALL OPEN ENDS DURING CONSTRUCTION ARE TO BE TEMPORARILY CAPPED OR PLUGGED.
12. CONNECTION OF FLAT DRAIN LATERALS TO COLLECTOR DRAINS SHALL BE MADE WITH A COMBINATION REDUCING TEE AND 90° ADAPTER OR DROP ELL.
13. NO TRUCKS OR EQUIPMENT WILL BE ALLOWED TO DRIVE OVER THE TOP OF THE TRENCHES EXCEPT TRACK-EQUIPPED MACHINERY UTILIZED IN SPREADING BASE AGGREGATE. BACKFILLED TRENCHES ARE TO BE STAKED AND FLAGGED 3' ABOVE GRADE AT MAXIMUM 30' SPACING FOR IDENTITY.

(14) REMOVE EXISTING DRAINAGE BENEATH BASEBALL INFIELD AND SOCCER FIELD. BACKFILL ALL VOIDS WITH APPROVED SOIL OR SURFACE EXCAVATION.

(15) LOCATE AND CAP COLLECTOR & LATERAL WITHIN THE GRADING TRANSITION ZONE.

(16) REMOVE TOP 6" OF EXISTING FIELD SUBDRAINAGE BACKFILL & REPLACE WITH NEW WITHIN THE LIMIT OF DISTURBANCE.

(17) OFF-SET PERFORATED SUBSURFACE DRAINAGE LATERALS PER DETAIL 4/F210

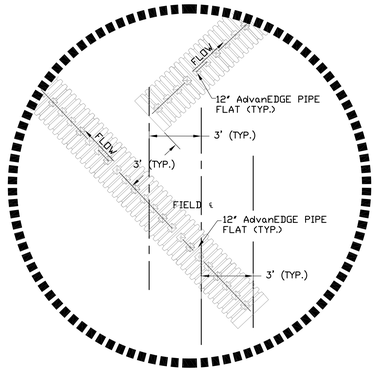

1/F130 FIELD CENTERLINE SUBSURFACE FLATDRAIN
NOT TO SCALE

DRAINAGE LEGEND

	END CAP
	12" ADS ADVANEDGE FLAT DRAIN
	PERF. CPEP SUBSURFACE DRAINAGE COLLECTOR
	SOLID CPEP SUBSURFACE DRAINAGE COLLECTOR OR STORM DRAIN PIPE
	REFURBISHED SUBSURFACE DRAINAGE
S=0.50%	SLOPE/ PIPE GRADIENT
IE 414.30	INVERT ELEVATION
CIE 413.00	COLLECTOR INVERT ELEVATION
■	CATCH BASIN INLET (CBI) TYPE 1
◎	CATCH BASIN INLET (CBI) TYPE 2
○	CLEANOUT
✳	EXISTING LIGHT POLE

NORTH

Ravensdale Park

Ravensdale, Washington

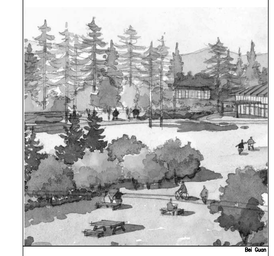

JONES JONES
105 SOUTH MAIN ST
SUITE 300
SEATTLE WA 98104

Ravensdale Park Fund
&
King County
Parks and Recreation Div.
201 S. Jackson St.
Suite 700
Seattle, WA 98104

DA HOGAN
119 1st Avenue South, Suite 110
Seattle, Washington 98104
p. 206.285.0400
f. 206.285.0480

PERMIT SET

DATE: JANUARY 2011

REVISIONS:

FIELD DRAINAGE PLAN

SCALE: 1" = 20'-0"
0 5 10 20 40 60 FEET

DRAWN BY:	CPW/ EJG
CHECKED BY:	DLA/ EJG
JOB NO.:	21101.109
SHEET NO.:	F130

All drawings and written material appearing herein constitute the original and unpublished work of the architect and the same may not be duplicated, used, or disclosed without the written consent of the architect © Jones & Jones

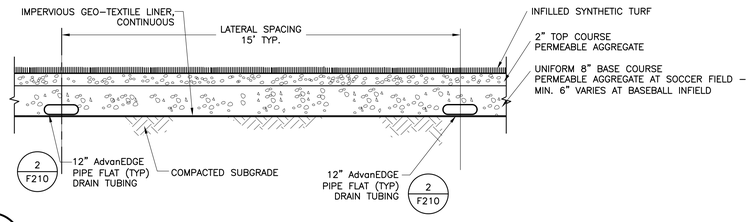

1 F210 SYNTHETIC TURF FIELD AND DRAINAGE SECTION

NOT TO SCALE

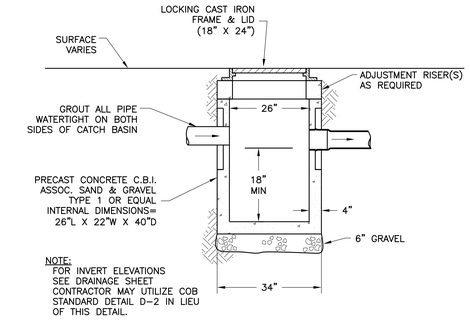

5 F210 TYPE 1 CATCH BASIN

NOT TO SCALE

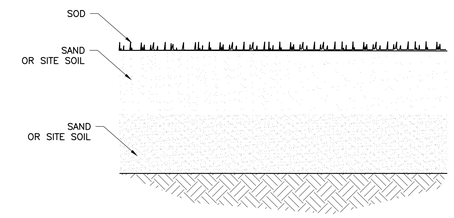

9 F210 GRADE TRANSITION SECTION

NOT TO SCALE

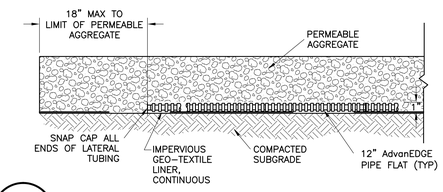

2 F210 SUBSURFACE FLATDRAIN LATERAL

NOT TO SCALE

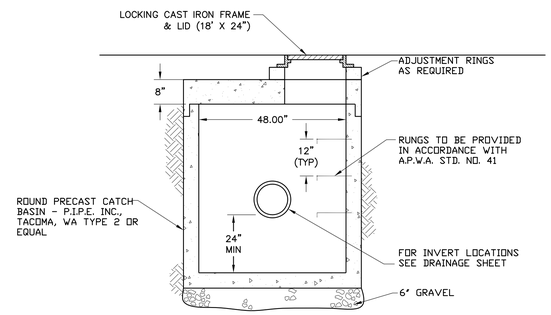

6 F210 TYPE 2 CATCH BASIN

NOT TO SCALE

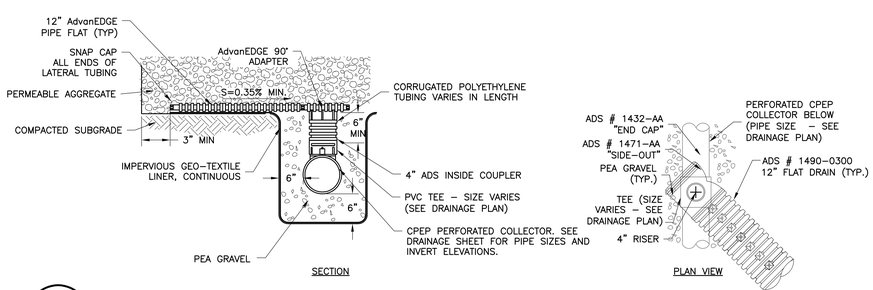

3 F210 SUBSURFACE DRAINAGE DROP ELL CONNECTION TO PERF. COLLECTOR

NOT TO SCALE

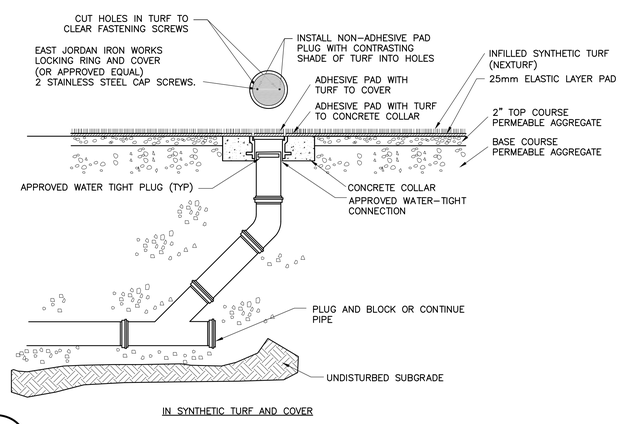

7 F210 CLEANOUT

NOT TO SCALE

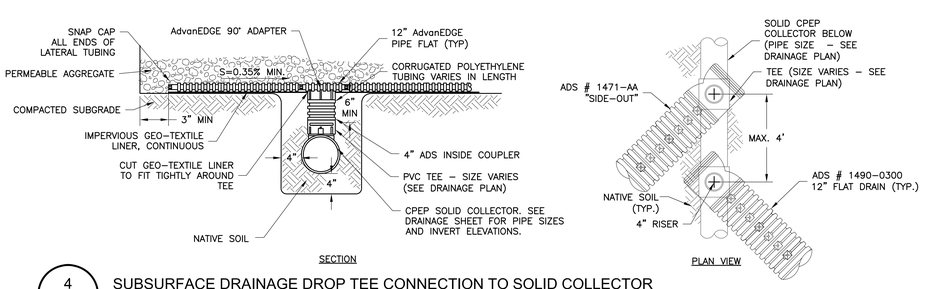

4 F210 SUBSURFACE DRAINAGE DROP TEE CONNECTION TO SOLID COLLECTOR

NOT TO SCALE

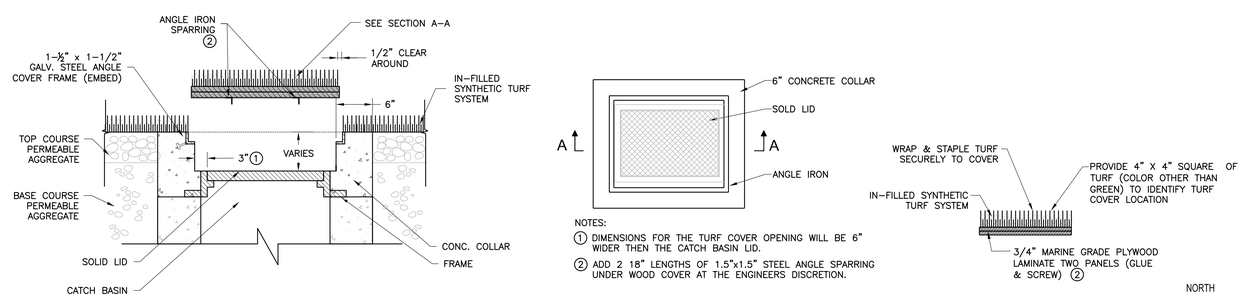

8 F210 CATCH BASIN COVER IN TURF

NOT TO SCALE

NORTH

Ravensdale Park

Ravensdale, Washington

JONES JONES
105 SOUTH MAIN ST
SUITE 300
SEATTLE WA 98104

Ravensdale Park Fund

&

King County
Parks and Recreation Div.
201 S. Jackson St.
Suite 700
Seattle, WA 98104

DA HOGAN
119 1st Avenue South, Suite 110
Seattle, Washington 98104
p. 206.285.0400
f. 206.285.0480

PERMIT SET

DAVID L. ANDERSON STATE OF WASHINGTON 46876 REGISTERED PROFESSIONAL ENGINEER

EXPIRES 8/1/11

DATE: JANUARY 2011

REVISIONS:

FIELD DRAINAGE DETAILS

SCALE: NTS

0 FEET

DRAWN BY:	CPW/EJG
CHECKED BY:	DLA/EJG
JOB NO.:	21101.109

SHEET NO.: F210

All drawings and written material appearing herein constitute the original and unpublished work of the architect and the same may not be duplicated, used, or disclosed without the written consent of the architect © Jones & Jones

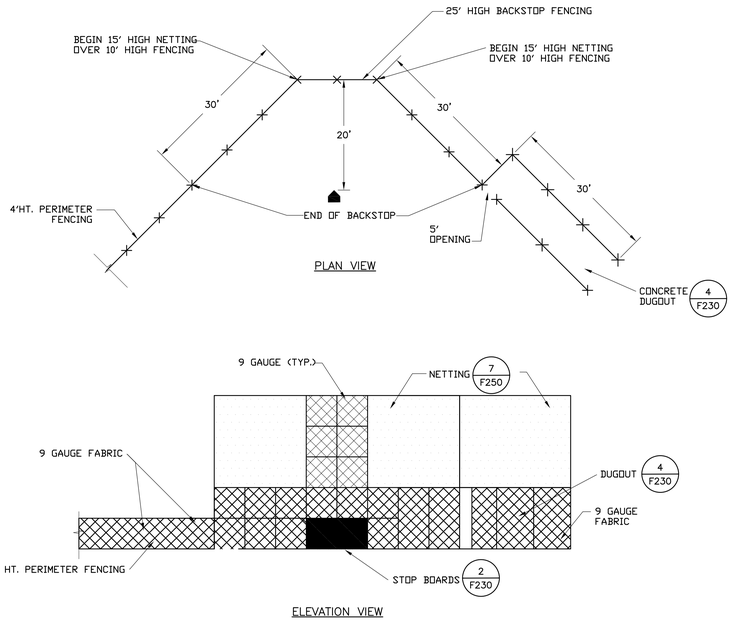

1 F230 SOFTBALL BACKSTOP AND WING FENCING

NOT TO SCALE

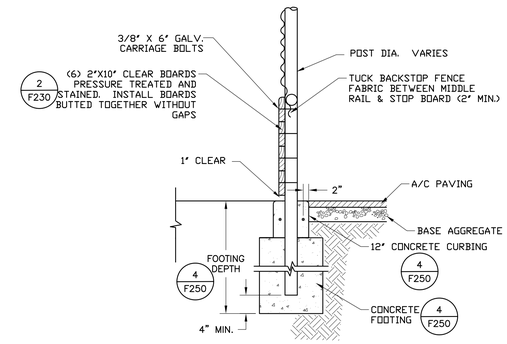

3 F230 BACKSTOP WITH STOP BOARD

NOT TO SCALE

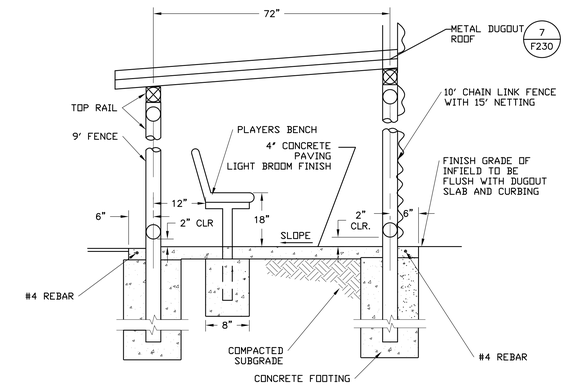

6 F230 CONCRETE DUGOUT SECTION

NOT TO SCALE

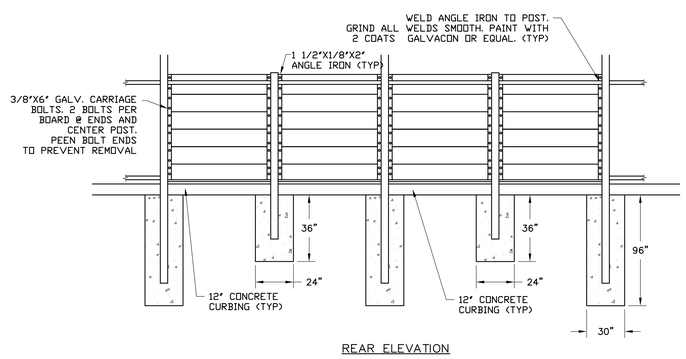

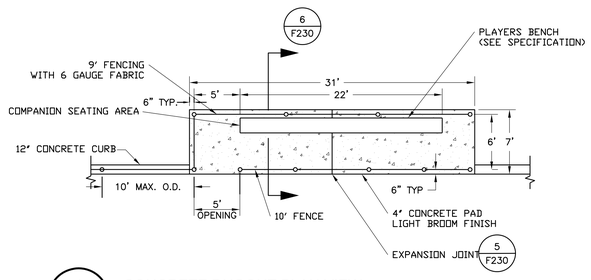

4 F230 CONCRETE DUGOUT PLAN VIEW

NOT TO SCALE

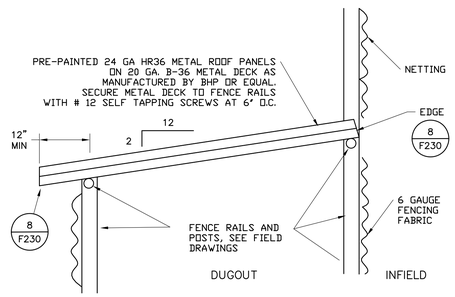

7 F230 DUGOUT ROOF

NOT TO SCALE

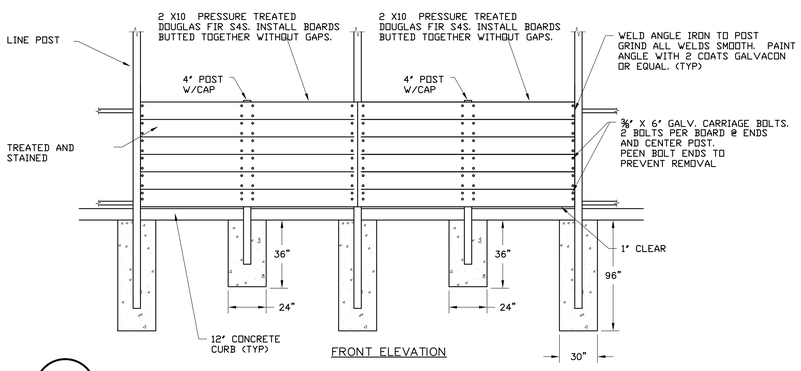

2 F230 STOP BOARD

NOT TO SCALE

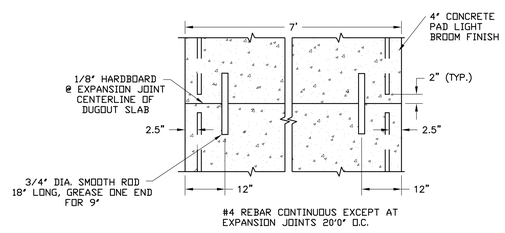

5 F230 CONCRETE DUGOUT - EXPANSION JOINT

NOT TO SCALE

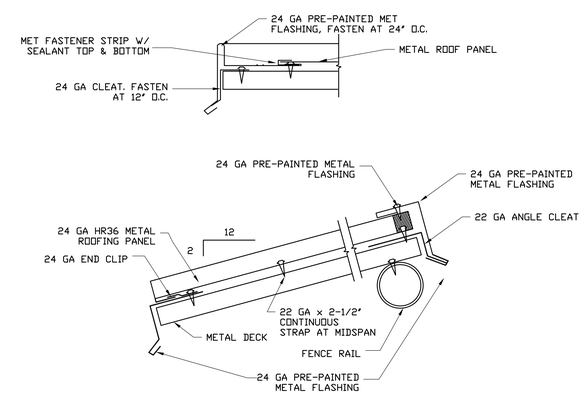

8 F230 DUGOUT ROOF EDGE

NOT TO SCALE

NORTH

Ravensdale Park

Ravensdale, Washington

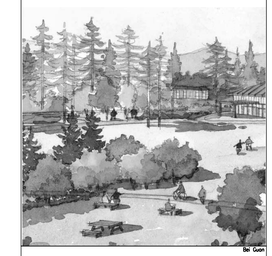

JONES JONES
105 SOUTH MAIN ST
SUITE 300
SEATTLE WA 98104

Ravensdale Park Fund

&

King County
Parks and Recreation Div.
201 S. Jackson St.
Suite 700
Seattle, WA 98104

King County

DA HOGAN
119 1st Avenue South, Suite 110
Seattle, Washington 98104
p. 206.285.0400
f. 206.285.0480

PERMIT SET

DAVID L. ANDERSON
STATE OF WASHINGTON
46476
REGISTERED
PROFESSIONAL ENGINEER
EXPIRES 8/1/11

DATE: JANUARY 2011

REVISIONS:

FIELD BACKSTOP DETAILS

SCALE: NTS

0 FEET

DRAWN BY: CPW/EJG

CHECKED BY: DLA/EJG

JOB NO.: 21101.109

SHEET NO.: F230

All drawings and written material appearing herein constitute the original and unpublished work of the architect and the same may not be duplicated, used, or disclosed without the written consent of the architect © Jones & Jones

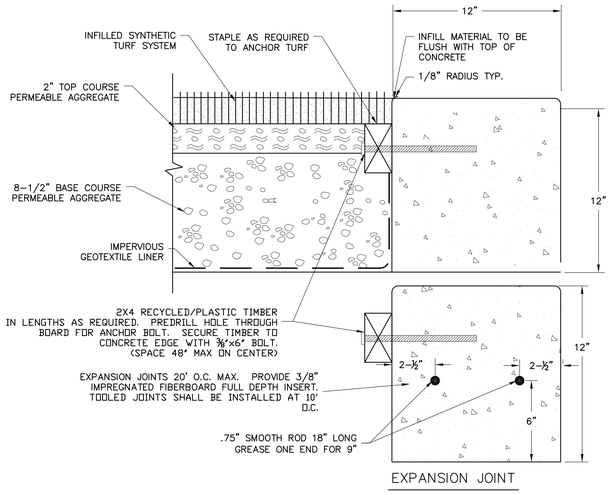

1 / F250 CONCRETE EDGE AT SYNTHETIC TURF

NOT TO SCALE

FENCING TYPE	25' HIGH FENCING	10' HIGH WITH 15' NETTING	10' HIGH FENCING	9' HIGH FENCING	4' HIGH FENCING
CORNER POST					
TERMINAL POST	8.625" OD	8.625" OD	4.000" OD	4.000" OD	2.875" OD
LINE POST	8.625" OD	8.625" OD	4.000" OD	4.000" OD	2.875" OD
FOOTING DEPTH	4.000" OD	4.000" OD	2.875" OD	2.875" OD	2.375" OD
FOOTING DIAMETER	8'-6"	8'-6"	60"	60"	24"
TOP RAIL HT.	30"	30"	12"	12"	12"
INTERMEDIATE RAIL	10'	10'	10'	9'	4'
HTS.	5'	5'	5'	4'-6"	---
BOTTOM RAIL HT	1"	1"	1"	1"	1"
TENSION WIRE HTS.	2'	2'	2'	2'	2'

FENCING NOTES:

1. ALL FENCING FABRIC SHALL BE NO. 9 GAUGE FINISHED STEEL WIRES WITH GALVANIZED ZINC COATING
2. ALL POSTS, RAILS, BRACES, POST TOPS, STRETCHER BARS, BANDS, ETC. SHALL BE GALVANIZED FINISH
3. TENSION WIRES AND WIRE TIES SHALL INCLUDE A GALVANIZED ZINC COATING
4. MAXIMUM POST SPACING: 10' ON CENTER

4 / F250 CHAINLINK FENCING SCHEDULE

NOT TO SCALE

7 / F250 NOT USED

NOT TO SCALE

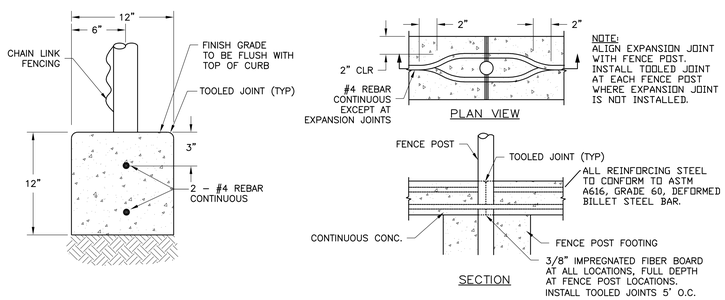

2 / F250 CONCRETE CURB AND EXPANSION JOINT

NOT TO SCALE

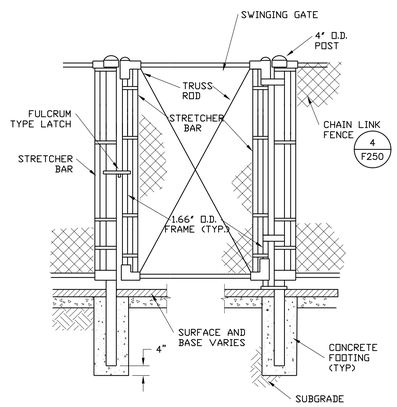

5 / F250 SINGLE SWING GATE

NOT TO SCALE

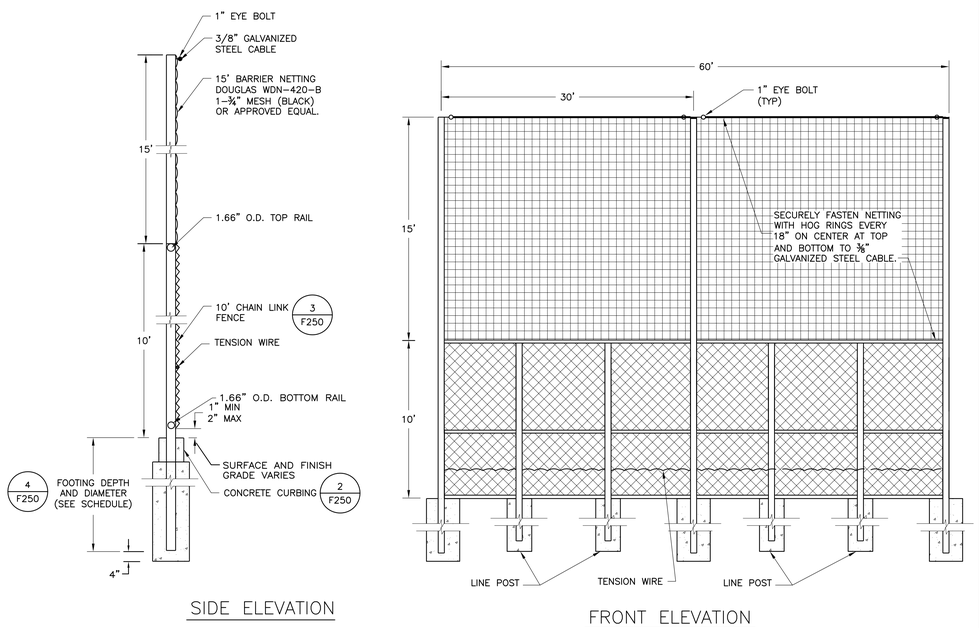

8 / F250 10' CHAIN LINK FENCE WITH 15' NETTING

NOT TO SCALE

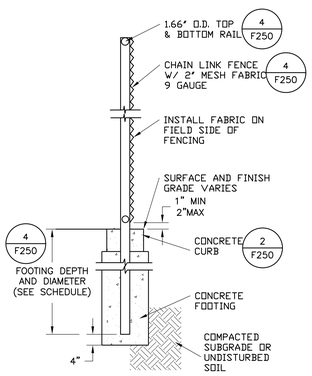

3 / F250 CHAINLINK FENCE SECTION

NOT TO SCALE

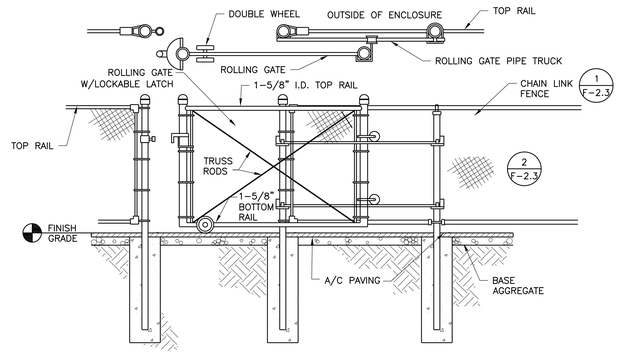

6 / F250 SINGLE ROLLING GATE

NOT TO SCALE

NORTH

Ravensdale Park

Ravensdale, Washington

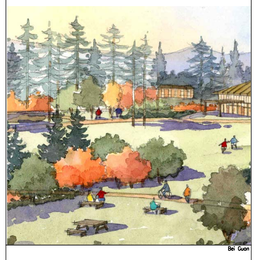

JONES JONES
105 SOUTH MAIN ST
SUITE 300
SEATTLE WA 98104

Ravensdale Park Fund

&

King County
Parks and Recreation Div.
201 S. Jackson St.
Suite 700
Seattle, WA 98104

DA HOGAN
119 1st Avenue South, Suite 110
Seattle, Washington 98104
p. 206.285.0400
f. 206.285.0480

PERMIT SET

DAVID L. ANDERSON
STATE OF WASHINGTON
DIGITAL REGISTERED PROFESSIONAL ENGINEER
EXPIRES 8/1/11

DATE: JANUARY 2011

REVISIONS:

FENCING DETAILS

SCALE: NTS

0 FEET

DRAWN BY: CPW/EJG

CHECKED BY: DLA/EJG

JOB NO.: 21101.109

SHEET NO.: F250

All drawings and written material appearing herein constitute the original and unpublished work of the architect and the same may not be duplicated, used, or disclosed without the written consent of the architect © Jones & Jones