Appendix F

Structural Calculations

Prepared for

KING COUNTY, WASHINGTON

EAST LAKE SAMMAMISH TRAIL
MASTER PLAN TRAIL
NORTH SAMMAMISH SEGMENT

SOLDIER PILE WALL

DESIGN CALCULATIONS

SHANE L. BROWN
STATE OF WASHINGTON
49149
REGISTERED
PROFESSIONAL ENGINEER

1/15/13

January, 2013

Parametrix ENGINEERING • PLANNING • ENVIRONMENTAL SCIENCES

inspired people
inspired solutions
making a difference

EAST LAKE SAMMAMISH TRAIL
MASTER PLAN TRAIL
NORTH SAMMAMISH SEGMENT

SOLDIER PILE WALL
DESIGN CALCULATIONS

Table of Contents

Description	***Pages***
Soldier Pile Design	1 to 24
Concrete Fascia Design	25 to 34
Temporary Lagging Design	35

PMX Job Number:	***Prepared By:***	***Checked By:***	***Date:***
554-1521-075	S. Brown		January, 2013

Parametrix

PROJECT EAST - N. Segment SHEET 1 OF

BY S. Brown DATE CHECKED DATE

SUBJECT Soldier Pile Wall JOB NO. 554-1521-075 PHASE TASK

Loading Diagram (See Fig. 29 From Geo Tech Report On Next Page)
(Soldier Pile)

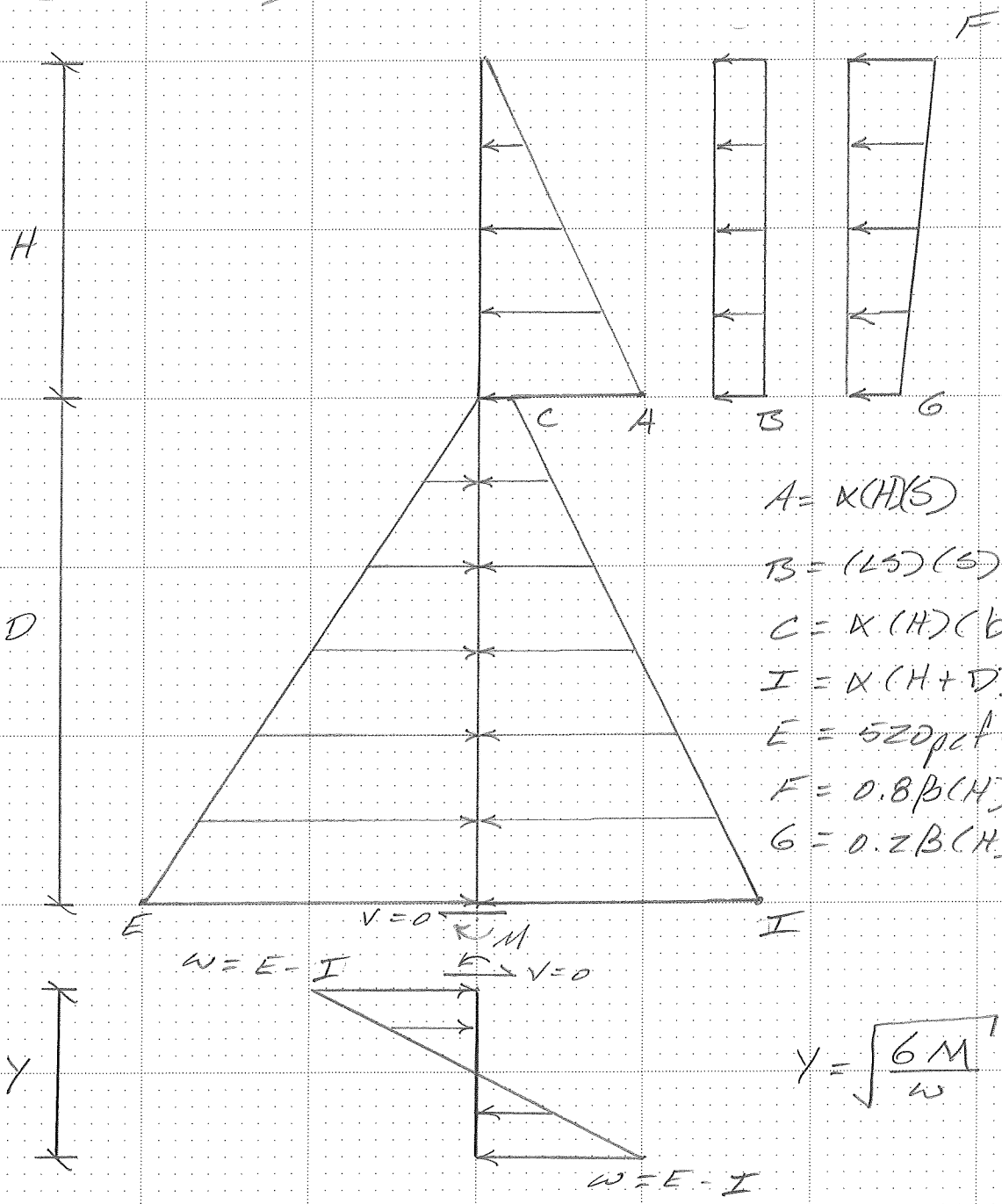

$A = \alpha(H)(S)$

$B = (LS)(S)$

$C = \alpha(H)(bp)$

$I = \alpha(H+D)(bp)$

$E = 520\,pcf\,(D)\,2.5\,(bp)$

$F = 0.8\beta(H)(S)$

$G = 0.2\beta(H)(S)$

$$Y = \sqrt{\frac{6M}{\omega}}$$

2

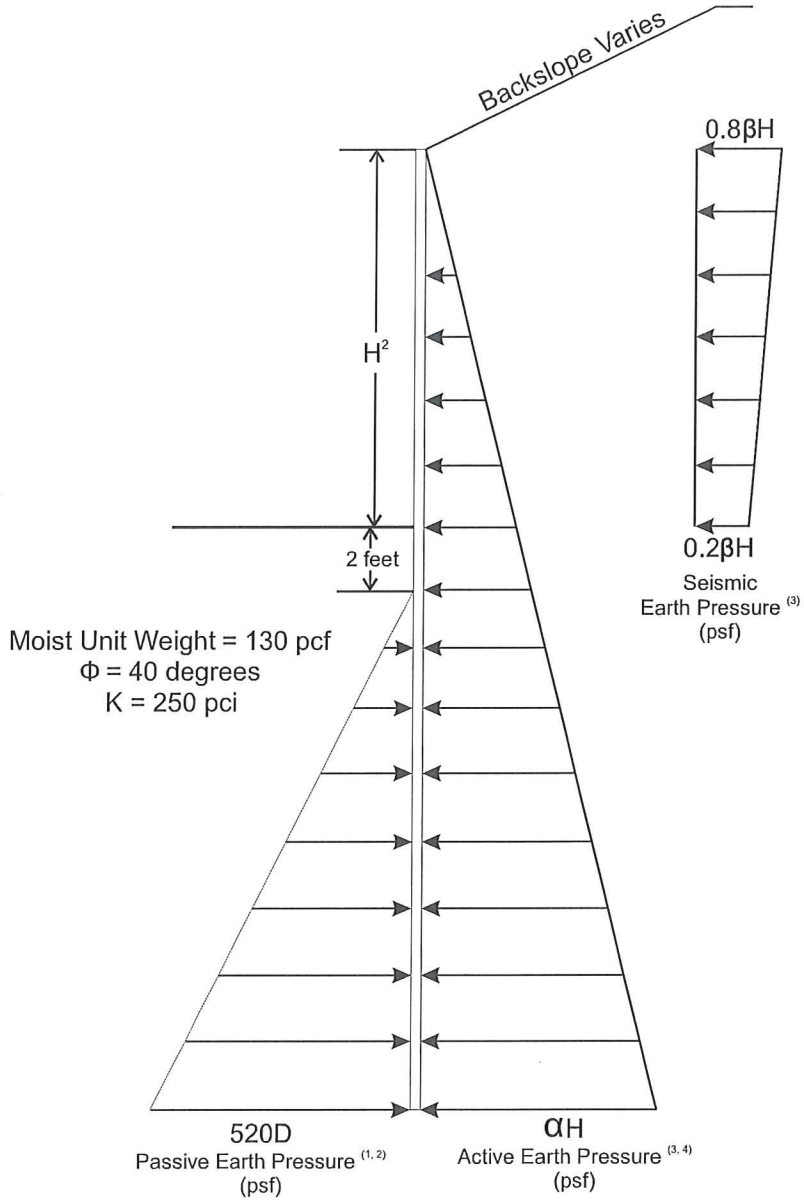

Backslope Condition	α	β
Level	35	18
5H:1V	40	20
2H:1V	52	26
1.5H:1V	77	38

(H:V - horizontal to vertical)

Limit State	Passive Resistance Factor
Strength	0.75
Service	1.0
Extreme	1.0

NOTES
1) Passive earth pressure shown in an ultimate (unfactored) value and should be applied over 2½ times the soldier pile diameter using the appropriate resistance factor.
2) Passive earth pressure and wall height should start 2 feet below the ground surface. No ground water is assumed.
3) Active and seismic earth pressures act over the pile spacing above the base of the wall.
4) Active earth pressures act over one pile diameter below the base of the wall.

psf = pounds per square foot; pcf = pounds per cubic foot; pci = pounds per cubic inch

Soldier Pile Wall
Earth Pressure Diagram - Figure 29

GIVEN

$\alpha := 52pcf$ Active Soil Pressure Per Fig. 29 in Geotech Report

$\beta := 26pcf$ Seismic Soil Pressure Per Fig. 29 in Geotech Report

$LS := 2ft \cdot \alpha = 104 \cdot psf$ Live Load Surcharge Behind Wall

$b_p := 2ft$ Diameter of Prebored Grouted Pile Hole

$S := 6ft$ Pile Spacing

$H := 11.5ft$ Height of Wall (Bottom of Lagging to Top of FG Behind Wall)

$S_x := 131in^3$ Section Modulus of HP14x89

$F_y := 50ksi$ Yield Strength of Pile

CASE 1 = EQ + 1.5(EA) + 1.0(EP)

$D := 6.591ft$ Assumed Depth to Zero Shear

Unfactored Loading

$A := \alpha \cdot H \cdot S = 3588 \cdot plf$

$C := \alpha \cdot (H) \cdot (b_p) = 1196 \cdot plf$

$I := \alpha \cdot (H + D) \cdot (b_p) = 1881.46 \cdot plf$

$E := 520pcf \cdot (D) \cdot (2.5 \cdot b_p) = 17136.6 \cdot plf$

$F := 0.8 \cdot \beta \cdot (H) \cdot (S) = 1435.2 \cdot plf$

$G := 0.2 \cdot \beta \cdot (H) \cdot (S) = 358.8 \cdot plf$

Check ΣVu = 0 at D

$V_{EA} := 0.5 \cdot A \cdot H + 0.5 \cdot (C + I) \cdot D = 30772.78 \cdot lbf$

$V_{EP} := 0.5 \cdot E \cdot D = 56473.67 \cdot lbf$

$V_{EQ} := 0.5 \cdot (F + G) \cdot H = 10315.5 \cdot lbf$

$\Sigma Vu := 1.0 \cdot V_{EQ} + 1.5 \cdot V_{EA} - 1.0 \cdot V_{EP} = 1.01 \cdot lbf$ ΣVu almost = 0, (OK)

Check Maximum Flexural Stresses

$$M_{EA} := 0.5 \cdot A \cdot H \cdot \left(\frac{H}{3} + D\right) + C \cdot D \cdot \left(\frac{D}{2}\right) + 0.5(I - C) \cdot (D) \cdot \left(\frac{D}{3}\right) = 246005.21 \cdot lbf \cdot ft$$

$$M_{EP} := 0.5 \cdot E \cdot D \cdot \left(\frac{D}{3}\right) = 124072.64 \cdot lbf \cdot ft$$

$$M_{EQ} := G \cdot H \cdot \left(\frac{H}{2} + D\right) + 0.5(F - G)H \cdot \left(\frac{2 \cdot H}{3} + D\right) = 139166.41 \cdot lbf \cdot ft$$

$$M_u := 1.0 \cdot M_{EQ} + 1.5 \cdot M_{EA} - 1.0 \cdot M_{EP} = 384101.59 \cdot lbf \cdot ft$$

$$F_{bu} := \frac{M_u}{S_x} = 35.18 \cdot ksi$$

$$\phi F_y := 0.9 \cdot (F_y) = 45 \cdot ksi$$ Fbu < ϕFy, (OK)

Determine Required Additonal Depth of Embedment to Resist Toe Kick Out

$$\omega_u := 1.0(E) - 1.5(I) = 14314.4 \cdot plf$$

$$Y := \sqrt{\frac{6 \cdot M_u}{\omega_u}} = 12.69 \cdot ft$$

Determine Total Depth of Embedment Required Case 1

$$D_1 := D + Y = 19.28 \cdot ft$$

CASE 2 = 1.75(LS) + 1.5(EA) + 0.75(EP)

$D := 8.036ft$ Assumed Depth to Zero Shear

Unfactored Loading

$$A := \alpha \cdot H \cdot S = 3588 \cdot plf$$

$$B := (LS) \cdot S = 624 \cdot plf$$

$$C := \alpha \cdot (H) \cdot (b_p) = 1196 \cdot plf$$

$$I := \alpha \cdot (H + D) \cdot (b_p) = 2031.74 \cdot plf$$

$$E := 520pcf \cdot (D) \cdot (2.5 \cdot b_p) = 20893.6 \cdot plf$$

Check ΣVu = 0 at D

$V_{EA} := 0.5 \cdot A \cdot H + 0.5 \cdot (C + I) \cdot D = 33600.08 \cdot lbf$

$V_{EP} := 0.5 \cdot E \cdot D = 83950.48 \cdot lbf$

$V_{LS} := B \cdot H = 7176 \cdot lbf$

$\Sigma Vu := 1.75 \cdot V_{LS} + 1.5 \cdot V_{EA} - 0.75 \cdot V_{EP} = -4.75 \cdot lbf$ ΣVu almost = 0, (OK)

Check Maximum Flexural Stresses

$M_{EA} := 0.5 \cdot A \cdot H \cdot \left(\frac{H}{3} + D\right) + C \cdot D \cdot \left(\frac{D}{2}\right) + 0.5(I - C) \cdot (D) \cdot \left(\frac{D}{3}\right) = 292488.45 \cdot lbf \cdot ft$

$M_{EP} := 0.5 \cdot E \cdot D \cdot \left(\frac{D}{3}\right) = 224875.37 \cdot lbf \cdot ft$

$M_{LS} := B \cdot H \cdot \left(\frac{H}{2} + D\right) = 98928.34 \cdot lbf \cdot ft$

$M_u := 1.75 \cdot M_{LS} + 1.5 \cdot M_{EA} - 0.75 \cdot M_{EP} = 443200.74 \cdot lbf \cdot ft$

$F_{bu} := \frac{M_u}{S_x} = 40.6 \cdot ksi$

$\phi F_y := 0.9 \cdot (F_y) = 45 \cdot ksi$ Fbu < ϕFy, (OK)

Determine Required Additonal Depth of Embedment to Resist Toe Kick Out

$\omega_u := 0.75E - 1.5I = 12622.58 \cdot plf$

$Y := \sqrt{\frac{6 \cdot M_u}{\omega_u}} = 14.51 \cdot ft$

Determine Total Depth of Embedment Required Case 2

$D_2 := D + Y = 22.55 \cdot ft$

GIVEN

$\alpha := 52pcf$ Active Soil Pressure Per Fig. 29 in Geotech Report

$\beta := 26pcf$ Seismic Soil Pressure Per Fig. 29 in Geotech Report

$LS := 2ft \cdot \alpha = 104 \cdot psf$ Live Load Surcharge Behind Wall

$b_p := 2ft$ Diameter of Prebored Grouted Pile Hole

$S := 6ft$ Pile Spacing

$H := 10.5ft$ Height of Wall (Bottom of Lagging to Top of FG Behind Wall)

$S_x := 131in^3$ Section Modulus of HP14x89

$F_y := 50ksi$ Yield Strength of Pile

CASE 1 = EQ + 1.5(EA) + 1.0(EP)

$D := 6.018ft$ Assumed Depth to Zero Shear

Unfactored Loading

$A := \alpha \cdot H \cdot S = 3276 \cdot plf$

$C := \alpha \cdot (H) \cdot (b_p) = 1092 \cdot plf$

$I := \alpha \cdot (H + D) \cdot (b_p) = 1717.87 \cdot plf$

$E := 520pcf \cdot (D) \cdot (2.5 \cdot b_p) = 15646.8 \cdot plf$

$F := 0.8 \cdot \beta \cdot (H) \cdot (S) = 1310.4 \cdot plf$

$G := 0.2 \cdot \beta \cdot (H) \cdot (S) = 327.6 \cdot plf$

Check ΣVu = 0 at D

$V_{EA} := 0.5 \cdot A \cdot H + 0.5 \cdot (C + I) \cdot D = 25653.9 \cdot lbf$

$V_{EP} := 0.5 \cdot E \cdot D = 47081.22 \cdot lbf$

$V_{EQ} := 0.5 \cdot (F + G) \cdot H = 8599.5 \cdot lbf$

$\Sigma Vu := 1.0 \cdot V_{EQ} + 1.5 \cdot V_{EA} - 1.0 \cdot V_{EP} = -0.86 \cdot lbf$ ΣVu almost = 0, (OK)

Check Maximum Flexural Stresses

$$M_{EA} := 0.5 \cdot A \cdot H \cdot \left(\frac{H}{3} + D\right) + C \cdot D \cdot \left(\frac{D}{2}\right) + 0.5(I - C) \cdot (D) \cdot \left(\frac{D}{3}\right) = 187251.99 \cdot lbf \cdot ft$$

$$M_{EP} := 0.5 \cdot E \cdot D \cdot \left(\frac{D}{3}\right) = 94444.93 \cdot lbf \cdot ft$$

$$M_{EQ} := G \cdot H \cdot \left(\frac{H}{2} + D\right) + 0.5(F - G)H \cdot \left(\frac{2 \cdot H}{3} + D\right) = 105928.64 \cdot lbf \cdot ft$$

$$M_u := 1.0 \cdot M_{EQ} + 1.5 \cdot M_{EA} - 1.0 \cdot M_{EP} = 292361.7 \cdot lbf \cdot ft$$

$$F_{bu} := \frac{M_u}{S_x} = 26.78 \cdot ksi$$

$$\phi F_y := 0.9 \cdot (F_y) = 45 \cdot ksi$$ Fbu < ϕFy, (OK)

Determine Required Additonal Depth of Embedment to Resist Toe Kick Out

$$\omega_u := 1.0(E) - 1.5(I) = 13069.99 \cdot plf$$

$$Y := \sqrt{\frac{6 \cdot M_u}{\omega_u}} = 11.59 \cdot ft$$

Determine Total Depth of Embedment Required Case 1

$$D_1 := D + Y = 17.6 \cdot ft$$

CASE 2 = 1.75(LS) + 1.5(EA) + 0.75(EP)

$D := 7.423ft$ Assumed Depth to Zero Shear

Unfactored Loading

$$A := \alpha \cdot H \cdot S = 3276 \cdot plf$$

$$B := (LS) \cdot S = 624 \cdot plf$$

$$C := \alpha \cdot (H) \cdot (b_p) = 1092 \cdot plf$$

$$I := \alpha \cdot (H + D) \cdot (b_p) = 1863.99 \cdot plf$$

$$E := 520pcf \cdot (D) \cdot (2.5 \cdot b_p) = 19299.8 \cdot plf$$

Check ΣVu = 0 at D

$V_{EA} := 0.5 \cdot A \cdot H + 0.5 \cdot (C + I) \cdot D = 28170.16 \cdot lbf$

$V_{EP} := 0.5 \cdot E \cdot D = 71631.21 \cdot lbf$

$V_{LS} := B \cdot H = 6552 \cdot lbf$

$\Sigma Vu := 1.75 \cdot V_{LS} + 1.5 \cdot V_{EA} - 0.75 \cdot V_{EP} = -2.16 \cdot lbf$ ΣVu almost = 0, (OK)

Check Maximum Flexural Stresses

$M_{EA} := 0.5 \cdot A \cdot H \cdot \left(\frac{H}{3} + D\right) + C \cdot D \cdot \left(\frac{D}{2}\right) + 0.5(I - C) \cdot (D) \cdot \left(\frac{D}{3}\right) = 225039.36 \cdot lbf \cdot ft$

$M_{EP} := 0.5 \cdot E \cdot D \cdot \left(\frac{D}{3}\right) = 177239.48 \cdot lbf \cdot ft$

$M_{LS} := B \cdot H \cdot \left(\frac{H}{2} + D\right) = 83033.5 \cdot lbf \cdot ft$

$M_u := 1.75 \cdot M_{LS} + 1.5 \cdot M_{EA} - 0.75 \cdot M_{EP} = 349938.05 \cdot lbf \cdot ft$

$F_{bu} := \frac{M_u}{S_x} = 32.1 \cdot ksi$

$\phi F_y := 0.9 \cdot (F_y) = 45 \cdot ksi$ Fbu < ϕFy, (OK)

Determine Required Additonal Depth of Embedment to Resist Toe Kick Out

$\omega_u := 0.75E - 1.5I = 11678.86 \cdot plf$

$Y := \sqrt{\frac{6 \cdot M_u}{\omega_u}} = 13.41 \cdot ft$

Determine Total Depth of Embedment Required Case 2

$D_2 := D + Y = 20.83 \cdot ft$

GIVEN

$\alpha := 52pcf$ Active Soil Pressure Per Fig. 29 in Geotech Report

$\beta := 26pcf$ Seismic Soil Pressure Per Fig. 29 in Geotech Report

$LS := 2ft \cdot \alpha = 104 \cdot psf$ Live Load Surcharge Behind Wall

$b_p := 2ft$ Diameter of Prebored Grouted Pile Hole

$S := 6ft$ Pile Spacing

$H := 9.5ft$ Height of Wall (Bottom of Lagging to Top of FG Behind Wall)

$S_x := 131in^3$ Section Modulus of HP14x89

$F_y := 50ksi$ Yield Strength of Pile

CASE 1 = EQ + 1.5(EA) + 1.0(EP)

$D := 5.445ft$ Assumed Depth to Zero Shear

Unfactored Loading

$A := \alpha \cdot H \cdot S = 2964 \cdot plf$

$C := \alpha \cdot (H) \cdot (b_p) = 988 \cdot plf$

$I := \alpha \cdot (H + D) \cdot (b_p) = 1554.28 \cdot plf$

$E := 520pcf \cdot (D) \cdot (2.5 \cdot b_p) = 14157 \cdot plf$

$F := 0.8 \cdot \beta \cdot (H) \cdot (S) = 1185.6 \cdot plf$

$G := 0.2 \cdot \beta \cdot (H) \cdot (S) = 296.4 \cdot plf$

Check ΣVu = 0 at D

$V_{EA} := 0.5 \cdot A \cdot H + 0.5 \cdot (C + I) \cdot D = 21000.36 \cdot lbf$

$V_{EP} := 0.5 \cdot E \cdot D = 38542.43 \cdot lbf$

$V_{EQ} := 0.5 \cdot (F + G) \cdot H = 7039.5 \cdot lbf$

$\Sigma Vu := 1.0 \cdot V_{EQ} + 1.5 \cdot V_{EA} - 1.0 \cdot V_{EP} = -2.4 \cdot lbf$ ΣVu almost = 0, (OK)

Check Maximum Flexural Stresses

$$M_{EA} := 0.5 \cdot A \cdot H \cdot \left(\frac{H}{3} + D\right) + C \cdot D \cdot \left(\frac{D}{2}\right) + 0.5(I - C) \cdot (D) \cdot \left(\frac{D}{3}\right) = 138687.96 \cdot lbf \cdot ft$$

$$M_{EP} := 0.5 \cdot E \cdot D \cdot \left(\frac{D}{3}\right) = 69954.51 \cdot lbf \cdot ft$$

$$M_{EQ} := G \cdot H \cdot \left(\frac{H}{2} + D\right) + 0.5(F - G)H \cdot \left(\frac{2 \cdot H}{3} + D\right) = 78455.23 \cdot lbf \cdot ft$$

$$M_u := 1.0 \cdot M_{EQ} + 1.5 \cdot M_{EA} - 1.0 \cdot M_{EP} = 216532.65 \cdot lbf \cdot ft$$

$$F_{bu} := \frac{M_u}{S_x} = 19.84 \cdot ksi$$

$$\phi F_y := 0.9 \cdot (F_y) = 45 \cdot ksi$$ Fbu < ϕFy, (OK)

Determine Required Additonal Depth of Embedment to Resist Toe Kick Out

$$\omega_u := 1.0(E) - 1.5(I) = 11825.58 \cdot plf$$

$$Y := \sqrt{\frac{6 \cdot M_u}{\omega_u}} = 10.48 \cdot ft$$

Determine Total Depth of Embedment Required Case 1

$$D_1 := D + Y = 15.93 \cdot ft$$

CASE 2 = 1.75(LS) + 1.5(EA) + 0.75(EP)

$D := 6.809ft$ Assumed Depth to Zero Shear

Unfactored Loading

$$A := \alpha \cdot H \cdot S = 2964 \cdot plf$$

$$B := (LS) \cdot S = 624 \cdot plf$$

$$C := \alpha \cdot (H) \cdot (b_p) = 988 \cdot plf$$

$$I := \alpha \cdot (H + D) \cdot (b_p) = 1696.14 \cdot plf$$

$$E := 520pcf \cdot (D) \cdot (2.5 \cdot b_p) = 17703.4 \cdot plf$$

Check ΣVu = 0 at D

$V_{EA} := 0.5 \cdot A \cdot H + 0.5 \cdot (C + I) \cdot D = 23217.14 \cdot lbf$

$V_{EP} := 0.5 \cdot E \cdot D = 60271.23 \cdot lbf$

$V_{LS} := B \cdot H = 5928 \cdot lbf$

$\Sigma Vu := 1.75 \cdot V_{LS} + 1.5 \cdot V_{EA} - 0.75 \cdot V_{EP} = -3.71 \cdot lbf$ ΣVu almost = 0, (OK)

Check Maximum Flexural Stresses

$M_{EA} := 0.5 \cdot A \cdot H \cdot \left(\frac{H}{3} + D\right) + C \cdot D \cdot \left(\frac{D}{2}\right) + 0.5(I - C) \cdot (D) \cdot \left(\frac{D}{3}\right) = 168822.3 \cdot lbf \cdot ft$

$M_{EP} := 0.5 \cdot E \cdot D \cdot \left(\frac{D}{3}\right) = 136795.59 \cdot lbf \cdot ft$

$M_{LS} := B \cdot H \cdot \left(\frac{H}{2} + D\right) = 68521.75 \cdot lbf \cdot ft$

$M_u := 1.75 \cdot M_{LS} + 1.5 \cdot M_{EA} - 0.75 \cdot M_{EP} = 270549.82 \cdot lbf \cdot ft$

$F_{bu} := \frac{M_u}{S_x} = 24.8 \cdot ksi$

$\phi F_y := 0.9 \cdot (F_y) = 45 \cdot ksi$ Fbu < ϕFy, (OK)

Determine Required Additonal Depth of Embedment to Resist Toe Kick Out

$\omega_u := 0.75E - 1.5I = 10733.35 \cdot plf$

$Y := \sqrt{\frac{6 \cdot M_u}{\omega_u}} = 12.3 \cdot ft$

Determine Total Depth of Embedment Required Case 2

$D_2 := D + Y = 19.11 \cdot ft$

GIVEN

$\alpha := 52pcf$ Active Soil Pressure Per Fig. 29 in Geotech Report

$\beta := 26pcf$ Seismic Soil Pressure Per Fig. 29 in Geotech Report

$LS := 2ft \cdot \alpha = 104 \cdot psf$ Live Load Surcharge Behind Wall

$b_p := 2ft$ Diameter of Prebored Grouted Pile Hole

$S := 6ft$ Pile Spacing

$H := 8.5ft$ Height of Wall (Bottom of Lagging to Top of FG Behind Wall)

$S_x := 131in^3$ Section Modulus of HP14x89

$F_y := 50ksi$ Yield Strength of Pile

CASE 1 = EQ + 1.5(EA) + 1.0(EP)

$D := 4.872ft$ Assumed Depth to Zero Shear

Unfactored Loading

$A := \alpha \cdot H \cdot S = 2652 \cdot plf$

$C := \alpha \cdot (H) \cdot (b_p) = 884 \cdot plf$

$I := \alpha \cdot (H + D) \cdot (b_p) = 1390.69 \cdot plf$

$E := 520pcf \cdot (D) \cdot (2.5 \cdot b_p) = 12667.2 \cdot plf$

$F := 0.8 \cdot \beta \cdot (H) \cdot (S) = 1060.8 \cdot plf$

$G := 0.2 \cdot \beta \cdot (H) \cdot (S) = 265.2 \cdot plf$

Check ΣVu = 0 at D

$V_{EA} := 0.5 \cdot A \cdot H + 0.5 \cdot (C + I) \cdot D = 16812.14 \cdot lbf$

$V_{EP} := 0.5 \cdot E \cdot D = 30857.3 \cdot lbf$

$V_{EQ} := 0.5 \cdot (F + G) \cdot H = 5635.5 \cdot lbf$

$\Sigma Vu := 1.0 \cdot V_{EQ} + 1.5 \cdot V_{EA} - 1.0 \cdot V_{EP} = -3.59 \cdot lbf$ ΣVu almost = 0, (OK)

Check Maximum Flexural Stresses

$$M_{EA} := 0.5 \cdot A \cdot H \cdot \left(\frac{H}{3} + D\right) + C \cdot D \cdot \left(\frac{D}{2}\right) + 0.5(I - C) \cdot (D) \cdot \left(\frac{D}{3}\right) = 99342.78 \cdot lbf \cdot ft$$

$$M_{EP} := 0.5 \cdot E \cdot D \cdot \left(\frac{D}{3}\right) = 50112.25 \cdot lbf \cdot ft$$

$$M_{EQ} := G \cdot H \cdot \left(\frac{H}{2} + D\right) + 0.5(F - G)H \cdot \left(\frac{2 \cdot H}{3} + D\right) = 56197.21 \cdot lbf \cdot ft$$

$$M_u := 1.0 \cdot M_{EQ} + 1.5 \cdot M_{EA} - 1.0 \cdot M_{EP} = 155099.13 \cdot lbf \cdot ft$$

$$F_{bu} := \frac{M_u}{S_x} = 14.21 \cdot ksi$$

$$\phi F_y := 0.9 \cdot (F_y) = 45 \cdot ksi$$ Fbu < ϕFy, (OK)

Determine Required Additonal Depth of Embedment to Resist Toe Kick Out

$$\omega_u := 1.0(E) - 1.5(I) = 10581.17 \cdot plf$$

$$Y := \sqrt{\frac{6 \cdot M_u}{\omega_u}} = 9.38 \cdot ft$$

Determine Total Depth of Embedment Required Case 1

$$D_1 := D + Y = 14.25 \cdot ft$$

CASE 2 = 1.75(LS) + 1.5(EA) + 0.75(EP)

$D := 6.193ft$ Assumed Depth to Zero Shear

Unfactored Loading

$$A := \alpha \cdot H \cdot S = 2652 \cdot plf$$

$$B := (LS) \cdot S = 624 \cdot plf$$

$$C := \alpha \cdot (H) \cdot (b_p) = 884 \cdot plf$$

$$I := \alpha \cdot (H + D) \cdot (b_p) = 1528.07 \cdot plf$$

$$E := 520pcf \cdot (D) \cdot (2.5 \cdot b_p) = 16101.8 \cdot plf$$

Check ΣVu = 0 at D

$V_{EA} := 0.5 \cdot A \cdot H + 0.5 \cdot (C + I) \cdot D = 18739.98 \cdot lbf$

$V_{EP} := 0.5 \cdot E \cdot D = 49859.22 \cdot lbf$

$V_{LS} := B \cdot H = 5304 \cdot lbf$

$\Sigma Vu := 1.75 \cdot V_{LS} + 1.5 \cdot V_{EA} - 0.75 \cdot V_{EP} = -2.45 \cdot lbf$ ΣVu almost = 0, (OK)

Check Maximum Flexural Stresses

$M_{EA} := 0.5 \cdot A \cdot H \cdot \left(\frac{H}{3} + D\right) + C \cdot D \cdot \left(\frac{D}{2}\right) + 0.5(I - C) \cdot (D) \cdot \left(\frac{D}{3}\right) = 122804.98 \cdot lbf \cdot ft$

$M_{EP} := 0.5 \cdot E \cdot D \cdot \left(\frac{D}{3}\right) = 102926.06 \cdot lbf \cdot ft$

$M_{LS} := B \cdot H \cdot \left(\frac{H}{2} + D\right) = 55389.67 \cdot lbf \cdot ft$

$M_u := 1.75 \cdot M_{LS} + 1.5 \cdot M_{EA} - 0.75 \cdot M_{EP} = 203944.85 \cdot lbf \cdot ft$

$F_{bu} := \frac{M_u}{S_x} = 18.7 \cdot ksi$

$\phi F_y := 0.9 \cdot (F_y) = 45 \cdot ksi$ Fbu < ϕFy, (OK)

Determine Required Additonal Depth of Embedment to Resist Toe Kick Out

$\omega_u := 0.75E - 1.5I = 9784.24 \cdot plf$

$Y := \sqrt{\frac{6 \cdot M_u}{\omega_u}} = 11.18 \cdot ft$

Determine Total Depth of Embedment Required Case 2

$D_2 := D + Y = 17.38 \cdot ft$

GIVEN

$\alpha := 52pcf$ Active Soil Pressure Per Fig. 29 in Geotech Report

$\beta := 26pcf$ Seismic Soil Pressure Per Fig. 29 in Geotech Report

$LS := 2ft \cdot \alpha = 104 \cdot psf$ Live Load Surcharge Behind Wall

$b_p := 2ft$ Diameter of Prebored Grouted Pile Hole

$S := 6ft$ Pile Spacing

$H := 7.5ft$ Height of Wall (Bottom of Lagging to Top of FG Behind Wall)

$S_x := 131in^3$ Section Modulus of HP14x89

$F_y := 50ksi$ Yield Strength of Pile

CASE 1 = EQ + 1.5(EA) + 1.0(EP)

$D := 4.299ft$ Assumed Depth to Zero Shear

Unfactored Loading

$A := \alpha \cdot H \cdot S = 2340 \cdot plf$

$C := \alpha \cdot (H) \cdot (b_p) = 780 \cdot plf$

$I := \alpha \cdot (H + D) \cdot (b_p) = 1227.1 \cdot plf$

$E := 520pcf \cdot (D) \cdot (2.5 \cdot b_p) = 11177.4 \cdot plf$

$F := 0.8 \cdot \beta \cdot (H) \cdot (S) = 936 \cdot plf$

$G := 0.2 \cdot \beta \cdot (H) \cdot (S) = 234 \cdot plf$

Check ΣVu = 0 at D

$V_{EA} := 0.5 \cdot A \cdot H + 0.5 \cdot (C + I) \cdot D = 13089.25 \cdot lbf$

$V_{EP} := 0.5 \cdot E \cdot D = 24025.82 \cdot lbf$

$V_{EQ} := 0.5 \cdot (F + G) \cdot H = 4387.5 \cdot lbf$

$\Sigma Vu := 1.0 \cdot V_{EQ} + 1.5 \cdot V_{EA} - 1.0 \cdot V_{EP} = -4.44 \cdot lbf$ ΣVu almost = 0, (OK)

Check Maximum Flexural Stresses

$$M_{EA} := 0.5 \cdot A \cdot H \cdot \left(\frac{H}{3} + D\right) + C \cdot D \cdot \left(\frac{D}{2}\right) + 0.5(I - C) \cdot (D) \cdot \left(\frac{D}{3}\right) = 68246.13 \cdot lbf \cdot ft$$

$$M_{EP} := 0.5 \cdot E \cdot D \cdot \left(\frac{D}{3}\right) = 34429 \cdot lbf \cdot ft$$

$$M_{EQ} := G \cdot H \cdot \left(\frac{H}{2} + D\right) + 0.5(F - G)H \cdot \left(\frac{2 \cdot H}{3} + D\right) = 38605.61 \cdot lbf \cdot ft$$

$$M_u := 1.0 \cdot M_{EQ} + 1.5 \cdot M_{EA} - 1.0 \cdot M_{EP} = 106545.81 \cdot lbf \cdot ft$$

$$F_{bu} := \frac{M_u}{S_x} = 9.76 \cdot ksi$$

$$\phi F_y := 0.9 \cdot (F_y) = 45 \cdot ksi$$ Fbu < ϕFy, (OK)

Determine Required Additonal Depth of Embedment to Resist Toe Kick Out

$$\omega_u := 1.0(E) - 1.5(I) = 9336.76 \cdot plf$$

$$Y := \sqrt{\frac{6 \cdot M_u}{\omega_u}} = 8.27 \cdot ft$$

Determine Total Depth of Embedment Required Case 1

$$D_1 := D + Y = 12.57 \cdot ft$$

CASE 2 = 1.75(LS) + 1.5(EA) + 0.75(EP)

$D := 5.575ft$ Assumed Depth to Zero Shear

Unfactored Loading

$$A := \alpha \cdot H \cdot S = 2340 \cdot plf$$

$$B := (LS) \cdot S = 624 \cdot plf$$

$$C := \alpha \cdot (H) \cdot (b_p) = 780 \cdot plf$$

$$I := \alpha \cdot (H + D) \cdot (b_p) = 1359.8 \cdot plf$$

$$E := 520pcf \cdot (D) \cdot (2.5 \cdot b_p) = 14495 \cdot plf$$

Check ΣVu = 0 at D

$V_{EA} := 0.5 \cdot A \cdot H + 0.5 \cdot (C + I) \cdot D = 14739.69 \cdot lbf$

$V_{EP} := 0.5 \cdot E \cdot D = 40404.81 \cdot lbf$

$V_{LS} := B \cdot H = 4680 \cdot lbf$

$\Sigma Vu := 1.75 \cdot V_{LS} + 1.5 \cdot V_{EA} - 0.75 \cdot V_{EP} = -4.07 \cdot lbf$ ΣVu almost = 0, (OK)

Check Maximum Flexural Stresses

$M_{EA} := 0.5 \cdot A \cdot H \cdot \left(\frac{H}{3} + D\right) + C \cdot D \cdot \left(\frac{D}{2}\right) + 0.5(I - C) \cdot (D) \cdot \left(\frac{D}{3}\right) = 85982.99 \cdot lbf \cdot ft$

$M_{EP} := 0.5 \cdot E \cdot D \cdot \left(\frac{D}{3}\right) = 75085.61 \cdot lbf \cdot ft$

$M_{LS} := B \cdot H \cdot \left(\frac{H}{2} + D\right) = 43641 \cdot lbf \cdot ft$

$M_u := 1.75 \cdot M_{LS} + 1.5 \cdot M_{EA} - 0.75 \cdot M_{EP} = 149032.03 \cdot lbf \cdot ft$

$F_{bu} := \frac{M_u}{S_x} = 13.7 \cdot ksi$

$\phi F_y := 0.9 \cdot (F_y) = 45 \cdot ksi$ Fbu < ϕFy, (OK)

Determine Required Additonal Depth of Embedment to Resist Toe Kick Out

$\omega_u := 0.75E - 1.5I = 8831.55 \cdot plf$

$Y := \sqrt{\frac{6 \cdot M_u}{\omega_u}} = 10.06 \cdot ft$

Determine Total Depth of Embedment Required Case 2

$D_2 := D + Y = 15.64 \cdot ft$

GIVEN

$\alpha := 52pcf$ Active Soil Pressure Per Fig. 29 in Geotech Report

$\beta := 26pcf$ Seismic Soil Pressure Per Fig. 29 in Geotech Report

$LS := 2ft \cdot \alpha = 104 \cdot psf$ Live Load Surcharge Behind Wall

$b_p := 2ft$ Diameter of Prebored Grouted Pile Hole

$S := 6ft$ Pile Spacing

$H := 6.5ft$ Height of Wall (Bottom of Lagging to Top of FG Behind Wall)

$S_x := 131in^3$ Section Modulus of HP14x89

$F_y := 50ksi$ Yield Strength of Pile

CASE 1 = EQ + 1.5(EA) + 1.0(EP)

$D := 3.726ft$ Assumed Depth to Zero Shear

Unfactored Loading

$A := \alpha \cdot H \cdot S = 2028 \cdot plf$

$C := \alpha \cdot (H) \cdot (b_p) = 676 \cdot plf$

$I := \alpha \cdot (H + D) \cdot (b_p) = 1063.5 \cdot plf$

$E := 520pcf \cdot (D) \cdot (2.5 \cdot b_p) = 9687.6 \cdot plf$

$F := 0.8 \cdot \beta \cdot (H) \cdot (S) = 811.2 \cdot plf$

$G := 0.2 \cdot \beta \cdot (H) \cdot (S) = 202.8 \cdot plf$

Check ΣVu = 0 at D

$V_{EA} := 0.5 \cdot A \cdot H + 0.5 \cdot (C + I) \cdot D = 9831.7 \cdot lbf$

$V_{EP} := 0.5 \cdot E \cdot D = 18048 \cdot lbf$

$V_{EQ} := 0.5 \cdot (F + G) \cdot H = 3295.5 \cdot lbf$

$\Sigma Vu := 1.0 \cdot V_{EQ} + 1.5 \cdot V_{EA} - 1.0 \cdot V_{EP} = -4.95 \cdot lbf$ ΣVu almost = 0, (OK)

Check Maximum Flexural Stresses

$$M_{EA} := 0.5 \cdot A \cdot H \cdot \left(\frac{H}{3} + D\right) + C \cdot D \cdot \left(\frac{D}{2}\right) + 0.5(I - C) \cdot (D) \cdot \left(\frac{D}{3}\right) = 44427.67 \cdot lbf \cdot ft$$

$$M_{EP} := 0.5 \cdot E \cdot D \cdot \left(\frac{D}{3}\right) = 22415.61 \cdot lbf \cdot ft$$

$$M_{EQ} := G \cdot H \cdot \left(\frac{H}{2} + D\right) + 0.5(F - G)H \cdot \left(\frac{2 \cdot H}{3} + D\right) = 25131.48 \cdot lbf \cdot ft$$

$$M_u := 1.0 \cdot M_{EQ} + 1.5 \cdot M_{EA} - 1.0 \cdot M_{EP} = 69357.37 \cdot lbf \cdot ft$$

$$F_{bu} := \frac{M_u}{S_x} = 6.35 \cdot ksi$$

$$\phi F_y := 0.9 \cdot (F_y) = 45 \cdot ksi$$ Fbu < ϕFy, (OK)

Determine Required Additonal Depth of Embedment to Resist Toe Kick Out

$$\omega_u := 1.0(E) - 1.5(I) = 8092.34 \cdot plf$$

$$Y := \sqrt{\frac{6 \cdot M_u}{\omega_u}} = 7.17 \cdot ft$$

Determine Total Depth of Embedment Required Case 1

$$D_1 := D + Y = 10.9 \cdot ft$$

CASE 2 = 1.75(LS) + 1.5(EA) + 0.75(EP)

$D := 4.954ft$ Assumed Depth to Zero Shear

Unfactored Loading

$$A := \alpha \cdot H \cdot S = 2028 \cdot plf$$

$$B := (LS) \cdot S = 624 \cdot plf$$

$$C := \alpha \cdot (H) \cdot (b_p) = 676 \cdot plf$$

$$I := \alpha \cdot (H + D) \cdot (b_p) = 1191.22 \cdot plf$$

$$E := 520pcf \cdot (D) \cdot (2.5 \cdot b_p) = 12880.4 \cdot plf$$

Check ΣVu = 0 at D

$V_{EA} := 0.5 \cdot A \cdot H + 0.5 \cdot (C + I) \cdot D = 11216.09 \cdot lbf$

$V_{EP} := 0.5 \cdot E \cdot D = 31904.75 \cdot lbf$

$V_{LS} := B \cdot H = 4056 \cdot lbf$

$\Sigma Vu := 1.75 \cdot V_{LS} + 1.5 \cdot V_{EA} - 0.75 \cdot V_{EP} = -6.42 \cdot lbf$ ΣVu almost = 0, (OK)

Check Maximum Flexural Stresses

$M_{EA} := 0.5 \cdot A \cdot H \cdot \left(\frac{H}{3} + D\right) + C \cdot D \cdot \left(\frac{D}{2}\right) + 0.5(I - C) \cdot (D) \cdot \left(\frac{D}{3}\right) = 57334.96 \cdot lbf \cdot ft$

$M_{EP} := 0.5 \cdot E \cdot D \cdot \left(\frac{D}{3}\right) = 52685.38 \cdot lbf \cdot ft$

$M_{LS} := B \cdot H \cdot \left(\frac{H}{2} + D\right) = 33275.42 \cdot lbf \cdot ft$

$M_u := 1.75 \cdot M_{LS} + 1.5 \cdot M_{EA} - 0.75 \cdot M_{EP} = 104720.4 \cdot lbf \cdot ft$

$F_{bu} := \frac{M_u}{S_x} = 9.6 \cdot ksi$

$\phi F_y := 0.9 \cdot (F_y) = 45 \cdot ksi$ Fbu < ϕFy, (OK)

Determine Required Additonal Depth of Embedment to Resist Toe Kick Out

$\omega_u := 0.75E - 1.5I = 7873.48 \cdot plf$

$Y := \sqrt{\frac{6 \cdot M_u}{\omega_u}} = 8.93 \cdot ft$

Determine Total Depth of Embedment Required Case 2

$D_2 := D + Y = 13.89 \cdot ft$

GIVEN

$\alpha := 52pcf$ Active Soil Pressure Per Fig. 29 in Geotech Report

$\beta := 26pcf$ Seismic Soil Pressure Per Fig. 29 in Geotech Report

$LS := 2ft \cdot \alpha = 104 \cdot psf$ Live Load Surcharge Behind Wall

$b_p := 2ft$ Diameter of Prebored Grouted Pile Hole

$S := 6ft$ Pile Spacing

$H := 5.5ft$ Height of Wall (Bottom of Lagging to Top of FG Behind Wall)

$S_x := 131in^3$ Section Modulus of HP14x89

$F_y := 50ksi$ Yield Strength of Pile

CASE 1 = EQ + 1.5(EA) + 1.0(EP)

$D := 3.153ft$ Assumed Depth to Zero Shear

Unfactored Loading

$A := \alpha \cdot H \cdot S = 1716 \cdot plf$

$C := \alpha \cdot (H) \cdot (b_p) = 572 \cdot plf$

$I := \alpha \cdot (H + D) \cdot (b_p) = 899.91 \cdot plf$

$E := 520pcf \cdot (D) \cdot (2.5 \cdot b_p) = 8197.8 \cdot plf$

$F := 0.8 \cdot \beta \cdot (H) \cdot (S) = 686.4 \cdot plf$

$G := 0.2 \cdot \beta \cdot (H) \cdot (S) = 171.6 \cdot plf$

Check ΣVu = 0 at D

$V_{EA} := 0.5 \cdot A \cdot H + 0.5 \cdot (C + I) \cdot D = 7039.47 \cdot lbf$

$V_{EP} := 0.5 \cdot E \cdot D = 12923.83 \cdot lbf$

$V_{EQ} := 0.5 \cdot (F + G) \cdot H = 2359.5 \cdot lbf$

$\Sigma Vu := 1.0 \cdot V_{EQ} + 1.5 \cdot V_{EA} - 1.0 \cdot V_{EP} = -5.13 \cdot lbf$ ΣVu almost = 0, (OK)

Check Maximum Flexural Stresses

$$M_{EA} := 0.5 \cdot A \cdot H \cdot \left(\frac{H}{3} + D\right) + C \cdot D \cdot \left(\frac{D}{2}\right) + 0.5(I - C) \cdot (D) \cdot \left(\frac{D}{3}\right) = 26917.07 \cdot lbf \cdot ft$$

$$M_{EP} := 0.5 \cdot E \cdot D \cdot \left(\frac{D}{3}\right) = 13582.95 \cdot lbf \cdot ft$$

$$M_{EQ} := G \cdot H \cdot \left(\frac{H}{2} + D\right) + 0.5(F - G)H \cdot \left(\frac{2 \cdot H}{3} + D\right) = 15225.85 \cdot lbf \cdot ft$$

$$M_u := 1.0 \cdot M_{EQ} + 1.5 \cdot M_{EA} - 1.0 \cdot M_{EP} = 42018.51 \cdot lbf \cdot ft$$

$$F_{bu} := \frac{M_u}{S_x} = 3.85 \cdot ksi$$

$$\phi F_y := 0.9 \cdot (F_y) = 45 \cdot ksi$$ Fbu < ϕFy, (OK)

Determine Required Additonal Depth of Embedment to Resist Toe Kick Out

$$\omega_u := 1.0(E) - 1.5(I) = 6847.93 \cdot plf$$

$$Y := \sqrt{\frac{6 \cdot M_u}{\omega_u}} = 6.07 \cdot ft$$

Determine Total Depth of Embedment Required Case 1

$$D_1 := D + Y = 9.22 \cdot ft$$

CASE 2 = 1.75(LS) + 1.5(EA) + 0.75(EP)

$D := 4.328ft$ Assumed Depth to Zero Shear

Unfactored Loading

$$A := \alpha \cdot H \cdot S = 1716 \cdot plf$$

$$B := (LS) \cdot S = 624 \cdot plf$$

$$C := \alpha \cdot (H) \cdot (b_p) = 572 \cdot plf$$

$$I := \alpha \cdot (H + D) \cdot (b_p) = 1022.11 \cdot plf$$

$$E := 520pcf \cdot (D) \cdot (2.5 \cdot b_p) = 11252.8 \cdot plf$$

Check ΣVu = 0 at D

$V_{EA} := 0.5 \cdot A \cdot H + 0.5 \cdot (C + I) \cdot D = 8168.66 \cdot lbf$

$V_{EP} := 0.5 \cdot E \cdot D = 24351.06 \cdot lbf$

$V_{LS} := B \cdot H = 3432 \cdot lbf$

$\Sigma Vu := 1.75 \cdot V_{LS} + 1.5 \cdot V_{EA} - 0.75 \cdot V_{EP} = -4.31 \cdot lbf$ ΣVu almost = 0, (OK)

Check Maximum Flexural Stresses

$M_{EA} := 0.5 \cdot A \cdot H \cdot \left(\frac{H}{3} + D\right) + C \cdot D \cdot \left(\frac{D}{2}\right) + 0.5(I - C) \cdot (D) \cdot \left(\frac{D}{3}\right) = 35837.78 \cdot lbf \cdot ft$

$M_{EP} := 0.5 \cdot E \cdot D \cdot \left(\frac{D}{3}\right) = 35130.46 \cdot lbf \cdot ft$

$M_{LS} := B \cdot H \cdot \left(\frac{H}{2} + D\right) = 24291.7 \cdot lbf \cdot ft$

$M_u := 1.75 \cdot M_{LS} + 1.5 \cdot M_{EA} - 0.75 \cdot M_{EP} = 69919.3 \cdot lbf \cdot ft$

$F_{bu} := \frac{M_u}{S_x} = 6.4 \cdot ksi$

$\phi F_y := 0.9 \cdot (F_y) = 45 \cdot ksi$ Fbu < ϕFy, (OK)

Determine Required Additonal Depth of Embedment to Resist Toe Kick Out

$\omega_u := 0.75E - 1.5I = 6906.43 \cdot plf$

$Y := \sqrt{\frac{6 \cdot M_u}{\omega_u}} = 7.79 \cdot ft$

Determine Total Depth of Embedment Required Case 2

$D_2 := D + Y = 12.12 \cdot ft$

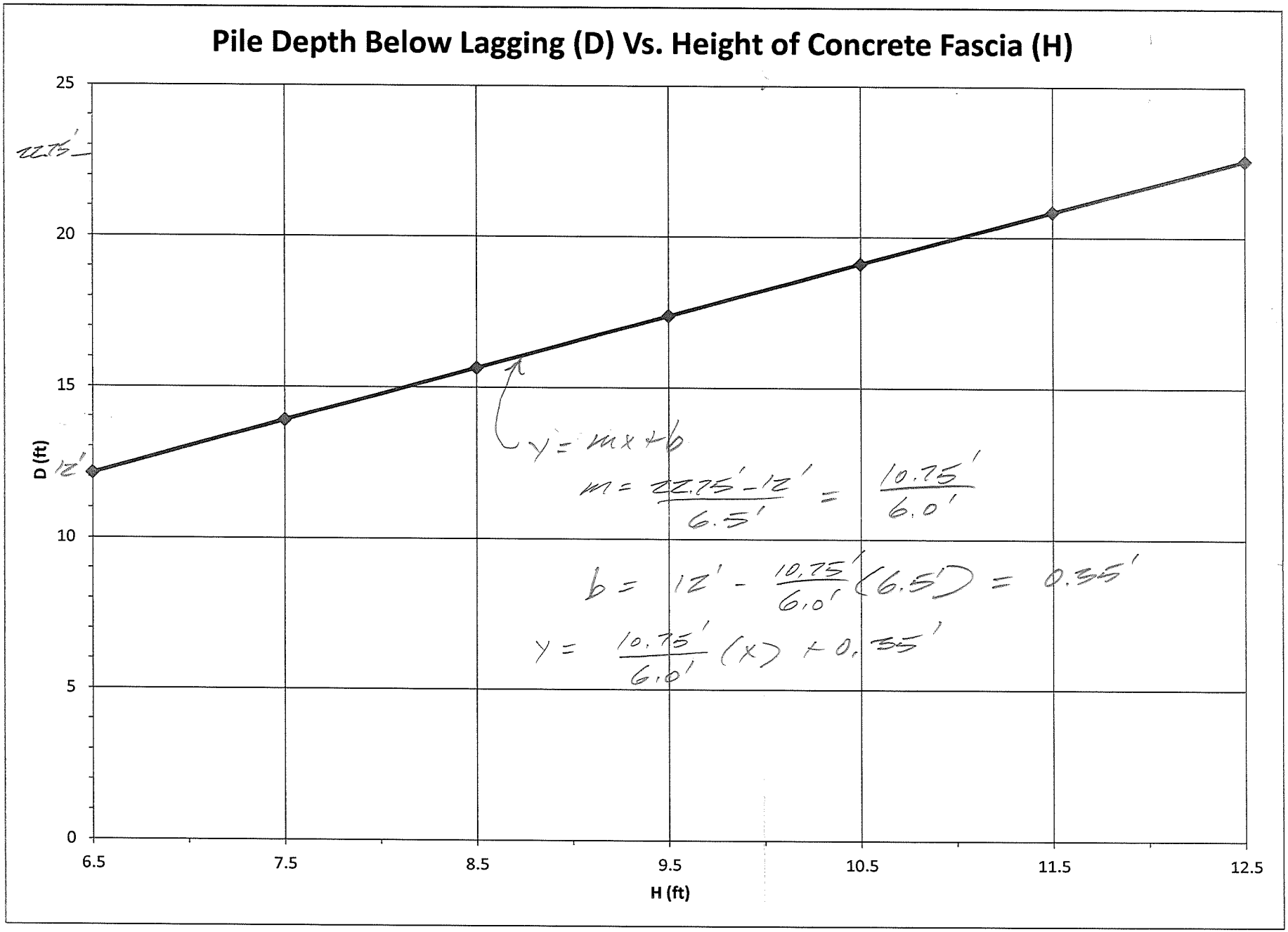
Pile Depth Below Lagging (D) Vs. Height of Concrete Fascia (H)
D (ft)
H (ft)
25
20
15
10
5
0
6.5
7.5
8.5
9.5
10.5
11.5
12.5
22.75'
12'
y = mx + b
m = (22.75' - 12') / 6.5' = 10.75' / 6.0'
b = 12' - (10.75' / 6.0')(6.5') = 0.55'
y = (10.75' / 6.0')(x) + 0.55'

24

Concrete Fascia Panel

Reference: AASHTO LRFD Bridge Design Spec. 6th Edition

FBD

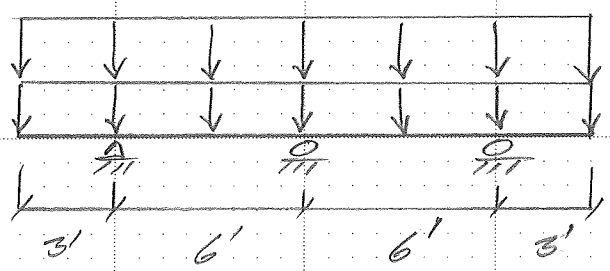

$w_u = 1.75\, w_{LL} + 1.5\, w_{EH}$ (Strength I)

$w_u = 1.75(110) + 1.5(660) = \underline{1200 \text{ plf}}$

$w = w_{LL} + w_{EH} = 110 + 660 = 770$ plf

$\frac{w}{w_u} = \frac{770}{1200} = 0.642$

Max. Load Effects From Dr. Beam Analysis on Following Pages

$M_u = 5400$ ft-lb (Strength I)

$M = 5400 \times 0.642 = 3500$ lb-ft (Service I)

$R_u = 7000$ lb (Strength I)

$V_u = 4050$ lb (Strength I)

File: Case1.dbp
Page 1/1

printed on Tuesday, May, 22, 2012 at 10:38:00
last modified on Tuesday, May, 22, 2012 at 10:38:00

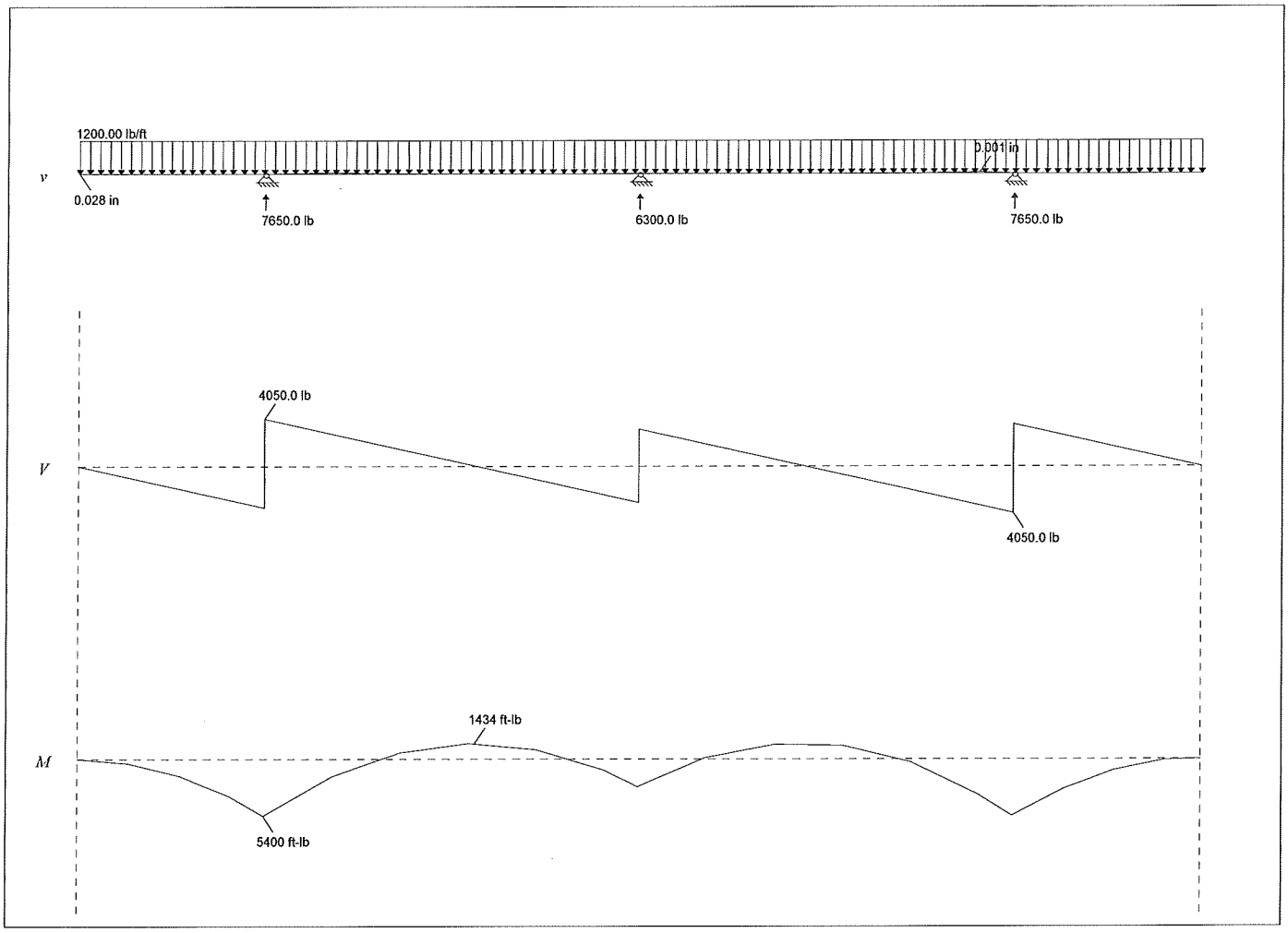

Beam Parameters: Length = 18.0 ft, E = 3640.0 ksi, I = 343.0 in^4, A = 84.0 in^2

File: Case2.dbp
Page 1/1

printed on Tuesday, May, 22, 2012 at 10:38:00
last modified on Tuesday, May, 22, 2012 at 10:35:00

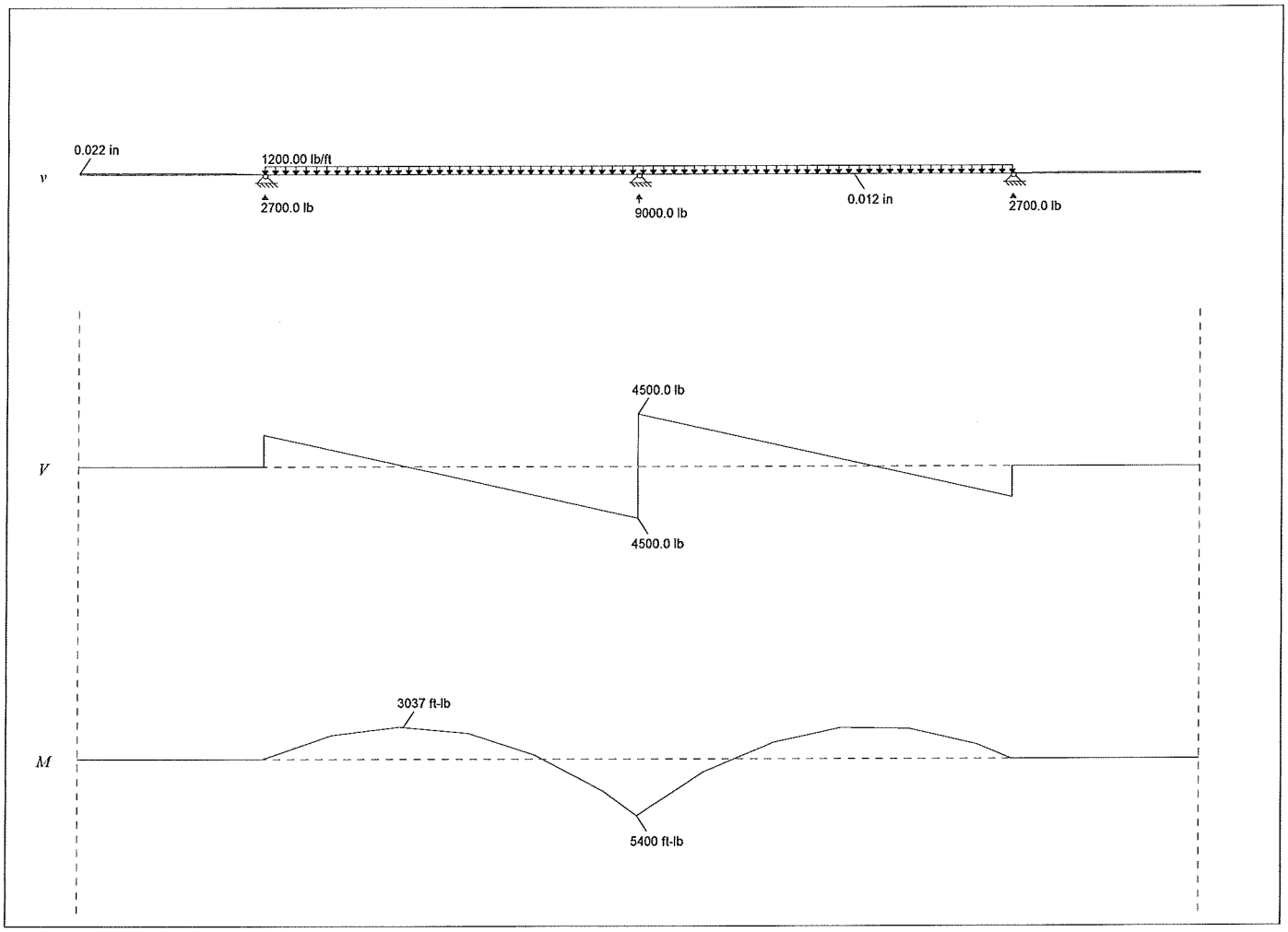

Beam Parameters: Length = 18.0 ft, E = 3640.0 ksi, I = 343.0 in^4, A = 84.0 in^2

File: Case3.dbp
Page 1/1

printed on Tuesday, May, 22, 2012 at 10:40:00
last modified on Tuesday, May, 22, 2012 at 10:36:00

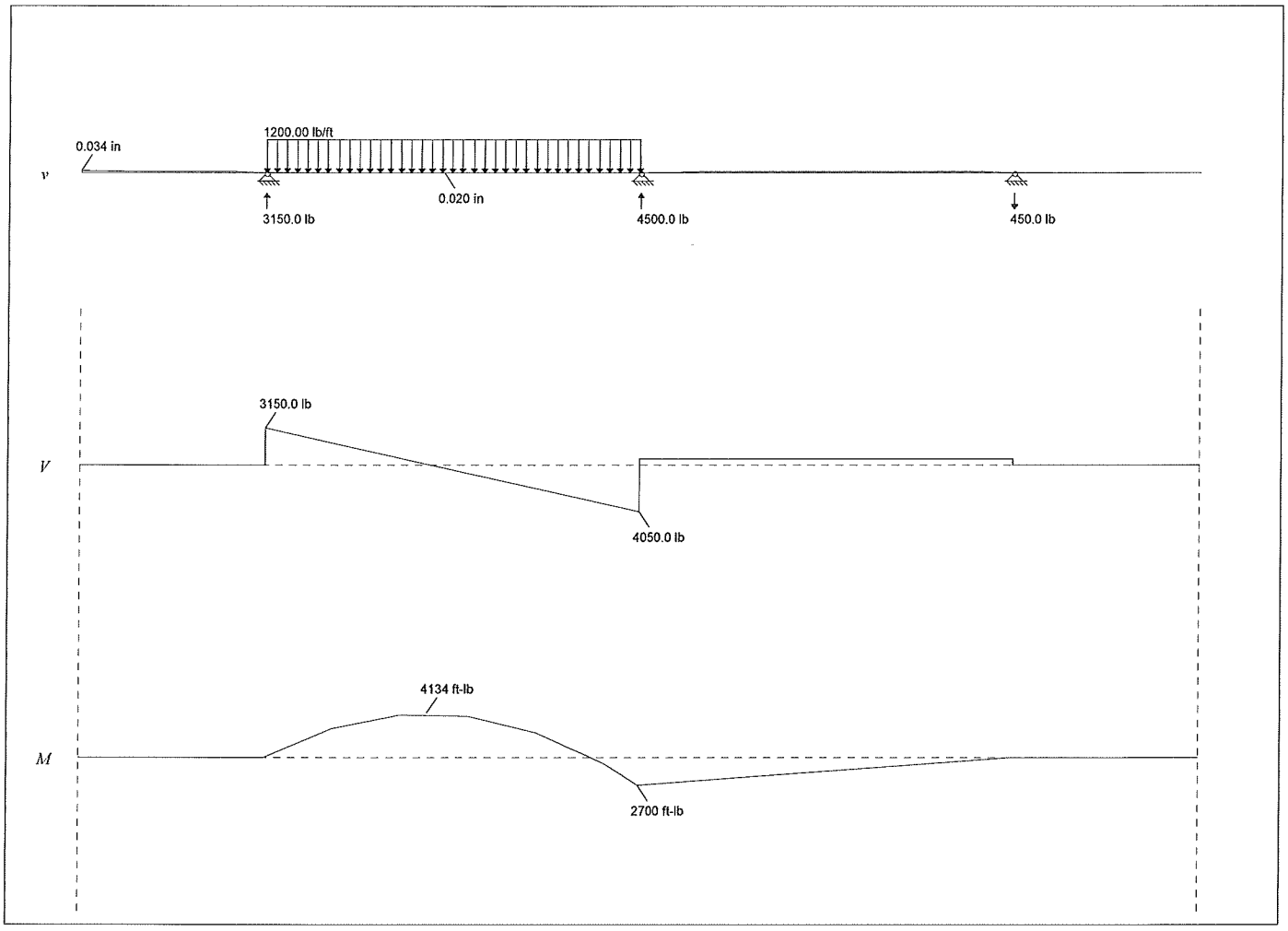

Beam Parameters: Length = 18.0 ft, E = 3640.0 ksi, I = 343.0 in^4, A = 84.0 in^2

Try 7" Thick Panel w/ $1\frac{1}{2}$" CLR to #5 @ 12" O.C.

Check Strength

$d = 7" - 1\frac{1}{2}" - \frac{5}{16}" = 5.19"$

$A_s = 0.31 \text{ in}^2$

Assume $f_s = f_y$

$T = A_s f_y = 0.31 \text{ in}^2 (60 \text{ ksi}) = 18.6 \text{ k}$

$a = \frac{T}{0.85 f'_c b} = \frac{18.6 \text{ k}}{0.85(4 \text{ ksi})(12")} = 0.456"$

$c = a/\beta_1 = 0.456"/0.85 = 0.536"$

$c/d = 0.536/5.19 = 0.103 < 0.375$ ∴ $f_s = f_y$, $\phi = 0.9$

$\phi M_n = \phi T (d - a/2)$

$\phi M_n = 0.9(18.6 \text{ k})(5.19" - 0.456"/2) = 83 \text{ k-in}$

$\phi M_n = \underline{6.92 \text{ k-ft} > 5.4 \text{ k-ft (ok)}}$

Check Service

$\rho = \frac{A_s}{bd} = \frac{0.31 \text{ in}^2}{12"(5.19")} = 0.005$

$n = \frac{E_s}{E_c} = \frac{29000}{1820\sqrt{4}} = 8$

$k = \sqrt{2n\rho + (n\rho)^2} - n\rho$

$k = \sqrt{2(0.04) + (0.04)^2} - (0.04) = 0.246$

$j = 1 - \frac{k}{3} = 1 - \frac{0.246}{3} = 0.918$

$$f_{ss} = \frac{M}{A_s j d} = \frac{(3500\ \text{lb-ft})(12''/1')}{0.31\ \text{in}^2(0.98)(5.19'')} = 28{,}436\ \text{psi}$$

$$f_{ss} = 28.4\ \text{ksi}$$

$$\beta_s = 1 + \frac{d_c}{0.7(h - d_c)}$$

$$d_c = c_1 + d_b/2 = 1.5'' + \frac{5}{16}'' = 1.81''$$

$$h = 7''$$

$$\beta_s = 1 + \frac{1.81}{0.7(7'' - 1.81'')} = 1.50$$

$$s \le \frac{700\,\gamma_e}{\beta_s f_{ss}} - 2d_c$$

$$s \le \frac{700(0.75)}{1.5(28.4)} - 2(1.81)$$

$$s \le 8.7''\ \text{(NG)}$$

So Use #4's @ 8" O.C. $\left\{ \begin{array}{l} A_s = 0.2\left(\frac{12}{8}\right) \\ A_s = 0.30\ \text{in}^2 \end{array} \right.$

Check Minimum Reinforcement

$$\phi M_n \ge \text{lesser of } 1.33 M_u \text{ or } M_{cr}$$

$$1.33 M_u = 1.33(5.4\ \text{k-ft}) = 7.2\ \text{k-ft}$$

$$M_{cr} = \gamma_3(\gamma_1 f_r S_c)$$

$$\gamma_3 = 0.67$$

$$\gamma_1 = 1.6$$

$f_r = 0.24\sqrt{4} = 0.48\ ksi$

$S_c = \frac{bh^2}{6} = \frac{12''(7'')^2}{6} = 98\ in^3$

$M_{cr} = 0.67(1.6)(0.48\ ksi)(98\ in^3)$

$M_{cr} = 50.4\ k\text{-}in = 4.2\ k\text{-}ft$

$M_{cr} < 1.33\ M_u$

$\phi M_n \geq M_{cr}$

$\phi M_n = 6.92\ k\text{-}ft$

$M_{cr} = 4.2\ k\text{-}ft$

So Min. Reinforcement Check OK

<u>Use #4's @ 8" O.C. Each Face</u>

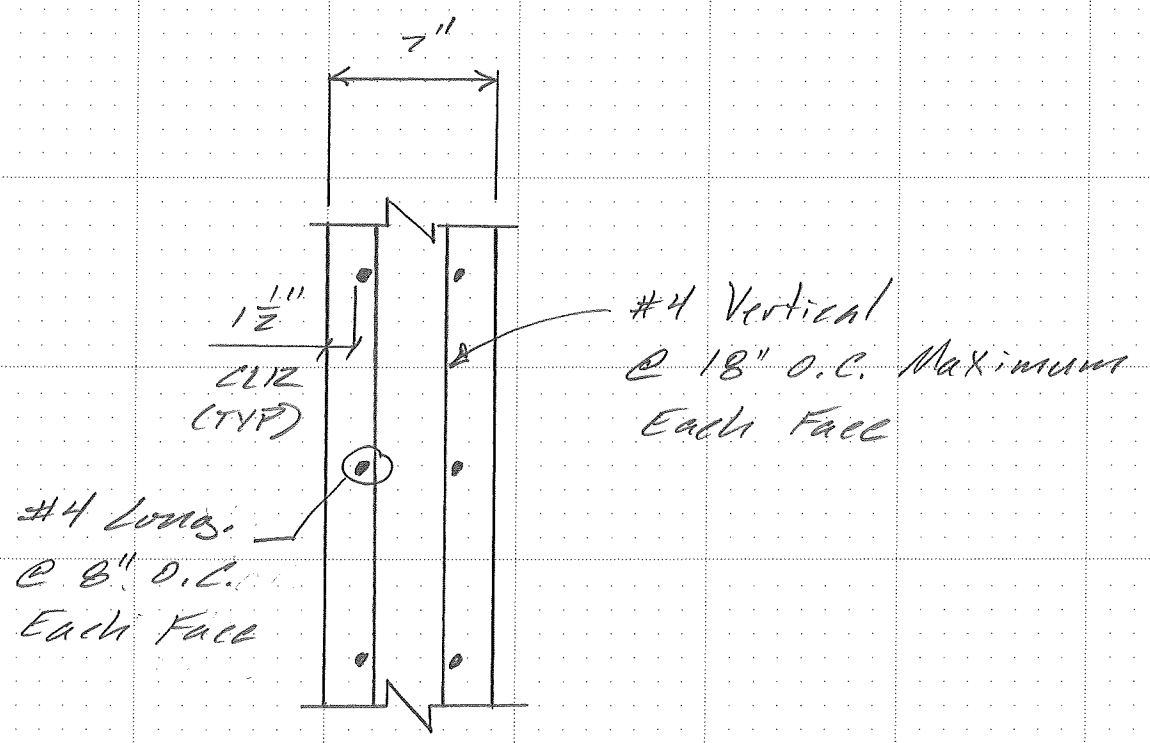

Parametrix

PROJECT ELST - N. Segment			SHEET ___ OF ___
BY S. Brown	DATE	CHECKED	DATE
SUBJECT Soldier Pile Wall	JOB NO. 554-1521-075	PHASE	TASK

Check Shear Stud Breakout Strength

$N_u = R_u = 9000\ lb$

$\phi N_{cb} = \phi\, C_{bs}\, A_N\, C_{crb}\, \psi_{ed,N}$ (PCI Handbook, 6th Edition, 6.5.4.1)

$\phi = 0.70$

$A_N = 3 h_{ef} \times s$

$h_{ef} = 6'' - 1/2'' = 5.5''$

$s = 12''$

$A_N = 3(5.5'')(12'') = 198\ in^2$

$C_{bs} = 3.33\, \lambda \sqrt{\frac{f'_c}{h_{ef}}}$

$\lambda = 1.0$

$f'_c = 4000\ psi$

$C_{bs} = 3.33(1.0)\sqrt{\frac{4000}{5.5}} = 89.8\ psi$

$C_{crb} = 0.8$

$\psi_{ed,N} = 0.7 + 0.3\left(\frac{d_{min}}{1.5 h_{ef}}\right) = 0.7 + 0.3\left(\frac{6}{1.5 \times 5.5}\right)$

$\psi_{ed,N} = 0.9$

$\phi N_{cb} = 0.7(89.8\ psi)(198\ in^2)(0.8)(0.9) = \underline{8900\ lb}$

$8900\ lb < 9000\ lb$ (NG) However Check Actual Loading

1-10 GRID PATTERN 06.05.12

Parametrix

PROJECT ELST - N. Segment			SHEET ___ OF ___
BY S. Emmons	DATE	CHECKED	DATE
SUBJECT Soldier Pile Wall	JOB NO. 554-1521-075	PHASE	TASK

$$N_u = R_u \left(\frac{w_{u_actual}}{w_{u_previous}} \right)$$

$$w_{u_actual} = 1.75(2' \times 52pcf) + 1.5(52pcf)(12')$$

$$w_{u_actual} = 1118 plf$$

$$w_{u_previous} = 1200 plf$$

$$N_u = 9000 lb \left(\frac{1118}{1200} \right) = \underline{8400 lb}$$

$$\therefore \underline{N_u < \phi N_{cb}}$$

$$\underline{8400 < 8900 \text{ (ok)}}$$

Parametrix

PROJECT EL5T - N. segment SHEET 1 OF 1

BY S. Brown DATE 7-27-12 CHECKED DATE

SUBJECT Concrete Fascia Panel Sketch JOB NO. 554-1521-075 PHASE TASK

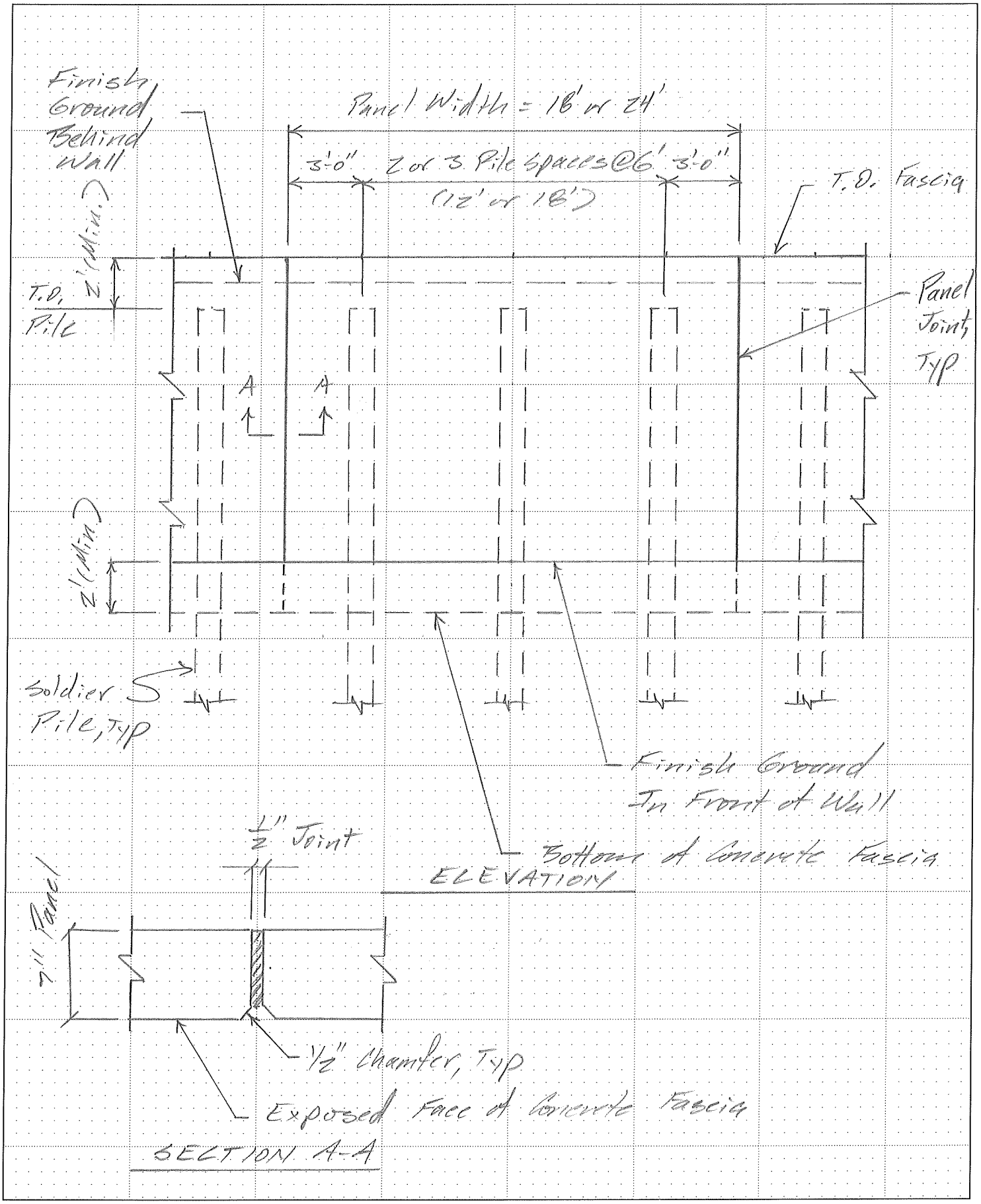

Parametrix

PROJECT ELST - N. Segment SHEET ____ OF ____
BY S. Brown DATE ____ CHECKED ____ DATE ____
SUBJECT Soldier Pile Wall JOB NO. 554-1521-015 PHASE ____ TASK ____

Temporary Lagging Design

$H_{max} = 12'$

$\sigma_{EH} = H_{max}\gamma_{EQ} = 12'(55pcf) = 660psf$

$\sigma_{LS} = h_{eq}\gamma_{EQ} = 2'(55pcf) = 110psf$

$M = \frac{wl^2}{8}$

$w = 1ft(660psf + 110psf) = 770plf$

$l = 6' - 1' = 5'$

$M = 770plf(5')^2/8 = 2406\ lb\text{-}ft = 29{,}000\ lb\text{-}in$

$F_b = 875psi$ (NDS, Table 4D, D. Fir No. 2)

$S_{req'd} = \frac{M}{F_b} = \frac{29{,}000\ lb\text{-}in}{875psi} = 33.1\ in^3/ft$

$S = \frac{bt^2}{6} \geq 33.1\ in^3$

$\frac{12''t^2}{6} \geq 33.1\ in^3$

$t \geq 4.1''$

So Use Nominal 6" Thick Timber Lagging

Check Shear (NDS, Table 4D)

$F_v = 170psi$ $V = wl/2 = 770plf(5')/2 = 2000lb$

$f_v = \frac{3V}{2bd} = \frac{3(2000lb)}{2(5.5")(12")} = 45psi < 170psi$ (ok)