Moshier Park LID Retrofit Project

Final Preliminary Pre-Engineering Design Report

Revised February 2015

Basin Study:	Miller-Walker Basin Stormwater Retrofit Planning Study
Site Name:	Moshier Park and Community Arts Center
Site Location:	430 156th Avenue SW, Burien WA
Site Number:	B-29 and B-31 (for reference in plan report)
Basin Partners:	King County Water and Land Resources Division, Cities of Burien, Normandy Park, and SeaTac, the Port of Seattle, and Washington State Department of Ecology

Purpose

The Washington State Department of Ecology's (Ecology) Water Quality Program administers four main funding programs under an integrated annual funding cycle. Ecology awards grants and loans on a competitive basis to eligible public bodies for high priority water quality projects throughout Washington State.

Ecology evaluates project proposals based on responses provided on eight forms of the application. A total of 1,000 points are available. In order to obtain funding a project must receive a score of at least 600 total points, and it must receive at least 125 of the 250 possible points on the Water Quality and Public Health Improvements Form.

The grant application consists of eight forms: 1) Scope of Work; 2) Tasks Costs General; 3) Water Quality and Public Health Improvements; 4) Coordination with State and Federal Priorities; 5) Project Team; 6) Project Development, Local Support, and Past Performance; 7) Readiness to Proceed; and 8) Financial Hardship. This preliminary pre-engineering design report provides technical information to assist the applicant with completing five of the eight forms, including Tasks Costs General; Water Quality and Public Health Improvements; Coordination with State and Federal Priorities; Project Team; and Project Development, Local Support, and Past Performance. For each of these forms, the objective of the form is briefly described and technical information to be included in the form by the applicant is provided below.

Task Cost General Form

Objective of the Form: Provide a cost estimate that is reasonable for the level of design that represents a good value for the work and water quality benefits achieved.

Information for Input into the Form: A planning-level design and construction cost estimate was developed for the proposed improvements based on bid tabulations and HDR's experience on recently constructed projects in the area. Table 1 provides a high-level summary of the preliminary planning-level construction, engineering, contingencies, and administrative costs

estimated for the project. A detailed breakdown of the preliminary planning-level construction costs has been included in Attachment A.

Table 1. Planning-Level Project Cost Summary

Cost Type	Cost
Preliminary Planning-Level Construction Cost [a]	$3,614,896
Construction Engineering [b]	$596,000
Engineering Services During Construction [c]	$141,000
Contingencies	$1,807,448
City Administrative Costs	$20,000
Total Preliminary Planning-Level Project Cost [d]	$6,179,344

Notes:

a) Preliminary Planning-Level Construction Cost includes a costs for a pre-treatment system that are based on one (1) Vortech- 1000 series and one (1) Vortech-2000 series, to provide pre-treatment prior to infiltrating road and turf runoff in the infiltration galleries. Installed costs provided by Stephanie Jacobsen, Contech Engineering Solutions via e-mail to Robin Kirschbaum, HDR on 10-23-14.

b) Construction Engineering includes project management and preparation of final plans, specifications, and estimates.

c) Engineering Services During Construction includes time and expenses for the Project Manager, Lead Civil, Lead Landscape Architect, and Hydrogeologist to attend construction meetings, prepare responses to contractor and design changes if needed, and observe excavation and placement of materials as directed in the plans.

d) Total Preliminary Planning-Level Project Cost does not include costs for the conversion of the ball fields to artificial turf. Those costs will be covered outside of this project (Burien 2000).

The total capital cost of the facility, would be $4,210,896, which includes the total planning-level construction cost, construction engineering, and engineering services during construction from Table 1. The routine maintenance activities assumed an annual cost of $17,725, which includes activities such as facility inspection, litter and minor debris removal, and permeable pavement vacuum sweeping. The corrective and infrequent maintenance activities assumed an annual cost $18,501, which included activities such as intermittent facility maintenance and removal and replacement of approximately 10% of the pavement surface over time. Based on these assumptions, the annual NPV cost over a 20-year period is estimated to be $4,424,266.38. Evenly distributing that cost out over the assumed 40-year design life of the project would equate to an annual cost of $110,606.66.

The cost-benefit values in Table 2 were calculated by dividing the NPV annual project cost by the expected amount of total suspended solids (TSS) removed, volume of stormwater treated, and area treated by the project. Discussion of the methods, assumptions, and results for calculating the pollutant removal rates is provided below in the Section titled “Water Quality and Public Health Improvements Form”.

Table 2. Cost-Benefits for Pollutant Load Reduction

Cost-Benefit Values	Units	Cost per Unit Pollutant Removal
Cost of Total Suspended Solids Removed	$/Pound/year	$82.37
Cost per acre treated	$/Acre/year	$8,205.36
Cost of Stormwater Volume Treated	$/Gallon/year	$0.02

Water Quality and Public Health Improvements Form

Objective of the Form: Describe the water quality problem and how the project will achieve substantial water quality and public health benefits. Explain how the project success will be measured and the systems that will be in place to sustain the benefits after support has ended.

Information for Input into the Form:

Water Quality Problem Description

Miller Creek is a natural Coho Salmon bearing creek that crosses through a highly urbanized area and ultimately discharges to the Puget Sound. Due to the amount of untreated stormwater runoff draining from the Creek basin, the health of the creek has become greatly degraded. The degradation of the water quality has been linked to the elevated levels of pollutants (zinc, copper, fecal coliform) and high peak flow rates. Past studies in 2000 and 2004 found that the Benthic Index of Biotic Integrity (BIBI) score of the creek ranged from 12 to 14, which correspond to poor conditions for supporting aquatic habitat (King County 2006). In addition, the increased peak flow rates are the result of the existing vegetation being converted to impervious or less pervious surfaces has caused local flooding and erosion along the banks of the creek. The degraded water quality has been linked to the high pre-spawn mortality rate of the Coho salmon that has ranged from 50% to 90% in recent years (King County 2014).

The Moshier Park and Community Art Center (Moshier Park) site is located approximately 800 feet west of Miller Creek at 430 South 156th Avenue in Burien Washington, as shown in the vicinity map in Figure 1.

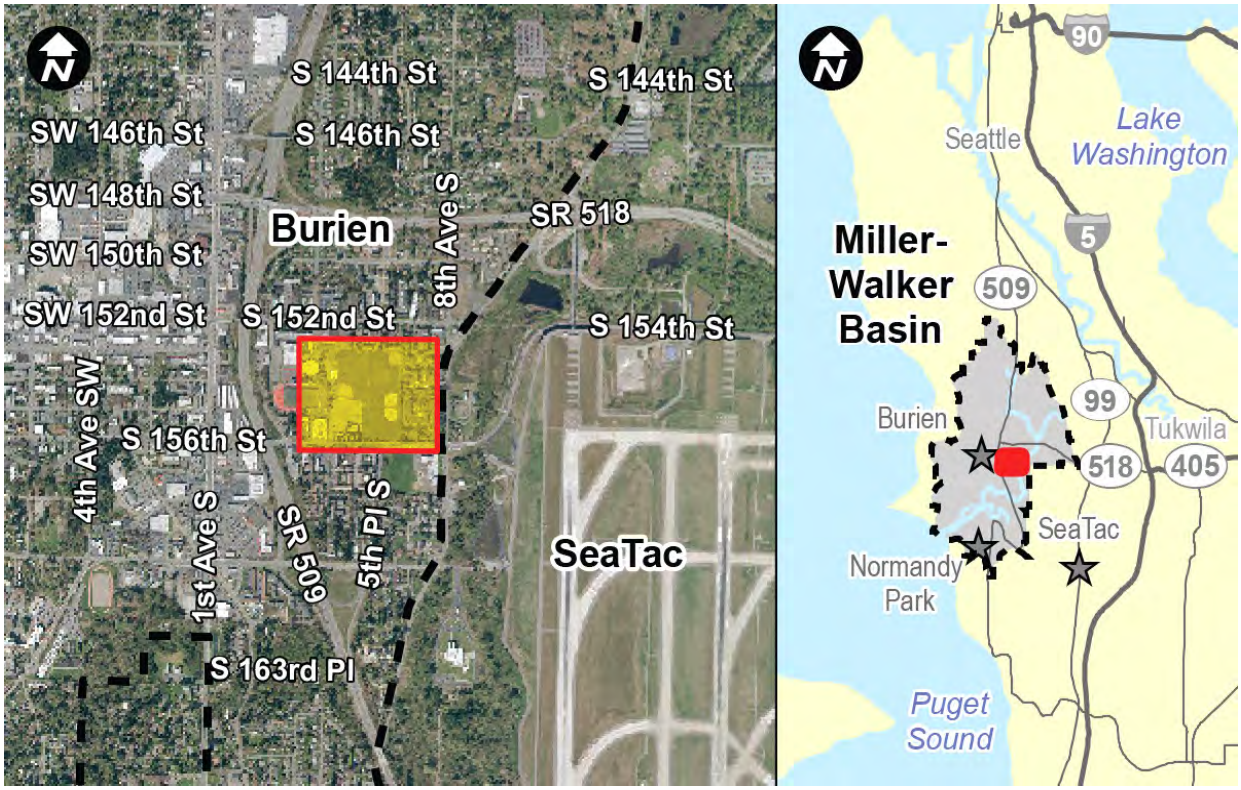

Figure 1. Vicinity Map

The project proposes to manage stormwater runoff from a total 13.786 acres, including approximately 11.700 acres of on-site area (parking lot, Community Arts Center building site, and two ball fields) and approximately 2.086 acres of offsite contributing driveway and roadway area to the west and south of the park. The existing land use cover includes approximately 3.002 acres of parking lot, 0.230 acres of sidewalk, 0.184 acres of roof, 0.172 acres of landscape, and 8.112 acres of grass field. The stormwater runoff from the Moshier Park site discharges directly to Miller Creek untreated and without flow control.

Proposed Improvements

This project will implement a number of LID Best Management Practices (BMPs) to improve water quality and reduce the volume and peak stormwater runoff discharge rates leaving the site. The suite of BMPs proposed includes permeable pavement, bioretention, Silva Cells, and infiltration galleries, as follows:

- Replace approximately 2.512 acres of existing parking lot and sidewalks with permeable pavement, including porous asphalt drive aisles, permeable paver parking spaces, and pervious concrete sidewalks.
- Provide approximately 15,300 square feet (0.352 acres) of bioretention top area in between and at the end of the parking aisles.

- Install under-pavement soil cell systems (i.e., Silva Cells or equivalent) below the proposed permeable sidewalks to further promote infiltration and provide for large, healthy tree growth along the length of the western driveway.
- Provide approximately 600 square feet (0.014 acres) of bioretention near the access ramp to the fields in the northeast corner of the parking lot.
- Construct approximately 30,000 square feet (0.689 acres) infiltration galleries beneath the northwest and the south ball fields, which the Parks Department plans to convert from natural grass to artificial turf fields as part of a separate park improvement project (Burien 2000). The galleries have been sized to accommodate stormwater runoff from the 9.99 acre drainage area that includes the two fields (approximately 8.112 acres), impervious driveway/turnaround area (approximately 1.311 acres) west of the northwest field, and roadway runoff from South 156th Street (approximately 0.568 acres) south of the southern field. The stormwater runoff from the pollution-generating impervious and pervious surfaces will be pre-treated using a hydrodynamic separator before entering the infiltration galleries.
- Retrofit the Community Arts Center with on-site bioretention, pervious concrete sidewalks, and a cistern. The cistern will collect stormwater runoff from approximately one quarter of the roof area (approximately 2,000 square feet (0.046 acres)), which will be routed to a cistern to store and supply water for irrigation and outdoor cleaning. The remaining roof area will drain to bioretention or existing lawn and landscaped areas adjacent to the building. The proposed improvements will effectively remove a total of approximately 6000 square feet (0.138 acres) of existing impervious area from the drainage area.

Figure 2 provides a schematic layout of the proposed LID retrofits for the parking lot, community art center, and ball fields. Attachment B provides preliminary pre-engineering plans developed to support preliminary cost estimating and final engineering design.

This page intentionally left blank.

King County HDR

MILLER-WALKER BASIN
STORMWATER RETROFIT PROJECT

PROJECT STUDY AREA: **BURIEN SITE #29 AND #31**
MOSHIER PARK

Proposed Condition

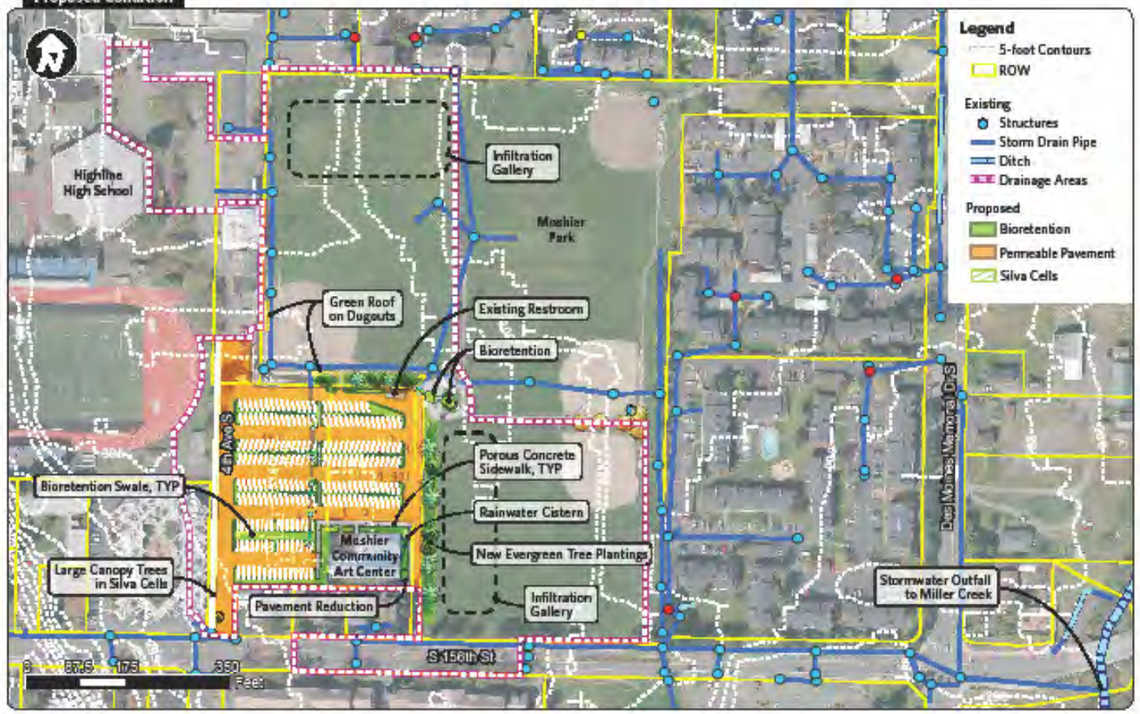

Project Summary

LID Typology: Bioretention, Permeable Pavement, Silva Cells, and Rainwater Cistern
Receiving Water: Miller Creek
Site Priority Rank: #1 and #2

Planning-Level Construction Cost Range
Low end: $2,531,000
High end: $5,423,000

Description

This project would install bioretention between and at the end of the parking aisles, permeable pavement drive lanes and parking stalls, permeable pavement sidewalks with Silva Cells, infiltration galleries, and a rainwater cistern to provide enhanced water quality treatment and flow control for the site. Runoff currently discharges untreated to Miller Creek.

Opportunities

- Provide enhanced water quality and flow control for the site
- Highly visible project with very good educational benefits
- Leverage the City of Burien's plans to refurbish the parking lot

Constraints

- The Highline School District and the City of Burien each own portions of the parking lot, requiring additional coordination
- Heavily used site during the school year and events

Drainage Area (SF)

Roof: 8,000
Sidewalk: 22,000
Parking: 180,120
Roadway: 19,760
Pervious: 357,300
Total: 587,180 SF

Pollutant Load Reduction

Copper (Lbs/yr): 0.12
Fecal Coliform (MPN in millions/yr): 0
Nitrogen (Lbs/yr): -5.53
Phosphorus (Lbs/yr): 2.80
Suspended Solids (Lbs/yr): 1,342.81
Zinc (Lbs/yr): 1.29

Hydrology

Average Annual Volume Infiltrated (ac-feet/yr): 19.5
Subbasin M-10:
- 2-yr Peak Flow Reduction: 27%
- High Pulse Count Reduction (Avg # High Pulses/yr): 12%
- High Pulse Count Reduction (Avg High Pulse Count Range/yr): 5.3%
- B-IBI Increase: 17.3 to 19.2 (11%)

Project Location

Existing Condition

Typical BMP Concept - Permeable Parking

Typical BMP Concept - Underground Infiltration Gallery

Figure 2. Proposed Project Improvements

This page intentionally left blank.

Water Quality and Public Health Benefits

The project site currently discharges untreated, uncontrolled stormwater runoff from approximately 4.6 acres of pollution-generating impervious surfaces. With the planned conversion of the ball fields from natural grass to turf, another 8.1 acres of pollution-generating pervious surfaces would contribute additional flows and pollutant loadings to the creek. Table 3 shows event mean concentrations (EMCs) of the pollutants typically found in untreated stormwater runoff from developed sites in residential areas. Given these high pollutant concentrations and the relatively large, uncontrolled and untreated areas within the project site, the park and surrounding tributary areas contribute significantly to the low BIBI scores and high salmon pre-spawn mortality rates in Miller Creek discussed above.

Table 3. Event Mean Concentrations (EMC) of Pollutants in Stormwater Runoff [a]

Pollutant	Units	Typical Pollutant EMC for Residential Sites
Suspended Solids, Total	mg/L	48
Fecal Coliform	MPN/100 mL	7,750
Copper, Total	ug/L	12
Zinc, Total	ug/L	73
Phosphorus, Total	mg/L	0.3
Nitrogen, Total	mg/L	1.4

Notes:

ug Micrograms
MPN Most Probable Number
mg Milligrams
a) Source: Draft Western Washington Phase II Municipal Permit Fact Sheet, November 4, 2011 (WERF et. al 2012).

The selected stormwater BMPs for the proposed LID retrofit will promote infiltration and provide enhanced water quality treatment to substantially reduce the pollutant loading of the stormwater discharging from the site. The BMPs provide several treatment mechanisms, including sedimentation, filtration, soil adsorption, biological uptake by plants, microbial transformation of nutrients, and stormwater runoff volume reduction. Table 4 summarizes pollutant removal efficiencies for each BMP, based on monitoring data provided in the *International Stormwater BMP Database* (Geosyntec and Wright Water Engineers 2012) and published values used in King County's *Stormwater Retrofit Analysis and Recommendations for Juanita Creek Basin in the Lake Washington Watershed Creek* (2012).

Table 4. Summary of Pollutant Removal Efficiencies by BMP [a]

		Bioretention			Permeable Pavement		
Pollutant	**Units**	**In (mg/L)**	**Out (mg/L)**	**Removal (%)**	**In (mg/L)**	**Out (mg/L)**	**Removal (%)**
Total Suspended Solids	mg/L	37.5	8.3	78%	65.3	13.2	80%
Fecal Coliforms [b]	MPN/100 mL	NA	NA	0%	N/A	N/A	0%
Total Copper	ug/L	17	7.67	55%	13.07	7.83	40%
Total Zinc	ug/L	73.8	18.3	75%	57.6	15	74%
Total Phosphorus	mg/L	0.11	0.09	18%	0.15	0.09	40%
Total Nitrogen	mg/L	1.25	0.9	28%	1.26	1.49	-18%

Notes:

mg/L Milligrams per liter
µg/L Micrograms per liter
MPN Most Probable Number
N/A Not Available

a) Concentrations and removal efficiencies for Total Suspended Solids, Total Copper, Total Zinc, Total Phosphorus, and Total Nitrogen based on median (95% confidence interval) values reported in the 2012 International Stormwater Best Management Practice Database (Geosyntec and Wright Water Engineers 2012).

b) Concentrations and removal efficiencies for Fecal Coliforms were not available in either the 2012 International Stormwater Best Management Practice Database (Geosyntec and Wright Water Engineers 2012) or the Stormwater Retrofit Analysis and Recommendations for Juanita Creek Basin (King County 2012). Therefore removal of Fecal Coliforms was assumed to be 0% for this analysis.

To calculate the project's expected pollutant load reductions, the existing condition (i.e., untreated) concentrations from Table 3 were converted to average annual pollutant loadings for the six pollutants of concern by multiplying the concentration values by the average annual runoff volumes (existing conditions) modeled in Western Washington Hydrology Model version 2012 (WWHM2012). The modeled average annual reduction in stormwater volume (from WWHM2012) and the BMP removal efficiencies from Table 4 were then applied to the existing condition pollutant loadings to estimate the average annual pollutant load reduction for the proposed retrofit condition.

Table 5 summarizes the resulting estimates of average annual pollutant load reduction for the 13.8-acre project site. The average annual pollutant loading for the existing conditions was estimated by multiplying the modeled average annual runoff volume (developed using the 2012 Western Washington Hydrology Model) by the typical pollutant EMC values provided in Table 3. The average annual pollutant loading for the proposed conditions was then estimated by multiplying existing pollutant load by the amount treated by the BMP (91% of the flow), the expected pollutant load removal percentage (provided in Table 4), and the percentage of BMP footprint area that will be provided.

Table 5. Estimated Average Annual Pollutant Loading

Pollutant	Units	Average Annual Pollutant Loading for Existing Conditions	Average Annual Pollutant Load Reduction for Proposed Conditions	Pollutant Load Reduction
Suspended Solids, Total	Pounds/year	1,935	1,544	79.8%
Fecal Coliform	MPN in millions/year	1,417,218	0	0
Copper, Total	Pounds/year	0.5	0.1	26.3%
Zinc, Total	Pounds/year	2.9	1.4	47.7%
Phosphorus, Total	Pounds/year	12.1	3.0	25.1%
Nitrogen, Total	Pounds/year	56.4	-5.8	-10.3%
Total Volume of Stormwater Treated	Gallons/year	5.460	4.97	91%

Notes:

MPN Most Probable Number

N/A Not Applicable

a) Average Annual Pollutant Loading for Existing Conditions calculated by multiplying the modeled average annual runoff volume developed using the WWHM2012 by the typical pollutant EMC values provided in Table 3.

b) Average Annual Pollutant Load Reduction for Proposed Conditions calculated by multiplying the Average Annual Pollutant Loading for Existing Conditions by the BMP pollutant removal efficiency provided in Table 4.

c) Pollutant Load Reduction calculated by dividing the Average Annual Pollutant Loading for Existing Conditions by the Average Annual Pollutant Loading Reduction for Proposed Conditions.

d) Average Annual Pollutant Load Reduction for Proposed Conditions for both Copper and Phosphorus are based on the removal rates provide by the International Stormwater Database, which are not consistent with local testing data based on Ecology's current specification for bioretention soil mix (BSM). Ecology's research shows that BSM meeting their current specifications exports both copper and phosphorus. Therefore, Ecology is in the process of updating the BSM specification. The pollutant load reductions should be recalculated when the performance data for the new BSM becomes available.

e) Total Volume of Stormwater Treated calculated by multiplying the area tributary to a BMP by the average annual runoff volume for a representative one acre area.

Appendix N of Ecology's Funding Guidelines, State Fiscal Year 2016, Water Quality Financial Assistance document outlines procedures for calculating Runoff Treatment Ratios and Flow Control Ratios to provide quantitative comparison of the amount of runoff treatment and flow control provided by the proposed retrofits versus the amount that would be required were the project subject to new or redevelopment standards. Table 5 provides a summary of the calculated ratios.

Table 6. Runoff Treatment and Flow Control Ratios

BMP	Type of Ratio [a]	Required Facility Bottom Area [b] (SF)	Provided Facility Bottom Area [c] (SF)	Ratio [d]	Area Tributary to BMP (Acres)	Effective New/ Replaced Area (Acres)[e]
Bioretention	WT-2	84	1,100	100% [f]	0.16	0.16
Permeable Pavement	FC-2	6400	99,585	100% [f]	3.33	3.33
Infiltration Gallery	FC-2	30,000	30,000	100% [f]	9.99	9.99

Notes:

a) Type of Ratio refers to the Ecology's method for quantifying the stormwater benefits for retrofit projects in Western Washington, which is defined in Appendix N of the Funding Guidelines for State Fiscal Year 2016 (Ecology 2014a). WT-2 refers to the method of calculating the Runoff Treatment Ratio for bioretention facilities. FC-2 refers to the method of calculating the Flow Control Ratio for Bioretention/Permeable Pavement.
b) Required Facility Bottom Area was estimated using WWHM2012 software to model the conceptual design based on the criteria provided in the 2012 Ecology Stormwater Management Manual for Western Washington for new and redevelopment projects. The required facility bottom area for bioretention is low because of the amount of permeable pavement provided. The bioretention provides a factor of safety for the permeable pavement, demonstrates this important LID BMP in a prominent location, and provides landscape amenity for a highly-used park.
c) Provided Facility Bottom Area based on the conceptual preliminary pre-engineering layout provided in Attachment B.
d) Ratio was calculated by multiplying the Provided Facility Bottom Area by the Required Facility Bottom Area.
e) Effective New/Replaced Area calculated by multiplying the Procedure Ratio by the area tributary to the BMP.
f) Ratio (FC-2 and WT-2) is limited to 100% because the facility can only treat the amount of stormwater runoff tributary to the facility even if the proposed facility provides more bottom area than required.

In addition to the quantifiable estimates of pollutant load reduction benefits, the proposed improvements will greatly improve a highly-used park, providing educational opportunities and neighborhood enhancement that will benefit many park users from Highline High School and the surrounding community.

Measuring Success

The Miller-Walker Creek Basin Partners (King County, City of Burien, City of Normandy Park, City of Seatac, and Washington State Department of Transpiration (WSDOT)) currently monitor water quality, flow rates, and biological health of the Creek on-going basis, as required by the Washington State Water Quality Standards (WAC 173-201A) (King County 2013). The monitoring program measuring the dissolved oxygen (DO), pH, temperature, and turbidity in the creek; calculates the average BIBI score; and monitors the pre-spawn mortality rate of the Coho salmon. By removing pollutants and reducing peak flow rates discharging to the creek the project will contribute to the basin wide efforts to improve the water quality and flow conditions in the creek.

Long-Term Maintenance

The proposed improvements are located on both City of Burien and Highline School district property. The City of Burien Public Works Department will be responsible for long-term

operation and maintenance of the proposed improvements, other than the turf surfacing of the ball fields, which will be Parks' responsibility.

Operation and maintenance guidelines for bioretention, permeable pavement, and infiltration galleries, based on the Western Washington Low Impacted Development (LID) Operations and Maintenance guidance document (Ecology 2013), are provided in Attachment C.

Coordination with State and Federal Priorities Form

Objective of the Form: Discuss the degree to which the project address a current permit requirement or TMDL implementation, other state or federal water quality requirements, the Puget Sound Partnership Action Agenda, and/or greenhouse emission reductions in accordance with RCW 70.235.070**.**

Information for Input into the Form:

This project was identified as the top priority project in the Miller-Walker Basin Retrofit Planning Study, conducted by HDR under contract with King County Water and Land Resources Division. The primary goal of the study was to identify feasible retrofit projects and prioritize the best projects that will most cost-effectively improve water quality and protect and restore habitat in the creeks.

This goal directly aligns with the Puget Sound Partnership's 2014/2015 Action Agenda, which prioritizes preventing pollution from urban stormwater runoff and protecting and restoring salmon habitat in creeks that flow to Puget Sound.

The improvements will be designed in accordance with the stormwater manual adopted by the City at the time of design, which is expected to be the *2012 Stormwater Management Manual for Western Washington* as amended in December 2014 (Ecology 2014b) or an Ecology-approved equivalent manual. The improvements will also be designed with guidance from the *Low Impact Development Technical Guidance Manual for Puget Sound* (WSUPREC 2012) where applicable.

There are no TMDLs for Miller or Walker Creek.

Project Development, Local Support, and Past Performance Form

Objective of the Form: Describe the decision making process that was used to arrive at the proposed project and how the project has plans to achieve long-term success and sustainability. Provide information showing the level of support and commitment the City has for the project. Provide examples of past performance on other water quality projects, including Ecology funded projects.

Information for Input into the Form:

Project Selection Process

HDR, under contract with King County Water and Land Resources Division (WLRD), conducted the Miller-Walker Basin Stormwater Retrofit Study to determine where stormwater retrofits are most needed based on watershed-scale hydrologic modeling, assess the feasibility of installing retrofits in those priority areas, identify candidate retrofit projects, evaluate and rank the projects, and advance the highest priority projects to a pre-engineering stage of development.

The study began with a review of existing data and planning documents provided by the Basin Partners (King County, City of Burien, City of Normandy Park, City of Seatac, and WSDOT). Available soil and groundwater information from past studies and Geographic Information System (GIS) data were reviewed, including topography, subbasin boundaries, slopes, parcel and right-of-way boundaries, land use, impervious areas, zoning, critical areas, stormwater infrastructure, and historical flooding locations. Transportation Improvement Plans, Capital Improvement Project Plans, Park and Open Space Improvement Plans, and Bike and Pedestrian Improvements Plans were also reviewed to identify opportunities where stormwater retrofits could be coupled with other planned projects to best leverage public dollars and minimize construction impacts to the neighborhood.

Aspect (2014) conducted an *Infiltration Feasibility Assessment* to evaluate the feasibility of shallow and deep (i.e., approximately 10-feet-deep) infiltration across the basin. The results of this study were used in combination with a GIS evaluation of the above-mentioned data layers to identify site opportunities and constraints for retrofit projects. This evaluation resulted in identifying over 80 candidate retrofit sites across the basin.

With the basin-wide opportunities and constraints mapped and the over 80 feasible opportunities identified, HDR conducted a “Level I” analysis to evaluate, rank, and prioritize the top 30 projects for further evaluation in the field. This Level I analysis evaluated the feasibility, risk, and benefit of each of the initial 80 projects based on the following criteria: subbasin retrofit need, connectivity to the storm conveyance system, risk to the environment, site slope, and infiltration feasibility.

Subbasin retrofit need was based on hydrologic modeling of the basin conducted by MGS Engineers (2014a) using a calibrated Hydrologic Simulation Program – FORTRAN model. The model was run under existing conditions, taking into account any flow control facilities of significance already installed in the basin. The long-term continuous model results were then used to evaluate the spatial distribution of runoff rates, Benthic Index of Biotic Integrity (B-IBI) estimates based on simulated runoff statistics, and the amount of stormwater retrofits needed to improve stream flows and aquatic conditions in the basin. Connectivity to the storm conveyance system was based on GIS evaluation of the degree of connectivity to stormwater trunk main lines (i.e., a site that sheet flows into vegetated areas under existing conditions would have a relatively lower retrofit need than a site that contributes directly to a stormwater conveyance trunk facility, contributing relatively higher peak flow rates to the creek more quickly). Risk to the environment was evaluated in GIS based on proximity to creek buffers and other environmentally sensitive areas, site slope was evaluated based on GIS slope data, and

infiltration feasibility for shallow and deep infiltration was based on the findings of the *Infiltration Feasibility Evaluation* (Aspect 2014). See Attachment D for the inputs, assumptions, and results of the Level I evaluation.

The highest ranking 30 projects identified in the Level I evaluation were advanced for further evaluation in the field, termed "Level II" analysis. The information collected in the field was used to refine the initial project rankings and select the 6 highest ranking projects for preliminary pre-engineering design. The Level II ranking criteria included: helps achieve multiple goals (i.e., flow control, water quality, ability to be constructed as part of other planned improvements), educational opportunities (i.e., project visibility, opportunities for hands-on support from the community), impervious area managed (i.e., amount of impervious and pollution-generating impervious area managed), local/subbasin retrofit need, risks to private property, constructability, land ownership (i.e., public, private, need to coordinate land acquisition or easements), relative ease of securing grant funding, and available space to construct retrofits.

Based on this planning framework implemented for the Miller-Walker Creek watershed, the Moshier Park LID Retrofit project ranked as the number one highest priority project for improving creek conditions. For detailed information on the GIS data, scoring criteria, and application of the scoring for the Level I and Level II analyses, see Attachment D.

The hydrologic performance of the top 30 projects was simulated using the calibrated HSPF model discussed above. The model was used to develop flood frequency statistics and mean daily discharge values for each subbasin, with and without the proposed retrofits. These values were used to calculate the sub-basin-scale metrics for peak flow reduction, high pulse count reduction, and B-IBI score increases. Table 7 summarizes the modeling results for the subbasin in which the Moshier Park LID Retrofit Project is located (Subbasin M10). Attachment E provides a copy of the *Hydrologic Performance of top 30 Projects* memorandum (MGS 2015).

Table 7. Creek Improvement Metrics Modeled in HSPF

Metric	Existing Conditions	With 30 Highest Ranking LID Retrofit Projects	% Change
2-year Peak Flow	21.1	15.2	27% Decrease
High Pulse Count Reduction (Average # High Pulses/Year)	27.2	23.9	12% Decrease
High Pulse Count Reduction (Average High Pulse Range/Year [days])	322	305	5% Decrease
B-IBI Scores	17.3	19.2	11% Increase

Field testing was conducted for the top six sites, including the Moshier Park sites, to provide preliminary site specific evaluation of infiltration feasibility and long-term design infiltration rates to be used in pre-engineering. The findings from the testing are provided in the *City of Burien*

Preliminary Infiltration Feasibility Technical Memorandum (Martin 2014) included as Attachment F. The three vactor borings conducted indicate that the soils vary across the site. Sandy soils were observed both in the parking lot west of the Moshier Park Community Art building and approximately 50 feet east of the northwest corner of the parking lot. These areas are expected to be highly conducive to shallow infiltration. Peat soils were observed in the northwest corner of the site, near the proposed location of the northern infiltration gallery.

The report recommends additional soils testing to determine the extents of the peat and alluvium layers in order to identify preferred locations for the proposed BMPs. In particular, the infiltration gallery proposed for the northwest corner of the site, will most likely need to be relocated to an area with soils that are more suitable for shallow infiltration.

References

Aspect 2014. *Infiltration Feasibility Assessment for Miller-Walker Basin Stormwater Retrofit Planning Study*. Prepared by Aspect Consulting, LLC (Aspect) for King County. July 17 2014.

Burien 2000. *Park, Recreation, and Open Space Plan for the City of Burien*. 2000.

Ecology 2011. *Draft Western Washington Phase II Municipal Permit Fact Sheet*. Prepared by Washington State Department of Ecology (Ecology) Water Quality Program. November 4, 2011.

Ecology 2012. *Stormwater Management Manual for Western Washington* (2012 Ecology Manual). Prepared by Washington State Department of Ecology Water Quality Program. August 2012.

Ecology 2013. *Western Washington Low Impact Development (LID) Operation and Maintenance (O&M) Guidance Document*. Prepared by Herrera Environmental Consultants, Inc. and Washington Stormwater Center for the Washington State Department of Ecology. May 31, 2013.

Ecology 2014a. *Funding Guidelines for State Fiscal Year 2016, Water Quality Financial Assistance*. Prepared by Washington State Department of Ecology Water Quality Program. August 2014.

Ecology 2014b. *2012 Stormwater Management Manual for Western Washington, as Amended in December 2014 (The 2014 SWMMWW).* Prepared by Washington State Department of Ecology Water Quality Program. December 2014.

Geosyntec and Wright Water Engineers 2012. *International Stormwater Best Management Practice (BMP) Database Pollutant Category Summary Statistical Addendum: TSS, Bacteria, Nutrients, and Metals.* Prepared by Geosyntec Consultants, Inc. and Wright Water Engineers, Inc. under support from Water Environment Research Foundation, Federal Highway Administration, and the Environmental and Water Resources Institute of the American Society of Civil Engineers. July 2012.

King County 2006. *Miller and Walker Creeks Basin Plan: Executive Proposed*. Prepared by The Resources Group Consultants, Inc. for the City of Burien, City of Normandy Park, City of SeaTac, King county, Port of Seattle, and Washington State Department of Transpiration. February 2006.

King County 2012. *Stormwater Retrofit Analysis and Recommendations for Juanita Creek Basin in the Lake Washington Watershed*. Prepared by King County Water and Land Resources Division, Science and Stormwater Services Section. August 2012.

King County 2014. *Salmon Monitoring Program: Community Salmon Investigation (CSI) for Highline.* Website: http://www.kingcounty.gov/environment/watersheds/central-puget-sound/miller-walker-creeks/salmon-monitoring.aspx. Updated October 2014.

King County 2013. *Miller/Walker Creek Monitoring Activities for 2013*. Prepared by Eric Ferguson, Daniel Smith, David Funke, and Dean Wilson; King County Water Quality Planners. April 9, 2014.

Martin 2014. *City of Burien Preliminary Infiltration Feasibility Technical Memorandum*. Prepared by Richard Martin Groundwater LLC. November 3, 2014.

MGS 2014a. Technical Memorandum regarding *Assessment of Current Runoff Rates and Retrofit Needed to Meet Specified Targets in the Miller and Walker Creek Watersheds.* Prepared by MGS Engineering Consultants, Inc. (MGS) for HDR. July 18, 2014.

MGS 2015. *Miller-Walker Stormwater Retrofit Analysis; Hydrologic Performance of Top 30 Projects*. Prepared by Bruce Barker of MGS Engineering Consultants, Inc. March 2015.

WERF 2009. *BMP and LID Whole Life Cost Model, Version 2.0*. Developed by the Water Environment Research Foundation (WERF). May 9, 2009.

WERF et al. 2012. *International Stormwater BMP Database (ISBMPD) Pollutant Category Summary Statistical Addendum*, July 2012, sponsored by Water Environment Research Foundation (WERF), the American Society of Civil Engineers (ASCE) / Environmental and Water Resources Institute (EWRI), the American Public Works Association (APWA), the Federal Highway Administration (FHWA), and U.S. Environmental Protection Agency (EPA). 2012.

WSUPREC et al. 2012. *Low Impact Development Technical Guidance Manual for Puget Sound (LID Technical Guidance Manual)*. Prepared by Washington State University Puyallup Research and Extension Center (WSUPREC) and Puget Sound Partnership. December 2012.

This page intentionally left blank.

Attachment A

Cost Estimate

This page intentionally left blank.

CONCEPTUAL DESIGN PLANNING-LEVEL CONSTRUCTION COST ESTIMATE

Moshier Park and Community Art Center (430 S 156th St)

PREPARED BY: John Erickson P.E. DATE: 11/03/14

QUANTITY	UNIT	ITEM	UNIT COST	AMOUNT
1	L.S.	MOBILIZATION	8.0%	$260,533
1	L.S.	TEMPORARY WATER POLLUTION/EROSION CONTROL	3.0%	$97,700
1	L.S.	SPCC PLAN	$1,000	$1,000
165	L.F.	DRAIN PIPE 8 IN. DIAM.	$32	$5,280
335	LF.	SCHEDULE A STORM SEWER PIPE 12 IN. DIAM.	$40	$13,400
4	EA.	CATCH BASIN TYPE 2 48 IN. DIAM.	$2,000	$8,000
20	EA.	STORM DRAIN CLEANOUT	$670	$13,400
10	EA.	OVERFLOW STRUCTURE	$800	$8,000
4401	S.F.	BIORETENTION	$35	$154,035
99585	S.F.	PERMEABLE PAVEMENT	$25	$2,489,625
4128	C.F.	SILVA CELL	$16	$66,048
1	L.S.	INFILTRATION GALLERY	$395,575	$395,575
1	L.S.	PRE-TREATMENT SYSTEM [a]	$31,500	$31,500
5500	S.F.	UPLAND LANDSCAPING	$10	$55,000
600	S.F.	GREEN ROOF SYSTEM	$18	$10,800
1	EA.	ROOF CISTERN [b]	$5,000	$5,000
			Subtotal:	**$3,614,896**
		ITEM TOTAL		
		CONSTRUCTION ENGINEERING [c]		$596,000
		ENGINEERING SERVICES DURING CONSTRUCTION [d]		$141,000
		CONTINGENCIES	50%	$1,807,448
		CITY FORCE WORK	$20,000	$20,000
		SALES TAX		$0
		ESTIMATED PROJECT TOTAL		
			Total Conceptual Design Planning-Level Cost [e] :	**$6,179,344**

Notes:

CF Cubic Feet
EA Each
L.S. Lump Sump
S.F. Square Feet

a) Pre-treatment system based on one (1) Vortech-1000 series and one (1) Vortech-2000 series, to provide pre-treatment prior to infiltrating road and turf runoff in the infiltration galleries. Installed costs provided by Stephanie Jacobsen, Contech Engineering Solutions via e-mail to Robin Kirschbaum, HDR on 10-23-14.

b) Roof Cistern cost assumes a 3000 gallon above ground galvanized steel tank, leveling pad, 100 feet of piping, and earthquake straps.

c) Construction Engineering includes project management and preparation of final plans, specification, and estimates.

d) Engineering Services During Construction includes time and expenses for the Project Manager, Lead Civil, Lead Landscape Architect, and Hydrogeologist to attend construction meetings, prepare responses to contractor and design changes if needed, and observe excavation and placement of materials as directed in the plans.

e) Total Conceptual Design Planning-Level Cost does not include costs for the conversion of the ball fields to artificial turf. Those costs will be covered outside of this project (Burien 2000).

This page intentionally left blank.

Attachment B

Preliminary Engineering Plans

This page intentionally left blank.

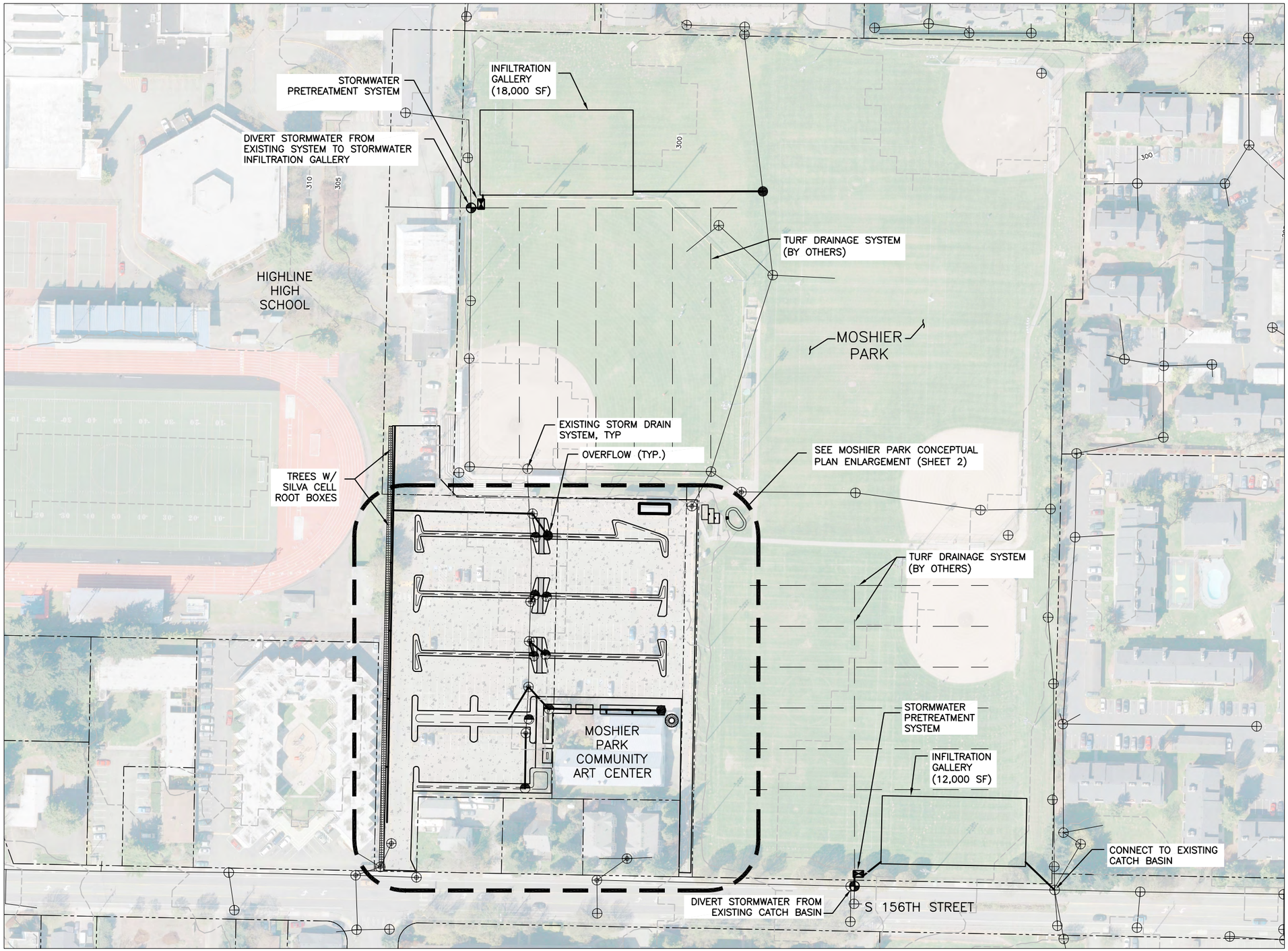

LEGEND

- EXISTING 5-FOOT CONTOUR
- RIGHT OF WAY
- EXISTING STORM DRAIN PIPE
- EXISTING STORM DRAIN STRUCTURE
- NEW OVERFLOW STRUCTURE
- NEW CATCH BASIN
- NEW DIVERSION STRUCTURE
- NEW STORMWATER TREATMENT SYSTEM
- TREES W/ SILVA CELL ROOT BOXES
- BIORETENTION CELL TOP AREA
- BIORETENTION CELL BOTTOM AREA
- UNDERDRAIN
- NEW STORM DRAIN PIPE

0 60' 120' 240'

SCALE: 1" = 120'

No.	REVISION	BY	APP'D	DATE

HDR

NOT FOR CONSTRUCTION

DESIGNED/DRAWN:	QA/QC:
PROJECT ENGINEER:	SCALE:
DESIGN APPROVAL:	ONE INCH (REFERENCE)
PROJECT ACCEPTANCE:	CONTRACT NO:

King County

DEPARTMENT OF NATURAL RESOURCES & PARKS
WATER AND LAND RESOURCES DIVISION

MILLER-WALKER BASIN STORMWATER RETROFIT

PROJECT B-29/31
MOSHIER PARK & COMM. ART CENTER
CONCEPTUAL SITE LAYOUT

DCN:	
DATE:	NOVEMBER 2014
PROJECT FILE NO:	
DRAWING NO:	
SHEET NO:	1 OF

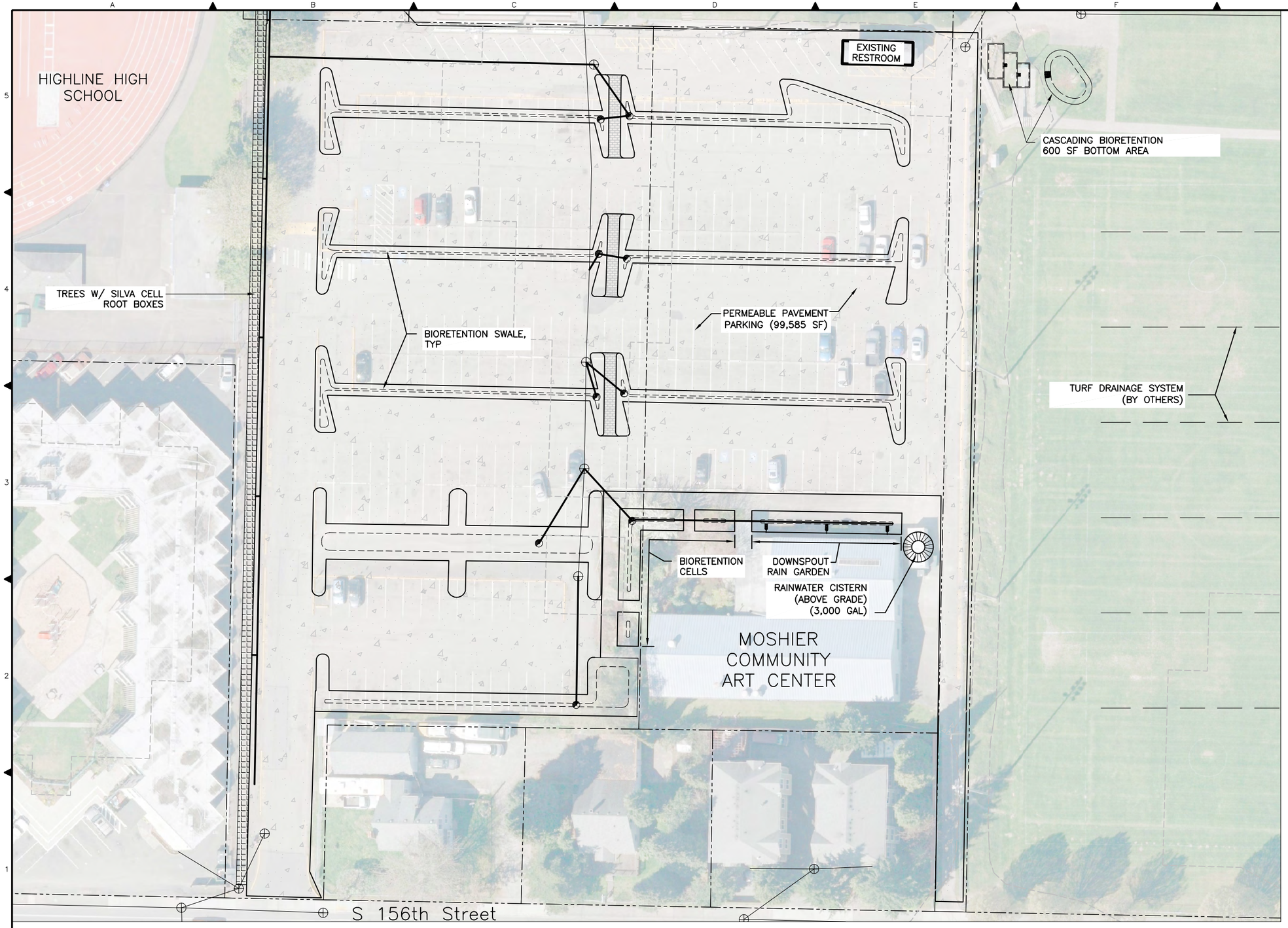

LEGEND

- EXISTING 5-FOOT CONTOUR
- RIGHT OF WAY
- EXISTING STORM DRAIN PIPE
- EXISTING STORM DRAIN STRUCTURE
- NEW OVERFLOW STRUCTURE
- NEW CATCH BASIN
- NEW DIVERSION STRUCTURE
- NEW STORMWATER TREATMENT SYSTEM
- TREES W/ SILVA CELL ROOT BOXES
- BIORETENTION CELL TOP AREA
- BIORETENTION CELL BOTTOM AREA
- UNDERDRAIN
- NEW STORM DRAIN PIPE

0 25 50 100

Scale: 1 inch = 50 feet

No.	REVISION	BY	APP'D	DATE

HDR

NOT FOR CONSTRUCTION

DESIGNED/DRAWN:	QA/QC:
PROJECT ENGINEER:	SCALE:
DESIGN APPROVAL:	ONE INCH (REFERENCE)
PROJECT ACCEPTANCE:	CONTRACT NO:

King County

DEPARTMENT OF NATURAL RESOURCES & PARKS
WATER AND LAND RESOURCES DIVISION

MILLER-WALKER BASIN STORMWATER RETROFIT

PROJECT B-29/31
MOSHIER PARK & COMM. ART CENTER
CONCEPTUAL SITE PLAN

DCN:	
DATE:	NOVEMBER 2014
PROJECT FILE NO:	
DRAWING NO:	
SHEET NO:	2 OF

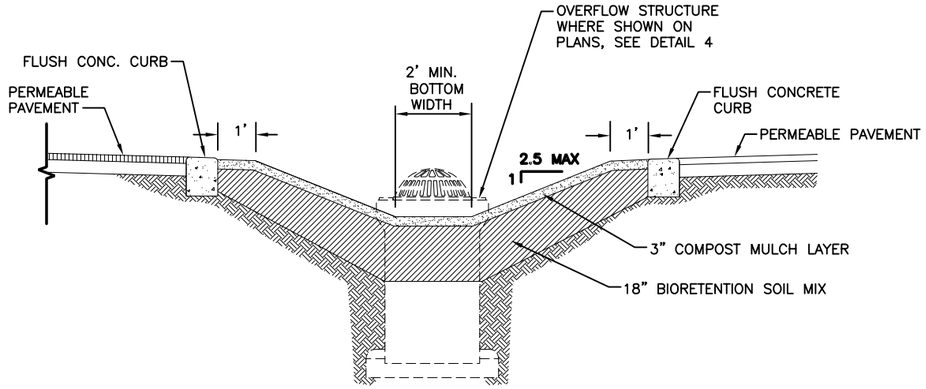

TYPICAL BIORETENTION SWALE CROSS SECTION

DETAIL 1

NTS TYP

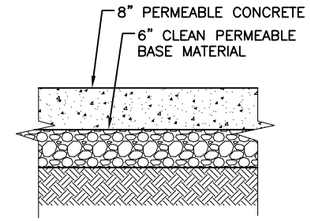

TYPICAL PERMEABLE CONCRETE CROSS SECTION

DETAIL 2

NTS

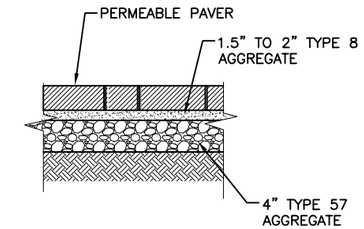

TYPICAL PERMEABLE PAVER CROSS SECTION

DETAIL 3

NTS

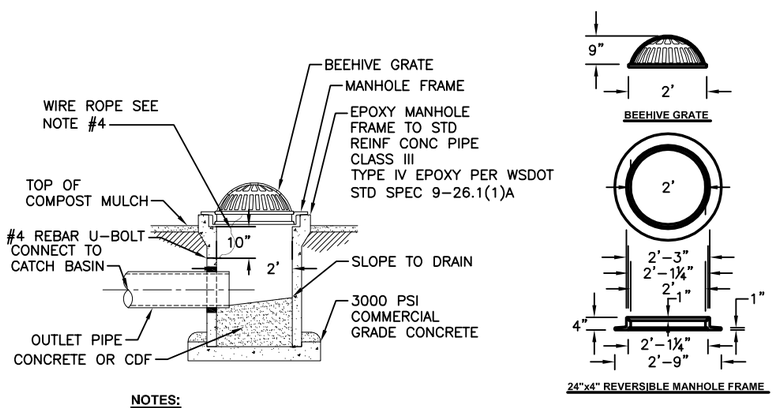

NOTES:

1. SECURE GRATE IN PLACE WITH 54-INCHES OF WIRE ROPE. LOOP ENDS OF WIRE ROPE AROUND U-BOLT AND GRATE. CRIMP EACH END OF WIRE ROPE WITH 3" OVERLAP.
2. DRILL 2" DEEP HOLES INTO PIPE AND EPOXY #4 REBAR U-BOLT (2"x4") IN HOLES.
3. GRATE TO BE CAST IRON, ASTM A48 CL30.
4. WIRE ROPE TO BE 1/8" – 3/16" STAINLESS STEEL, 7 STRANDS OF 19 WIRES.

OVERFLOW STRUCTURE

DETAIL 4

NTS TYP

No.	REVISION	BY	APP'D	DATE

HDR

NOT FOR CONSTRUCTION

DESIGNED/DRAWN: | QA/QC:
PROJECT ENGINEER: | SCALE:
DESIGN APPROVAL: | ONE INCH (REFERENCE)
PROJECT ACCEPTANCE: | CONTRACT NO:

King County

DEPARTMENT OF NATURAL RESOURCES & PARKS
WATER AND LAND RESOURCES DIVISION

MILLER-WALKER BASIN STORMWATER RETROFIT

PROJECT B-29/31
MOSHIER PARK & COMM. ART CENTER
CONCEPTUAL DESIGN DETAILS

DCN:
DATE: NOVEMBER 2014
PROJECT FILE NO:
DRAWING NO:
SHEET NO: 3 OF

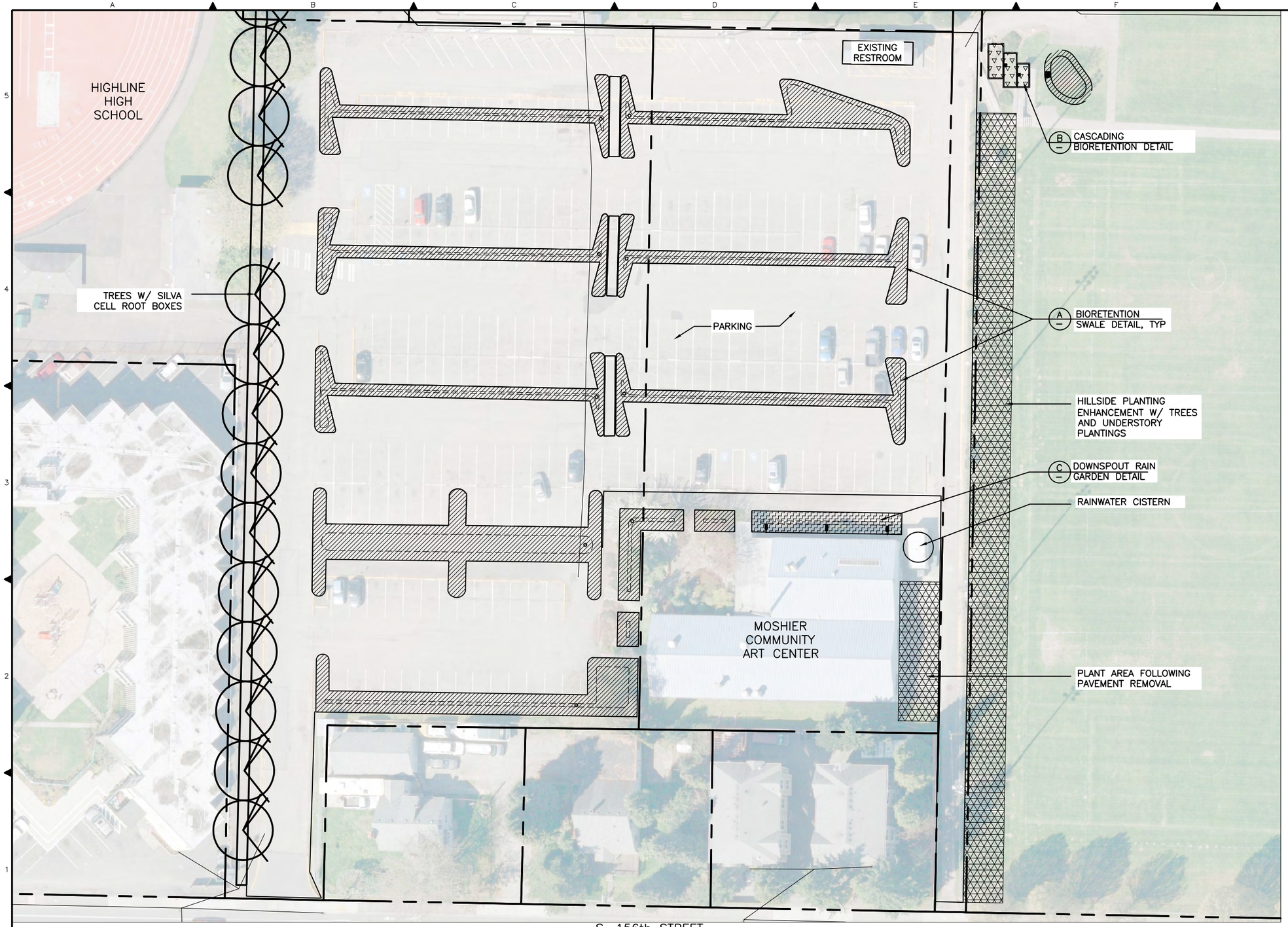

LEGEND

- BIORETENTION SWALE
- DOWNSPOUT RAIN GARDEN
- CASCADING BIORETENTION
- PLANTING ENHANCEMENTS/ IMPERVIOUS SURFACE REDUCTION
- TREE IN SILVA CELL ROOT BOX

0 25' 50' 100'

No.	REVISION	BY	APP'D	DATE

HDR

NOT FOR CONSTRUCTION

DESIGNED/DRAWN: | QA/QC:
PROJECT ENGINEER: | SCALE:
DESIGN APPROVAL: | ONE INCH (REFERENCE)
PROJECT ACCEPTANCE: | CONTRACT NO:

King County

DEPARTMENT OF NATURAL RESOURCES & PARKS
WATER AND LAND RESOURCES DIVISION

MILLER–WALKER BASIN STORMWATER RETROFIT

PROJECT B–29/31
MOSHIER PARK & COMM. ART CENTER
CONCEPTUAL PLANTING DESIGN

DCN:
DATE: NOVEMBER 2014
PROJECT FILE NO:
DRAWING NO:
SHEET NO: 4 OF

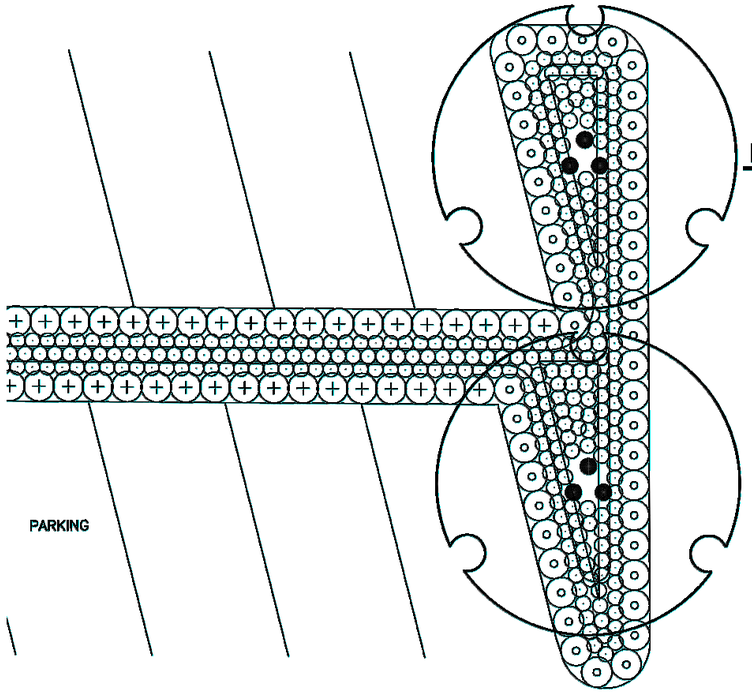

BIORETENTION PLANTING LEGEND

	QTY	PLANT NAME
TREES		
	3	Acer circinatum / Vine maple
SHRUBS		
	30	Cornus sericea 'Kelseyi' / Kelseyi Dogwood
	28	Polystichum munitum / Sword Fern
GROUNDCOVER/PERENNIALS		
	26	Blechnum spicant / Deer Fern
	20	Hemerocallis vars. / Daylily
	100	Iris douglasii / Douglas Iris
	127	Juncus effusus / Soft Rush
	127	Juncus patens 'Elk Blue' / Elk Blue California Gray Rush

A — TYPICAL BIORETENTION CELL PLANTING DETAIL

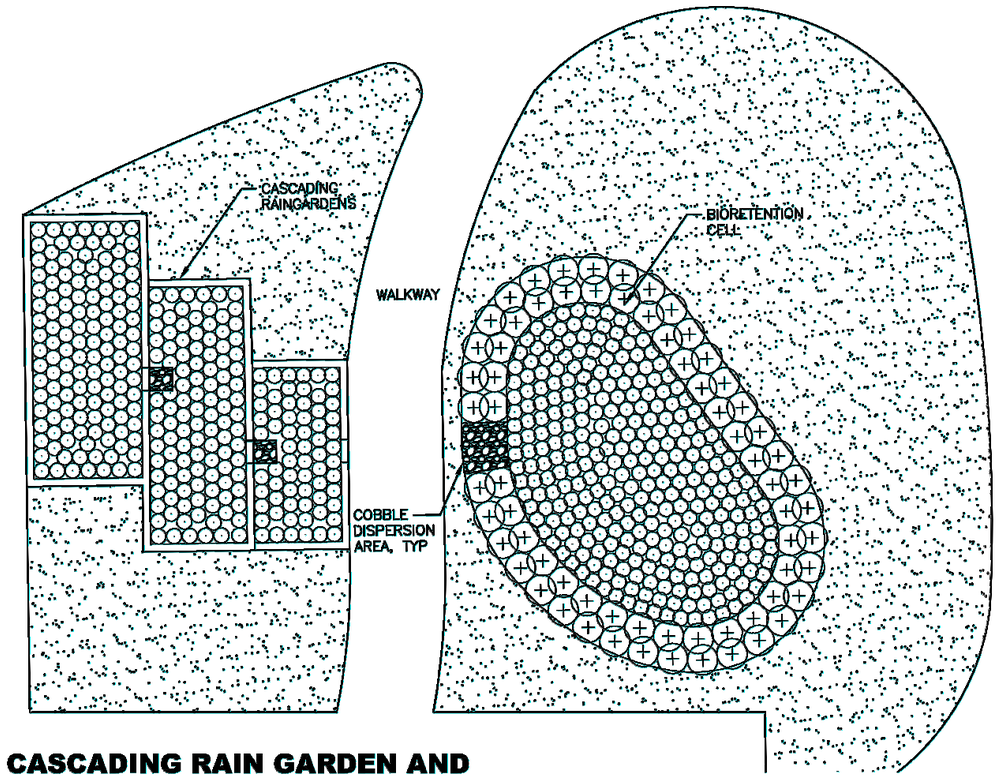

CASCADING RAIN GARDEN AND BIORETENTION CELL PLANTING LEGEND

	QTY	PLANT NAME
SHRUBS		
	68	Cornus sericea 'Kelseyi' / Kelseyi Dogwood
GROUNDCOVER/PERENNIALS		
	50	Acorus gramineus 'Ogon' / Golden Dwarf Sweet Flag
	50	Acorus gramineus 'Varigatus' / Variegated Sweet Flag
	50	Carex obnupta / Slough Sedge
	55	Carex stipata / Sawbeak Sedge
	50	Carex 'Ice Dance" / Variegated Sedge
	50	Carex elata 'Aurea" / Bowles Golden Sedge
	50	Iris douglasii / Douglas Iris
	50	Iris ensata and cultivars / Japanese Iris
	50	Juncus patens 'Elk Blue' / Elk Blue California Gray Rush
	50	Juncus tenuis / Slender Rush
	50	Juncus ensifolius / Dagger-leaf Rush
	50	Scirpus microcarpus /Small-fruited Bulrush

B — CASCADING RAIN GARDEN BIORETENTION CELL PLANTING DETAIL

No.	REVISION	BY	APP'D	DATE

NOT FOR CONSTRUCTION

HDR

HBB LANDSCAPE ARCHITECTURE

DESIGNED/DRAWN: | QA/QC:
PROJECT ENGINEER: | SCALE:
DESIGN APPROVAL: | ONE INCH (REFERENCE)
PROJECT ACCEPTANCE: | CONTRACT NO:

King County

DEPARTMENT OF NATURAL RESOURCES & PARKS
WATER AND LAND RESOURCES DIVISION

MILLER–WALKER BASIN STORMWATER RETROFIT

PROJECT B–29/31
MOSIER PARK & COMM. ART CENTER
CONCEPTUAL PLANTING DETAILS – 1

DCN:
DATE: NOVEMBER 2014
PROJECT FILE NO:
DRAWING NO:
SHEET NO: 5 OF

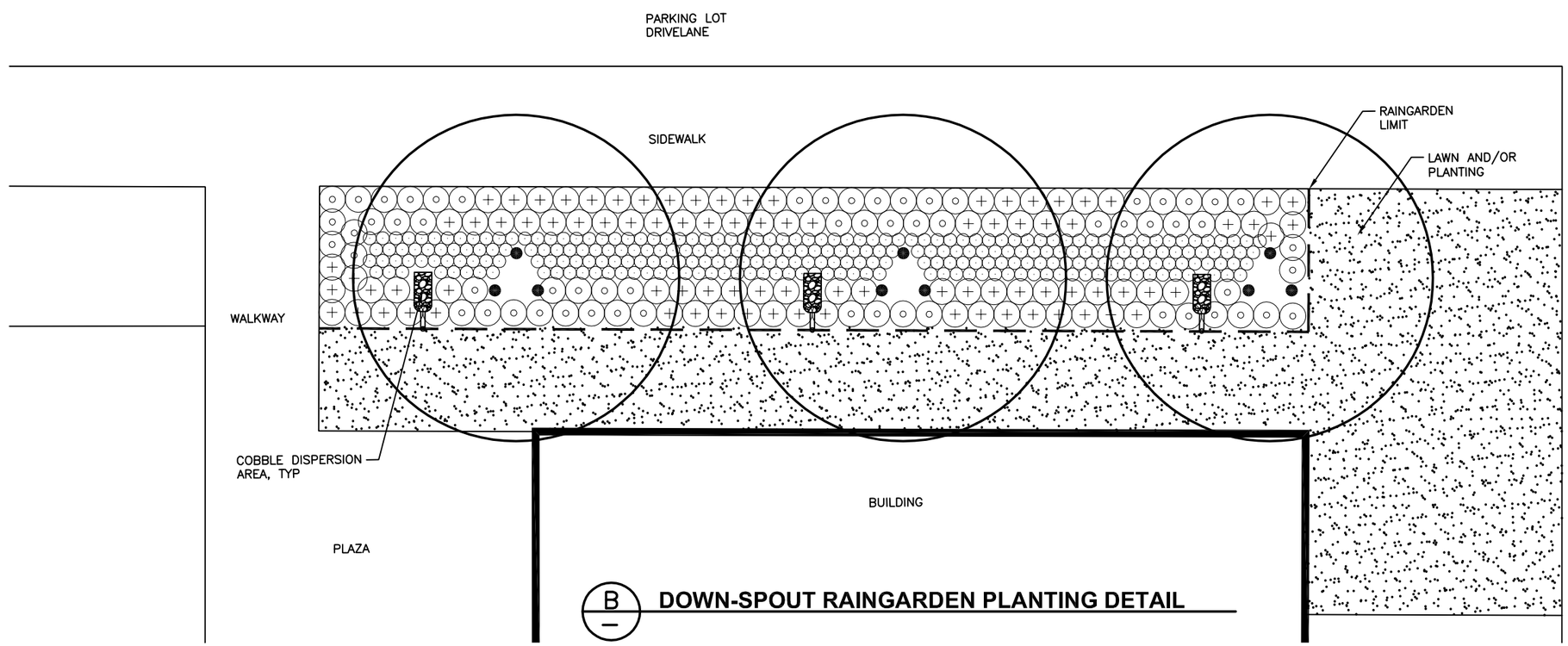

B — DOWN-SPOUT RAINGARDEN PLANTING DETAIL

DOWN-SPOUT RAINGARDEN PLANTING LEGEND

TREES	QTY	PLANT NAME
	3	Betula papyrifera / Paperbark Birch
SHRUBS		
	44	Cornus sericea 'Kelseyi' / Kelseyi Dogwood
	44	Polystichum munitum / Sword Fern
GROUNDCOVER/PERENNIALS		
	21	Blechnum spicant / Deer Fern
	20	Fragaria chiloensis / Beach Strawberry
	20	Hemerocallis vars. / Daylily
	120	Deschampsia cespitosa / Tufted Hair Grass
	141	Juncus effusus / Soft Rush

No.	REVISION	BY	APP'D	DATE

HDR

NOT FOR CONSTRUCTION

HBB LANDSCAPE ARCHITECTURE

DESIGNED/DRAWN: | QA/QC:
PROJECT ENGINEER: | SCALE:
DESIGN APPROVAL: | ONE INCH (REFERENCE)
PROJECT ACCEPTANCE: | CONTRACT NO:

King County

DEPARTMENT OF NATURAL RESOURCES & PARKS
WATER AND LAND RESOURCES DIVISION

MILLER–WALKER BASIN STORMWATER RETROFIT

PROJECT B–29/31
MOSIER PARK & COMM. ART CENTER
CONCEPTUAL PLANTING DETAILS – 2

DCN:
DATE: NOVEMBER 2014
PROJECT FILE NO:
DRAWING NO:
SHEET NO: 6 OF

Attachment C

Operations and Maintenance Guidelines

Bioretention

Permeable Pavement

Pre-Treatment

Infiltration Gallery

Pipes

Structures

This page intentionally left blank.

Table 1. Maintenance Standards and Procedures for All LID BMPs.				
Category	Recommended Frequency		Condition when Maintenance is Needed (Standards)	Action Needed (Procedures)
	Inspection	Routine Maintenance		
General				
Facility presence	All visits		None (ongoing inspections)	Inspect to ensure the facility is present on site as shown on the as-built (or record drawings) and previous photos.
Spill Prevention and Response				
Spill prevention	Ongoing		None (ongoing inspections)	All sites must implement BMPs to prevent hazardous or solid wastes or excessive oil and sediment from contaminating stormwater.
Spill cleanup	As needed		Release of pollutants	• Call your local or regional hotline number to report any spills or other illicit discharges • Clean up spills as soon as possible to prevent contamination of stormwater • Restore BMP facility design and function per the record drawings
Pests				
Pest management	As needed		Pest of concern is present and impacting BMP facility function	• Pesticide use should be generally discouraged, even conditionally prohibited in some cases • Pesticides include the following: herbicides, fungicides, insecticides, rodenticides, and pediculicides • If pesticide use is planned in or near LID BMPs, make sure to check the following current regulations: 1) Federal- Environmental Protection Agency (EPA) Federal Insecticide and Rodenticide Act 2) State- Ecology, Washington State Department of Agriculture, Washington Department of Fish and Wildlife, Natural Resources Conservation Services 3) Local city or county ordinances/codes, and/or applicable Integrated Pest Management (IPM) plan • For the protection of health and safety, check the following: 1) Washington State Department of Labor & Industries 2) Washington State Department of Health (local branch if applicable)

Equipment and Materials

Table 2 includes recommendations for equipment and materials common to all LID BMPs included in this guidance document.

Table 2. Equipment and Materials List for All LID BMPs.

- ☐ **Camera**
- ☐ **Safety gear/equipment (including boots, long sleeves and pants, gloves, eye and ear protection, and/or high visibility safety vest)**
- ☐ **Shovel (to check depth and condition of soils)**
- ☐ **Measuring tape**
- ☐ **Photos, reports, and/or checklists from past maintenance visits (to help identify changes such as thinning plants and changing pavement conditions)**
- ☐ **Copy of the site's O&M manual or maintenance plan**
- ☐ **O&M checklist**
- ☐ **As-built (i.e., record) drawings of the facility, including site drawings with facility location(s)**
- ☐ **Manufacturer information (if applicable)**

Skills

The required skills common to maintenance of all LID BMPs are listed in the text box to the right.

Skills Needed for Maintenance of all LID BMPs

- Understanding of as-built (or record) drawings of the facility
- Understanding of facility design and intent (to identify issues that would inhibit function)
- General labor (manual tool skills)

Bioretention Facilities

Bioretention facilities are engineered facilities that store and treat stormwater by filtering it through a specified soil profile. Water that enters the facility ponds in an earthen depression or other basin (e.g., concrete planter) before it infiltrates into the underlying bioretention soil. Stormwater that exceeds the surface storage capacity overflows to an adjacent drainage system. Treated water is either infiltrated into the underlying native soil or collected by an underdrain and discharged. Bioretention facilities are considered Stormwater Treatment and Flow Control BMPs/Facilities when used to help meet Minimum Requirements #6 (treatment), #7 (flow control), or both.

Key Maintenance Considerations

The main components of bioretention facilities are listed below with descriptions of their function and key maintenance considerations.

- **Inlet**: Stormwater can flow into a bioretention facility in a number of ways including: dispersed flow across vegetated areas, sheet flow across impervious areas, or concentrated flow through curb cuts and/or piped flow inlets. Inlets must be maintained to be unobstructed to ensure that stormwater enters the facility as designed. Erosion control measures must also be maintained in areas of concentrated flows (e.g., pipes inlets or narrow curb cuts).
- **Facility footprint**: The facility footprint is typically an earthen depression or another type of basin (e.g., concrete planter box) that provides surface storage for stormwater before it infiltrates into the underlying bioretention soil. If the facility is located on a slope, low permeability check dams may be included (oriented perpendicular to the slope) to encourage ponding. Key maintenance considerations for the facility footprint include the following:
    - The integrity of earthen berms and basin walls must be maintained, soil areas must be protected from erosion, and accumulated sediment must be removed.
    - Bioretention facilities are designed to infiltrate all ponded water within a 24- to 48-hour “drawdown” time after the end of a storm. This allows the soil to dry out periodically in order to restore the hydraulic capacity of the system and prevent conditions supportive of mosquito breeding. Slower drawdown times may indicate that the underdrain (if present) is plugged or the bioretention soil is overly compacted, clogged, or does not meet design specifications. Corrective maintenance may include clearing underdrain obstructions or partial or complete replacement of bioretention soil to restore bioretention facility function.
- **Bioretention soil**: Infiltration of stormwater through the engineered bioretention soil mix provides water quality treatment. All maintenance activities must be performed in a manner to prevent compaction of the bioretention soil.
- **Mulch**: The bioretention soil is covered by a layer of mulch, comprised of arborist wood chips, compost, and/or rocks. Mulch reduces weed establishment. Organic

mulches regulate soil temperatures and moisture, and add organic matter to soil. The mulch layer must be supplemented regularly.

- **Vegetation**: Bioretention systems rely on vegetation (i.e., grasses, shrubs, and sometimes trees) to intercept, uptake, and evapotranspire stormwater. In addition, plant roots improve soil structure and increase infiltration capacity. Regular maintenance activities associated with vegetation include weeding and pruning. Plants also require irrigation during the first 2 to 3 years of establishment and during extended dry periods.
- **Overflow**: Flows exceeding the capacity of the facility are discharged via an overflow structure (e.g., pipe, curb cut, earthen channel). It is important to maintain clear outlet pipes and overflow structures to ensure that stormwater can be safely conveyed to a designated discharge point (e.g., storm drain system).
- **Underdrains (optional)**: Underdrains are optional components of a bioretention facility that may be included in bioretention systems where, for example, infiltration to underlying soil is not prudent or feasible. Underdrains are installed under the bioretention soil layer to collect and convey treated water. An underdrain system can be comprised of perforated or slotted pipe, wrapped in an aggregate blanket. It is important to maintain clear drains so that water moves through system as designed. Maintenance may include occasional cleaning to remove plant roots or debris. If underdrains are equipped with a flow restrictor (e.g., orifice) to attenuate flows, the orifice must be inspected and cleaned regularly.

Nutrient sensitivity of the receiving water is also an important maintenance consideration, particularly in watersheds draining to phosphorous limited water bodies. The addition of excess fertilizers to the system and/or systems operating in bypass, can increase the potential for export of phosphorous found in bioretention soil or compost and increase nutrient loads to downstream receiving waters.

Key Operations to Preserve Facility Function

For a bioretention system to function properly, stormwater must infiltrate freely through the bioretention soil. The soil infiltration rate can be reduced if the soil is subject to compaction (e.g., foot and vehicle traffic loads). To limit the likelihood of corrective maintenance (e.g., bioretention soil replacement), the facility footprint area should be protected from external loads. Because the risk of compaction is higher when soils are saturated, any type of loading in the bioretention facility (including foot traffic) should be avoided during wet conditions.

Signage can also be used to identify the vegetated area as a stormwater BMP and inform maintenance crews and the general public about protecting the facility's function.

Maintenance Standards and Procedures

Table 3 provides the recommended maintenance frequencies, standards, and procedures for bioretention facility components. The level of routine maintenance required and the frequency of corrective maintenance actions may increase for facilities subject to high sediment loads from the contributing drainage area.

Table 3. Maintenance Standards and Procedures for Bioretention Facilities.

Component	Recommended Frequency [a]		Condition when Maintenance is Needed (Standards)	Action Needed (Procedures)
	Inspection	Routine Maintenance		
Facility Footprint				
Earthen side slopes and berms	B, S		Erosion (gullies/ rills) greater than 2 inches deep around inlets, outlet, and alongside slopes	• Eliminate cause of erosion and stabilize damaged area (regrade, rock, vegetation, erosion control matting) • For deep channels or cuts (over 3 inches in ponding depth), temporary erosion control measures should be put in place until permanent repairs can be made. • Properly designed, constructed and established facilities with appropriate flow velocities should not have erosion problems except perhaps in extreme events. If erosion problems persist, the following should be reassessed: (1) flow volumes from contributing areas and bioretention facility sizing; (2) flow velocities and gradients within the facility; and (3) flow dissipation and erosion protection strategies at the facility inlet.
	A		Erosion of sides causes slope to become a hazard	Take actions to eliminate the hazard and stabilize slopes
	A, S		Settlement greater than 3 inches (relative to undisturbed sections of berm)	Restore to design height
	A, S		Downstream face of berm wet, seeps or leaks evident	Plug any holes and compact berm (may require consultation with engineer, particularly for larger berms)
	A		Any evidence of rodent holes or water piping in berm	• Eradicate rodents (see "Pest control") • Fill holes and compact (may require consultation with engineer, particularly for larger berms)
Concrete sidewalls	A		Cracks or failure of concrete sidewalls	• Repair/ seal cracks • Replace if repair is insufficient
Rockery sidewalls	A		Rockery side walls are insecure	Stabilize rockery sidewalls (may require consultation with engineer, particularly for walls 4 feet or greater in height)
Facility area		All maintenance visits (at least biannually)	Trash and debris present	Clean out trash and debris
Facility bottom area	A, S		Accumulated sediment to extent that infiltration rate is reduced (see "Ponded water") or surface storage capacity significantly impacted	• Remove excess sediment • Replace any vegetation damaged or destroyed by sediment accumulation and removal • Mulch newly planted vegetation • Identify and control the sediment source (if feasible) • If accumulated sediment is recurrent, consider adding presettlement or installing berms to create a forebay at the inlet
		During/after fall leaf drop	Accumulated leaves in facility	Remove leaves if there is a risk to clogging outlet structure or water flow is impeded
Low permeability check dams and weirs	A, S		Sediment, vegetation, or debris accumulated at or blocking (or having the potential to block) check dam, flow control weir or orifice	Clear the blockage
	A, S		Erosion and/or undercutting present	Repair and take preventative measures to prevent future erosion and/or undercutting
	A		Grade board or top of weir damaged or not level	Restore to level position

[a] Frequency: A = Annually; B = Biannually (twice per year); M = Monthly; W = At least one visit should occur during the wet season (for debris/clog related maintenance, this inspection/maintenance visit should occur in the early fall, after deciduous trees have lost their leaves); S = Perform inspections after major storm events (24-hour storm event with a 10-year or greater recurrence interval).

IPM – Integrated Pest Management

ISA – International Society of Arboriculture

Table 3 (continued). Maintenance Standards and Procedures for Bioretention Facilities.

Component	Recommended Frequency [a]		Condition when Maintenance is Needed (Standards)	Action Needed (Procedures)
	Inspection	Routine Maintenance		
Facility Footprint (cont'd)				
Ponded water	B, S		Excessive ponding water: Water overflows during storms smaller than the design event or ponded water remains in the basin 48 hours or longer after the end of a storm.	Determine cause and resolve in the following order: 1) Confirm leaf or debris buildup in the bottom of the facility is not impeding infiltration. If necessary, remove leaf litter/debris. 2) Ensure that underdrain (if present) is not clogged. If necessary, clear underdrain. 3) Check for other water inputs (e.g., groundwater, illicit connections). 4) Verify that the facility is sized appropriately for the contributing area. Confirm that the contributing area has not increased. If steps #1-4 do not solve the problem, the bioretention soil is likely clogged by sediment accumulation at the surface or has become overly compacted. Dig a small hole to observe soil profile and identify compaction depth or clogging front to help determine the soil depth to be removed or otherwise rehabilitated (e.g., tilled). Consultation with an engineer is recommended.
Bioretention soil media	As needed		Bioretention soil media protection is needed when performing maintenance requiring entrance into the facility footprint	• Minimize all loading in the facility footprint (foot traffic and other loads) to the degree feasible in order to prevent compaction of bioretention soils. • Never drive equipment or apply heavy loads in facility footprint. • Because the risk of compaction is higher during saturated soil conditions, any type of loading in the cell (including foot traffic) should be minimized during wet conditions. • Consider measures to distribute loading if heavy foot traffic is required or equipment must be placed in facility. As an example, boards may be placed across soil to distribute loads and minimize compaction. • If compaction occurs, soil must be loosened or otherwise rehabilitated to original design state.
Inlets/Outlets/Pipes				
Splash block inlet	A		Water is not being directed properly to the facility and away from the inlet structure	Reconfigure/ repair blocks to direct water to facility and away from structure
Curb cut inlet/outlet	M during the wet season and before severe storm is forecasted	Weekly during fall leaf drop	Accumulated leaves at curb cuts	Clear leaves (particularly important for key inlets and low points along long, linear facilities)
Pipe inlet/outlet	A		Pipe is damaged	Repair/ replace
	W		Pipe is clogged	Remove roots or debris
	A, S		Sediment, debris, trash, or mulch reducing capacity of inlet/outlet	• Clear the blockage • Identify the source of the blockage and take actions to prevent future blockages
		Weekly during fall leaf drop	Accumulated leaves at inlets/outlets	Clear leaves (particularly important for key inlets and low points along long, linear facilities)
		A	Maintain access for inspections	• Clear vegetation (transplant vegetation when possible) within 1 foot of inlets and outlets, maintain access pathways • Consultation with a landscape architect is recommended for removal, transplant, or substitution of plants
Erosion control at inlet	A		Concentrated flows are causing erosion	Maintain a cover of rock or cobbles or other erosion protection measure (e.g., matting) to protect the ground where concentrated water enters the facility (e.g., a pipe, curb cut or swale)

[a] Frequency: A = Annually; B = Biannually (twice per year); M = Monthly; W = At least one visit should occur during the wet season (for debris/clog related maintenance, this inspection/maintenance visit should occur in the early fall, after deciduous trees have lost their leaves); S = Perform inspections after major storm events (24-hour storm event with a 10-year or greater recurrence interval).

IPM – Integrated Pest Management

ISA – International Society of Arboriculture

Table 3 (continued). Maintenance Standards and Procedures for Bioretention Facilities.

Component	Recommended Frequency [a]		Condition when Maintenance is Needed (Standards)	Action Needed (Procedures)
	Inspection	Routine Maintenance		
Inlets/Outlets/Pipes (cont'd)				
Trash rack	S		Trash or other debris present on trash rack	Remove/dispose
	A		Bar screen damaged or missing	Repair/replace
Overflow	A, S		Capacity reduced by sediment or debris	Remove sediment or debris/dispose
Underdrain pipe	Clean pipe as needed	Clean orifice at least biannually (may need more frequent cleaning during wet season)	• Plant roots, sediment or debris reducing capacity of underdrain • Prolonged surface ponding (see "Ponded water")	• Jet clean or rotary cut debris/roots from underdrain(s) • If underdrains are equipped with a flow restrictor (e.g., orifice) to attenuate flows, the orifice must be cleaned regularly.
Vegetation				
Facility bottom area and upland slope vegetation	Fall and Spring		Vegetation survival rate falls below 75% within first two years of establishment (unless project O&M manual or record drawing stipulates more or less than 75% survival rate).	• Determine cause of poor vegetation growth and correct condition • Replant as necessary to obtain 75% survival rate or greater. Refer to original planting plan, or approved jurisdictional species list for appropriate plant replacements (See Appendix 3 - Bioretention Plant List, in the LID Technical Guidance Manual for Puget Sound). • Confirm that plant selection is appropriate for site growing conditions • Consultation with a landscape architect is recommended for removal, transplant, or substitution of plants
Vegetation (general)	As needed		Presence of diseased plants and plant material	• Remove any diseased plants or plant parts and dispose of in an approved location (e.g., commercial landfill) to avoid risk of spreading the disease to other plants • Disinfect gardening tools after pruning to prevent the spread of disease • See Pacific Northwest Plant Disease Management Handbook for information on disease recognition and for additional resources • Replant as necessary according to recommendations provided for "facility bottom area and upland slope vegetation".
Trees and shrubs		All pruning seasons (timing varies by species)	Pruning as needed	• Prune trees and shrubs in a manner appropriate for each species. Pruning should be performed by landscape professionals familiar with proper pruning techniques • All pruning of mature trees should be performed by or under the direct guidance of an ISA certified arborist
	A		Large trees and shrubs interfere with operation of the facility or access for maintenance	• Prune trees and shrubs using most current ANSI A300 standards and ISA BMPs. • Remove trees and shrubs, if necessary.
	Fall and Spring		Standing dead vegetation is present	• Remove standing dead vegetation • Replace dead vegetation within 30 days of reported dead and dying plants (as practical depending on weather/planting season) • If vegetation replacement is not feasible within 30 days, and absence of vegetation may result in erosion problems, temporary erosion control measures should be put in place immediately. • Determine cause of dead vegetation and address issue, if possible • If specific plants have a high mortality rate, assess the cause and replace with appropriate species. Consultation with a landscape architect is recommended.
	Fall and Spring		Planting beneath mature trees	• When working around and below mature trees, follow the most current ANSI A300 standards and ISA BMPs to the extent practicable (e.g., take care to minimize any damage to tree roots and avoid compaction of soil). • Planting of small shrubs or groundcovers beneath mature trees may be desirable in some cases; such plantings should use mainly plants that come as bulbs, bare root or in 4-inch pots; plants should be in no larger than 1-gallon containers.

[a] Frequency: A = Annually; B = Biannually (twice per year); M = Monthly; W = At least one visit should occur during the wet season (for debris/clog related maintenance, this inspection/maintenance visit should occur in the early fall, after deciduous trees have lost their leaves); S = Perform inspections after major storm events (24-hour storm event with a 10-year or greater recurrence interval).

IPM – Integrated Pest Management

ISA – International Society of Arboriculture

Table 3 (continued). Maintenance Standards and Procedures for Bioretention Facilities.				
Component	Recommended Frequency [a]		Condition when Maintenance is Needed (Standards)	Action Needed (Procedures)
	Inspection	Routine Maintenance		
Vegetation (cont'd)				
Trees and shrubs (cont'd)	Fall and Spring		Planting beneath mature trees	• When working around and below mature trees, follow the most current ANSI A300 standards and ISA BMPs to the extent practicable (e.g., take care to minimize any damage to tree roots and avoid compaction of soil). • Planting of small shrubs or groundcovers beneath mature trees may be desirable in some cases; such plantings should use mainly plants that come as bulbs, bare root or in 4-inch pots; plants should be in no larger than 1-gallon containers.
	Fall and Spring		Presence of or need for stakes and guys (tree growth, maturation, and support needs)	• Verify location of facility liners and underdrain (if any) prior to stake installation in order to prevent liner puncture or pipe damage • Monitor tree support systems: Repair and adjust as needed to provide support and prevent damage to tree. • Remove tree supports (stakes, guys, etc.) after one growing season or maximum of 1 year. • Backfill stake holes after removal.
Trees and shrubs adjacent to vehicle travel areas (or areas where visibility needs to be maintained)	A		Vegetation causes some visibility (line of sight) or driver safety issues	• Maintain appropriate height for sight clearance • When continued, regular pruning (more than one time/ growing season) is required to maintain visual sight lines for safety or clearance along a walk or drive, consider relocating the plant to a more appropriate location. • Remove or transplant if continual safety hazard • Consultation with a landscape architect is recommended for removal, transplant, or substitution of plants
Flowering plants		A	Dead or spent flowers present	Remove spent flowers (deadhead)
Perennials		Fall	Spent plants	Cut back dying or dead and fallen foliage and stems
Emergent vegetation		Spring	Vegetation compromises conveyance	• Hand rake sedges and rushes with a small rake or fingers to remove dead foliage before new growth emerges in spring or earlier only if the foliage is blocking water flow (sedges and rushes do not respond well to pruning)
Ornamental grasses (perennial)		Winter and Spring	Dead material from previous year's growing cycle or dead collapsed foliage	• Leave dry foliage for winter interest • Hand rake with a small rake or fingers to remove dead foliage back to within several inches from the soil before new growth emerges in spring or earlier if the foliage collapses and is blocking water flow
Ornamental grasses (evergreen)		Fall and Spring	Dead growth present in spring	• Hand rake with a small rake or fingers to remove dead growth before new growth emerges in spring • Clean, rake, and comb grasses when they become too tall • Cut back to ground or thin every 2-3 years as needed
Noxious weeds		M (March – October, preceding seed dispersal)	Listed noxious vegetation is present (refer to current county noxious weed list)	• By law, class A & B noxious weeds must be removed, bagged and disposed as garbage immediately • Reasonable attempts must be made to remove and dispose of class C noxious weeds • It is strongly encouraged that herbicides and pesticides not be used in order to protect water quality; use of herbicides and pesticides may be prohibited in some jurisdictions • Apply mulch after weed removal (see "Mulch")

[a] Frequency: A = Annually; B = Biannually (twice per year); M = Monthly; W = At least one visit should occur during the wet season (for debris/clog related maintenance, this inspection/maintenance visit should occur in the early fall, after deciduous trees have lost their leaves); S = Perform inspections after major storm events (24-hour storm event with a 10-year or greater recurrence interval).

IPM – Integrated Pest Management

ISA – International Society of Arboriculture

Table 3 (continued). Maintenance Standards and Procedures for Bioretention Facilities.

Component	Recommended Frequency [a]		Condition when Maintenance is Needed (Standards)	Action Needed (Procedures)
	Inspection	Routine Maintenance		
Vegetation (cont'd)				
Weeds		M (March – October, preceding seed dispersal)	Weeds are present	• Remove weeds with their roots manually with pincer-type weeding tools, flame weeders, or hot water weeders as appropriate • Follow IPM protocols for weed management (see "Additional Maintenance Resources" section for more information on IPM protocols)
Excessive vegetation		Once in early to mid- May and once in early- to mid-September	Low-lying vegetation growing beyond facility edge onto sidewalks, paths, or street edge poses pedestrian safety hazard or may clog adjacent permeable pavement surfaces due to associated leaf litter, mulch, and soil	• Edge or trim groundcovers and shrubs at facility edge • Avoid mechanical blade-type edger and do not use edger or trimmer within 2 feet of tree trunks • While some clippings can be left in the facility to replenish organic material in the soil, excessive leaf litter can cause surface soil clogging
	As needed		Excessive vegetation density inhibits stormwater flow beyond design ponding or becomes a hazard for pedestrian and vehicular circulation and safety	• Determine whether pruning or other routine maintenance is adequate to maintain proper plant density and aesthetics • Determine if planting type should be replaced to avoid ongoing maintenance issues (an aggressive grower under perfect growing conditions should be transplanted to a location where it will not impact flow) • Remove plants that are weak, broken or not true to form; replace in-kind • Thin grass or plants impacting facility function without leaving visual holes or bare soil areas • Consultation with a landscape architect is recommended for removal, transplant, or substitution of plants
	As needed		Vegetation blocking curb cuts, causing excessive sediment buildup and flow bypass	• Remove vegetation and sediment buildup
Mulch				
Mulch		Following weeding	Bare spots (without mulch cover) are present or mulch depth less than 2 inches	• Supplement mulch with hand tools to a depth of 2 to 3 inches • Replenish mulch per O&M manual. Often coarse compost is used in the bottom of the facility and arborist wood chips are used on side slopes and rim (above typical water levels) • Keep all mulch away from woody stems
Watering				
Irrigation system (if any)		Based on manufacturer's instructions	Irrigation system present	• Follow manufacturer's instructions for O&M
	A		Sprinklers or drip irrigation not directed/located to properly water plants	• Redirect sprinklers or move drip irrigation to desired areas

Summer watering (first year)		Once every 1-2 weeks or as needed during prolonged dry periods	Trees, shrubs and groundcovers in first year of establishment period	• 10 to 15 gallons per tree
				• 3 to 5 gallons per shrub
				• 2 gallons water per square foot for groundcover areas
				• Water deeply, but infrequently, so that the top 6 to 12 inches of the root zone is moist
				• Use soaker hoses or spot water with a shower type wand when irrigation system is not present
				  ○ Pulse water to enhance soil absorption, when feasible
				  ○ Pre-moisten soil to break surface tension of dry or hydrophobic soils/mulch, followed by several more passes. With this method , each pass increases soil absorption and allows more water to infiltrate prior to runoff
				• Add a tree bag or slow-release watering device (e.g., bucket with a perforated bottom) for watering newly installed trees when irrigation system is not present

[a] Frequency: A = Annually; B = Biannually (twice per year); M = Monthly; W = At least one visit should occur during the wet season (for debris/clog related maintenance, this inspection/maintenance visit should occur in the early fall, after deciduous trees have lost their leaves); S = Perform inspections after major storm events (24-hour storm event with a 10-year or greater recurrence interval).

IPM – Integrated Pest Management

ISA – International Society of Arboriculture

Table 3 (continued). Maintenance Standards and Procedures for Bioretention Facilities.				
Component	Recommended Frequency [a]		Condition when Maintenance is Needed (Standards)	Action Needed (Procedures)
	Inspection	Routine Maintenance		
Watering (cont'd)				

Summer watering (second and third years)		Once every 2-4 weeks or as needed during prolonged dry periods	Trees, shrubs and groundcovers in second or third year of establishment period	• 10 to 15 gallons per tree
				• 3 to 5 gallons per shrub
				• 2 gallons water per square foot for groundcover areas
				• Water deeply, but infrequently, so that the top 6 to 12 inches of the root zone is moist
				• Use soaker hoses or spot water with a shower type wand when irrigation system is not present
				  ○ Pulse water to enhance soil absorption, when feasible
				  ○ Pre-moisten soil to break surface tension of dry or hydrophobic soils/mulch, followed by several more passes. With this method , each pass increases soil absorption and allows more water to infiltrate prior to runoff

Summer watering (after establishment)		As needed	Established vegetation (after 3 years)	• Plants are typically selected to be drought tolerant and not require regular watering after establishment; however, trees may take up to 5 years of watering to become fully established • Identify trigger mechanisms for drought-stress (e.g., leaf wilt, leaf senescence, etc.) of different species and water immediately after initial signs of stress appear • Water during drought conditions or more often if necessary to maintain plant cover
Pest Control				
Mosquitoes	B, S		Standing water remains for more than 3 days after the end of a storm	• Identify the cause of the standing water and take appropriate actions to address the problem (see "Ponded water") • To facilitate maintenance, manually remove standing water and direct to the storm drainage system (if runoff is from non pollution-generating surfaces) or sanitary sewer system (if runoff is from pollution-generating surfaces) after getting approval from sanitary sewer authority. • Do not use pesticides or *Bacillus thuringiensis israelensis* (Bti)
Nuisance animals	As needed		Nuisance animals causing erosion, damaging plants, or depositing large volumes of feces	• Reduce site conditions that attract nuisance species where possible (e.g., plant shrubs and tall grasses to reduce open areas for geese, etc.) • Place predator decoys • Follow IPM protocols for specific nuisance animal issues (see "Additional Maintenance Resources" section for more information on IPM protocols) • Remove pet waste regularly • For public and right-of-way sites consider adding garbage cans with dog bags for picking up pet waste.
Insect pests	Every site visit associated with vegetation management		Signs of pests, such as wilting leaves, chewed leaves and bark, spotting or other indicators	• Reduce hiding places for pests by removing diseased and dead plants • For infestations, follow IPM protocols (see "Additional Maintenance Resources" section for more information on IPM protocols)

[a] Frequency: A = Annually; B = Biannually (twice per year); M = Monthly; W = At least one visit should occur during the wet season (for debris/clog related maintenance, this inspection/maintenance visit should occur in the early fall, after deciduous trees have lost their leaves); S = Perform inspections after major storm events (24-hour storm event with a 10-year or greater recurrence interval).

IPM – Integrated Pest Management

ISA – International Society of Arboriculture

Additional Maintenance Resources

Useful related guidance documents include the following:

- LID Technical Guidance Manual for Puget Sound: http://www.wastormwatercenter.org/files/library/lid-manual-2012-final-secure.pdf.
- Natural Lawn and Garden Care resources (King County and SPU 2008; Saving Water Partnership 2006, 2007, and 2012) include guidance on building healthy soil with compost and mulch, selecting appropriate plants, watering, using alternatives to pesticides, and implementing natural lawn care techniques.
- Integrated Pest Management (IPM) protocols (the term "pest" covers a broad range of species including harmful insects, plant pathogens, rodents, and weedy vegetation) provide an approach to pest control that uses regular monitoring to determine if and when treatments are needed, and employs physical, mechanical, cultural, and biological tactics to keep pest numbers low enough to prevent intolerable damage or annoyance (Ecology 2012c) while avoiding or minimizing the use of pesticides and fertilizers herbicides as a management strategy.
- See EPA's website for general information on IPM: www.epa.gov/pesticides/factsheets/ipm.htm
- See the City of Seattle's website for IPM Fact Sheets and Washington specific resources: www.seattle.gov/util/forbusinesses/landscapes/integrated_pest_management
- The International Society of Arboriculture (ISA) is a group that promotes the professional practice of arboriculture and fosters a greater worldwide awareness of the benefits of trees through research, technology, and education. ISA standards used for managing trees, shrubs, and other woody plants are the American National Standards Institute (ANSI) A300 standards. The ANSI A300 standards are voluntary industry consensus standards developed by the Tree Care Industry Association (TCIA) and written by the Accredited Standards Committee (ASC). The ANSI standards can be found on the ISA website: www.isa-arbor.com/education/publications/index.aspx.
- Volume IV (Source Control) of Ecology's 2012 SWMMWW provides guidance on herbicide and pesticide application and alternative management strategies for controlling weeds and pests.
- WSU Weeding Guidelines: http://gardening.wsu.edu
- Pacific Northwest Plant Disease Management Handbook for information on disease recognition and for additional resources: http://pnwhandbooks.org/plantdisease/diagnosis-and-testing/disease-diagnosis-and-control

These resources are supplemental and do not supersede guidance provided in the S*tandards and Procedures* tables.

Equipment and Materials

Table 4 includes recommendations for equipment and materials commonly used to maintain bioretention facilities. Some of the equipment and materials will be used for routine maintenance activities, while other equipment and materials will be necessary for specialized maintenance.

Table 4. Bioretention Equipment and Materials List.

Landscaping equipment	*Landscaping materials**
☐ Gloves	☐ Plants
☐ Weeding tool	☐ Stakes and ties
☐ Soil knife	*Erosion control material**
☐ Pruners	☐ Rock or cobbles for rock pad
☐ Loppers	☐ Erosion control matting
☐ Stakes and guys	*Mulch*
☐ Manual edger	☐ Arborist wood chip mulch
☐ Line trimmer (also known as a string trimmer, weed eater, or weed whacker)	☐ Coarse compost mulch
☐ Rototiller	☐ Rock mulch
☐ Hoe	*Pipe/structure inspection and maintenance equipment*
☐ Rake	☐ Hand tools
☐ Wheelbarrow	☐ Wrench or manhole lifter (for opening manhole lids, grates, etc.)
☐ Shovel	☐ Flashlight
☐ Push broom	☐ Mirror (for viewing pipes without entering structure)
☐ Hand tamper	☐ Garden hose
☐ Blade sharpeners	☐ Plumbing snake
☐ Tarp/ Buckets (to remove leaf litter/debris)	☐ Measuring tape or ruler
☐ Garbage bags (for disposal of trash/noxious weeds)	*Specialized equipment**
☐ Bark and mulch blower	☐ Mini excavator
☐ Boards to stand on during maintenance to prevent soil compaction (if maintenance is necessary during periods when Bioretention media is wet)	☐ Vactor truck
Watering equipment	☐ Manual seed broadcaster
☐ Soaker hose	☐ Soil monitoring equipment (T handle core sampler, soil auger, soil nutrient test kit)
☐ Hose/shower-type wand	☐ Flame weeder or hot water weeder
☐ Sprinklers	☐ Water jet or root saw (Vactor truck tools) for clearing roots from underdrains
☐ Tree watering bags	☐ Equipment for infiltration testing
☐ Buckets	*Bioretention soil**
☐ Keys for irrigation boxes	☐ Bioretention soil per design specifications
☐ Water source (e.g., watering truck), if necessary	

* Items not required for routine maintenance

Skills and Staffing

The skills required for maintenance of bioretention facilities are listed in the text box to the right. Additional specialized skills may also be required for corrective maintenance such as: horticulturalists, arborists, erosion control specialists, engineers, landscape architects, and soil scientists.

The staff effort required for maintenance varies. Table 5 provides some examples of staffing estimates from Washington jurisdictions, the City of Portland, a study conducted among Minnesota jurisdictions (Wilson et al. 2008), and the BMP and LID Whole Life Cost Models (WERF 2009). Annual staff hours are listed for an individual facility (i.e., a "typical" facility of undefined area), 1,000 square feet of facility, or 1,000 linear feet of facility.

Skills Needed for Maintenance of Bioretention Facilities

- Landscaping skills (e.g., general plant care)
- Plant identification skills (weeds vs. planted species, invasive vs. common weeds, how to dispose of invasive weeds, timing of weed seed dispersal)
- Erosion control knowledge
- General drainage system maintenance skills (e.g., inlet/pipe/underdrain cleaning experience, inlet/ pipe maintenance or repair experience)
- Operation of specialized equipment
- Engineer and/or landscape architect for major maintenance
- Certified arborist (or equivalently trained staff) for pruning of mature trees

Table 5. Maintenance Frequency and Staffing for Bioretention Facilities.

Routine Maintenance Activity	Frequency [a]	Annual Staff Hours	Source
General (no activity specified)	A or B	1 to 16 hours (per facility)	Maintenance of Stormwater BMPs: Frequency, Effort, and Cost (Wilson et al. 2008)
Vegetation management	A	0 to 2 hours (per facility)	BMP and LID Whole Life Cost Models (WERF 2009)
General (no activity specified)	M	24 hours (per 1,000 sf)	City of Bellevue
General (no activity specified)	M	16 hours (per facility)	Kitsap County
Weeding	M (May-Sept)	7 hours (per 1,000 lf)	Thurston County
Replanting and mulching	A		
Typical facility maintenance	Q	10 to 30 hours [b] (per 1,000 sf)	City of Portland
More complex site maintenance [c]	> Q	14 to 38 hours [b] (per 1,000 sf)	
General (no activity specified)	Unspecified	10 hours (per 1,000 sf)	City of Olympia

[a] Frequency: A = Annually; B = Biannually (twice per year); M = Monthly; Q = Quarterly (four times per year)
[b] Low end of range pertains to City staff and high end of range pertains to Contractor staff
[c] Deciduous canopy, poor soils, adjacent weed vectors, unmaintained commercial right-of-way
lf = linear feet
sf = square feet

Staffing estimates averaged approximately 16 to 22 hours per bioretention facility on an annual basis. The City of Portland estimated that bioretention facilities with more complex maintenance requirements could require up to 38 hours of staff time when using less seasoned maintenance crews.

Rain Gardens

Rain gardens are non-engineered, shallow, landscaped depressions with compost-amended soils and adapted plants. The depression temporarily stores stormwater runoff from adjacent areas. Some or all of the influent stormwater passes through the amended soil profile and into the underlying native soil. Stormwater that exceeds the storage capacity is designed to overflow to an adjacent drainage system.

Key Maintenance Considerations

The main components of rain gardens (and the associated maintenance considerations) are very similar to those listed for bioretention facilities. However, rain gardens do not require an engineered soil mix (native soils may be amended) and usually do not have underdrains or other control structures.

Fertilizer use should be avoided in rain gardens, particularly those located in watersheds draining to phosphorous limited water bodies.

Key Operations to Preserve Facility Function

As explained for bioretention facilities, rain gardens must be protected from foot traffic, vehicles and other loads, particularly during wet conditions, to prevent compaction of the amended soil and preserve infiltration capacity.

Signage can also be used to identify the vegetated area as a stormwater BMP and inform maintenance crews and the general public about protecting the rain garden's function (e.g., no walking in the garden).

Maintenance Standards and Procedures

Table 6 provides the recommended maintenance frequencies, standards, and procedures for rain garden components. For guidance on underdrains, check dams and other control structures, see "Bioretention Facilities".

Table 6. Maintenance Standards and Procedures for Rain Gardens.				
Component	Recommended Frequency [a]		Condition when Maintenance is Needed (Standards)	Action Needed (Procedures)
	Inspection	Routine Maintenance		
Rain Garden Footprint				
Earthen side slopes	B (during the wet season)		Persistent soil erosion on slopes	If erosion persists, water may be flowing into the garden too rapidly. In this case, the slope of the pipe or swale directing water to the garden, or the amount of water may need to be reduced (see "Erosion control at inlet")
Rockery sidewalls	A		Rockery side walls are insecure	Stabilize rockery sidewalls (may require consultation with engineer, particularly for walls 4 feet or greater in height)
Rain garden footprint		B	Trash and debris present	Clean out trash and debris
Rain garden bottom area	A		Visible sediment deposition in the rain garden that reduces drawdown time of water in the rain garden	• Remove sediment accumulation • If sediment is deposited from water entering the rain garden, determine the source and stabilize the area
		During/after fall leaf drop	Accumulated leaves in rain garden (may reduce infiltration capacity of rain garden or clog overflow)	Remove leaves
Ponded water	B, S		Excessive ponding water: Ponded water remains in the basin more than 3 days after the end of a storm	Confirm leaf, debris or sediment buildup in the bottom of the rain garden is not impeding infiltration. If necessary, remove leaf litter/debris/sediment. If this does not solve the problem, consultation with a professional with rain garden expertise is recommended to evaluate the following: • Check for other water inputs (e.g., groundwater, illicit connections) • Verify that the facility is sized appropriately for the contributing area. Confirm that the contributing area has not increased • Determine if the soil is clogged by sediment accumulation at the surface or if the soil has become overly compacted

[a] Frequency: A = Annually; B = Biannually (twice per year); S = Perform inspections after major storm events (24-hour storm event with a 10-year or greater recurrence interval).

Table 6 (continued). Maintenance Standards and Procedures for Rain Gardens.				
Component	Recommended Frequency [a]		Condition when Maintenance is Needed (Standards)	Action Needed (Procedures)
	Inspection	Routine Maintenance		
Inlets/Outlets/Pipes				
Splash block inlet	A		Water is not being directed properly to the rain garden and away from the building	Reconfigure/ repair blocks to direct water to the rain garden and away from building
Pipe inlet/ outlet	A		Pipe capacity is reduced by sediment or debris (can cause backups and flooding)	Clear pipes of sediment and debris
	A		Damaged/cracked drain pipes	• Repair/seal cracks • Replace when repair is insufficient
Erosion control at inlet	A		Rock or cobble is removed or missing and concentrated flows are contacting soil	Maintain a cover of rock or cobbles to protect the ground where concentrated water flows into the rain garden from a pipe or swale
Vegetation				
Vegetation		As needed	Dying, dead, or unhealthy plants	• Maintain a healthy cover of plants • Remove any diseased plants or plant parts and dispose of in commercial landfill to avoid risk of spreading the disease to other plants • Disinfect gardening tools after pruning to prevent the spread of disease • Re-stake trees if they need more support, but plan to remove stakes and ties after the first year • Cars can damage roots – protect root areas of trees and plants from vehicle traffic
		As needed	Vegetation inhibits sight distances and sidewalks	Keep sidewalks and sight distances on roadways clear
		As needed	Broken, dead, or sucker vegetation is present	Remove broken or dead branches and suckers
		As needed	Vegetation is crowding inlets and outlets	Keep water inlets and outlets in the rain garden clear of vegetation

[a] Frequency: A = Annually; B = Biannually (twice per year); S = Perform inspections after major storm events (24-hour storm event with a 10-year or greater recurrence interval).

Table 6 (continued). Maintenance Standards and Procedures for Rain Gardens.				
Component	Recommended Frequency [a]		Condition when Maintenance is Needed (Standards)	Action Needed (Procedures)
	Inspection	Routine Maintenance		
Vegetation (cont'd)				
Vegetation (cont'd)		As needed	Broken, dead, or sucker vegetation is present	Remove broken or dead branches and suckers
		As needed	Vegetation is crowding inlets and outlets	Keep water inlets and outlets in the rain garden clear of vegetation
	One time March through June		• Yellowing: possible Nitrogen (N) deficiency • Poor growth: possible Phosphorous (P) deficiency • Poor flowering, spotting or curled leaves, or weak roots or stems: possible Potassium (K) deficiency	• Test soil to identify specific nutrient deficiencies • Consult with a professional knowledgeable in the area of natural amendments or refer to Natural Lawn and Garden Care resources and avoid synthetic fertilizers • Consider selecting different plants for soil conditions
Weeds		As needed, preceding seed dispersal	Problem weeds are present	• Remove weeds by hand, especially in spring when the soil is moist and the weeds are small • Dig or pull weeds out by the roots before they go to seed • Apply mulch after weeding (see "Mulch")
Mulch				
Mulch		Following weeding	Bare spots (without mulch cover) are present or mulch depth less than 2 inches	• Supplement mulch with hand tools to a depth of 2 to 3 inches • Use coarse compost in the bottom of the rain garden and arborist wood chips on side slopes and rim (above typical water levels) • Keep all mulch from being in contact with woody stems.

[a] Frequency: A = Annually; B = Biannually (twice per year); S = Perform inspections after major storm events (24-hour storm event with a 10-year or greater recurrence interval).

Table 6 (continued). Maintenance Standards and Procedures for Rain Gardens.				
Component	Recommended Frequency [a]		Condition when Maintenance is Needed (Standards)	Action Needed (Procedures)
	Inspection	Routine Maintenance		
Watering				
Summer watering (first year)		Once every 1-2 weeks or as needed during prolonged dry periods	Tree, shrubs and groundcovers in first year of establishment period	• 10 to 15 gallons per tree • 3 to 5 gallons per shrub • 2 gallons water per square foot for groundcover areas • Water deeply, but infrequently, so that the top 6 to 12 inches of the root zone is moist • Use soaker hoses or spot water with a shower type wand when irrigation system is not present • Add a tree bag or slow-release watering device (e.g., bucket with a perforated bottom) for watering newly installed trees when irrigation system is not present
Summer watering (second and third years)		Once every 2-4 weeks or as needed during prolonged dry periods	Tree, shrubs and groundcovers in second or third year of establishment period	• 10 to 15 gallons per tree • 3 to 5 gallons per shrub • 2 gallons water per square foot for groundcover areas • Water deeply, but infrequently, so that the top 6 to 12 inches of the root zone is moist • Use soaker hoses or spot water with a shower type wand when irrigation system is not present
Summer watering (after establishment)		As needed	Established vegetation (after 3 years)	• Water during drought conditions or more often if necessary to maintain plant cover • Identify trigger mechanisms for drought-stress (e.g., leaf wilt, leaf senescence, etc.) of different rain garden species and water immediately after initial signs of stress appear

[a] Frequency: A = Annually; B = Biannually (twice per year); S = Perform inspections after major storm events (24-hour storm event with a 10-year or greater recurrence interval).

Table 6 (continued). Maintenance Standards and Procedures for Rain Gardens.				
Component	Recommended Frequency [a]		Condition when Maintenance is Needed (Standards)	Action Needed (Procedures)
	Inspection	Routine Maintenance		
Pest Control				
Mosquitoes	B, S		Standing water remains for more than 3 days after the end of a storm	• Identify the cause of the standing water and take appropriate actions to address the problem (see "Ponded water") • Do not use pesticides or *Bacillus thuringiensis israelensis* (Bti)

[a] Frequency: A = Annually; B = Biannually (twice per year); S = Perform inspections after major storm events (24-hour storm event with a 10-year or greater recurrence interval).

Additional Maintenance Resources

In addition to the resources listed for bioretention, useful guidance for rain gardens can be found in the Rain Garden Handbook for Western Washington Homeowners (http://www.wastormwatercenter.org/low-impact/). These resources are supplemental and do not supersede guidance provided in the Standards and Procedures tables.

Equipment and Materials

Table 7 includes recommendations for equipment and materials commonly used to maintain rain gardens. Some of the equipment and materials will be used for routine maintenance activities, while other equipment and materials will be necessary for specialized maintenance.

Table 7. Rain Garden Equipment and Materials List.

Landscaping equipment	*Watering equipment*
☐ Gloves	☐ Soaker hose
☐ Weeding tool	☐ Hose/shower-type wand
☐ Soil knife	☐ Sprinklers
☐ Pruners	☐ Tree watering bags
☐ Loppers	☐ Buckets
☐ Stakes and guys	*Mulch*
☐ Manual edger	☐ Arborist wood chip mulch
☐ Line trimmer (also known as a string trimmer, weed eater, or weed whacker)	☐ Coarse compost mulch
☐ Rototiller	☐ Rock mulch
☐ Hoe	*Landscaping materials**
☐ Rake	☐ Plants
☐ Wheelbarrow	*Erosion control materials**
☐ Shovel	☐ Rock or cobbles for rock pad
☐ Push broom	☐ Erosion control matting
☐ Hand tamper	*Soil**
☐ Blade sharpeners	☐ Compost (for soil amendment)
☐ Tarp/Buckets (to remove leaf litter/debris)	☐ Bioretention soil mix
☐ Garbage bags (for disposal of trash/noxious weeds)	

* Items not required for routine maintenance

Permeable Pavement

Permeable pavement is a paving system which allows rainfall to percolate through the surface into the underlying soil or an aggregate bed, where stormwater is stored and infiltrated to underlying subgrade, or removed by an overflow drainage system. Permeable pavement facilities are considered Stormwater Treatment and Flow Control BMPs and can be used to meet Minimum Requirements #6 (treatment), #7 (flow control), or both. To satisfy Minimum Requirement #6, stormwater must be infiltrated into underlying soils that meet Ecology's soil treatment requirements or filtered through an engineered treatment layer included in the pavement section.

Key Maintenance Considerations

The main components of permeable pavement facilities are listed below with descriptions of their function and key maintenance considerations.

- **Wearing course**: The surface layer of any permeable pavement system is the wearing course. Categories of wearing courses include:
    - Porous asphalt**:** A flexible pavement similar to standard asphalt that uses a bituminous binder to adhere aggregate. However, the fine material (sand and finer) is reduced or eliminated, resulting in the formation of voids between the aggregate in the pavement surface that allows water to infiltrate to the underlying aggregate base.
    - Pervious concrete**:** A rigid pavement similar to conventional concrete that uses a cementitious material to bind aggregate together. However, the fine aggregate (sand) component is reduced or eliminated in the gradation, resulting in the formation of voids between the aggregate in the pavement surface that allows water to infiltrate to the underlying aggregate base.
    - Interlocking concrete paver blocks: Solid, precast, manufactured modular units. Pavements constructed with these units create joints that are filled with permeable aggregate and installed on an open-graded aggregate base.
    - Aggregate Pavers (or Pervious Pavers): Modular precast paving units made with uniformly sized aggregates and bound with Portland cement concrete using a high strength adhesive. Unlike concrete paver blocks, these pavers are permeable. Pavements constructed with these units create joints that are filled with permeable aggregate and installed on an open-graded aggregate base.
    - Open-celled paving grid with gravel**:** Concrete or plastic grids that are filled with permeable aggregate. The system can be installed on an open-graded aggregate base.
    - Open-celled paving grid with grass**:** Concrete or plastic grids that are filled with a mix of sand, gravel, and topsoil for planting vegetation. The cells can be planted with a variety of non-turf forming grasses or low-growing groundcovers. The system can be installed on an open-graded aggregate base.

A critical component of a successful maintenance program is regular removal of sediment and debris, excessive moss from the facility surface to prevent clogging of the permeable wearing course.

- **Inlet (optional):** While permeable pavement facilities often manage only the rain falling directly on the pavement surface, they may also be designed to accept stormwater runoff from additional areas (e.g., adjacent impervious areas, nearby rooftops). Runoff can be directed to the facility by two main methods:
  - Sheet flow to the surface: Surface areas of the facility receiving runoff contributions will likely be prone to clogging due to sediment inputs, particularly in areas of concentrated inflow. These areas should be carefully inspected and corrective maintenance should be performed as necessary to maintain the function of the pavement at these sites. In addition, the source of the sediment loads should be evaluated to determine if modifications to features in the drainage area landscape (e.g., stabilization of adjacent planted areas) would help to prevent clogging.
  - Piped flow into the aggregate base: Pipes dispersing water into the aggregate bed should be designed with cleanout access to allow pipe maintenance. Runoff that is piped into the aggregate base should be pretreated for sediment removal (e.g., screens, sumps) to protect the subbase from sedimentation and clogging. The pretreatment system must be maintained to remove accumulated sediment.
- **Aggregate Base / Storage Reservoir:** Stormwater passes through the wearing course to an underlying aggregate storage reservoir where it is stored prior to infiltration into the underlying soil. This aggregate bed also provides the structural function of supporting design loads (e.g., vehicle loading) for flexible pavement systems. To allow inspection of the aggregate course, some facilities have an observation port (typically installed during construction) that allows monitoring of the water levels in the aggregate bed to determine if the facility is draining properly.
- **Overflow:** Unless designed to provide full infiltration of stormwater, permeable pavement facilities have an overflow. Facility overflow can be provided by subsurface slotted drain pipe(s) (elevated in the aggregate bed) routed to an inlet or catch basin structure or by lateral flow through the storage reservoir to a daylighted drainage system.
- **Underdrain with flow restrictor (optional):** A slotted drain pipe with flow restrictor assembly may be installed at the bottom of or elevated within the aggregate storage reservoir. Permeable pavement facilities with underdrains and flow restrictors operate as underground detention systems with some infiltration.

Key Operations to Preserve Facility Function

There are several permeable pavement operational actions that can limit the likelihood of corrective maintenance actions or replacement including the following:

- Prohibiting use of sealant on porous asphalt
- Protecting from construction site runoff with proper temporary erosion and sediment controls and flow diversion measures
- Modifying utility cut procedures for permeable pavements. Protocols should *recommend* restoring permeable pavement section in-kind, where feasible, and *require* restoring permeable pavement section in-kind where replacement with conventional pavement would impact overall facility function. Replacing permeable pavement with conventional pavement is acceptable if it is a small percentage of the total facility area and does not impact the overall facility function.
- Modifying snow removal procedures such as:
    - Using a snow plow with skids or rollers to slightly raise the blade above permeable pavers or open-celled paving grid systems to prevent loss of top course aggregate and damage to paver blocks or grids
    - Avoiding stockpiling plowed snow (i.e., dirty snow) directly on top of permeable pavement
    - Avoiding application of sand to pervious pavement and adjacent streets where vehicles may track it onto the pervious pavement. If sand is applied, on an emergency basis during snowy conditions, vacuum sweep surface as soon as possible after the sand is no longer needed.
    - Use alternative deicers in moderation (e.g., salt, molasses-based and chemical deicers).
- Protecting the surface from stockpiles of landscaping materials (e.g., mulch, soil, compost) being used for adjacent pervious areas
- Stabilizing adjacent landscaped areas to avoid eroding soil and clogging surfaces or sloping adjacent landscaped areas away from permeable pavement , if possible

Signage or pavement marking can also be used to identify permeable pavement as a stormwater BMP and inform maintenance crews and the general public about protecting the facility's function (e.g., no stockpiling of soils or mulch on pavement surface).

Maintenance Standards and Procedures

Table 8 provides the recommended maintenance frequencies, standards, and procedures for permeable pavement components. The level of routine maintenance required and the frequency of corrective maintenance actions may increase for facilities receiving high sediment loads (e.g., sanding) or facilities subject to extended wet, shady conditions where moss may accumulate.

Table 8. Maintenance Standards and Procedures for Permeable Pavement.

Component	Recommended Frequency [a]		Condition when Maintenance is Needed (Standards)	Action Needed (Procedures)
	Inspection	Routine Maintenance		
Surface/Wearing Course				
Permeable Pavements, all	A, S		Runoff from adjacent pervious areas deposits soil, mulch or sediment on paving	• Clean deposited soil or other materials from permeable pavement or other adjacent surfacing • Check if surface elevation of planted area is too high, or slopes towards pavement, and can be regraded (prior to regrading, protect permeable pavement by covering with temporary plastic and secure covering in place) • Mulch and/or plant all exposed soils that may erode to pavement surface
Porous asphalt or pervious concrete		A or B	None (routine maintenance)	Clean surface debris from pavement surface using one or a combination of the following methods: • Remove sediment, debris, trash, vegetation, and other debris deposited onto pavement (rakes and leaf blowers can be used for removing leaves) • Vacuum/sweep permeable paving installation using: ○ Walk-behind vacuum (sidewalks) ○ High efficiency regenerative air or vacuum sweeper (roadways, parking lots) ○ ShopVac or brush brooms (small areas) • Hand held pressure washer or power washer with rotating brushes Follow equipment manufacturer guidelines for when equipment is most effective for cleaning permeable pavement. Dry weather is more effective for some equipment.
	A[b]		Surface is clogged: Ponding on surface or water flows off the permeable pavement surface during a rain event (does not infiltrate)	• Review the overall performance of the facility (note that small clogged areas may not reduce overall performance of facility) • Test the surface infiltration rate using ASTM C1701 as a corrective maintenance indicator. Perform one test per installation, up to 2,500 square feet. Perform an additional test for each additional 2,500 square feet up to 15,000 square feet total. Above 15,000 square feet, add one test for every 10,000 square feet. • If the results indicate an infiltration rate of 10 inches per hour or less, then perform corrective maintenance to restore permeability. To clean clogged pavement surfaces, use one or combination of the following methods: • Combined pressure wash and vacuum system calibrated to not dislodge wearing course aggregate. • Hand held pressure washer or power washer with rotating brushes • Pure vacuum sweepers Note: If the annual/biannual routine maintenance standard to clean the pavement surface is conducted using equipment from the list above, corrective maintenance may not be needed.
	A		Sediment present at the surface of the pavement	• Assess the overall performance of the pavement system during a rain event. If water runs off the pavement and/or there is ponding then see above. • Determine source of sediment loading and evaluate whether or not the source can be reduced/eliminated. If the source cannot be addressed, consider increasing frequency of routine cleaning (e.g., twice per year instead of once per year).
	Summer		Moss growth inhibits infiltration or poses slip safety hazard	• Sidewalks: Use a stiff broom to remove moss in the summer when it is dry • Parking lots and roadways: Pressure wash, vacuum sweep, or use a combination of the two for cleaning moss from pavement surface. May require stiff broom or power brush in areas of heavy moss.
	A		Major cracks or trip hazards and concrete spalling and raveling	• Fill potholes or small cracks with patching mixes • Large cracks and settlement may require cutting and replacing the pavement section. Replace in-kind where feasible. Replacing porous asphalt with conventional asphalt is acceptable if it is a small percentage of the total facility area and does not impact the overall facility function. • Take appropriate precautions during pavement repair and replacement efforts to prevent clogging of adjacent porous materials

[a] Frequency: A= Annually; B= Biannually (twice per year); S = Perform inspections after major storm events (24-hour storm event with a 10-year or greater recurrence interval).
[b] Inspection should occur during storm event.

Table 8 (continued). Maintenance Standards and Procedures for Permeable Pavement.				
Component	Recommended Frequency [a]		Condition when Maintenance is Needed (Standards)	Action Needed (Procedures)
	Inspection	Routine Maintenance		
Surface/Wearing Course (cont'd)				
Interlocking concrete paver blocks and aggregate pavers		A or B	None (routine maintenance)	Clean pavement surface using one or a combination of the following methods: • Remove sediment, debris, trash, vegetation, and other debris deposited onto pavement (rakes and leaf blowers can be used for removing leaves) • Vacuum/sweep permeable paving installation using: ○ Walk-behind vacuum (sidewalks) ○ High efficiency regenerative air or vacuum sweeper (roadways, parking lots) ○ ShopVac or brush brooms (small areas) • Note: Vacuum settings may have to be adjusted to prevent excess uptake of aggregate from paver openings or joints. Vacuum surface openings in dry weather to remove dry, encrusted sediment.
	A [b]		Surface is clogged: Ponding on surface or water flows off the permeable pavement surface during a rain event (does not infiltrate)]	• Review the overall performance of the facility (note that small clogged areas may not reduce overall performance of facility) • Test the surface infiltration rate using ASTM C1701 as a corrective maintenance indicator. Perform one test per installation, up to 2,500 square feet. Perform an additional test for each additional 2,500 square feet up to 15,000 square feet total. Above 15,000 square feet, add one test for every 10,000 square feet. • If the results indicate an infiltration rate of 10 inches per hour or less, then perform corrective maintenance to restore permeability. • Clogging is usually an issue in the upper 2 to 3 centimeters of aggregate. Remove the upper layer of encrusted sediment, and fines, and/or vegetation from openings and joints between the pavers by mechanical means and/or suction equipment (e.g., pure vacuum sweeper). • Replace aggregate in paver cells, joints, or openings per manufacturer's recommendations
	A		Sediment present at the surface of the pavement	• Assess the overall performance of the pavement system during a rain event. If water runs off the pavement and/or there is ponding, then see above. • Determine source of sediment loading and evaluate whether or not the source can be reduced/eliminated. If the source cannot be addressed, consider increasing frequency of routine cleaning (e.g., twice per year instead of once per year).
	Summer		Moss growth inhibits infiltration or poses slip safety hazard	• Sidewalks: Use a stiff broom to remove moss in the summer when it is dry • Parking lots and roadways: Vacuum sweep or stiff broom/power brush for cleaning moss from pavement surface
	A		Paver block missing or damaged	Remove individual damaged paver blocks by hand and replace or repair per manufacturer's recommendations
	A		Loss of aggregate material between paver blocks	Refill per manufacturer's recommendations for interlocking paver sections
	A		Settlement of surface	May require resetting
Open-celled paving grid with gravel		A or B	None (routine maintenance)	• Remove sediment, debris, trash, vegetation, and other debris deposited onto pavement (rakes and leaf blowers can be used for removing leaves) • Follow equipment manufacturer guidelines for cleaning surface.
	A [b]		Aggregate is clogged: Ponding on surface or water flows off the permeable pavement surface during a rain event (does not infiltrate)]	• Use vacuum truck to remove and replace top course aggregate • Replace aggregate in paving grid per manufacturer's recommendations
	A		Paving grid missing or damaged	• Remove pins, pry up grid segments, and replace gravel • Replace grid segments where three or more adjacent rings are broken or damaged • Follow manufacturer guidelines for repairing surface.
	A		Settlement of surface	May require resetting
	A		Loss of aggregate material in paving grid	Replenish aggregate material by spreading gravel with a rake (gravel level should be maintained at the same level as the plastic rings or no more than 1/4 inch above the top of rings). See manufacturer's recommendations.
		A	Weeds present	• Manually remove weeds • Presence of weeds may indicate that too many fines are present (refer to Actions Needed under "Aggregate is clogged" to address this issue)

[a] Frequency: A= Annually; B= Biannually (twice per year); S = Perform inspections after major storm events (24-hour storm event with a 10-year or greater recurrence interval).
[b] Inspection should occur during storm event.

Table 8 (continued). Maintenance Standards and Procedures for Permeable Pavement.

Component	Recommended Frequency [a]		Condition when Maintenance is Needed (Standards)	Action Needed (Procedures)
	Inspection	Routine Maintenance		
Surface/Wearing Course (cont'd)				
Open-celled paving grid with grass		A or B	None (routine maintenance)	• Remove sediment, debris, trash, vegetation, and other debris deposited onto pavement (rakes and leaf blowers can be used for removing leaves) • Follow equipment manufacturer guidelines for cleaning surface.
	A [b]		Aggregate is clogged: Ponding on surface or water flows off the permeable pavement surface during a rain event (does not infiltrate)]	• Rehabilitate per manufacturer's recommendations.
	A		Paving grid missing or damaged	• Remove pins, pry up grid segments, and replace grass • Replace grid segments where three or more adjacent rings are broken or damaged • Follow manufacturer guidelines for repairing surface.
	A		Settlement of surface	• May require resetting
	A		Poor grass coverage in paving grid	• Restore growing medium, reseed or plant, aerate, and/or amend vegetated area as needed • Traffic loading may be inhibiting grass growth; reconsider traffic loading if feasible
		As needed	None (routine maintenance)	• Use a mulch mower to mow grass
		A	None (routine maintenance)	• Sprinkle a thin layer of compost on top of grass surface (1/2" top dressing) and sweep it in • Do not use fertilizer
		A	Weeds present	• Manually remove weeds • Mow, torch, or inoculate and replace with preferred vegetation
Inlets/Outlets/Pipes				
Inlet/outlet pipe	A		Pipe is damaged	Repair/replace
	A		Pipe is clogged	Remove roots or debris
Underdrain pipe	Clean pipe as needed	Clean orifice at least biannually (may need more frequent cleaning during wet season)	Plant roots, sediment or debris reducing capacity of underdrain (may cause prolonged drawdown period)	• Jet clean or rotary cut debris/roots from underdrain(s) • If underdrains are equipped with a flow restrictor (e.g., orifice) to attenuate flows, the orifice must be cleaned regularly
Raised subsurface overflow pipe	Clean pipe as needed	Clean orifice at least biannually (may need more frequent cleaning during wet season)	Plant roots, sediment or debris reducing capacity of underdrain	• Jet clean or rotary cut debris/roots from under-drain(s) • If underdrains are equipped with a flow restrictor (e.g., orifice) to attenuate flows, the orifice must be cleaned regularly
Outlet structure	A, S		Sediment, vegetation, or debris reducing capacity of outlet structure	• Clear the blockage • Identify the source of the blockage and take actions to prevent future blockages

[a] Frequency: A= Annually; B= Biannually (twice per year); S = Perform inspections after major storm events (24-hour storm event with a 10-year or greater recurrence interval).
[b] Inspection should occur during storm event.

Table 8 (continued). Maintenance Standards and Procedures for Permeable Pavement.				
Component	Recommended Frequency [a]		Condition when Maintenance is Needed (Standards)	Action Needed (Procedures)
	Inspection	Routine Maintenance		
Inlets/Outlets/Pipes (cont'd)				
Overflow	B		Native soil is exposed or other signs of erosion damage are present at discharge point	Repair erosion and stabilize surface
Aggregate Storage Reservoir				
Observation port	A, S		Water remains in the storage aggregate longer than anticipated by design after the end of a storm	If immediate cause of extended ponding is not identified, schedule investigation of subsurface materials or other potential causes of system failure.
Vegetation				
Adjacent large shrubs or trees		As needed	Vegetation related fallout clogs or will potentially clog voids	• Sweep leaf litter and sediment to prevent surface clogging and ponding • Prevent large root systems from damaging subsurface structural components
		Once in May and Once in September	Vegetation growing beyond facility edge onto sidewalks, paths, and street edge	Edging and trimming of planted areas to control groundcovers and shrubs from overreaching the sidewalks, paths and street edge improves appearance and reduces clogging of permeable pavements by leaf litter, mulch and soil.
Leaves, needles, and organic debris		In fall (October to December) after leaf drop (1-3 times, depending on canopy cover)	Accumulation of organic debris and leaf litter	Use leaf blower or vacuum to blow or remove leaves, evergreen needles, and debris (i.e., flowers, blossoms) off of and away from permeable pavement

[a] Frequency: A= Annually; B= Biannually (twice per year); S = Perform inspections after major storm events (24-hour storm event with a 10-year or greater recurrence interval).
[b] Inspection should occur during storm event.

Equipment and Materials

Table 9 includes recommendations for equipment and materials commonly used to maintain permeable pavement. Some of the equipment and materials will be used for routine maintenance activities, while other equipment and materials will be necessary for specialized maintenance.

Table 9. Permeable Pavement Equipment and Materials List.

Equipment to address clogging of wearing course, such as:	*Weed / vegetation removal equipment, such as:*
☐ Hand held pressure washer or power washer with rotating brushes (not recommended for open-celled aggregate-filled systems) ☐ Walk-behind vacuum (sidewalks) ☐ Pure vacuum sweeper ☐ ShopVac (small areas) ☐ Combined higher pressure wash and vacuum system	☐ Weeding tools ☐ Weed burner ☐ Edging and trimming equipment to control groundcover and other vegetation from extending onto pavement surface
Equipment to remove sediment, debris, and leaf litter, such as:	*Additional equipment for grass-filled open-celled grid systems*
☐ High efficiency regenerative air or vacuum sweeper (roadways, parking lots) ☐ Push broom (can also be used to spread and clean aggregate in gravel-filled open-celled grid and permeable paver systems) ☐ Brush broom (course bristled broom) to remove moss ☐ Leaf blower	☐ Mower or mulch mower ☐ Topdress grass seed ☐ Compost ☐ Replacement grid segments
*Erosion control equipment (to stabilize adjacent landscaped areas and protect pavement from sediment inputs)**	*Additional equipment for gravel-filled open-celled grid systems*
☐ Erosion control matting ☐ Rocks ☐ Mulch ☐ Plants ☐ Landscaping tools ☐ Tarps (to protect pavement in area of landscaping from clogging, e.g., mulch stockpiles)	☐ Rakes and shovels ☐ Aggregate to replace material after vacuuming or to replenish material in high use areas ☐ Replacement grid segments ☐ Wheelbarrow (for transporting replacement aggregate)
Pipe/structure inspection and maintenance equipment	*Additional equipment for permeable paver systems*
☐ Hand tools ☐ Wrench or manhole opener (for opening manhole lids, grates, etc.) ☐ Flashlight ☐ Mirror (for viewing pipes without entering structure) ☐ Garden hose ☐ Plumbing snake ☐ Measuring tape or ruler	☐ Rakes and shovels ☐ Extra pavers and bedding material ☐ Aggregate to replace materials between pavers after vacuuming ☐ Wheelbarrow (for transporting replacement aggregate)
	Snow removal equipment, such as:
	☐ Plow with skids to prevent damage to permeable pavement ☐ Snow blower

* Items not required for routine maintenance

Skills and Staffing

The skills required for the maintenance of permeable pavement facilities are listed in the text box to the right.

Skills Needed for Maintenance of Permeable Pavement

- Sweeper and equipment operation
- Commercial driver's license (CDL)
- Landscaping skills (e.g., general plant care) for grass-filled open-celled grid systems
- Engineer and/or landscape architect for major maintenance

The staff effort required for maintenance varies based on the type of facility, sediment loading, and site conditions. Table 10 provides some examples of staffing estimates from Washington jurisdictions, Washington contractors/vendors, a study conducted among Minnesota jurisdictions (Wilson et al. 2008), and the BMP and LID Whole Life Cost Models (WERF 2009). Staff estimates are listed as the number of hours to maintain an individual facility (i.e., a "typical" facility of undefined area) per year or as the area of facility maintained per hour of staff time. Staffing estimates ranged from 1 to 24 hours per facility on an annual basis, with an average of approximately 4 to 6 hours per permeable pavement facility on an annual basis. Cleaning estimates in sf/hr ranged from 1,000 to 87,000 sf/hr depending on the type of maintenance activity.

Table 10. Maintenance Frequency and Staffing for Permeable Pavement.				
Type of Pavement	**Routine Maintenance Activity**	**Frequency [a]**	**Annual Staff Hours**	**Source**
Permeable Pavement (all)	NG	A or B	1 to 4 hours (per facility)	Maintenance of Stormwater BMPs: Frequency, Effort, and Cost (Wilson et al. 2008)
Permeable Pavement (all)	Permeable Pavement Sweeping; Litter and Minor Debris Removal; and Recordkeeping	A	4 to 6 hours (per facility)	BMP and LID Whole Life Cost Models (WERF 2009)
Permeable Pavement (all)	Cleaning	A	4,000 sf/hour	City of Olympia
Permeable Pavement (all)	NG	B	4 hours (per facility)	Kitsap County
Permeable Pavement (all)	NG	3 times/year	24 hours (per facility)	Pierce County
Pervious Concrete	Parking lot (dry)	Q	6,000-9,000 sf/hr	Backstrom Curb & Sidewalk
	Sidewalk (dry)	B	1,000 sf/hr	
GrassPave2	Mowing	Weekly to M	22,000-33,000 sf/hr	Northwest Linings & Geotextile
	Fertilizing and liming		65,000-87,000 sf/hr	
GravelPave2	Gravel raking / re-distribution		11,000-22,000 sf/hr	
	Weed control		65,000-87,000 sf/hr	

[a] Frequency: A = Annually; B = Biannually (twice per year); M = Monthly; Q = Quarterly (four times per year); NG = no guidance provided

sf/hr = square feet per hour

Vegetated Roofs

Vegetated roofs (also known as ecoroofs and green roofs) are thin layers of engineered soil and vegetation constructed on top of a conventional roof. Vegetated roofs consist of four basic components: a waterproof membrane, drainage layer, lightweight growth medium, and vegetation. Deeper installations, referred to as "intensive" roofs, are comprised of at least 6 inches of growth media and are planted with groundcovers, grasses, shrubs and sometimes trees. These intensive systems require regular landscape maintenance. Shallower installations, referred to as "extensive" roofs, are comprised of less than 6 inches of growth media and use a planting palette of drought-tolerant, low maintenance groundcovers. The procedures outlined below focus on extensive roof systems, and different procedures for intensive roofs are noted.

Key Maintenance Considerations

The main components of vegetated roof facilities are listed below with descriptions of their function and key maintenance considerations. Components are listed in the order of installation from the roof deck upwards.

- **Waterproof membrane**: Waterproof membranes are installed on the roof deck below the vegetated roof system. Systems also include a protection layer and root barrier to preserve the integrity of the waterproof membrane. These components are not visible, so inspection is typically not possible unless a leak detection system is installed. During maintenance, sharp tools, lawn staples, and stakes should be avoided to prevent damage to membrane.

- **Drainage layer**: All vegetated roofs have a drainage component that routes excess water to the roof drain system. Usually this takes the form of a manufactured drain mat or granular drainage media. A separation layer (e.g., filter fabric) is typically installed above the drainage mat or granular drainage media to prevent fine components of the growth media from being washed into the roof drain system. This component is also not visible, so inspection is difficult. During maintenance, sharp tools, lawn staples, and stakes should be avoided to prevent damage to the drainage layer.

- **Growth media**: Vegetated roofs use a light-weight growth medium with adequate fertility and drainage capacity to support plant growth and allow infiltration and storage of water. In general the media is composed of porous and lightweight mineral aggregates such as pumice, lave rock, expanded shale and expanded slate. The growth media may be covered by a mat (or other erosion control measure) to prevent surface erosion due to rain and wind scour before plants are established.

- **Vegetation**: The plants on vegetated roofs are typically succulents, grass, herbs, and/or wildflowers adapted to the harsh conditions (minimal soils, seasonal drought, high winds, and strong sun exposure) prevalent on rooftops. A wider variety of vegetation types may be used on intensive roofs, but these typically require additional maintenance. Regular maintenance activities associated with vegetation include

weeding and pruning. Plants also require watering during establishment and extended dry periods.

- **Structural drainage elements**: The roof drainage system routes water from the vegetated roof drainage layer to a nearby drainage system. It is important to maintain unobstructed outlet pipes and structures to ensure that stormwater is safely conveyed from the roof to a discharge point. There are also other structural components of a roof that may interface with the vegetated roof (e.g., flashing, roof ventilation points, utilities).
- **Border zone:** This zone forms an area, composed of gravel and devoid of vegetation, around the perimeter of the vegetated roof, typically used as a fire prevention method and to prevent water damage.
- **Gravel stops:** These are sheet metal edges, typically installed outside of the border zone, along the perimeter of the roof to prevent growth medium from blowing or washing off of the roof.

Key Operations to Preserve Facility Function

For vegetated roofs to function properly, stormwater must filter through several layers. Similar to bioretention facilities, filtration can be reduced if the growth media is subject to compaction (e.g., foot traffic). To limit the likelihood of corrective maintenance (e.g., growth media), the planted area of the vegetated roof should be protected from external loads. The risk of compaction is higher when soils are saturated, therefore any type of loading in the planted areas of the vegetated roof (including foot traffic) should be avoided or minimized during wet conditions.

Signage is recommended to identify the planted areas of the vegetated roof as a stormwater BMP and educate maintenance crews and the general public about protecting the facility's function (e.g., no walking on the facility). Clear walkways or pathways should be present to discourage foot traffic on the planted portions of the vegetated roof.

Maintenance Standards and Procedures

Table 11 provides the recommended maintenance frequencies, standards, and procedures for vegetated roof components.

Each vegetated roof installation will have specific O&M guidelines provided by the manufacturer and installer. The following guidelines provide a general set of standards for prolonged vegetated roof performance. Note that some maintenance recommendations are different for extensive versus intensive vegetated roof systems. The procedures outlined below focus on extensive roof systems, and different procedures for intensive roofs are noted.

Table 11. Maintenance Standards and Procedures for Vegetated Roofs.				
Component	Recommended Frequency [a]		Condition when Maintenance is Needed (Standards)	Action Needed (Procedures)
	Inspection	Routine Maintenance		
Growth medium area				
Growth medium	A [b]		Water does not permeate growth media (runs off soil surface) or crusting is observed	Aerate (e.g., rake) or replace medium taking care not to damage the waterproof membrane
	A		Growth medium thickness is less than design thickness (due to erosion and plant uptake)	Supplement growth medium to design thickness
	B, W		Fallen leaves or debris are present	Remove/dispose
	A, W, S		Growth media erosion/scour is visible (e.g., gullies)	• Take steps to repair or prevent erosion • Fill, hand tamp, or lightly compact, and stabilize with additional soil substrate/growth medium (similar in nature to the original material) and additional plants
Erosion control measures	B [c]		Mat or other erosion control is damaged or depleted during plant establishment period	• Repair/replace erosion control measures until 90% vegetation coverage attained • Avoid application of mulch on extensive vegetated roofs
System Drainage and Structural Components				
Roof drain	B, S		Sediment, vegetation, or debris reducing capacity of inlet structure	• Clear blockage • Identify and correct any problems that led to blockage
	A		Pipe is clogged	Remove roots or debris
	A		Inlet pipe is in poor condition	Repair/replace

[a] Frequency: A = Annually; B = Biannually (twice per year); M = Monthly; W = At least once during the wet season (for debris/clog related maintenance, this visit should occur in the early fall, after deciduous trees have lost their leaves); S = Perform inspections after major storm events (24-hour storm event with a 10-year or greater recurrence interval).

[b] Inspection should occur during storm event.

[c] Inspection should occur during plant establishment period (typically first 2 years).

IPM – Integrated Pest Management

ISA – International Society of Arboriculture

Table 11 (continued). Maintenance Standards and Procedures for Vegetated Roofs.				
Component	Recommended Frequency [a]		Condition when Maintenance is Needed (Standards)	Action Needed (Procedures)
	Inspection	Routine Maintenance		
System Drainage and Structural Components (cont'd)				
Border zone	A		Vegetation is encroaching into border zone aggregate	Remove and dispose of weeds and transplant desirable vegetation to growth medium area
Flashing, gravel stops, utilities, or other structures on roof	A		Flashing, utilities or other structures on roof are deteriorating (can serve as source of metal pollution in vegetated roof runoff)	Repair (e.g., recoat) or replace to eliminate potential pollutant source. Note that any work done around flashings and drains should be done with care to protect the waterproof membrane.
Access and safety	B		Insufficient egress/ingress routes and fall protection	• Maintain egress and ingress routes to design standards and fire codes • Ensure appropriate fall protection
Vegetation				
Plant coverage	B		Vegetative coverage falls below 90% (unless design specifications stipulate less than 90% coverage)	• Plant bare areas with vegetation • If necessary, install erosion control measures until percent coverage goal is attained
Sedums		A (first 2 years in Spring); As needed (after first 2 years)	Extensive roof with low density sedum population	• Mulch mow sedums- creating cuttings from existing plants to encourage colonization
Dead plants	Fall and Spring		Dead vegetation is present	Normally dead plant material can be recycled on the roof; however, specific plants or aesthetic considerations may warrant removing and replacing dead material (see manufacturer's recommendations).
Trees and shrubs– intensive vegetated roof		All pruning seasons (timing varies by species)	Pruning as needed	All pruning of mature trees should be performed by or under the direct guidance of an ISA certified arborist

[a] Frequency: A = Annually; B = Biannually (twice per year); M = Monthly; W = At least once during the wet season (for debris/clog related maintenance, this visit should occur in the early fall, after deciduous trees have lost their leaves); S = Perform inspections after major storm events (24-hour storm event with a 10-year or greater recurrence interval).
[b] Inspection should occur during storm event.
[c] Inspection should occur during plant establishment period (typically first 2 years).
IPM – Integrated Pest Management
ISA – International Society of Arboriculture

Table 11 (continued). Maintenance Standards and Procedures for Vegetated Roofs.				
Component	Recommended Frequency [a]		Condition when Maintenance is Needed (Standards)	Action Needed (Procedures)
	Inspection	Routine Maintenance		
Vegetation (cont'd)				
Fertilization– extensive vegetated roof	A		Poor plant establishment and possible nutrient deficiency in growth medium	• Allow organic debris to replenish and maintain long-term nutrient balance and growth medium structure • Conduct annual soil test 2-3 weeks prior to the spring growth flush to assess need for fertilizer. Utilize test results to adjust fertilizer type and quantity appropriately. • Apply minimum amount slow-release fertilizer necessary to achieve successful plant establishment. • Apply fertilizer only after acquiring required approval from facility owner and operator. Note that extensive vegetated roofs are designed to require zero to minimal fertilization after establishment (excess fertilization can contribute to nutrient export)
Fertilization– intensive vegetated roof	A		Fertilization may be necessary during establishment period or for plant health and survivability after establishment	• Conduct annual soil test 2-3 weeks prior to the spring growth flush to assess need for fertilizer. Utilize test results to adjust fertilizer type and quantity appropriately. • Apply minimum amount slow-release fertilizer necessary to achieve successful plant establishment. • Apply fertilizer only after acquiring required approval from facility owner and operator. • Intensive vegetated roofs may require more fertilization than extensive vegetated roofs

[a] Frequency: A = Annually; B = Biannually (twice per year); M = Monthly; W = At least once during the wet season (for debris/clog related maintenance, this visit should occur in the early fall, after deciduous trees have lost their leaves); S = Perform inspections after major storm events (24-hour storm event with a 10-year or greater recurrence interval).
[b] Inspection should occur during storm event.
[c] Inspection should occur during plant establishment period (typically first 2 years).
IPM – Integrated Pest Management
ISA – International Society of Arboriculture

Table 11 (continued). Maintenance Standards and Procedures for Vegetated Roofs.				
Component	Recommended Frequency [a]		Condition when Maintenance is Needed (Standards)	Action Needed (Procedures)
	Inspection	Routine Maintenance		
Vegetation (cont'd)				
Weeds		M (March – October, preceding seed dispersal)	Weeds are present	• Remove weeds with their roots manually with pincer-type weeding tools, flame weeders, or hot water weeders as appropriate • Follow IPM protocols for weed management (see "Additional Maintenance Resources" for more information on IPM protocols)
Noxious weeds		M (March – October, proceeding seed dispersal)	Listed noxious vegetation is present (refer to current county noxious weed list)	• By law, class A & B noxious weeds must be removed, bagged and disposed as garbage immediately • Reasonable attempts must be made to remove and dispose of class C noxious weeds • It is strongly encouraged that herbicides and pesticides not be used in order to protect water quality; use of herbicides and pesticides may be prohibited in some jurisdictions
Irrigation System (or Watering)				
Irrigation system (if any)		Based on manufacturer's instructions	Irrigation system present	Follow manufacturer's instructions for operation and maintenance
Summer watering – extensive vegetated roof		Once every 1-2 weeks as needed during prolonged dry periods	Vegetation in establishment period (1-2 years)	Water weekly during periods of no rain to ensure plant establishment (30 to 50 gallons per 100 square feet)
		As needed	Established vegetation (after 2 years)	Water during drought conditions or more often if necessary to maintain plant cover (30 to 50 gallons per 100 square feet)

[a] Frequency: A = Annually; B = Biannually (twice per year); M = Monthly; W = At least once during the wet season (for debris/clog related maintenance, this visit should occur in the early fall, after deciduous trees have lost their leaves); S = Perform inspections after major storm events (24-hour storm event with a 10-year or greater recurrence interval).
[b] Inspection should occur during storm event.
[c] Inspection should occur during plant establishment period (typically first 2 years).
IPM – Integrated Pest Management
ISA – International Society of Arboriculture

Table 11 (continued). Maintenance Standards and Procedures for Vegetated Roofs.				
Component	Recommended Frequency [a]		Condition when Maintenance is Needed (Standards)	Action Needed (Procedures)
	Inspection	Routine Maintenance		
Irrigation System (or Watering) (cont'd)				
Summer watering – intensive vegetated roof		Once every 1-2 weeks as needed during prolonged dry periods	Vegetation in establishment period (1-2 years)	• Water deeply, but infrequently, so that the top 6 to 12 inches of the root zone is moist • Use soaker hoses or spot water with a shower type wand when irrigation system not present
		As needed	Established vegetation (after 2 years)	Water during drought conditions or more often if necessary to maintain plant cover
Pest Control				
Mosquitoes	B, S		Standing water remains for more than 3 days after the end of a storm	• Identify the cause of the standing water and take appropriate actions to address the problem (e.g., aerate or replace medium, unplug drainage) • Manually remove standing water and direct to storm drainage system • Do not use pesticides or *Bacillus thuringiensis israelensis* (Bti)
Nuisance animals	As needed		Nuisance animals causing erosion, damaging plants, or depositing large volumes of feces	• Reduce site conditions that attract nuisance species • Place predator decoys • Follow IPM protocols for specific nuisance animal issues (see "Additional Maintenance Resources" in Bioretention Facilities section for more information on IPM protocols)

[a] Frequency: A = Annually; B = Biannually (twice per year); M = Monthly; W = At least once during the wet season (for debris/clog related maintenance, this visit should occur in the early fall, after deciduous trees have lost their leaves); S = Perform inspections after major storm events (24-hour storm event with a 10-year or greater recurrence interval).

[b] Inspection should occur during storm event.

[c] Inspection should occur during plant establishment period (typically first 2 years).

IPM – Integrated Pest Management

ISA – International Society of Arboriculture

Additional Maintenance Resources

Useful related guidance documents include the following:

- Vegetation resources listed for bioretention
- LID Technical Guidance Manual for Puget Sound: http://www.wastormwatercenter.org/files/library/lid-manual-2012-final-secure.pdf
- Green Roof ANSI standards developed in conjunction with Green Roofs for Healthy Cities (GRHC). GRHC is a group working to increase awareness of the economic, social, and environmental benefits of vegetated roofs through education and outreach. GRHC standards used for fire and wind uplift design of vegetated roofs are the ANSI RP-14 and VF-1 standards. These standards cover several key design components of vegetated roofs that, once installed, require upkeep to maintain the functionality of these features.
- Integrated Pest Management (IPM) protocols (the term "pest" covers a broad range of species including harmful insects, plant pathogens, rodents, and weedy vegetation) provide an approach to pest control that uses regular monitoring to determine if and when treatments are needed, and employs physical, mechanical, cultural, and biological tactics to keep pest numbers low enough to prevent intolerable damage or annoyance (Ecology 2012c) while avoiding or minimizing the use of pesticides and fertilizers herbicides as a management strategy.
- See EPA's website for general information on IPM: www.epa.gov/pesticides/factsheets/ipm.htm.
- See the City of Seattle's website for IPM Fact Sheets and Washington specific resources: www.seattle.gov/util/forbusinesses/landscapes/integrated_pest_management
- The International Society of Arboriculture (ISA) is a group that promotes the professional practice of arboriculture and fosters a greater worldwide awareness of the benefits of trees through research, technology, and education. ISA standards used for managing trees, shrubs, and other woody plants are the American National Standards Institute (ANSI) A300 standards. The ANSI A300 standards are voluntary industry consensus standards developed by the Tree Care Industry Association (TCIA) and written by the Accredited Standards Committee (ASC). The ANSI standards can be found on the ISA website: www.isa-arbor.com/education/publications/index.aspx.

These resources are supplemental and do not supersede guidance provided in the S*tandards and Procedures* tables.

Equipment and Materials

Table 12 includes recommendations for equipment and materials commonly used to maintain vegetated roofs. Some of the equipment and materials will be used for routine maintenance activities, while other equipment and materials will be necessary for specialized maintenance.

Table 12. Vegetated Roof Equipment and Materials List.

General gardening and landscaping equipment	*Gardening and landscaping materials*
☐ Gloves	☐ Plants/seeds
☐ Weeding tool	☐ Growing media
☐ Soil knife	☐ Fertilizer (encapsulated, slow release)
☐ Hand tamper	*Erosion control material**
☐ Hoe	☐ Mulch (intensive roofs)
☐ Rake	☐ Erosion control matting
☐ Push broom	*Equipment and materials for subsurface or drip irrigation system repairs*
☐ Buckets	☐ Soaker hose
☐ Garbage bags (for disposal of noxious weeds)	☐ Hose/shower-type wand
Additional equipment for intensive roofs:	☐ Sprinklers
☐ Pruners	☐ Tree watering bags
☐ Loppers	☐ Buckets
☐ Manual edger	☐ Water source, if necessary
☐ Line trimmer (also known as a string trimmer, weed eater, or weed whacker)	*Safety equipment*
☐ Wheelbarrow	☐ Fall protection as applicable
☐ Shovel	
☐ Stakes and guys	

* Items not required for routine maintenance

Skills and Staffing

The skills required for the maintenance of vegetated roofs are listed in the text box to the right. Additional specialized skills may also be required for corrective maintenance of intensive vegetated roofs such as: horticulturalists and arborists.

The maintenance associated with vegetated roofs may sometimes pose safety hazards and require controls (e.g., fall protection) currently covered under the Washington State Department of Labor & Industries.

Skills Needed for Maintenance of Vegetated Roofs

- Landscaping skills (e.g., general plant care)
- Plant identification skills (weeds vs. planted species, invasive vs. common weeds, how to dispose of invasive weeds, timing of weed seed dispersal)
- General drainage system maintenance skills (e.g., subsurface or drip irrigation system repair)
- Roof work safety training
- Engineer and/or landscape architect for major maintenance
- Certified arborist (or equivalently trained staff) for pruning of mature trees (intensive vegetated roofs)

Table 13 provides some examples of staffing estimates from the City of Olympia and the BMP and LID Whole Life Cost Models (WERF 2009). The WERF (2009) study provides annual staffing estimates for a "typical" facility of undefined area, while the City of Olympia provided a staffing estimate as the area of vegetated roof that can be maintained per hour of staff time. Staffing estimates presented below range from 53 to 90 hours per facility from the WERF (2009) study (summing all of the routine maintenance activities) or 2,000 sf/hr for the City of Olympia.

Table 13. Maintenance Frequency and Staffing for Vegetated Roofs.

Routine Maintenance Activity	Frequency [a]	Annual Staff Hours	Source
Vegetation management	Every 2 months	30 to 60 hours (per facility)	BMP and LID Whole Life Cost Models (WERF 2009)
Irrigation repair	A	5 to 10 hours (per facility)	
Corrective maintenance [b]	A	8 hours (per facility)	
Soil replacement	A	8 hours (per facility)	
Recordkeeping	A	2 to 4 hours (per facility)	
General (no activity specified)	M	2,000 sf/hr	City of Olympia

[a] Frequency: A = Annually; M = Monthly
[b] Membrane patching, re-vegetation, component failure
sf/hr = square feet per hour

CONTECH®
STORMWATER SOLUTIONS INC.

Vortechs® Guide
Operation, Design, Performance and Maintenance

Vortechs®

Vortechs®

The Vortechs system is a high-performance hydrodynamic separator that effectively removes finer sediment (e.g. 50-microns (μm), oil, and floating and sinking debris. The swirl concentration operation and flow controls work together to minimize turbulence and provide stable storage of captured pollutants. Precast models can treat peak design flows up to 30-cfs (850-L/s); cast-in-place models handle even greater flows. A typical system is sized to provide a specific removal efficiency of a predefined particle size distribution (PSD).

Operation Overview

Stormwater enters the swirl chamber inducing a gentle swirling flow pattern and enhancing gravitational separation. Sinking pollutants stay in the swirl chamber while floatables are stopped at the baffle wall. Vortechs systems are usually sized to efficiently treat the frequently occurring runoff events and are primarily controlled by the low flow control orifice. This orifice effectively reduces inflow velocity and turbulence by inducing a slight backwater that is appropriate to the site.

During larger storms, the water level rises above the low flow control orifice and begins to flow through the high flow control. Any layer of floating pollutants is elevated above the invert of the Floatables Baffle Wall, preventing release. Swirling action increases in relation to the storm intensity, while sediment pile remains stable. When the storm drain is flowing at peak capacity, the water surface in the system approaches the top of the high flow control. The Vortechs system will be sized large enough so that previously captured pollutants are retained in the system, even during these infrequent events.

As a storm subsides, treated runoff decants out of the Vortechs system at a controlled rate, restoring the water level to a dry-weather level equal to the invert of the inlet pipe. The low water level facilitates easier inspection and cleaning, and significantly reduces maintenance costs by reducing pump-out volume.

Design Basics

Each Vortechs system is custom designed based on site size, site runoff coefficient, regional precipitation intensity distribution, and anticipated pollutant characteristics. There are two primary methods of sizing a Vortechs system. The first is to determine which model size provides the desired removal efficiency at a given flow for a defined particle size or PSD. The second and more in depth method is the summation of Rational Rainfall Method™ which uses a summation process described below in detail and is used when a specific removal efficiency of the net annual sediment load is required.

Typically Vortechs systems are designed to achieve an 80% annual solids load reduction based on lab generated performance curves for either 50-μm particles, or a particle gradation found in typical urban runoff (see performance section of this manual for more information).

The Rational Rainfall Method™

Differences in local climate, topography and scale make every site hydraulically unique. It is important to take these factors into consideration when estimating the long-term performance of any stormwater treatment system. The Rational Rainfall Method combines site-specific information with laboratory generated performance data, and local historical precipitation records to estimate removal efficiencies as accurately as possible.

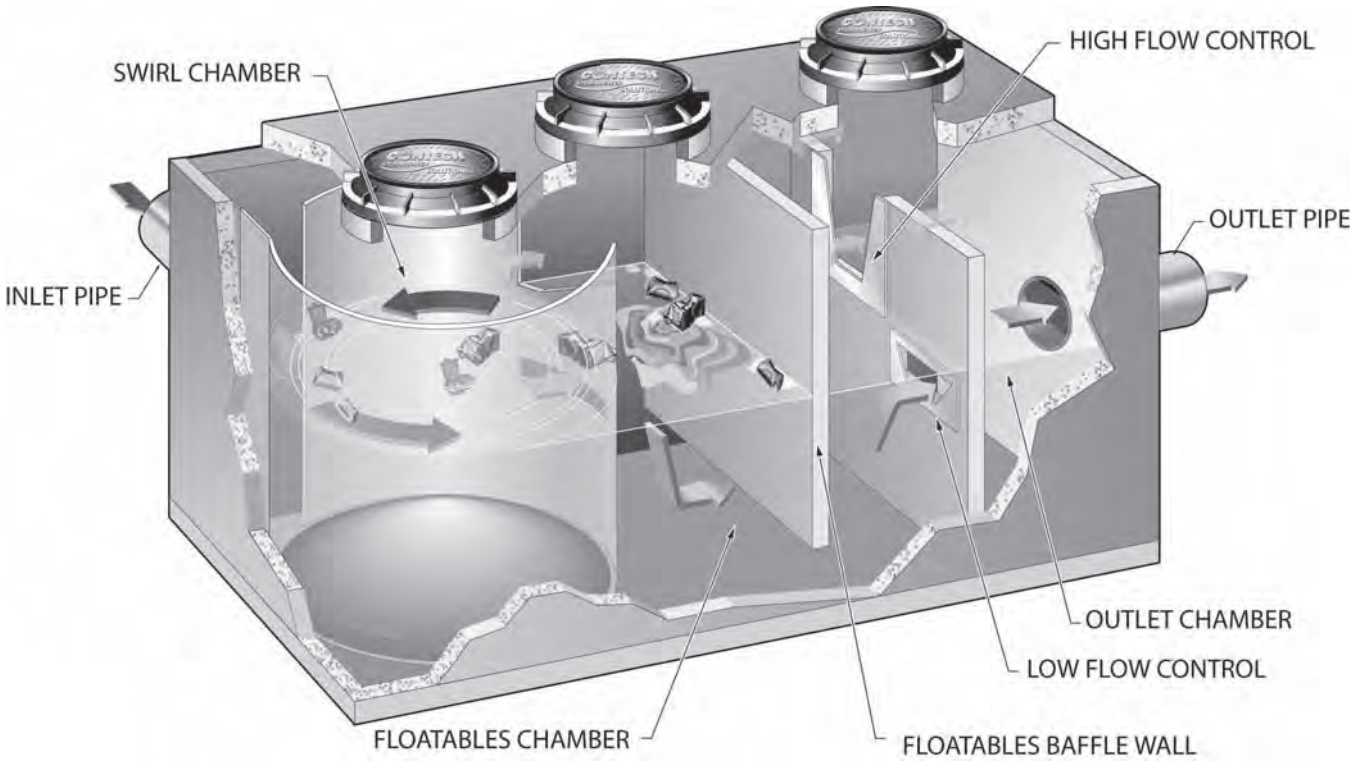

Short duration rain gauge records from across the United States and Canada were analyzed to determine the percent of the total annual rainfall that fell at a range of intensities. US stations' depths were totaled every 15 minutes or hourly and recorded in 0.01-inch increments. Depths were recorded hourly with 1-mm resolution at Canadian stations. One trend was consistent at all sites; the vast majority of precipitation fell at low intensities and high intensity storms contributed relatively little to the total annual depth.

These intensities, along with the total drainage area and runoff coefficient for each specific site, are translated into flow rates using the Rational Rainfall Method. Since most sites are relatively small and highly impervious, the Rational Rainfall Method is appropriate. Based on the runoff flow rates calculated for each intensity, operating rates within a proposed Vortechs system are determined. Performance efficiency curve determined from full scale laboratory tests on defined sediment PSDs is applied to calculate solids removal efficiency. The relative removal efficiency at each operating rate is added to produce a net annual pollutant removal efficiency estimate.

Once a system size is established, the internal elements of the system are designed based on information provided by the site engineer. Flow control sizes and shapes, sump depth, oil spill storage capacity, sediment storage volume and inlet and outlet orientation are determined for each system. In addition, bypass weir calculations are made for off-line systems.

Flow Control Calculations

Low Flow Control

The low flow control, or orifice, is typically sized to submerge the inlet pipe when the Vortechs system is operating at 20% of its treatment capacity. The orifice is typically a Cippoletti shaped aperture defined by its flat crest and sides which incline outwardly at a slope of 1 horizontal to 4 vertical.

$$Q_{orfice} = C_d \bullet A \bullet \sqrt{2gh}$$

Where:

$Q_{orifice}$ = flow through orifice, cfs (L/s)

C_d = orifice coefficient of discharge = 0.56 (based on lab tests)

A = orifice flow area, ft^2 (m^2) (calculated by orifice geometry)

h = design head, ft (m) (equal to the inlet pipe diameter)

g = acceleration due to gravity (32.2-ft/s^2 (9.81-m/s^2)

The minimum orifice crest length is 3-in (76-mm) and the minimum orifice height is 4-in (102-mm). If flow must be restricted beyond what can be provided by this size aperture, a Fluidic-Amp™ HydroBrake flow control will be used. The HydroBrake allows the minimum flow constriction to remain at 3-in (76-mm) or greater while further reducing flow due to its unique throttling action.

High Flow Control

The high flow control, or weir, is sized to pass the peak system capacity minus the peak orifice flow when the water surface elevation is at the top of the weir. This flow control is also a Cippoletti type weir.

The weir flow control is sized by solving for the crest length and head in the following equation:

$$Q_{weir} = C_d \bullet L \bullet (h)^{3/2}$$

Where:

Q_{weir} = flow through weir, cfs (L/s)

C_d = Cippoletti weir coefficient = 3.37 (based on lab testing)

h = available head, ft (m) (height of weir)

L = design weir crest length, ft (m)

Bypass Calculations

In most all cases, pollutant removal goals can be met without treating peak flow rates and it is most feasible to use a smaller Vortechs system configured with an external bypass. In such cases, a bypass design is recommended by CONTECH Stormwater Solutions for each off-line system. To calculate the bypass capacity, first subtract the system's treatment capacity from the peak conveyance capacity of the collection system (minimum of 10-year recurrence interval). The result is the flow rate that must be bypassed to avoid surcharging the Vortechs system. Then use the following arrangement of the Francis formula to calculate the depth of flow over the bypass weir.

$$H = (Q_{bypass} / (C_d \bullet L))^{2/3}$$

Where:

H = depth of flow over bypass weir crest, ft (m)

Q_{bypass} = required bypass flow, cfs (L/s)

C_d = discharge coefficient = 3.3 for rectangular weir

L = length of bypass weir crest, ft

The bypass weir crest elevation is then calculated to be the elevation at the top of the Cippoletti weir minus the depth of flow.

Hydraulic Capacity

In the event that the peak design flow from the site is exceeded, it is important that the Vortechs system is not a constriction to runoff leaving the site. Therefore, each system is designed with enough hydraulic capacity to pass the 100-year flow rate. It is important to note that at operating rates above 100-gpm/ft^2 (68-Lps/m^2) of the swirl chamber area (peak treatment capacity), captured pollutants may be lost.

When the system is operating at peak hydraulic capacity, water will be flowing through the gap over the top of the flow control wall as well as the orifice and the weir.

Performance

Full Scale Laboratory Test Results

Laboratory testing was conducted on a full scale Vortechs model 2000. The 150-μm curve demonstrates the results of tests using particles that passed through a 60-mesh sieve and were retained on a 100-mesh sieve. The 50-μm curve is based on tests of particles passing through a 200-mesh sieve and retained on a 400-mesh sieve (38-μm). A gradation with an average particle size (d50) of 80-μm, containing particles ranging from 38–500-μm in diameter was used to represent typical stormwater solids. (Table 1)

Particle Size Distribution (μm)	Percentage of Sample Make-Up
<63	42%
63 - 75	4%
75 - 100	9%
100 - 150	7%
150 - 250	11%
>250	27%

Table 1: Particle gradation of typical urban runoff used for efficiency curve

As shown, the Vortechs system maintains positive total suspended solids (TSS), defined by the tested gradations, removal efficiencies over the full range of operating rates. This allows the system to effectively treat all runoff from large, infrequent design storms, as well as runoff from more frequent low-intensity storms.

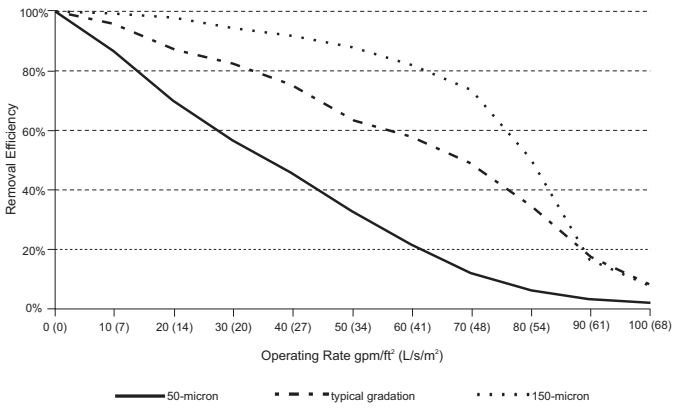

Figure 1: Vortechs model 2000 Removal Efficiencies

Typical Vortechs systems are designed to treat peak flows from 1.6-cfs (45-L/s) up to 30-cfs (850-L/s) online without the need for bypass. However, external bypasses can be configured to convey peak flows around the system if treatment capacity is exceeded. The system can also be configured to direct low flows from the last chamber of the system to polishing treatment when more stringent water quality standards are imposed. In all configurations, high removal efficiencies are achieved during the lower intensity storms, which constitute the majority of annual rainfall volume.

Full report available at www.contechstormwater.com.

Laboratory Testing

Full reports available at www.contechstormwater.com

Technical Bulletin 1: Removal Efficiencies for Selected Particle Gradations

Technical Bulletin 2: Particle Distribution of Sediments and the Effect on Heavy Metal Removal

Technical Bulletin 3: Sizing for Net Annual Sediment Removal

Technical Bulletin 3a: Determining Bypass Weir Elevation for Off-Line Systems

Technical Bulletin 4: Modeling Long Term Load Reduction: The Rational Rainfall Method

Technical Bulletin 5: Oil Removal Efficiency

Field Monitoring

Following are brief summaries of the field tests completed to date.

Full reports available at www.contechstormwater.com

DeLorme Mapping Company
Yarmouth, ME
CONTECH Stormwater Solutions

Prior to this premier field test of the Vortechs system, CONTECH developed an extensive body of laboratory data to document total suspended solids (TSS) removal efficiency. CONTECH performed this field study in order to compare the performance predicted using laboratory data to the performance of a correctly sized system in the field.

The study site was the headquarters of DeLorme Mapping in Yarmouth, Maine. The building, driveway, parking lot and ancillary facilities were constructed in 1996. A Vortechs model 11000 was installed to treat runoff from the 300-space, 4-acre (1.62-ha) parking lot.

Testing Period	May 1999 to Dec 1999
# of Storms Sampled	20
Mean Influent Concentration	328-mg/L
Mean Effluent Concentration	60-mg/L
Removal Efficiency	82%

The main purpose of the DeLorme study was to verify that the sizing methodology developed from our full-scale laboratory testing was valid and an accurate means of predicting field performance. The results of the study confirmed our sizing methodology.

Village Marine Drainage
Lake George, NY
New York State Department of Environmental Conservation, Division of Water

The New York State DEC used funds obtained in a Section 319 grant to initiate a study of the effectiveness of the Vortechs system to remove sediment and other pollutants transported

by stormwater to Lake George, Lake George Village, New York. "Since the 1970s, when there was a rapid increase in the rate and concentration of development along the southwestern shores of Lake George, we have been concerned about the impact of stormwater discharges into the lake," said Tracy West, co-author of the study.

Testing Period	Feb 2000 to Dec 2000
# of Storms Sampled	13
Mean Influent Concentration	801-mg/L
Mean Effluent Concentration	105-mg/L
Removal Efficiency	88%

The study concluded that the Village and Town of Lake George should consider installing additional Vortechs systems in areas where sedimentation and erosion have been identified as non-point source pollution problems.

Harding Township Rest Area
Harding Township, NJ
RTP Environmental Associates

This third party evaluation was performed under a U.S. Environmental Protection Agency grant, administered by the New Jersey Department of Environmental Protection. A. Roger Greenway, principal of RTP Environmental Associates, Inc., conducted the study in conjunction with Thonet Associates, which assisted with data analysis and helped develop best management practices (BMP) recommendations.

The Vortechs model 4000 was sized to handle a 100-year storm from the 3 acre (1.21 ha) paved parking area at the Harding Rest Stop, located off the northbound lane of I-287 in Harding Township, New Jersey.

Testing Period	May 1999 to Nov 2000
# of Storms Sampled	5
Mean Influent Concentration (TSS)	493-mg/L
Mean Effluent Concentration (TSS)	35-mg/L
Removal Efficiency (TSS)	93%
Mean Influent Concentration (TPH)	16-mg/L
Mean Effluent Concentration (TPH)	5-mg/L
Removal Efficienty (TPH)	67%

The study concluded that truck rest stops and similar parking areas would benefit from installing stormwater treatment systems to mitigate the water quality impacts associated with stormwater runoff from these sites.

Timothy Edwards Middle School
South Windsor, CT
UCONN Department of Civil & Environmental Engineering

This study of the Vortechs system was published as a thesis by Susan Mary Board, as part of the requirements for a Master of Science degree from the University of Connecticut. Her objective was to determine how well the Vortechs system retained pollutants from parking lot runoff, including total suspended solids (TSS), nutrients, metals, and petroleum hydrocarbons.

A Vortechs model 5000 was installed in 1998 to treat runoff from the 82-space parking lot of Timothy Edwards Middle School. The entire watershed was approximately 2 acres (0.81 ha), and was 80% impervious.

Testing Period	Jul 2000 to Apr 2001
# of Storms Sampled	weekly composite samples taken
Mean Influent Concentration	324-mg/L
Mean Effluent Concentration	73-mg/L
Removal Efficiency	77%

Additionally, the Vortechs system was particularly effective in removing zinc (85%), lead (46%), copper (56%), phosphorus (67%) and nitrate (54%).

The study concluded that the Vortechs system significantly reduced effluent concentrations of many pollutants in stormwater runoff.

Maintenance

The Vortechs system should be inspected at regular intervals and maintained when necessary to ensure optimum performance. The rate at which the system collects pollutants will depend more heavily on site activities than the size of the unit, e.g., unstable soils or heavy winter sanding will cause the swirl chamber to fill more quickly but regular sweeping will slow accumulation.

Inspection

Inspection is the key to effective maintenance and is easily performed. Pollutant deposition and transport may vary from year to year and regular inspections will help ensure that the system is cleaned out at the appropriate time. Inspections should be performed twice per year (i.e. spring and fall) however more frequent inspections may be necessary in equipment washdown areas and in climates where winter sanding operations may lead to rapid accumulations. It is useful and often required as part of a permit to keep a record of each inspection. A simple inspection and maintenance log form for doing so is provided on the following page, and is also available on contechstormwater.com.

The Vortechs system should be cleaned when inspection reveals that the sediment depth has accumulated to within 12 to 18 inches (300 to 450 mm) of the dry-weather water surface elevation. This determination can be made by taking two measurements with a stadia rod or similar measuring device; one measurement from the manhole opening to the top of the sediment pile and the other from the manhole opening to the water surface. Note: To avoid underestimating the volume of sediment in the chamber, the measuring device must be carefully lowered to the top of the sediment pile. Finer, silty particles at the top of the pile typically offer less resistance to the end of the rod than larger particles toward the bottom of the pile.

Cleaning

Cleaning of the Vortechs system should be done during dry weather conditions when no flow is entering the system. Clean-out of the Vortechs system with a vacuum truck is generally the most effective and convenient method of excavating pollutants from the system. If such a truck is not available, a "clamshell" grab may be used, but it is difficult to remove all accumulated pollutants using a "clamshell".

In installations where the risk of petroleum spills is small, liquid contaminants may not accumulate as quickly as sediment. However, an oil or gasoline spill should be cleaned out immediately. Motor oil and other hydrocarbons that accumulate on a more routine basis should be removed when an appreciable layer has been captured. To remove these pollutants, it may be preferable to use adsorbent pads to solidify the oil since these pads are usually much easier to remove from the unit individually and less expensive to dispose of than the oil/water emulsion that may be created by vacuuming the oily layer. Floating trash can be netted out if you wish to separate it from the other pollutants.

Cleaning of a Vortechs system is typically done by inserting a vacuum hose into the swirl chamber and evacuating this chamber of water and pollutants. As water is evacuated, the water level outside of the swirl chamber will drop to a level roughly equal to the crest of the lower aperture of the swirl chamber. The water outside the swirl chamber should remain near this level throughout pumping as the bottom and sides of the swirl chamber are sealed to the tank floor and walls. This "water lock" feature prevents water from migrating into the swirl chamber, exposing the bottom of the baffle wall and creating excess pump-out volume. Floating pollutants will decant into the swirl chamber as the water level is drawn down. This allows most floating material to be withdrawn from the same access point above the swirl chamber. Floating material that does not decant into the swirl chamber during draw down should be skimmed from the baffle chamber. If maintenance is not performed as recommended, sediment may accumulate outside the swirl chamber. If this is the case, it may be necessary to pump out other chambers. It is advisable to check for sediment accumulation in all chambers during inspection and maintenance.

These maintenance recommendations apply to all Vortechs systems with the following exceptions:

1. It is strongly recommended that when cleaning systems larger than the Model 16000 the baffle chamber be drawn down to depth of three feet prior to beginning clean-out of the swirl chamber. Drawing down this chamber prior to the swirl chamber reduces adverse structural forces pushing upstream on the swirl chamber once that chamber is empty.
2. Entry into a Vortechs system is generally not required as cleaning can be done from the ground surface. However, if manned entry into a system is required the entire system should be evacuated of water prior to entry regardless of the system size.

Manhole covers should be securely seated following cleaning activities to prevent leakage of runoff into the system from above and also to ensure proper safety precautions. If anyone physically enters the unit, Confined Space Entry procedures need to be followed.

Disposal of all material removed from the Vortechs system should be done in accordance with local regulations. In many locations, disposal of evacuated sediments may be handled in the same manner as disposal of sediments removed from catch basins or deep sump manholes. Check your local regulations for specific requirements on disposal.

For assistance with maintaining your Vortechs system, contact us regarding the CONTECH Maintenance Compliance Certification Program.

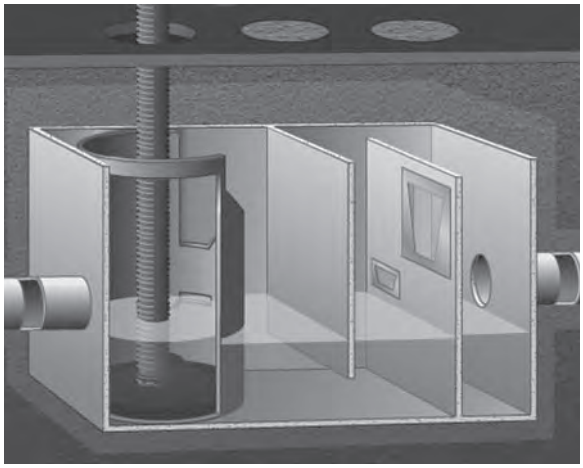

Vortechs Inspection & Maintenance Log

Vortech Model: _____ Location: _____

Date	Water depth to sediment[1]	Floatable Layer Thickness[2]	Describe Maintenance Performed	Maintenance Personnel	Comments

1. The water depth to sediment is determined by taking two measurements with a stadia rod: one measurement from the manhole opening to the top of the sediment pile and the other from the manhole opening to the water surface. If the difference between these measurements is less than eighteen inches the system should be cleaned out. **Note: To avoid underestimating the volume of sediment in the chamber, the measuring device must be carefully lowered to the top of the sediment pile.**

2. For optimum performance, the system should be cleaned out when the floating hydrocarbon layer accumulates to an appreciable thickness. In the event of an oil spill, the system should be cleaned immediately.

RECYCLED PAPER

CONTECH® STORMWATER SOLUTIONS™

800.925.5240
contechstormwater.com

Support

- Drawings and specifications are available at www.contechstormwater.com.
- Site-specific design support is available from our engineers.

©2008 CONTECH Stormwater Solutions

CONTECH Construction Products Inc. provides site solutions for the civil engineering industry. CONTECH's portfolio includes bridges, drainage, sanitary sewer, stormwater and earth stabilization products. For information on other CONTECH division offerings, visit contech-cpi.com or call 800.338.1122

Nothing in this catalog should be construed as an expressed warranty or an implied warranty of merchantability or fitness for any particular purpose. See the CONTECH standard quotation or acknowledgement for applicable warranties and other terms and conditions of sale.

The product(s) described may be protected by one or more of the following US patents: 5,322,629; 5,624,576; 5,707,527; 5,759,415; 5,788,848; 5,985,157; 6,027,639; 6,350,374; 6,406,218; 6,641,720; 6,511,595; 6,649,048; 6,991,114; 6,998,038; 7,186,058; 7,296,692; 7,297,266; related foreign patents or other patents pending.

vx_manual 03/08 3M

NO. 2 – INFILTRATION FACILITIES

Maintenance Component	Defect or Problem	Conditions When Maintenance Is Needed	Results Expected When Maintenance Is Performed
Inlet/Outlet Pipes	Sediment accumulation	Sediment filling 20% or more of the pipe.	Inlet/outlet pipes clear of sediment.
	Trash and debris	Trash and debris accumulated in inlet/outlet pipes (includes floatables and non-floatables).	No trash or debris in pipes.
	Damaged	Cracks wider than ½-inch at the joint of the inlet/outlet pipes or any evidence of soil entering at the joints of the inlet/outlet pipes.	No cracks more than ¼-inch wide at the joint of the inlet/outlet pipe.
Access Manhole	Cover/lid not in place	Cover/lid is missing or only partially in place. **Any open manhole requires immediate maintenance.**	Manhole access covered.
	Locking mechanism not working	Mechanism cannot be opened by one maintenance person with proper tools. Bolts cannot be seated. Self-locking cover/lid does not work.	Mechanism opens with proper tools.
	Cover/lid difficult to remove	One maintenance person cannot remove cover/lid after applying 80 lbs of lift.	Cover/lid can be removed and reinstalled by one maintenance person.
	Ladder rungs unsafe	Missing rungs, misalignment, rust, or cracks.	Ladder meets design standards. Allows maintenance person safe access.
Large access doors/plate	Damaged or difficult to open	Large access doors or plates cannot be opened/removed using normal equipment.	Replace or repair access door so it can opened as designed.
	Gaps, doesn't cover completely	Large access doors not flat and/or access opening not completely covered.	Doors close flat and covers access opening completely.
	Lifting Rings missing, rusted	Lifting rings not capable of lifting weight of door or plate.	Lifting rings sufficient to lift or remove door or plate.
Infiltration Pond, Tank, Vault, Trench, or Small Basin Filter Bags	Plugged	Filter bag more than $^1/_2$ full.	Replace filter bag or redesign system.
Infiltration Pond, Tank, Vault, Trench, or Small Basin Pre-settling Ponds and Vaults	Sediment accumulation	6" or more of sediment has accumulated.	Pre-settling occurs as designed
Infiltration Pond, Rock Filter	Plugged	High water level on upstream side of filter remains for extended period of time or little or no water flows through filter during heavy rain storms.	Rock filter replaced evaluate need for filter and remove if not necessary.
Infiltration Pond Emergency Overflow Spillway	Rock missing	Only one layer of rock exists above native soil in area five square feet or larger, or any exposure of native soil at the top of out flow path of spillway. Rip-rap on inside slopes need not be replaced.	Spillway restored to design standards.
	Tree growth	Tree growth impedes flow or threatens stability of spillway.	Trees removed.

NO. 2 – INFILTRATION FACILITIES

Maintenance Component	Defect or Problem	Conditions When Maintenance Is Needed	Results Expected When Maintenance Is Performed
Site	Trash and debris	Any trash and debris which exceed 1 cubic foot per 1,000 square feet (this is about equal to the amount of trash it would take to fill up one standard size office garbage can). In general, there should be no visual evidence of dumping.	Trash and debris cleared from site.
	Noxious weeds	Any noxious or nuisance vegetation which may constitute a hazard to County personnel or the public.	Noxious and nuisance vegetation removed according to applicable regulations. No danger of noxious vegetation where County personnel or the public might normally be.
	Contaminants and pollution	Any evidence of contaminants or pollution such as oil, gasoline, concrete slurries or paint.	Materials removed and disposed of according to applicable regulations. Source control BMPs implemented if appropriate. No contaminants present other than a surface oil film.
	Grass/groundcover	Grass or groundcover exceeds 18 inches in height.	Grass or groundcover mowed to a height no greater than 6 inches.
Infiltration Pond, Top or Side Slopes of Dam, Berm or Embankment	Rodent holes	Any evidence of rodent holes if facility is acting as a dam or berm, or any evidence of water piping through dam or berm via rodent holes.	Rodents removed or destroyed and dam or berm repaired.
	Tree growth	Tree growth threatens integrity of dams, berms or slopes, does not allow maintenance access, or interferes with maintenance activity. If trees are not a threat to dam, berm, or embankment integrity or not interfering with access or maintenance, they do not need to be removed.	Trees do not hinder facility performance or maintenance activities.
	Erosion	Eroded damage over 2 inches deep where cause of damage is still present or where there is potential for continued erosion. Any erosion observed on a compacted slope.	Slopes stabilized using appropriate erosion control measures. If erosion is occurring on compacted slope, a licensed civil engineer should be consulted to resolve source of erosion.
	Settlement	Any part of a dam, berm or embankment that has settled 4 inches lower than the design elevation.	Top or side slope restored to design dimensions. If settlement is significant, a licensed civil engineer should be consulted to determine the cause of the settlement.
Infiltration Pond, Tank, Vault, Trench, or Small Basin Storage Area	Sediment accumulation	If two inches or more sediment is present or a percolation test indicates facility is working at or less than 90% of design.	Facility infiltrates as designed.
Infiltration Tank Structure	Plugged air vent	Any blockage of the vent.	Tank or vault freely vents.
	Tank bent out of shape	Any part of tank/pipe is bent out of shape more than 10% of its design shape.	Tank repaired or replaced to design.
	Gaps between sections, damaged joints or cracks or tears in wall	A gap wider than ½-inch at the joint of any tank sections or any evidence of soil particles entering the tank at a joint or through a wall.	No water or soil entering tank through joints or walls.
Infiltration Vault Structure	Damage to wall, frame, bottom, and/or top slab	Cracks wider than ½-inch, any evidence of soil entering the structure through cracks or qualified inspection personnel determines that the vault is not structurally sound.	Vault is sealed and structurally sound.

NO. 4 – CONTROL STRUCTURE/FLOW RESTRICTOR

Maintenance Component	Defect or Problem	Condition When Maintenance is Needed	Results Expected When Maintenance is Performed
Structure	Trash and debris	Trash or debris of more than ½ cubic foot which is located immediately in front of the structure opening or is blocking capacity of the structure by more than 10%.	No Trash or debris blocking or potentially blocking entrance to structure.
		Trash or debris in the structure that exceeds $^1/_3$ the depth from the bottom of basin to invert the lowest pipe into or out of the basin.	No trash or debris in the structure.
		Deposits of garbage exceeding 1 cubic foot in volume.	No condition present which would attract or support the breeding of insects or rodents.
	Sediment	Sediment exceeds 60% of the depth from the bottom of the structure to the invert of the lowest pipe into or out of the structure or the bottom of the FROP-T section or is within 6 inches of the invert of the lowest pipe into or out of the structure or the bottom of the FROP-T section.	Sump of structure contains no sediment.
	Damage to frame and/or top slab	Corner of frame extends more than ¾ inch past curb face into the street (If applicable).	Frame is even with curb.
		Top slab has holes larger than 2 square inches or cracks wider than ¼ inch.	Top slab is free of holes and cracks.
		Frame not sitting flush on top slab, i.e., separation of more than ¾ inch of the frame from the top slab.	Frame is sitting flush on top slab.
	Cracks in walls or bottom	Cracks wider than ½ inch and longer than 3 feet, any evidence of soil particles entering structure through cracks, or maintenance person judges that structure is unsound.	Structure is sealed and structurally sound.
		Cracks wider than ½ inch and longer than 1 foot at the joint of any inlet/outlet pipe or any evidence of soil particles entering structure through cracks.	No cracks more than $^1/_4$ inch wide at the joint of inlet/outlet pipe.
	Settlement/ misalignment	Structure has settled more than 1 inch or has rotated more than 2 inches out of alignment.	Basin replaced or repaired to design standards.
	Damaged pipe joints	Cracks wider than ½-inch at the joint of the inlet/outlet pipes or any evidence of soil entering the structure at the joint of the inlet/outlet pipes.	No cracks more than ¼-inch wide at the joint of inlet/outlet pipes.
	Contaminants and pollution	Any evidence of contaminants or pollution such as oil, gasoline, concrete slurries or paint.	Materials removed and disposed of according to applicable regulations. Source control BMPs implemented if appropriate. No contaminants present other than a surface oil film.
	Ladder rungs missing or unsafe	Ladder is unsafe due to missing rungs, misalignment, rust, cracks, or sharp edges.	Ladder meets design standards and allows maintenance person safe access.
FROP-T Section	Damage	T section is not securely attached to structure wall and outlet pipe structure should support at least 1,000 lbs of up or down pressure.	T section securely attached to wall and outlet pipe.
		Structure is not in upright position (allow up to 10% from plumb).	Structure in correct position.
		Connections to outlet pipe are not watertight or show signs of deteriorated grout.	Connections to outlet pipe are water tight; structure repaired or replaced and works as designed.
		Any holes—other than designed holes—in the structure.	Structure has no holes other than designed holes.
Cleanout Gate	Damaged or missing	Cleanout gate is missing.	Replace cleanout gate.

NO. 4 – CONTROL STRUCTURE/FLOW RESTRICTOR

Maintenance Component	Defect or Problem	Condition When Maintenance is Needed	Results Expected When Maintenance is Performed
		Cleanout gate is not watertight.	Gate is watertight and works as designed.
		Gate cannot be moved up and down by one maintenance person.	Gate moves up and down easily and is watertight.
		Chain/rod leading to gate is missing or damaged.	Chain is in place and works as designed.
Orifice Plate	Damaged or missing	Control device is not working properly due to missing, out of place, or bent orifice plate.	Plate is in place and works as designed.
	Obstructions	Any trash, debris, sediment, or vegetation blocking the plate.	Plate is free of all obstructions and works as designed.
Overflow Pipe	Obstructions	Any trash or debris blocking (or having the potential of blocking) the overflow pipe.	Pipe is free of all obstructions and works as designed.
	Deformed or damaged lip	Lip of overflow pipe is bent or deformed.	Overflow pipe does not allow overflow at an elevation lower than design
Inlet/Outlet Pipe	Sediment accumulation	Sediment filling 20% or more of the pipe.	Inlet/outlet pipes clear of sediment.
	Trash and debris	Trash and debris accumulated in inlet/outlet pipes (includes floatables and non-floatables).	No trash or debris in pipes.
	Damaged	Cracks wider than ½-inch at the joint of the inlet/outlet pipes or any evidence of soil entering at the joints of the inlet/outlet pipes.	No cracks more than ¼-inch wide at the joint of the inlet/outlet pipe.
Metal Grates (If Applicable)	Unsafe grate opening	Grate with opening wider than $^{7}/_{8}$ inch.	Grate opening meets design standards.
	Trash and debris	Trash and debris that is blocking more than 20% of grate surface.	Grate free of trash and debris. footnote to guidelines for disposal
	Damaged or missing	Grate missing or broken member(s) of the grate.	Grate is in place and meets design standards.
Manhole Cover/Lid	Cover/lid not in place	Cover/lid is missing or only partially in place. **Any open structure requires urgent maintenance**.	Cover/lid protects opening to structure.
	Locking mechanism Not Working	Mechanism cannot be opened by one maintenance person with proper tools. Bolts cannot be seated. Self-locking cover/lid does not work.	Mechanism opens with proper tools.
	Cover/lid difficult to Remove	One maintenance person cannot remove cover/lid after applying 80 lbs. of lift.	Cover/lid can be removed and reinstalled by one maintenance person.

NO. 5 – CATCH BASINS AND MANHOLES

Maintenance Component	Defect or Problem	Condition When Maintenance is Needed	Results Expected When Maintenance is Performed
Structure	Sediment	Sediment exceeds 60% of the depth from the bottom of the catch basin to the invert of the lowest pipe into or out of the catch basin or is within 6 inches of the invert of the lowest pipe into or out of the catch basin.	Sump of catch basin contains no sediment.
	Trash and debris	Trash or debris of more than ½ cubic foot which is located immediately in front of the catch basin opening or is blocking capacity of the catch basin by more than 10%.	No Trash or debris blocking or potentially blocking entrance to catch basin.
		Trash or debris in the catch basin that exceeds $^1/_3$ the depth from the bottom of basin to invert the lowest pipe into or out of the basin.	No trash or debris in the catch basin.
		Dead animals or vegetation that could generate odors that could cause complaints or dangerous gases (e.g., methane).	No dead animals or vegetation present within catch basin.
		Deposits of garbage exceeding 1 cubic foot in volume.	No condition present which would attract or support the breeding of insects or rodents.
	Damage to frame and/or top slab	Corner of frame extends more than ¾ inch past curb face into the street (If applicable).	Frame is even with curb.
		Top slab has holes larger than 2 square inches or cracks wider than ¼ inch.	Top slab is free of holes and cracks.
		Frame not sitting flush on top slab, i.e., separation of more than ¾ inch of the frame from the top slab.	Frame is sitting flush on top slab.
	Cracks in walls or bottom	Cracks wider than ½ inch and longer than 3 feet, any evidence of soil particles entering catch basin through cracks, or maintenance person judges that catch basin is unsound.	Catch basin is sealed and structurally sound.
		Cracks wider than ½ inch and longer than 1 foot at the joint of any inlet/outlet pipe or any evidence of soil particles entering catch basin through cracks.	No cracks more than $^1/_4$ inch wide at the joint of inlet/outlet pipe.
	Settlement/ misalignment	Catch basin has settled more than 1 inch or has rotated more than 2 inches out of alignment.	Basin replaced or repaired to design standards.
	Damaged pipe joints	Cracks wider than ½-inch at the joint of the inlet/outlet pipes or any evidence of soil entering the catch basin at the joint of the inlet/outlet pipes.	No cracks more than ¼-inch wide at the joint of inlet/outlet pipes.
	Contaminants and pollution	Any evidence of contaminants or pollution such as oil, gasoline, concrete slurries or paint.	Materials removed and disposed of according to applicable regulations. Source control BMPs implemented if appropriate. No contaminants present other than a surface oil film.
Inlet/Outlet Pipe	Sediment accumulation	Sediment filling 20% or more of the pipe.	Inlet/outlet pipes clear of sediment.
	Trash and debris	Trash and debris accumulated in inlet/outlet pipes (includes floatables and non-floatables).	No trash or debris in pipes.
	Damaged	Cracks wider than ½-inch at the joint of the inlet/outlet pipes or any evidence of soil entering at the joints of the inlet/outlet pipes.	No cracks more than ¼-inch wide at the joint of the inlet/outlet pipe.

NO. 5 – CATCH BASINS AND MANHOLES

Maintenance Component	Defect or Problem	Condition When Maintenance is Needed	Results Expected When Maintenance is Performed
Metal Grates (Catch Basins)	Unsafe grate opening	Grate with opening wider than $^{7}/_{8}$ inch.	Grate opening meets design standards.
	Trash and debris	Trash and debris that is blocking more than 20% of grate surface.	Grate free of trash and debris. footnote to guidelines for disposal
	Damaged or missing	Grate missing or broken member(s) of the grate. **Any open structure requires urgent maintenance.**	Grate is in place and meets design standards.
Manhole Cover/Lid	Cover/lid not in place	Cover/lid is missing or only partially in place. **Any open structure requires urgent maintenance.**	Cover/lid protects opening to structure.
	Locking mechanism Not Working	Mechanism cannot be opened by one maintenance person with proper tools. Bolts cannot be seated. Self-locking cover/lid does not work.	Mechanism opens with proper tools.
	Cover/lid difficult to Remove	One maintenance person cannot remove cover/lid after applying 80 lbs. of lift.	Cover/lid can be removed and reinstalled by one maintenance person.

NO. 6 – CONVEYANCE PIPES AND DITCHES

Maintenance Component	Defect or Problem	Conditions When Maintenance is Needed	Results Expected When Maintenance is Performed
Pipes	Sediment & debris accumulation	Accumulated sediment or debris that exceeds 20% of the diameter of the pipe.	Water flows freely through pipes.
	Vegetation/roots	Vegetation/roots that reduce free movement of water through pipes.	Water flows freely through pipes.
	Contaminants and pollution	Any evidence of contaminants or pollution such as oil, gasoline, concrete slurries or paint.	Materials removed and disposed of according to applicable regulations. Source control BMPs implemented if appropriate. No contaminants present other than a surface oil film.
	Damage to protective coating or corrosion	Protective coating is damaged; rust or corrosion is weakening the structural integrity of any part of pipe.	Pipe repaired or replaced.
	Damaged	Any dent that decreases the cross section area of pipe by more than 20% or is determined to have weakened structural integrity of the pipe.	Pipe repaired or replaced.
Ditches	Trash and debris	Trash and debris exceeds 1 cubic foot per 1,000 square feet of ditch and slopes.	Trash and debris cleared from ditches.
	Sediment accumulation	Accumulated sediment that exceeds 20% of the design depth.	Ditch cleaned/flushed of all sediment and debris so that it matches design.
	Noxious weeds	Any noxious or nuisance vegetation which may constitute a hazard to County personnel or the public.	Noxious and nuisance vegetation removed according to applicable regulations. No danger of noxious vegetation where County personnel or the public might normally be.
	Contaminants and pollution	Any evidence of contaminants or pollution such as oil, gasoline, concrete slurries or paint.	Materials removed and disposed of according to applicable regulations. Source control BMPs implemented if appropriate. No contaminants present other than a surface oil film.
	Vegetation	Vegetation that reduces free movement of water through ditches.	Water flows freely through ditches.
	Erosion damage to slopes	Any erosion observed on a ditch slope.	Slopes are not eroding.
	Rock lining out of place or missing (If Applicable)	One layer or less of rock exists above native soil area 5 square feet or more, any exposed native soil.	Replace rocks to design standards.

NO. 7 – DEBRIS BARRIERS (E.G., TRASH RACKS)

Maintenance Component	Defect or Problem	Condition When Maintenance is Needed	Results Expected When Maintenance is Performed.
Site	Trash and debris	Trash or debris plugging more than 20% of the area of the barrier.	Barrier clear to receive capacity flow.
	Sediment accumulation	Sediment accumulation of greater than 20% of the area of the barrier	Barrier clear to receive capacity flow.
Structure	Cracked broken or loose	Structure which bars attached to is damaged - pipe is loose or cracked or concrete structure is cracked, broken of loose.	Structure barrier attached to is sound.
Bars	Bar spacing	Bar spacing exceeds 6 inches.	Bars have at most 6 inche spacing.
	Damaged or missing bars	Bars are bent out of shape more than 3 inches.	Bars in place with no bends more than ¾ inch.
		Bars are missing or entire barrier missing.	Bars in place according to design.
		Bars are loose and rust is causing 50% deterioration to any part of barrier.	Repair or replace barrier to design standards.

Attachment D

Project Selection Process

This page intentionally left blank.

Working Draft - For Preliminary Review Purposes Only

Table 1 - Level I Retrofit Project Ranking Criteria and Scoring

Criteria		Scoring		
Type	**Name**	**Values**	**Description**	**Information Sources Used for Scoring**
Feasibility	Infiltration Feasibility [a]	3	Good shallow infiltration feasibility	Infiltration Feasibility Assessment (Aspect 2014)
		2	Moderate shallow (i.e., underdrains may be needed) or good deep infiltration feasibility	
		1	Moderate deep infiltration feasibility or limited shallow infiltration feasibility (i.e., underdrains and/or impermeable liners likely needed)	
		0	Shallow and deep infiltration infeasible	
	Site Slope [a]	3	Flat (0-3%)	GIS analysis, windshield survey
		2	Moderate (3-5%)	
		1	Steep (>5%)	
Risk	Environment [b]	3	Sites located outside creek buffers and at least 100 feet from existing wells, steep slopes, and critical areas; or project would restore creek buffer from a degraded condition	GIS analysis, windshield survey
		2	Sites located in creek buffer or less than 100 feet from above elements, risks considered minor and can be mitigated with proper design, construction, and maintenance	
		1	Sites located in creek buffer or less than 100 feet from above elements, high environmental risk	
Benefit	Subbasin Retrofit Need [a,c]	3	High (subbasin unit area runoff > 0.1 cfs/acre), indicates relatively high need for flow control	HSPF Modeling (MGS 2014)
		2	Moderate (subbasin unit area runoff between 0.05-0.1 cfs/acre)	
		1	Low (subbasin unit area runoff < 0.05 cfs/acre), indicates relatively low need for flow control	
		0	Closed depression	
	Connectivity to Storm Conveyance System	3	Runoff contributes to major stormwater conveyance trunk line or creek drainage within 500 feet of site boundary	GIS analysis, windshield survey
		2	Runoff contributes to major stormwater conveyance trunk line within 1,000 feet of site boundary	
		1	Disconnected (i.e., runoff sheet flows off site and infiltrates, site lies within closed depression, connectivity controlled by pumps, etc.)	
		0	Closed depression	

Notes

a - For projects with multiple possible scores, the dominant score was used (i.e. if a project covered 500 feet of moderate slope [score of 2] and 400 feet of steep slope [score of 1], an overall score of 2 was assigned).

b - Environmental Risk was assessed based on the City of Burien's creek buffer GIS data layer and 100 foot buffers developed in GIS around floodplains, aquifer recharge areas, landslide hazards, seismic hazards, and wetlands.

c - Subbasin Retrofit Need was based on modeled unit area runoff rates, representing the ratio of the modeled 2-year recurrence interval peak flow to the tributary drainage area at the subbasin outlet. Modeling was based on existing conditions.

Working Draft - For Preliminary Review Purposes Only

Table 2 - Level I Potential Retrofit Project Site Evaluation

Potential Retrofit Project				Other Planned Projects [a]	Potential Retrofit Project Evaluation						
Rank	Retrofit Project ID	Location	Potential Retrofit Opportunities	Proposed Improvements	Infiltration Feasibility	Risk to Environment	Site Slope	Subbasin Retrofit Need	Connectivity to Storm Conveyance System	Total	Notes
1	B-27	S 152nd St from 1st Ave S to Des Moines Memorial Drive	Permeable bicycle lane, Silva Cells, and bioretention	Connect existing intermittent sidewalks and construct bicycle lane on both sides of roadway	3	3	3	3	3	15	Potential partnership opportunity with Highline High School.
2	B-50	John F. Kennedy Catholic High School (140 S 140th St)	Permeable parking, bioretention, infiltration gallery, and rainwater cisterns	Potential upgrade to playground and athletic fields	3	3	3	3	3	15	
3	B-21	Burien Community Center	Permeable parking, bioretention	N/A	2	3	3	3	3	14	Parking lot is newer. There are opportunities to convert the existing swale to bioretention, roof cisterns, and interpretive signage.
4	B-29	Moshier Park (422 SW 160th St)	Infiltration gallery, permeable parking, bioretention	Improve parking and construct bioretention	2	3	3	3	3	14	The park parking lot is shares with the Highline School District. Coordination between the two parties would be required.
5	B-31	Moshier Community Art Center (430 S 156th St)	Rainwater cistern, permeable pavement, bioretention	Improve parking, construct bioretention, and potentially improve Art Center building	3	3	3	3	2	14	Parking lot in very poor condition
6	B-39	S 160th St from 1st Ave S to Des Moines Memorial Drive	Permeable pavement, Silva Cells	Construct sidewalk to connect intermittent gaps and ADA compliant pedestrian ramps	3	2	3	3	3	14	The portion of the project area that crosses over Highway 509 would not be suitable for infiltration.
7	KC-47	King County District Court (601 SW 149th St)	Bioretention, additional storage	N/A	2	3	3	3	3	14	
8	B-40	SW 165th St from 16th Ave SW to 19th Ave SW	Permeable parking, bioretention	Regrade roadway to drain to the center and construct a storm drainage system	2	3	3	2	3	13	Burien Staff have assumed that bioretention could be added to this projects in front of properties that area supportive of the project.
9	B-19	SW 146th St from 1st Ave S to 14th Ave SW	Permeable bicycle lane, permeable sidewalk, Silva Cells	Constructed bicycle lanes and sidewalks on both sides of street	2	3	2	3	3	13	
10	B-20	6th Ave SW from SW 153rd St to SW 146th St	Permeable bicycle lane, permeable sidewalk	Bicycle lane, sidewalk	2	3	2	3	3	13	
11	B-26	2nd Ave SW from SW 150th St to SW 156th St	Permeable bicycle lane, permeable pavement, and Silva Cells	Bicycle lane, sidewalk	3	3	1	3	3	13	
12	B-28	Highline Performing Arts Center (401 S 152nd St)	Rainwater cistern	New development	3	3	1	3	3	13	
13	B-44	4th Ave S from S 168th St to S 165th St	Permeable pavement, bioretention	Construct storm drainage and water quality facilities	3	2	3	1	3	12	
14	B-32	SW/S 156th St/Ambaum Blvd SW from SW 154th St to Des Moines Memorial Drive	permeable pavement, bioretention	Construct bicycle lane, sidewalk, planter strip	3	3	1	2	3	12	The portion of the project area that crosses over Highway 509 would not be suitable for infiltration.

Working Draft - For Preliminary Review Purposes Only

Table 2 - Level I Potential Retrofit Project Site Evaluation

Potential Retrofit Project				Other Planned Projects [a]	Potential Retrofit Project Evaluation						
Rank	Retrofit Project ID	Location	Potential Retrofit Opportunities	Proposed Improvements	Infiltration Feasibility	Risk to Environment	Site Slope	Subbasin Retrofit Need	Connectivity to Storm Conveyance System	Total	Notes
15	B-22	S & SW 146th St from Ambaum Blvd SW to 8th Ave S	Permeable pavement, Silva Cells	Repair existing sidewalk make ADA improvements as necessary	2	3	1	3	3	12	
16	B-6	Puget Sound Park (135 SW 126th St)	Deep infiltration, permeable pavement, bioretention, and conveyance improvements	Improve parking, drainage, and sport courts and conduct trail maintenance	2	3	2	1	3	11	Burien staff indicated there are many major utilities running through the site. LID improvements would need to be focused on the flat to moderatly sloped portion of the site.
17	W-2	SR 518 from 1st Ave S to S 154th St	Bioretention, permeable shoulders	None	3	2	2	1	3	11	Coordination with WSDOT would be required. The portion of the project area that crosses over Highway 509 would not be suitable for infiltration. Project would need to be sited to avoid critical areas and/or improve creek buffers.
18	B-10	1st Ave S from SW 128th to SW 140th St	Bioretention	Reconstruct roadway including storm drainage conveyance, flow control and water quality facilities, and landscaping	2	3	2	1	3	11	
19	B-23	SW 152nd St from 10th Ave SW to 22nd Ave SW	Bioretention, permeable parking	Improve roadway with sidewalks, parking, bicycle lane, planter strip	2	2	3	1	3	11	The City of Burien has received numerous complaints about local flooding in the area.
20	NP-2	City Hall Park (801 SW 174th St)	Rainwater cisterns, vegetated roofs, bioretention, permeable parking, and infiltration gallery	Repair walking trail, sports field improvement, parking extension	3	3	3	1	1	11	
21	NP-8	1st Ave S from SW Normandy Road to 186th Ave SW	Permeable pavement and bioretention	Improve safety and mobility of roadway by adding permeable sidewalks, storm drainage, street trees, landscaped medians, and ADA compliant facilities	3	2	2	1	3	11	
22	NP-10	SW Normandy RD west of 4th Ave S to 8th Avenue SW	Permeable sidewalks, bioretention, and Silva Cells	Install curb and gutter, ADA compliant pedestrian improvements	3	2	1	2	3	11	Normandy Park is completing phase 1, from 1st to 4th, and this will tie in well. Field check for Level 1 while doing Level II.
23	B-38	4th Ave SW from SW 153rd St to SW 160th St	Permeable bicycle lane, permeable pavement, and Silva Cells	Reconstruct roadway to include storm drainage, curb and gutter, bicycle lanes, and sidewalk	3	2	1	2	3	11	Site located near Burien outlet tributary and could help improve hydrology.
24	B-24	12th Ave SW from SW 152nd St to SW 148th St	Permeable bicycle lane, permeable sidewalk, and Silva Cell	Bicycle lane, sidewalk	2	3	1	2	3	11	
25	B-41	16th Ave SW from SW 160th to SW 168th St	Permeable pavement, roadway bioretention, and Silva Cells	Storm drainage, reconstruct roadway, and sidewalk	2	3	1	2	3	11	

Working Draft - For Preliminary Review Purposes Only

Table 2 - Level I Potential Retrofit Project Site Evaluation

Potential Retrofit Project				Other Planned Projects [a]	Potential Retrofit Project Evaluation						
Rank	Retrofit Project ID	Location	Potential Retrofit Opportunities	Proposed Improvements	Infiltration Feasibility	Risk to Environment	Site Slope	Subbasin Retrofit Need	Connectivity to Storm Conveyance System	Total	Notes
26	B-25	SW 150th St from 1st Ave S to Ambaum Blvd SW	Permeable pavement, Silva Cells, and permeable sidewalk	Sidewalk	1	3	1	3	3	11	
27	NP-1	SW Suburban Sewer District Treatment Plant	Permeable pavement, roadway bioretention	None	1	3	3	1	3	11	LID Retrofit improvement would be focused on flat the portion of site. Creek buffer extremely degraded, could remove road on one side of creek and restore native vegetation.
28	W-1	SR 509 from S 120th St to Des Moines Memorial Drive	Bioretention, permeable pavement (median and shoulder)	None	3	2	2	1	3	11	Coordination with WSDOT would be required. Project would need to be sited to avoid critical areas and/or improve creek buffers.
29	S-1	Des Moines Memorial Drive, between S 128th Street and S 144th Street	Bioretention	None	3	2	2	2	2	11	The wetland northwest of the intersection of S 146th St and Des Moines Memorial Drive is not being considered for restoration, due to private land ownership.
30	B-3	1st Ave S from SW 116th St to SW 128th	Roadway bioretention, permeable pavement, and Silva Cells	Storm drainage, reconstruct roadway, landscaping, stormwater detention and water quality facility	1	2	2	3	3	11	
--	B-11	8th Ave S from S 136th St to SR 518/S 148th St	Roadway bioretention, permeable bicycle lane and sidewalk	Storm drainage, reconstruct roadway, landscaping, bicycle lane, and sidewalk	1	2	1	3	3	10	This project has been shortened to reflect that the improvements between SR 518 and Des Moines Memorial Drive will be constructed under another project.
--	B-14	8th Ave S from S 128th St to S 136th St	Roadway bioretention, permeable bicycle lane and sidewalk, and Silva Cells	Sidewalk, bicycle lanes, storm drainage, and landscaping	1	2	1	3	3	10	
--	B-42	Sylvester Rd from W City Limits to Highline Medical Center	Permeable pavement, bioretention, Silva Cells	N/A	3	2	1	1	3	10	
--	B-43	Ambaum Blvd S from S 160th St to S 174th St	Permeable bicycle lane, bioretention	Construct pathway/bicycle lane with swale or planter strip on one side	2	2	2	1	3	10	Potential for curb bulb-out bioretention at the intersections of S 169th Pl. and S 163rd Pl.

Working Draft - For Preliminary Review Purposes Only

Table 2 - Level I Potential Retrofit Project Site Evaluation

Potential Retrofit Project				Other Planned Projects [a]	Potential Retrofit Project Evaluation						
Rank	Retrofit Project ID	Location	Potential Retrofit Opportunities	Proposed Improvements	Infiltration Feasibility	Risk to Environment	Site Slope	Subbasin Retrofit Need	Connectivity to Storm Conveyance System	Total	Notes
--	B-45	Des Moines Memorial Drive from S 165th St to Normandy Rd	Permeable bicycle lane, permeable pavement, and Silva Cells	Reconstruct roadway constant with the Des Moines Memorial Drive corridor plan and Lake to Sound Trail, which will include storm drainage, landscaping, bicycle lane, sidewalk improvements.	2	2	2	1	3	10	The properties on the southern side of the roadway area downgradiant from the roadway.
--	NP-11	SW 178th St from 1st Ave S to SW 2nd Ave	Permeable sidewalks, Silva Cells	Install curb and gutter, ADA compliant pedestrian improvements, and pavement overlay	3	2	1	1	3	10	
--	B-1	1st Ave S from SW 116th to SW 128th St	Roadway bioretention, permeable shoulders	N/A	1	2	2	2	3	10	
--	B-2	Near 2nd Avenue SW, between SW 116th Street and SW 118th Street	Existing ditch retrofit	N/A	2	2	1	2	3	10	
--	B-35	10th Ave SW from SW 150th St to SW 160th St	Permeable bicycle lane, permeable pavement, and Silva Cells	Bicycle lane, sidewalk	1	3	1	2	3	10	
--	B-48	SW 119th St. from 1st Ave S to 4th Ave SW	Bioretention	N/A	2	2	1	2	3	10	
--	B-5	Southern Heights Park (12025 14th Ave S)	Permeable pavement	Parking and sport court improvement	3	2	1	2	2	10	
--	B-7	2nd Ave S from S 124th St to S 128th St	Bioretention, permeable pavement	N/A	1	2	2	2	3	10	
--	B-8	8th Ave S from S 124th St to S 128th St	Roadway bioretention, permeable bicycle lane and sidewalk, and Silva Cells	Storm drainage, landscaping, bicycle lane, and sidewalk	1	3	1	2	3	10	
--	KC-1	1st Ave S from SW 108th to SW 116th St	Roadway bioretention, permeable shoulders	N/A	1	3	2	2	2	10	
--	NP-12	Normandy Park Swim Club (17655 12th Ave SW)	Permeable pavement parking lot	N/A	1	2	3	1	3	10	
--	B-13	S 136th St from 1st Ave S to Des Moines Memorial Drive	Permeable pavement, bioretention, and Silva Cells	Construct bicycle lane, sidewalk	2	2	1	1	3	9	Potential for curb bulb-out at intersections. Portions of this potential project area are very steep and would not be suitable for infiltration. The portion of the project area that crosses over Highway 509 would not be suitable for infiltration.

Working Draft - For Preliminary Review Purposes Only

Table 2 - Level I Potential Retrofit Project Site Evaluation

Potential Retrofit Project				Other Planned Projects [a]	Potential Retrofit Project Evaluation						
Rank	Retrofit Project ID	Location	Potential Retrofit Opportunities	Proposed Improvements	Infiltration Feasibility	Risk to Environment	Site Slope	Subbasin Retrofit Need	Connectivity to Storm Conveyance System	Total	Notes
--	B-17	6th Ave SW & SW 148th St Intersection	Bioretention	Improve intersection by adding a left turn lane, undergrounding overhead utilities, major storm drainage replacement	1	3	1	1	3	9	Burien staff agreed this project should not be a Level II project due to low infiltration feasibility.
--	B-18	S 146th St from 1st Ave S to Des Moines Memorial Drive	bioretention, permeable bicycle lane	Construct bicycle lane	2	2	1	1	3	9	Burien staff agreed this project should not be a Level II project due to slopes. The portion of the project area that crosses over Highway 509 would not be suitable for infiltration.
--	B-34	SW 160th St from 8th Ave to SW 21st St	Permeable pavement, Silva Cells	Sidewalk	1	3	2	1	2	9	
--	B-36	8th Ave SW from Ambaum Blvd SW to Sylvester Rd SW	Permeable bicycle lane, permeable pavement	Storm drainage, bicycle lane, sidewalk, and parking	1	3	1	1	3	9	
--	B-9	SW 130th St. from 14th Ave SW to Ambaum Blvd SW	Cascade bioretention	Storm drainage, reconstruct roadway	1	3	1	1	3	9	
--	NP-5	Brittany Dr/ Normandy Terrace	Roadway bioretention	Culvert replacement	2	3	1	1	2	9	
--	NP-6	SW Normandy Terrace from Marine View Dr to Shoremont / Normandy Rd	Silva Cells, permeable sidewalk, and curb bulb-out	Sidewalk	1	3	1	1	3	9	
--	B-46	Walker Creek Wetland	Additional Storage (retrofit type TBD)	Parking improvement	1	2	1	2	3	9	
--	B-37	Lakeview Park (422 SW 160th St)	Rainwater cistern, permeable sport court	Redevelopment, sport court improvement	1	2	1	2	3	9	
--	B-4	Arbor Lake Park (12380 2nd Ave S)	Permeable pavement parking and trails	Parking improvement, trail extension	1	2	1	2	3	9	
--	B-52	Sylvester Middle School (16222 Sylvester Rd SW)	Permeable pavement, Rainwater cistern	N/A	1	2	1	2	3	9	Added based on client direction received 07.03.2014.
--	B-51	Chelsea Park (839 SW 136th St)	Bioretention, additional storage	N/A	2	3	3	0	0	8	
--	B-49	Goodwill (1031 SW 128th St)	Permeable parking and bioretention	N/A	1	2	1	1	3	8	
--	NP-9	SW 186th St from 1st Ave to 4th Ave	Silva Cells	Sidewalk	1	3	2	1	1	8	

Working Draft - For Preliminary Review Purposes Only

Table 2 - Level I Potential Retrofit Project Site Evaluation

Potential Retrofit Project				Other Planned Projects [a]	Potential Retrofit Project Evaluation						
Rank	Retrofit Project ID	Location	Potential Retrofit Opportunities	Proposed Improvements	Infiltration Feasibility	Risk to Environment	Site Slope	Subbasin Retrofit Need	Connectivity to Storm Conveyance System	Total	Notes
--	B-12	SW 136th St from 1st Ave S to Ambaum Blvd SW	Permeable shoulder, bioretention	Improve storm drainage, bicycle lane, sidewalk, parking	2	3	2	0	0	7	Wide street provide potentially good opportunities for permeable shoulders and planter strip bioretention.
--	B-33	SW 159th St & 19th Ave SW from SW 21st Ave to SW 160th St	Roadway bioretention, permeable pavement, and Silva Cells	Storm drainage, reconstruct roadway, bicycle lane, sidewalk, and parking	1	3	1	1	1	7	

Notes:

CIP Capital Improvement Project
MVSA Manhattan Village Sub-Area
N/A Not Applicable or Not Available
TIP Transportation Improvement
WSDOT Washington State Department of

a - Other Planned Projects are based on the City of Burien's TIP (2014-2019), Recreation and Open Space Plan (2000), and Bicycle and Pedestrian Facilities Plans (2004); the City of Normandy Park's TIP (2003-2008); and meetings with City of Burien, Normandy Park and King County staff.

b - Potential Retrofit Project Evaluation categories scored based on the Level I Criteria in Table 1.

Date: 10/8/2014 | Path: G:\Projects\Washington\King_County_000019\Miller_Walker_SW_221041\Map_Docs\Retrofit_Feasibility\Potential Projects\Potential_Retrofit_Project_Identification_level_1_projects.mxd

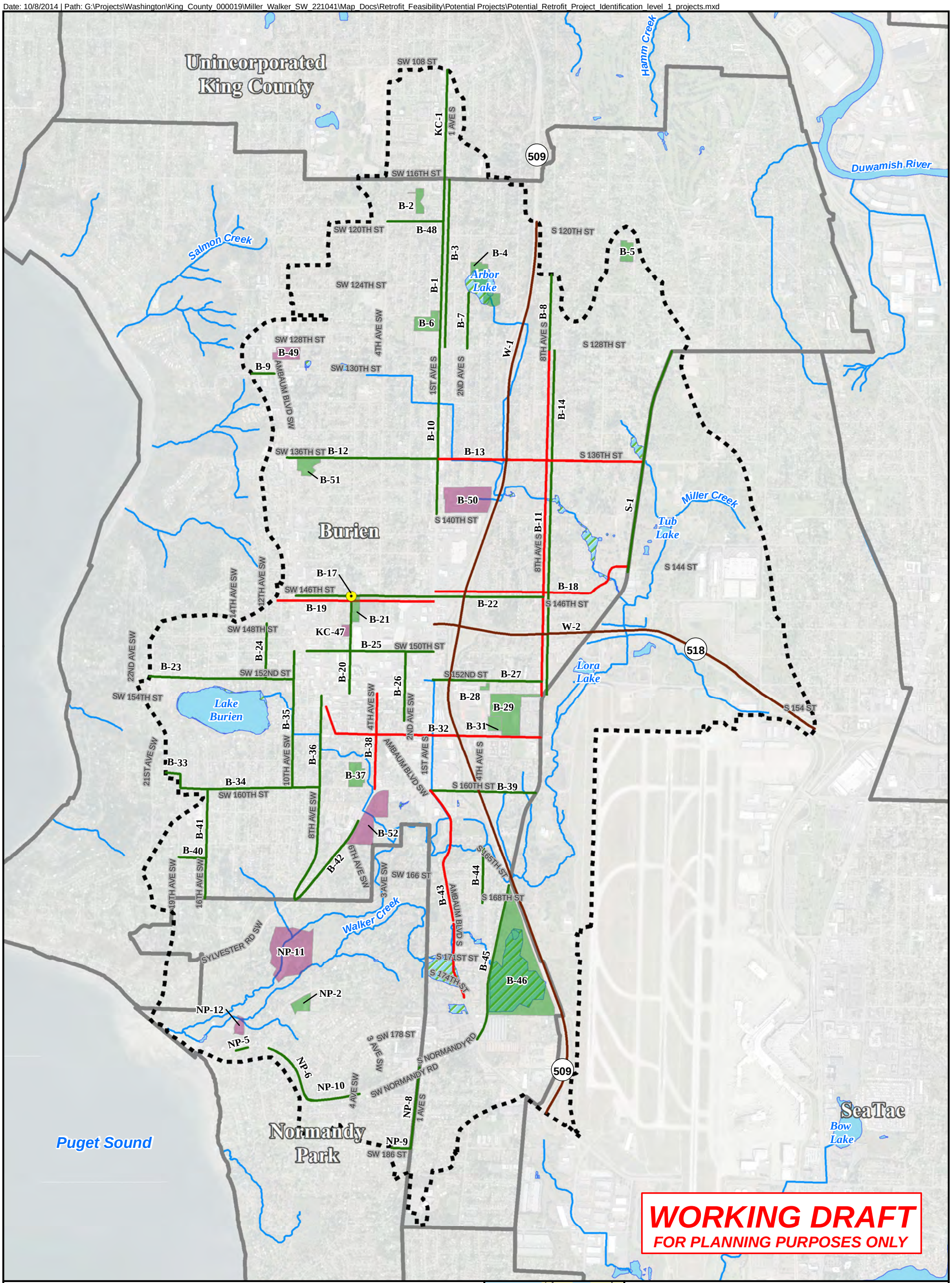

Legend

- Study Area Boundary
- City Boundary
- Stream
- Waterbody
- Wetland

Potential Retrofit Project

- Bike
- Road
- State Highway
- Intersection
- Park
- Parcel

Data Sources: King County (2014), City of Burien (2014)

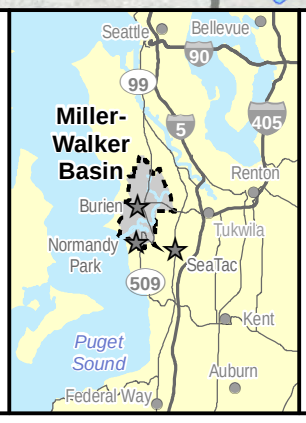

N W E S

0 2,000 4,000 Feet

King County

HDR

Potential Retrofit Projects - Level I

Miller-Walker Basin Stormwater Retrofit Planning Study

Working Draft - For Preliminary Review Purposes Only

Table 3 - Level II Retrofit Project Ranking Criteria and Scoring

Criteria		Scoring			
Type	**Name**	**Weight**	**Values**	**Description**	**Information Sources Used for Scoring**
Feasibility	Available Space	5%	3	Available right-of-way width for siting facilities (X) ≥ 10 feet, or available area of parcel is >50%	GIS analysis, field assessment
			2	7.5 feet ≤ X < 10 feet, or available area of parcel is 20-50%	
			1	X < 7.5 feet, or available area of parcel is <20%	
	Ease of funding	10%	3	Project expected to compete successfully for grant funding through Ecology's Stormwater LID Retrofit grant program. Project can be cost-effectively piggybacked on other infrastructure improvement projects	Professional judgment, review of other infrastructure improvement plans
			2	Project expected to compete successfully for grant funding through Ecology's Stormwater LID Retrofit grant program	
			1	Project not expected to compete successfully for grant funding; collaboration with other agencies makes funding more difficult	
	Land Ownership	5%	3	Site is located on public right-of-way	GIS analysis
			2	Site is located on private property. Additional coordination on land acquisition or easements likely needed	
			1	Site is located on private property. Retrofits would be owned and operated by private property owner	
	Constructability	5%	3	Good constructability. No significant access, utility, geotechnical, or other constructability issues identified	Field assessment
			2	Moderate constructability. Issues can likely be remedied during design and construction	
			1	Poor constructability due to access issues, utility conflicts, geotechnical, or other considerations	
Risk	Property	5%	3	No significant downgradient property issues identified	GIS analysis, field assessment
			2	Downgradient property issues relatively easily mitigated with proper design, construction, and maintenance	
			1	Significant down gradient property issues identified	
Benefit	Local/Subbasin Retrofit Need [a]	25%	3	High (subbasin unit area runoff > 0.1 cfs/acre), indicates relatively high need for flow control	HSPF Modeling (MGS 2014)
			2	Moderate (subbasin unit area runoff between 0.05-0.1 cfs/acre)	
			1	Low (subbasin unit area runoff < 0.05 cfs/acre), indicates relatively low need for flow control	
	Impervious Area Managed	20%	3	Project manages runoff from at least 10,000 square feet of Pollution Generating Impervious Surface (PGIS) surface	GIS analysis, field assessment
			2	Project manages runoff at least 5,000 square feet of PGIS	
			1	Project manages Non-Pollution Generating Impervious Surface (NPGIS) only	
	Educational Opportunities	10%	3	Project would incorporate hands-on educational opportunities (i.e., student maintenance of plants for projects located on school grounds, etc.)	Professional judgment
			2	Project would be highly visible. Signage or similar materials could be installed in highly visible places to help educate the public on stormwater management benefits	
			1	Project would have low public visibility and limited educational opportunities	
	Helps Achieve Multiple Goals	15%	3	Project can be completed in conjunction with other currently planned project. Project provides flow control, water quality treatment, and neighborhood enhancement (i.e., traffic calming, pedestrian/biker safety, aesthetic enhancement, etc.)	GIS analysis, field assessment
			2	Project provides flow control and water quality treatment	
			1	Project provides flow control only	

Notes

a - Subbasin Retrofit Need based on modeled unit area runoff rates, representing the ratio of the modeled 2-year recurrence interval peak flow to the tributary drainage area at the subbasin outlet. Modeling was based on existing conditions.

Working Draft - For Preliminary Review Purposes Only

Table 4 - Level II Potential Retrofit Project Site Evaluation

Potential Retrofit Projects				Other Planned Projects [a]	Level II Potential Retrofit Project Evaluation (Weighted Scores) [b]										
					5%	10%	5%	5%	5%	25%	20%	10%	15%	100%	Weighting Factors
Rank	Retrofit Project ID	Location	Potential Retrofit Opportunities	Proposed Improvements	Available Space	Ease of Funding	Land Ownership	Constructability	Property Risk	Local/Subbasin Retrofit Need	Impervious Area Managed	Educational Opportunities	Helps Achieve Multiple Goals	Total	Notes
1	B-29	Moshier Park (430 S 156th St)	Infiltration gallery, permeable parking, bioretention	Improve parking and construct bioretention	15	30	15	15	15	75	60	30	45	300	The Burien Parks Department plans to convert the fields to artificial turf using the same footprint. They are also interested in either an infiltration gallery or rainwater harvesting facility.
2	B-31	Moshier Community Art Center (430 S 156th St)	Rainwater cistern, permeable pavement, bioretention	Improve parking, construct bioretention, and potentially improve Art Center building	15	30	10	15	15	75	60	30	45	295	The park parking lot, which is in poor condition, is shared between the City of Burien and the Highline School District. Retrofits would require inter-jurisdiction coordination.
3	B-20	6th Ave SW from SW 153rd St to SW 146th St	Permeable pavement (permeable sidewalk, parking), bioretention, and Silva Cells	Construct sidewalks and bicycle lanes on both sides of the street	15	30	15	15	15	75	60	20	45	290	Existing curb bulb-outs on the intersection of 6th Ave SW and SW 150th St appear to be new, but could be converted to bioretention bulb-outs. Two mature trees south of the SW 152nd St and 6th Ave SW intersection would need to be protected during construction.
4	B-27	S 152nd St from 1st Ave S to Des Moines Memorial Drive	Permeable bicycle lane, permeable parking, Silva Cells, bioretention	Connect existing intermittent sidewalks and construct bicycle lane on both sides of roadway	10	30	15	15	15	75	60	20	45	285	Potential partnership opportunity with Highline High School. The portion of the project area that crosses over Highway 509 would not be suitable for infiltration.
5	B-24	12th Ave SW from SW 152nd St to SW 148th St	Permeable bicycle lane, permeable sidewalk, bioretention, and Silva Cell	Construct sidewalks and bicycle lanes on both sides of the street	15	30	15	15	15	50	60	20	45	265	
6	KC-47	King County District Court (601 SW 149th St & 14905 6th Ave SW)	Bioretention, additional storage, and permeable parking	Replacing existing parking lot on the south side of the courthouse	15	30	10	15	15	75	40	30	30	260	Existing on-site ditch/pond could be modified or expanded to allow additional stormwater runoff to be diverted from SW 148th St. Valuable trees to be protected during construction.
7	B-50	John F. Kennedy Catholic High School (140 S 140th St)	Permeable parking, bioretention, infiltration gallery, rainwater cisterns	Potential upgrade to playground and athletic fields.	15	10	5	15	15	75	60	30	30	255	Private school; track and ball field improvements have already begun.
8	B-39	S 160th St from 1st Ave S to Des Moines Memorial Drive	Permeable pavement, Silva Cells	Construct sidewalk to connect intermittent gaps and ADA compliant pedestrian ramps	15	20	15	15	15	75	60	10	30	255	The portion of the project area that crosses over Highway 509 would not be suitable for infiltration.
9	B-21	Burien Community Center	Permeable parking, bioretention rainwater cisterns	N/A	15	20	15	15	15	75	40	30	30	255	Parking lot is newer. There are opportunities to convert the existing swale to bioretention, roof cisterns, and interpretive signage. Valuable trees need to be protected during construction.
10	B-3	1st Ave S from SW 116th St to SW 128th	Roadway bioretention, permeable pavement, and Silva Cells	Reconstruct roadway to principal arterial standards including pedestrian, stormwater detention and water quality facilities, landscaping, driveway consolidation, and overhead to underground utilitiy conversion.	10	30	15	5	5	75	60	10	45	255	
11	NP-2	City Hall Park (801 SW 174th St)	Rainwater cisterns, vegetated roofs, bioretention, permeable parking, infiltration gallery	Repair walking trail, sports field improvement, parking extension	15	30	15	15	15	25	60	30	45	250	
12	B-10	1st Ave S from SW 128th to SW 140th St	Bioretention	Reconstruct roadway including storm drainage conveyance, flow control and water quality facilities, and landscaping	15	30	15	15	15	25	60	30	45	250	Public education nodes could be included along the project.
13	B-19	SW 146th St from 1st Ave S to 14th Ave SW	Permeable bicycle lane, permeable sidewalk, Silva Cells	Constructed bicycle lanes and sidewalks on both sides of street	5	10	15	15	15	75	60	10	45	250	Limited available space east of 6th Ave SW.

Working Draft - For Preliminary Review Purposes Only

Table 4 - Level II Potential Retrofit Project Site Evaluation

Potential Retrofit Projects				Other Planned Projects [a]	Level II Potential Retrofit Project Evaluation (Weighted Scores) [b]										
					5%	10%	5%	5%	5%	25%	20%	10%	15%	100%	Weighting Factors
Rank	Retrofit Project ID	Location	Potential Retrofit Opportunities	Proposed Improvements	Available Space	Ease of Funding	Land Ownership	Constructability	Property Risk	Local/Subbasin Retrofit Need	Impervious Area Managed	Educational Opportunities	Helps Achieve Multiple Goals	Total	Notes
14	NP-10	SW Normandy RD west of 4th Ave S to 8th Avenue SW	Permeable sidewalks, bioretention, Silva Cells	Install curb and gutter, ADA compliant pedestrian improvements	15	30	15	5	15	50	60	10	45	245	Downgradiant properties on the north side of the roadway. Facilities may require weirs due to steep roadway slope.
15	B-28	Highline Performing Arts Center (401 S 152nd St)	Rainwater cistern	Constructing an addition onto the existing building	15	10	5	15	15	75	60	30	15	240	
16	B-26	2nd Ave SW from SW 150th St to SW 156th St	Permeable bicycle lane, permeable pavement, and Silva Cells	Construct sidewalks and bicycle lanes on both sides of the street	10	30	15	5	10	75	40	10	45	240	Permeable sidewalk would require subsurface weirs due to roadway slope. The linkage between SW 152nd St and SW 150th St is currently private property and not connected.
17	B-6	Puget Sound Park (135 SW 126th St)	Deep infiltration, permeable pavement, bioretention, and conveyance improvements	Improve parking, drainage, and sport courts; and conduct trail maintenance	15	20	15	10	15	25	60	30	45	235	Burien staff indicated there are many major utilities running through the site.
18	B-41	16th Ave SW from SW 160th to SW 168th St	Permeable pavement, roadway bioretention, and Silva Cells	Reconstruct roadway including curb and gutter and major drainage replacement	15	30	15	15	15	50	40	10	45	235	Limited opportunities due to steep roadway slope south of the school.
19	B-32	SW/S 156th St/Ambaum Blvd SW from SW 154th St to Des Moines Memorial Drive	permeable pavement, bioretention	Construct bicycle lane, sidewalk, planter strip	5	20	15	15	15	50	60	20	30	230	The portion of the project area that crosses over Highway 509 would not be suitable for infiltration.
20	B-23	SW 152nd St from 10th Ave SW to 22nd Ave SW	Bioretention, permeable parking	Improve roadway with sidewalks, parking, bicycle lane, planter strip	10	30	15	15	10	25	60	20	45	230	The City of Burien has received numerous complaints about local flooding in the area.
21	B-25	SW 150th St from 1st Ave S to Ambaum Blvd SW	Permeable pavement, Silva Cells, and permeable sidewalk	Fill in gaps in intermittent sidewalks and make ADA improvements	5	30	15	10	15	75	20	10	45	225	
22	S-1	Des Moines Memorial Drive, between S 128th Street and S 144th Street	Bioretention, Silva Cells, permeable walking path	None	15	10	15	15	15	50	60	10	30	220	The wetland northwest of the intersection of S 146th St and Des Moines Memorial Drive is not being considered for restoration due to private land ownership. Although project provides opportunities for siting LID facilities, the benefits may be low due to low connectivity to storm conveyance systems.
23	W-1	SR 509 from S 120th St to Des Moines Memorial Drive	Bioretention, permeable pavement (median and shoulder)	None	15	20	15	15	15	25	60	10	45	220	
24	B-22	S & SW 146th St from Ambaum Blvd SW to 8th Ave S	Permeable pavement, Silva Cells	Repair existing sidewalks and make ADA improvements	5	10	15	5	15	75	60	10	15	210	The portion of the project area that crosses over Highway 509 would not be suitable for infiltration. Facilities may require weirs to accommodate hilly topography.
25	B-40	SW 165th St from 16th Ave SW to 19th Ave SW	Permeable parking, bioretention	Regrade roadway to drain to the center and construct a storm drainage system	10	10	15	15	15	50	40	10	45	210	Downgradiant properties on the south side of roadway.

Working Draft - For Preliminary Review Purposes Only

Table 4 - Level II Potential Retrofit Project Site Evaluation

Potential Retrofit Projects				Other Planned Projects [a]	Level II Potential Retrofit Project Evaluation (Weighted Scores) [b]										
					5%	10%	5%	5%	5%	25%	20%	10%	15%	100%	Weighting Factors
Rank	Retrofit Project ID	Location	Potential Retrofit Opportunities	Proposed Improvements	Available Space	Ease of Funding	Land Ownership	Constructability	Property Risk	Local/Subbasin Retrofit Need	Impervious Area Managed	Educational Opportunities	Helps Achieve Multiple Goals	Total	Notes
26	W-2	SR 518 from 1st Ave S to S 154th St	Bioretention, permeable shoulders	None	15	20	15	15	15	25	60	10	30	205	Coordination with WSDOT would be required. The portion of the project area that crosses over Highway 509 would not be suitable for infiltration.
27	NP-8	1st Ave S from SW Normandy Road to 186th Ave SW	Permeable sidewalks and bioretention	Improve safety and mobility of roadway by adding permeable sidewalks, storm drainage, street trees, landscaped medians, and ADA compliant facilities	15	20	15	15	15	25	40	10	45	200	
28	B-44	4th Ave S from S 168th St to S 165th St	Permeable pavement, bioretention, Filterra	Construct storm drainage and water quality facilities	10	20	15	15	15	25	40	10	45	195	
29	B-38	4th Ave SW from SW 153rd St to SW 160th St	Permeable bicycle lane, permeable pavement, Silva Cells	Reconstruct roadway to include storm drainage, curb and gutter, bicycle lanes, and sidewalk	5	10	15	5	5	50	40	10	45	185	Site located near Burien outlet tributary and could help improve hydrology.
30	NP-1	SW Suburban Sewer District Treatment Plant	Permeable pavement, roadway bioretention	None	5	10	15	15	15	25	40	10	15	150	

Notes:

CIP Capital Improvement Project
MVSA Manhattan Village Sub-Area
N/A Not Applicable or Not Available
TIP Transportation Improvement Project
WSDOT Washington State Department of Transportation

a - Other Planned Projects are based on the City of Burien's TIP (2014-2019), Recreation and Open Space Plan (2000), and Bicycle and Pedestrian Facilities Plans (2004); the City of Normandy Park's TIP (2003-2008); and meetings with City of Burien, Normandy Park and King County staff.

b - Weighted Scores calculated by multiplying unweighted scores by weighting values for each criterion for each project. See Table 3 for Level II criteria scores and weighting values.

MILLER-WALKER BASIN
STORMWATER RETROFIT PROJECT

POTENTIAL RETROFIT PROJECTS
LEVEL II

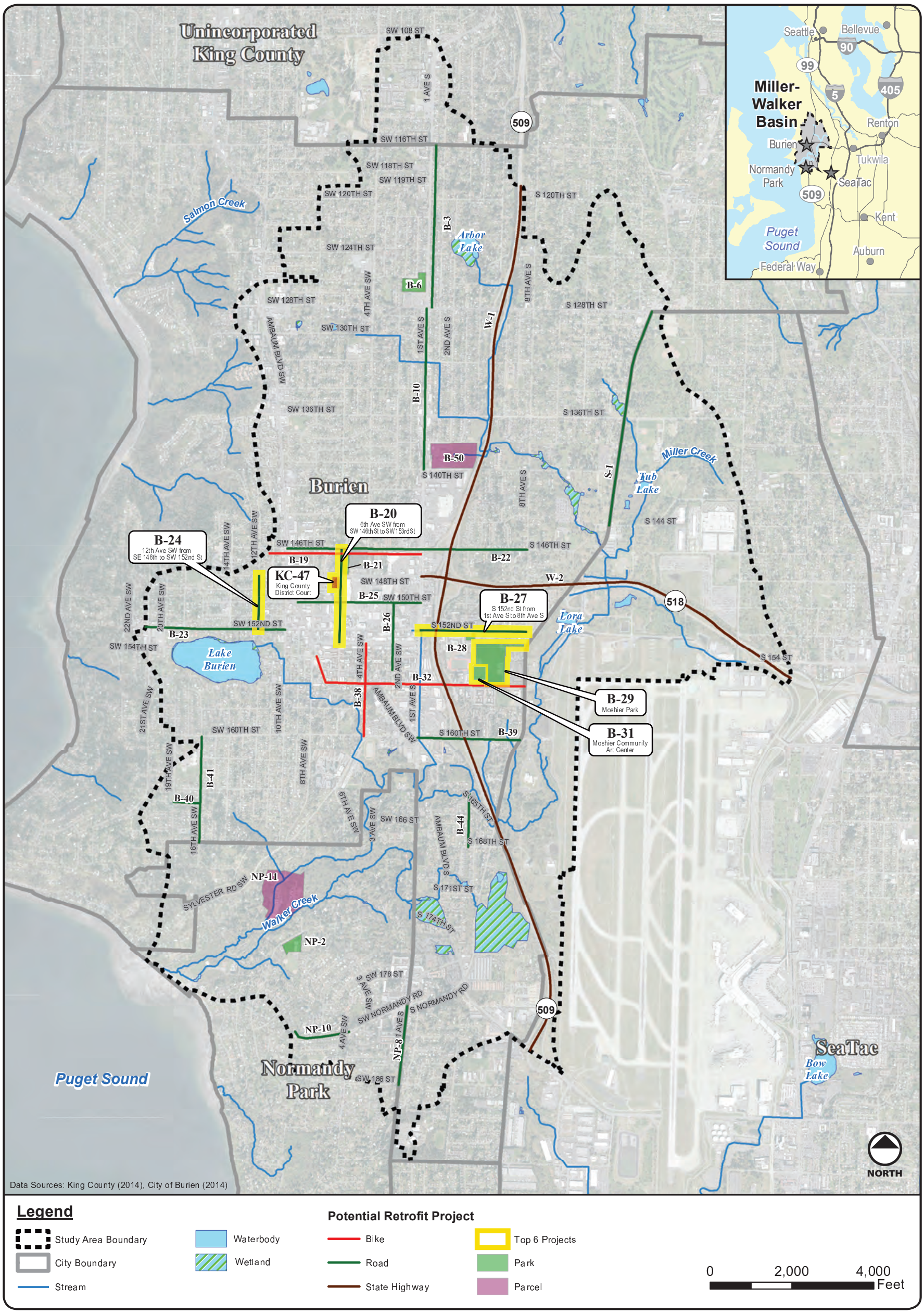

WORKING DRAFT FOR PLANNING PURPOSES ONLY

Attachment E

Basin Modeling Report

This page intentionally left blank.

MILLER/WALKER STORMWATER RETROFIT ANALYSIS
Hydrologic Performance of Top 30 Projects

March 2, 2015

Bruce Barker P.E., MGS Engineering Consultants, Inc.

Overview

The purpose of this analysis was to provide information on the potential hydrologic benefit of proposed stormwater retrofit projects in the Miller and Walker Creek Watershed. The retrofit projects include one or more types of Green Stormwater Infrastructure (GSI) facilities. Eighty projects were identified and were prioritized using criteria developed during the basin partner meetings. The effectiveness of the top ranked 30 retrofit projects was simulated using a calibrated HSPF watershed model developed as part of the Miller and Walker Creeks Basin Plan (King County DNR, 2006), the Port of Seattle's Airport Expansion Project (Parametrix, Inc., 2001) and analyses to identify the bedload movement characteristics and develop habitat improvement structures in the lower reaches of Miller and Walker Creeks (MGS Engineering Consultants, 2008, 2009, 2013).

Results of this analysis are presented using statistics computed from simulated streamflow from the HSPF model. These statistics include High Pulse Count (HPC), High Pulse Range (HPR), Benthic Index of Biotic Integrity (B-IBI), and peak 2-year discharge rate. Statistical models developed for the WRIA 9 Stormwater Retrofit Study (Horner, 2013) were used to estimate potential improvement in B-IBI scores assuming no other limiting factors are present. These statistics are reported at the outlet of each modeled subbasin. Two scenarios were examined: *Existing Conditions* and *Existing Conditions with Proposed Retrofit Projects*. Existing conditions represents current hydrologic conditions in the watershed. Existing Conditions with Proposed Retrofit Projects includes the 30 proposed stormwater mitigation retrofit projects. The statistics for each scenario were compared to provide a measure of the effectiveness of the 30 projects at improving hydrologic and biological conditions in the watershed.

A spreadsheet screening tool was developed to estimate the potential B-IBI improvement for the 50 projects not analyzed using the HSPF model. The screening tool was developed using results from the HSPF hydrologic model used to analyze the top 30 ranked projects to develop a relationship between fraction of basin area mitigated and B-IBI score. Using this relationship, an estimate of the potential change in B-IBI score for each project could be made using the amount of basin area treated by the project as input.

Retrofit Projects Analyzed using the HSPF Model

The locations of the proposed 30 stormwater retrofit projects are shown in Figure 1. This is a planning-level analysis with estimates of tributary area and infiltration footprint for each project determined from available Geographic Information System (GIS) data and windshield field surveys. Many of the projects span across model subbasin boundaries, which required delineating separate tributary areas for each subbasin that the project was located in. A summary of each project showing the type(s) of GSI, the tributary area captured by each type of GSI, and the area of each type of facility proposed is shown in Table 1.

Each project may include up to five different types of GSI facilities. These include bioretention, permeable pavement, infiltration gallery, Silva Cell, and/or roof cistern. The goal of the modeling exercise was to simulate the effects of the proposed projects on the watershed hydrology and to estimate the potential B-IBI score improvement. Additional modeling of each project will be performed during construction design.

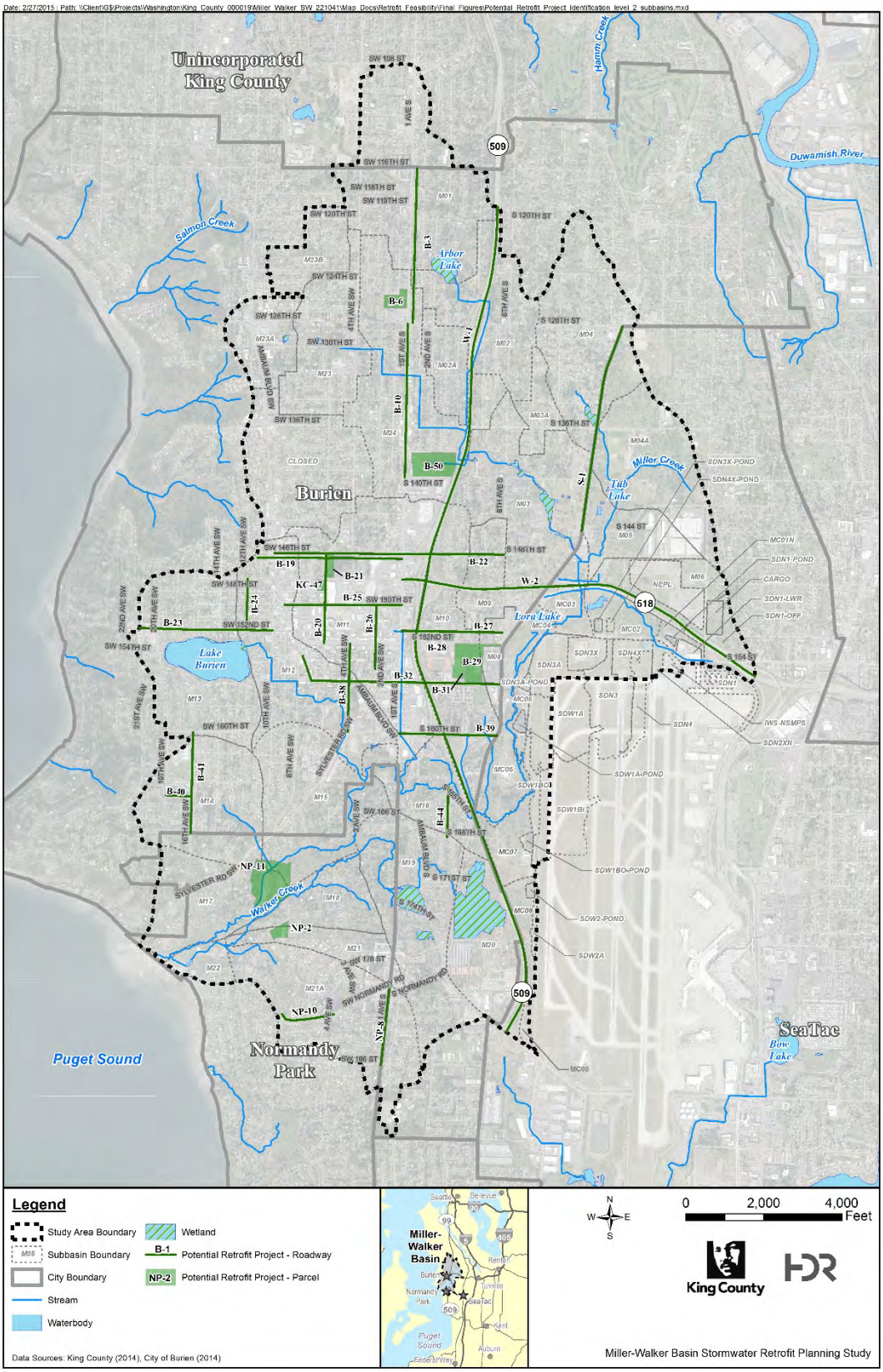

Figure 1 – Locations of Top 30 Stormwater Retrofit Projects

Table 1 – 30 Miller-Walker Basins Stormwater Retrofit Projects Included in HSPF Model

Project ID	Location	HSPF Model Subbasin	Area Tributary to Each GSI Facility Type (SF)	Available Infiltration Area (SF)				Roof area to Cistern (sf)
				Bioretention	Permeable Pavement	Infiltration Gallery	Silva Cell	
B-29 and 31	Moshier Park and Community Art Center (430 S 156th St)	M08	0	0	0	0	0	0
B-29 and 31		M10	380,880	0	0	10000	0	0
B-29 and 31		M10	156,867	4401	99585	0	1032	0
B-20	6th Ave SW from SW 153rd St to SW 146th St	M11	165,709	5400	31352	0	0	0
B-27	S 152nd St from 1st Ave S to Des Moines Memorial Drive	M08	42,823	400	0	0	0	0
B-27		M10	176,914	2294	43983	0	0	0
B-27		M11	3,735	0	0	0	0	0
B-24	12th Ave SW from SW 152nd St to SW 148th St	M12	84,508	3899	34344	0	0	0
KC-47	King County District Court (601 SW 149th St & 14905 6th Ave SW)	M11	57,033	3968	12000	0	0	0
B-50	John F. Kennedy Catholic High School (140 S 140th St)	M24	194,495	12760	110000	0	0	0
B-39	S 160th St from 1st Ave S to Des Moines Memorial Drive	M10	136,803	2600	0	0	1500	0
B-39		M11	77,960	4200	0	0	0	0
B-39		M16	10,207	0	0	0	0	0
B-21	Burien Community Center	M11	95,878	180	8400	0	0	4000
B-3	1st Ave S from SW 116th St to SW 128th	M24	152,207	0	10960	0	0	0
B-3		M01	408,491	0	20240	0	0	0
NP-2	City Hall Park (801 SW 174th St)	M18	31,399	390	8100	0	0	0
NP-2		M21	87,225	0	38000	0	0	0
NP-2		M21A	3,419	0	1600	0	0	0
B-10	1st Ave S from SW 128th to SW 140th St	M24	315,219	925	0	0	0	0
B-19	SW 146th St from 1st Ave S to 14th Ave SW	M11	223,850	0	26000	0	0	0
B-19		M12	96,277	0	0	0	0	0
NP-10	SW Normandy RD west of 4th Ave S to 8th Avenue SW	M21A	133,814	150	10000	0	1200	0
B-28	Highline Performing Arts Center (401 S 152nd St)	M10	25,671	0	0	0	0	25000
B-26	2nd Ave SW from SW 150th St to SW 156th St	M11	37,843	0	19600	0	0	0
B-6	Puget Sound Park (135 SW 126th St)	M24	44,842	8000	8800	0	0	0

Project ID	Location	HSPF Model Subbasin	Area Tributary to Each GSI Facility Type (SF)	Available Infiltration Area (SF)				Roof area to Cistern (sf)
				Bioretention	Permeable Pavement	Infiltration Gallery	Silva Cell	
B-41	16th Ave SW from SW 160th to SW 168th St.	M14	68,304	1120	9360	0	0	0
B-32	SW/S 156th St/Ambaum Blvd SW from SW 154th St to Des Moines Memorial Drive	M10	38,725	600	0	0	0	0
B-32		M11	25,736	1200	0	0	0	0
B-32		M12	60,619	1200	2400	0	0	0
B-23	SW 152nd St from 10th Ave SW to 22nd Ave SW	M12	51,312	450	4000	0	0	0
B-23		M13	128,035	1500	10000	0	0	0
B-25	SW 150th St from 1st Ave S to Ambaum Blvd SW	M11	29,215	0	7160	0	0	0
B-25		M12	10,059	0	0	0	0	0
S-1	Des Moines Memorial Drive, between S 128th Street and S 144th Street	M03	66,073	1200	0	0	0	0
S-1		M04	198,122	4800	0	0	0	0
S-1		M04A	30,693	1600	0	0	0	0
S-1		M05	50,545	2000	0	0	0	0
W-1	SR 509 from S 120th St to Des Moines Memorial Drive.	M02	273,809	9500	0	0	0	0
W-1		M02A	1,459	0	0	0	0	0
W-1		M10	527,810	37000	0	0	0	0
W-1		M11	393,141	14300	0	0	0	0
W-1		M16	173,152	4000	0	0	0	0
W-1		M20	521,267	26600	0	0	0	0
W-1		MC08	15,717	2500	0	0	0	0
B-22	S & SW 146th St from Ambaum Blvd SW to 8th Ave S	M11	222,553	0	26000	0	0	0
B-22		M12	105,415	0	0	0	0	0
B-40	SW 165th St from 16th Ave SW to 19th Ave SW	M14	43,070	1700	0	0	0	0
W-2	SR 518 from 1st Ave S to S 154th St	M03	61,082	1000	0	0	0	0
W-2		M10	57,455	6200	0	0	0	0
W-2		M11	3,114	0	0	0	0	0
W-2		MC03	98,714	18000	0	0	0	0
W-2		SDN1-OFF	145,844	14000	0	0	0	0
NP-8	1st Ave S from SW Normandy Road to 186th Ave SW	M21A	209,787	770	24000	0	0	0
B-44	4th Ave S from S 168th St to S 165th St	M16	90,686	2000	2400	0	0	0
B-44		M19	4,911	0	0	0	0	0
B-38	4th Ave SW from SW 153rd St to SW 160th St	M11	30,765	0	2640	0	0	0
B-38		M12	73,733	150	4200	0	0	0
NP-11	SW Suburban Sewer District Treatment Plant	M17	6,445	0	6445	0	0	0

Simulation of Retrofit Projects in HSPF Model

Each project will be designed to provide stormwater treatment (water quality and quantity) to the greatest extent feasible given the constraints of each site. Thus, the performance of each facility will vary depending on the facility size and the tributary area.

A simplified approach was used to represent each of the retrofit projects in the HSPF hydrologic model. One of eight designs listed in Table 2 were selected for each project based on the ratio of the infiltration area to runoff tributary area and the potential soil infiltration rate. The infiltration area was computed as the sum of the bioretention, infiltration gallery, and Sylva Cell infiltration areas for each project in each subbasin (pervious pavement and cisterns were addressed in a procedure described below). This approach recognizes that the performance of each facility varies depending on the size of the facility and the area draining to it. One of two Infiltration rates (2 inches per hour (in/hr) or 6 in/hr) was selected for each facility based on shallow and deep infiltration mapping by Aspect Consulting (Aspect Consulting, 2014). Shallow and deep infiltration feasibility were defined by Aspect as follows:

- *Shallow Infiltration Feasibility: The lower-lying portions of the study area with recessional outwash soils were considered to have good or moderate feasibility for shallow infiltration.*
- *Deep Infiltration Feasibility: Deep infiltration may be feasible in a significant portion of the basin, including many of the higher elevation areas covered with glacial till that are unsuitable for shallow infiltration.*

Table 2 - Combined Bioretention, Infiltration Gallery, and Silva Cells HSPF Designs One of Used to Represent Each of the 30 Proposed Retrofit Projects

Hydraulic Routing Reach Number	Design Performance	Design Infiltration Rate
1	Infiltrate All Runoff up to 1.25 Year Recurrence Interval	2 in/hr
2	Infiltrate All Runoff up to 2 Year Recurrence Interval	2 in/hr
3	Infiltrate All Runoff to 10 Year Recurrence Interval	2 in/hr
4	Infiltrate All Runoff in Simulation Period	2 in/hr
5	Infiltrate All Runoff up to 1.25 Year Recurrence Interval	6 in/hr
6	Infiltrate All Runoff up to 2 Year Recurrence Interval	6 in/hr
7	Infiltrate All Runoff to 10 Year Recurrence Interval	6 in/hr
8	Infiltrate All Runoff in Simulation Period	6 in/hr

The MGSFlood hydrologic model (MGS Engineering Consultants, 2014) was used to develop the hydraulic rating table for each facility listed in Table 2. Each facility was designed for a tributary area of 1 acre. In the HSPF model, the outflow from the facility assigned to each project was scaled by the actual tributary area (in acres) to obtain the total discharge. This approach is efficient because it allows for the simulation of a large number of projects (in this case 30) with only eight hydraulic routing reaches. The design parameters used to develop the eight routing reaches in Table 2 are shown in Table 3.

Table 3 - Bioretention Parameters used to Design Hydraulic Routing Reaches That Represent the Combined Hydraulics of Bioretention, Infiltration Gallery, and Silva Cells

Parameter	Value
Side Slopes	3:H to 1:V
Ponding Depth to Overflow	1 foot
Bottom Area	Varied to produce Desired Infiltration Performance
Biosoil Depth	1 foot
Biosoil Infiltration Rate	6 in/hr
Biosoil Porosity	30-percent
Native Soil Infiltration Rate	2 in/hr or 6 in/hr (Separate facilities were designed for each rate)

The criteria for assigning one of the eight designs in Table 2 to each of the 30 proposed projects are listed in Table 4. The ratio of the sum of bioretention, infiltration gallery, and Silva Cell infiltration area to the tributary area was computed for each project. The ratio in Table 4 that was closest to that computed for a particular project defined the reach performance standard and the appropriate routing reach. This approach recognizes that projects with larger treatment facilities and relatively small tributary area will perform better than smaller treatment facilities with larger tributary areas. An example showing the application of this approach is described later in this report.

The infiltration to tributary area ratios in Table 4 were determined through modeling with MGSFlood. This was accomplished using a bioretention facility and varying the footprint to produce overflows for a range of recurrence intervals (1.25-year, 2-year, 10-year, and no overflow).

Table 4 – Criteria for Selecting Performance Standard Based for Each Facility Based on the Ratio of Infiltration Area to Tributary Area and Site Infiltration Rate (2 in/hr and 6 in/hr)

Ratio of Sum of Bioretention, Infiltration Gallery and Silva Cell Infiltration Area to Tributary Area Criteria		Reach Performance Standard
Infiltration Rate 2 in/hr	Infiltration Rate 6 in/hr	
0.013	0.0069	Infiltrate to 1.25 Year Recurrence Interval
0.016	0.0087	Infiltrate to 2 Year Recurrence Interval
0.029	0.013	Infiltrate to 10 Year Recurrence Interval
0.055	0.028	Infiltrate All Runoff

Permeable pavement and downspout disconnections were represented in one of two ways depending on whether they were used in conjunction with infiltration GSI (bioretention, Infiltration gallery, and/or Sylva Cells). If permeable pavement and/or downspouts were located upstream of an infiltration GSI, then the impervious surface upstream of the infiltration GSI was reduced by an area equal to the permeable pavement plus area of downspout disconnect. This recognizes that permeable pavement and downspout disconnects located upstream of an infiltration facility would have the effect of increasing the performance of the infiltration facility.

If permeable pavement and/or downspouts were not upstream of an infiltration GSI, then the area tributary to the permeable pavement was routed to a separate hydraulic routing reach that represents the cistern and/or permeable pavement. Sensitivity Runs with MGSFlood showed that all runoff would be infiltrated even when the ratio of the permeable pavement

area to the tributary areas is as small as 10-percent (for both design infiltration rates used in the model). When the ratio drops to 5-percent, then the 2 in/hr rate only infiltrates to about a 5-year recurrence interval before overflowing (the 6 in/hr rate still infiltrated all runoff). There are no proposed projects where the 2 in/hr infiltration rate has a permeable pavement to tributary ratio less than 10-percent. Therefore, only one hydraulic reach that infiltrates all runoff was used to simulate the effects of cisterns and/or permeable pavement where they are not used in conjunction with other infiltration BMPs. Design parameters for the cistern/permeable pavement reach for projects without other infiltration BMPs are listed in Table 5.

Table 5 –Parameters used to Design Reaches Representing the Hydraulics of Cisterns and/or Permeable Pavement. Designed to Infiltrate 1 acre of tributary area

Parameter	Value
Permeable Pavement Infiltration Rate	20 in/hr
Permeable Pavement Area	10,890 sf
Gravel Subgrade Area	10,890 sf
Gravel Subgrade Depth	1 foot
Gravel Subgrade Porosity	30-percent
Gravel Infiltration Rate	6 in/hr
Native Soil Infiltration Rate	6 in/hr

Example Application of Modeling Approach

An example application of the model approach described in the previous sections is shown below for Project B-20. Table 6 shows the tributary area and infiltration areas for the project (Taken from Table 1).

Table 6 – Example Data for Project B-20 from Table 1
Tributary Area and Infiltration Area

Tributary Area (sf)	**165,709 sf**
Bioretention Infiltration Area	5,400 sf
Permeable Pavement Infiltration Area	31,352 sf
Infiltration Gallery Infiltration Area	0 sf
Silva Cell Infiltration Area	0 sf
Roof Cistern to Infiltration Area	0 sf

Permeable pavement is located upstream of the bioretention area and is subtracted from the tributary area. The resulting infiltration area to tributary area ratio is:

$$\text{Ratio}=5{,}400/(165{,}709-31{,}352) = \underline{0.040}$$

The project is located in an area with a 6 in/hr infiltration rate. From Table 4, 0.040 is greater than the ratio required to infiltrate all runoff for the 6 in/hr infiltration rate (0.028). Thus, hydraulic reach Number 8 from Table 2 will be used to represent the GSI for this project. In the HSPF model, the outflow from the reach will be scaled by the tributary area in acres (165,709/43,560) = 3.804. The remaining subbasin will be reduced by the area of pervious and impervious tributary to the GSI facility, 3.804 acres in this case.

Groundwater Return Flow

Infiltration of stormwater runoff via GSI facilities increases the amount of recharge to shallow and deep groundwater. The additional recharge would likely increase baseflow in nearby streams. The additional baseflow in receiving streams was accounted for in the HSPF model using an additional routing reach that represents the routing of infiltrated water through shallow groundwater. The water infiltrated from each GSI facility was captured by a second routing reach with routing characteristics similar to a groundwater response. 75-percent of the infiltrated water was returned to the receiving creek in the same subbasin via the groundwater routing reach with 25-percent assumed lost to deep groundwater (not tributary to the stream). The hydraulic response from the groundwater reach was simulated using the HSPF interflow outflow algorithm. This was chosen because it represents a shallow groundwater response, is relatively simple, and the response can be easily adjusted using a single parameter (IRC). An IRC value of 0.995 was used and provides a reasonable groundwater lag for the return of infiltrated water to the stream.

Simulation Results

The HSPF model was used to develop flood-frequency statistics and mean daily discharge values at the outlet of each model subbasin. Precipitation from the Sea-Tac gage and daily evaporation derived from the Puyallup 2 West Experimental Station (station number 45-6803) for the period of 1948-2011 were used as input to the model to compute a 63-year time series of flow.

The Benthic Index of Biotic Integrity (B-IBI) was developed as an index to quantify the ecological condition of streams in the Pacific Northwest. B-IBI scores range between 10 and 50, with higher scores representing more pristine conditions. B-IBI scores have been assigned qualitative descriptions of stream condition by Karr el al., 1999 (Table 7).

Table 7 – Qualitative Categorization of B-IBI (Karr et al. 1986)

Condition	Description	B-IBI Range
Excellent	Comparable to least disturbed reference condition; overall high taxa diversity, particularly of mayflies, stoneflies, caddis flies, long-lived, clinger, and intolerant taxa. Relative abundance of predators high.	46-50
Good	Slightly divergent from least disturbed condition; absence of some long-lived and intolerant taxa; slight decline in richness of mayflies, stoneflies, and caddis flies; proportion of tolerant taxa increases.	38-45
Fair	Total taxa richness reduced – particularly intolerant, long-lived, stonefly, and clinger taxa; relative abundance of predators declines; proportion of tolerant taxa continues to increase.	28-37
Poor	Overall taxa diversity depressed; proportion of predators greatly reduced as is long-lived taxa richness; few stoneflies or intolerant taxa present; dominance by three most abundant taxa often very high.	18-27
Very Poor	Overall taxa diversity very low and dominated by a few highly tolerant taxa; mayfly, stonefly, caddis fly, clinger, long-lived, and intolerant taxa largely absent; relative abundance of predators very low.	10-17

B-IBI scores have been related to several hydrologic metrics that quantify the impacts to streamflow from urbanization by DeGasperi et al. (2009) and Horner (2013). The regression equations developed by Horner (2013), summarized in Table 8, were used to estimate B-IBI values using High Pulse Count (HPC) and High Pulse Range (HPR) values computed with the

HSPF model for existing conditions and existing conditions with the 30 proposed retrofit projects. B-IBI values obtained from the HPC and HPR regression equations were averaged to estimate potential B-IBI values at the outlet of each subbasin assuming that flow flashiness represented by HPC and HPR are the only factor limiting B-IBI scores. The results for best estimate and the upper 90-percent confidence bound are presented in the appendix (Tables A1a, A1b, and A2a, A2b) for existing and existing with proposed projects, respectively.

Table 8 - Regression Equations and Associated Statistics Relating High Pulse Count (HPC) and High Pulse Range (HPR) with Benthic Index of Biotic Integrity Used to Estimate B-IBI Scores (Reproduced from Horner, 2013)

STATISTIC			HIGH PULSE COUNT (HPC)	HIGH PULSE RANGE (HPR)
Equation			Ln (% Max. B-IBI Score) = - 0.066*HPC + 4.50[a] (Equation 1)	Ln (% Max. B-IBI Score) = - 0.005*HPR + 4.69[a] (Equation 2)
R^{2*}			0.745	0.755
Confidence limits (lower, upper)	90%	Coefficient	(-)0.084, (-)0.048	(-)0.007, (-)0.004
		Constant	4.29, 4.71	4.44, 4.95
	80%	Coefficient	(-)0.080, (-)0.052	(-)0.006, (-)0.004
		Constant	4.34, 4.66	4.50, 4.89
	60%	Coefficient	(-)0.075, (-)0.057	(-)0.006, (-)0.004
		Constant	4.39, 4.60	4.57, 4.82

[a] Ln signifies the natural logarithm.
* R^2 represents the fraction of variability in a data set explained by the statistical model. Both regressions are significant at $P < 0.001$.

King County staff requested that the B-IBI values computed using the upper 90-percent confidence bound be used in evaluating the performance of stormwater retrofit projects to represent the maximum potential change in B-IBI scores. Table A3 in the appendix compares the B-IBI values for existing conditions and existing conditions with the 30 retrofit projects for the upper 90-percent confidence bound. Results show that with the proposed 30 retrofit projects, the B-IBI scores increased from 0 to 2, which represents a percentage increase from zero to 11-percent depending on the location in the watersheds. The majority of subcatchments remained in the “Poor” and “Very Poor” ranking with the 30 retrofit projects. This does not mean that the proposed projects have no benefit to the system, as discussed further below in regards to potential peak flow reductions expected from the retrofits. It merely shows that the hydrology must be aggressively altered to effect any meaningful change in the B-IBI score based on the regression model.

Table A4 compares the peak 2-year discharge at each subbasin outlet for existing conditions and existing conditions with the 30 retrofit projects. Peak flow reductions ranging from a couple of percent to 8-percent are seen at many subbasins. The largest flow reductions of 27-percent and 10-percent were noted for Subbasins M10 and M11, respectively. These subbasins are

highly urbanized and the proposed projects address a significant portion of runoff from development with undersized stormwater controls.

Estimating B-IBI Improvement for Second Tier Projects

Eighty stormwater retrofit projects were identified and prioritized as part of this analysis. The effectiveness of the top 30 ranked projects was simulated using the HSPF watershed model as discussed in the previous sections. This section describes the development of a spreadsheet screening tool to aid in the evaluation of the remaining 50 (second tier) projects.

The spreadsheet screening tool was developed with the HSPF model used to evaluate the hydrologic performance of top 30 ranked projects. Six hypothetical 1-acre urban sites were simulated with the model and a relationship between fraction of site area mitigated and B-IBI score was developed. The land use of each site consisted of 60-percent impervious and 40-percent urban grass and the geology was assumed to be glacial till. The fraction of the site mitigated ranged from 0- to 100-percent. An additional 100-percent forested site was included to provide an indication of the upper limit of the B-IBI score achievable. GSI mitigation for each site consisted of a bioretention facility designed to infiltrate all inflows during the simulation period. A portion of the water infiltrated by the facility (75-percent) was returned to the receiving stream after routing through a reach that mimics a shallow groundwater response. Design parameters used for the bioretention facilities are shown in Table 9.

Table 9 - Bioretention Design Parameters Used to Develop Relationship between Fraction of Site Mitigated and Resulting B-IBI Score

Parameter	Value
Side Slopes	3:H to 1:V
Ponding Depth to Overflow	1 foot
Bottom Area	Varies with each site
Biosoil Depth	1 foot
Biosoil Infiltration Rate	6 in/hr
Biosoil Porosity	30-percent
Native Soil Infiltration Rate	6 in/hr

Table 10 shows the predicted B-IBI score for each of the seven sites simulated. The B-IBI scores were estimated using the equations in Table 8 for the upper 90-percent confidence bound. The values in Table 10 were used to develop a regression relationship between predicted B-IBI score and fraction of site retrofitted with GSI facilities (Figure 2). The B-IBI prediction equation uses the fraction of the watershed retrofit with GSI entered as a decimal (x value) to predict the B-IBI score (y value). Using this relationship, an estimate of the potential change in B-IBI score for each project could be made using the fraction of the total subbasin area that would be treated by the project as input.

Table 10 – Predicted B-IBI Scores for Each Site Simulated Used to Develop Relationship between Fraction of Site Mitigated and Resulting B-IBI Score

Test Site	Fraction of Site Mitigated by GSI	Predicted B-IBI Score
1. Urban	0.00	15
2. Urban	0.10	16
3. Urban	0.25	16
4. Urban	0.50	19
5. Urban	0.75	24
6. Urban	1.00	40
7. Forest	N/A	43

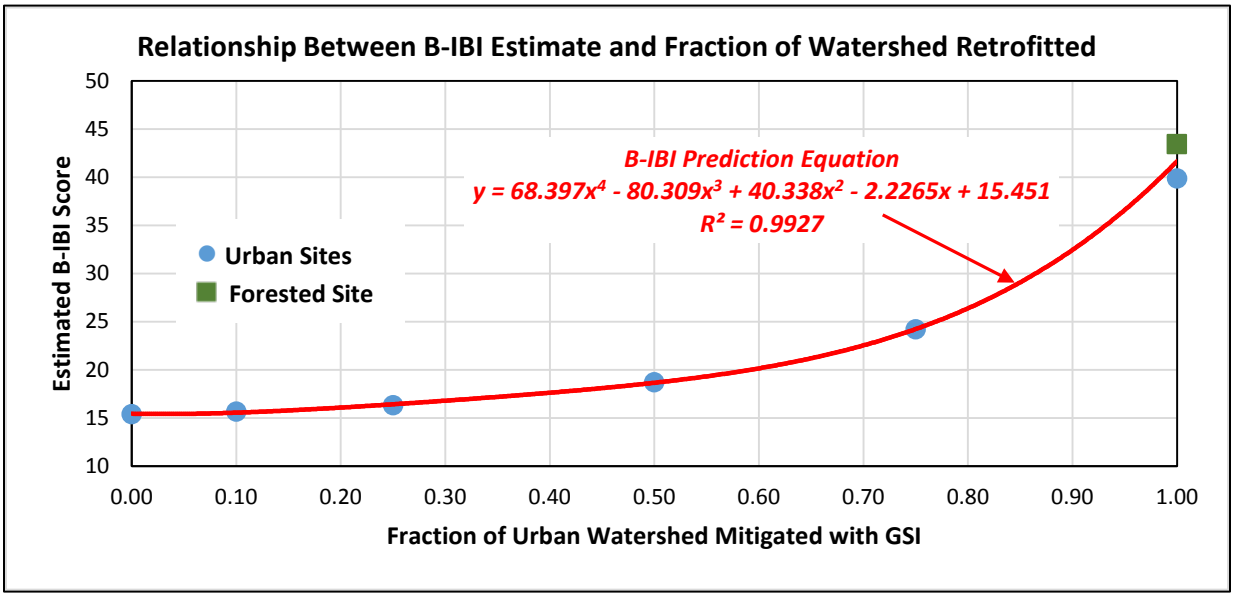

Figure 2 – Relationship Between Predicted B-IBI Score and Fraction of Watershed Retrofit with GSI

An example application of the regression equation is as follows. A GSI project is proposed for a subbasin that currently has 50-percent of the urban area mitigated with GSI. Using the B-IBI prediction equation in Figure 2, the estimated B-IBI score for current conditions would be 18.7. With the proposed project, the subbasin would have 60-percent of the total area mitigated with GSI and the predicted B-IBI score would be 20.2 or a 1.5 point increase in B-IBI score.

Figure 2 shows that the B-IBI prediction line is relatively flat until the amount of the watershed retrofit reaches about 60-percent where the rate of change increases. This means that for highly urban basins with little stormwater controls, it will take a substantial amount of GSI retrofit before a significant increase in the B-IBI scores would be expected. The reason for this is the high pulse count and high pulse range statistics are dominated by the uncontrolled runoff from unmitigated areas. This agrees with the seemingly low predicted B-IBI increases noted earlier for the proposed top 30 projects in the Miller/Walker basin, which is highly urban and has relatively few GSI facilities.

REFERENCES

1. Kindred, J. Scott and McCormack, David H., Aspect Consulting, LLC, Infiltration Feasibility Assessment Miller-Walker Basin Stormwater Retrofit Planning, King County Washington, July 17, 2014.

2. Barker, B., MGS Engineering Consultants, Inc., Hydrologic Analysis of Miller and Walker Creek Watersheds to Identify Watershed-Specific Stormwater Treatment Standards, Prepared for the Washington State Department of Transportation, February 12, 2009.

3. Barker, B., MGS Engineering Consultants, Inc., Hydrologic and BIBI Analysis of the Miller and Walker Creek Watersheds, Prepared for the Washington State Department of Transportation, October 9, 2013.

4. DeGasperi, C.L., H.B. Berge, K. R. Whiting, J.J. Burkey, J.L. Cassin, and R.R. Fuerstenberg. Linking Hydrologic Alteration to Biological Impairment in Urbanizing Streams of the Puget Lowland, Washington, USA. Journal of the American Water Resources Association 45(2):512-533, 2009.

5. Geo Engineers and MGS Engineering Consultants, Inc., Geomorphic and Hydraulic Analysis Miller and Walker Creeks, Normandy Park, Washington, Prepared for the Washington State Department of Transportation, May 16, 2008.

6. Horner, R.R. 2013, Development of a Stormwater Retrofit Plan for Water Resources Inventory Area 9: Flow and Water Quality Indicators and Targets. King County Water and Land Resources Division, Seattle, Washington.

7. Karr, J. R., and W. Chu, Sampling Protocol for the Benthic Index of Biotic Integrity (B-IBI). Restoring Life in Running Waters: Better Biological Monitoring. Island Press, Washington DC, 1999.

8. King County Department of Natural Resources, Miller and Walker Creeks Basin Plan, Executive Proposed- February 2006.

9. Parametrix, Inc., Comprehensive Stormwater Management Plan, Master Plan Update Improvements, Seattle-Tacoma International Airport, December 2000, Updated July 2001.

10. MGS Engineering Consultants Inc., MGSFlood, A Continuous Hydrological Simulation Model for Stormwater Facility Analysis for Western Washington, Version 4.34, March 2014.

APPENDIX A – SIMULATION RESULTS, EXISTING CONDITIONS AND WITH PROPOSED 30 TOP RANKED RETROFIT PROJECTS

Table A1a, B-IBI Estimates from Horner (2013) Regression Equation
Existing Conditions (Best-Estimate)

Subbasin	High Pulse Count (HPC) (Average No High Pulses/Year)	High Pulse Range (HPR) Average High Pulse Range/Year (days)	B-IBI Regression Results (Best Estimate)		
			Regression with HPC	Regression with HPR	Average B-IBI
SUBBASIN M01	23.8	310	10.0	11.5	10.8
SUBBASIN M02	24.2	312	10.0	11.4	10.7
SUBBASIN M02A	18.5	278	13.2	13.6	13.4
SUBBASIN M03	24.5	312	10.0	11.5	10.7
SUBBASIN M03A	25.9	326	10.0	10.7	10.3
SUBBASIN M04	28.0	331	10.0	10.4	10.2
SUBBASIN M04A	23.7	315	10.0	11.2	10.6
SUBBASIN M05	25.1	322	10.0	10.9	10.4
SUBBASIN M08	29.7	331	10.0	10.4	10.2
SUBBASIN M09	31.6	335	10.0	10.2	10.1
SUBBASIN M10	27.2	322	10.0	10.9	10.4
SUBBASIN M11	28.4	327	10.0	10.6	10.3
SUBBASIN M12	17.3	259	14.3	14.9	14.6
SUBBASIN M13	12.8	181	19.3	22.0	20.6
SUBBASIN M14	16.7	270	14.9	14.1	14.5
SUBBASIN M15	21.1	301	11.2	12.1	11.6
SUBBASIN M16	21.0	299	11.2	12.2	11.7
SUBBASIN M17	20.7	301	11.4	12.1	11.8
SUBBASIN M23	1.4	79	41.1	36.6	38.9
SUBBASIN M23A	11.8	267	20.6	14.3	17.5
SUBBASIN M23B	27.9	330	10.0	10.4	10.2
SUBBASIN M24	25.3	307	10.0	11.7	10.9
SUBBASIN MC02	18.6	304	13.2	11.9	12.5
SUBBASIN MC03	22.6	309	10.1	11.6	10.9
SUBBASIN MC04	21.5	303	10.9	12.0	11.4
SUBBASIN MC05	20.9	297	11.3	12.3	11.8
SUBBASIN M18	18.7	19	18.0	18.1	18.0
SUBBASIN M19	18.2	18	17.4	17.5	17.4
SUBBASIN M20	21.0	23	21.0	22.0	21.5
SUBBASIN M21	11.1	7	10.0	11.0	10.5
SUBBASIN M21A	14.1	10	12.2	12.5	12.3
SUBBASIN M22	17.5	17	16.5	16.6	16.6

Table A1b, B-IBI Estimates from Horner (2013) Regression Equation
Existing Conditions (Upper 90% Confidence Bound)

Subbasin	High Pulse Count (HPC) (Average No High Pulses/Year)	High Pulse Range (HPR) Average High Pulse Range/Year (days)	B-IBI Regression Results (Upper 90% Confidence Bound)		
			Regression with HPC	Regression with HPR	Average B-IBI
SUBBASIN M01	23.8	310	17.7	20.4	19.1
SUBBASIN M02	24.2	312	17.4	20.3	18.8
SUBBASIN M02A	18.5	278	22.8	23.2	23.0
SUBBASIN M03	24.5	312	17.1	20.3	18.7
SUBBASIN M03A	25.9	326	16.0	19.2	17.6
SUBBASIN M04	28.0	331	14.5	18.8	16.7
SUBBASIN M04A	23.7	315	17.8	20.0	18.9
SUBBASIN M05	25.1	322	16.6	19.5	18.0
SUBBASIN M08	29.7	331	13.4	18.8	16.1
SUBBASIN M09	31.6	335	12.2	18.5	15.3
SUBBASIN M10	27.2	322	15.1	19.5	17.3
SUBBASIN M11	28.4	327	14.2	19.1	16.6
SUBBASIN M12	17.3	259	24.1	25.1	24.6
SUBBASIN M13	12.8	181	30.0	34.2	32.1
SUBBASIN M14	16.7	270	24.9	24.0	24.4
SUBBASIN M15	21.1	301	20.2	21.2	20.7
SUBBASIN M16	21.0	299	20.2	21.4	20.8
SUBBASIN M17	20.7	301	20.5	21.2	20.9
SUBBASIN M23	1.4	79	50.0	50.0	50.0
SUBBASIN M23A	11.8	267	31.5	24.2	27.9
SUBBASIN M23B	27.9	330	14.6	18.8	16.7
SUBBASIN M24	25.3	307	16.5	20.7	18.6
SUBBASIN MC02	18.6	304	22.8	20.9	21.8
SUBBASIN MC03	22.6	309	18.8	20.5	19.6
SUBBASIN MC04	21.5	303	19.8	21.0	20.4
SUBBASIN MC05	20.9	297	20.4	21.5	20.9
SUBBASIN M18	18.7	19	28.5	29.2	28.9
SUBBASIN M19	18.2	18	27.8	28.5	28.1
SUBBASIN M20	21.0	23	31.9	34.2	33.0
SUBBASIN M21	11.1	7	16.9	19.6	18.3
SUBBASIN M21A	14.1	10	21.5	21.7	21.6
SUBBASIN M22	17.5	17	26.8	27.3	27.1

Table A2a, B-IBI Estimates from Horner (2013) Regression Equation
Existing Conditions with 30 Retrofit Projects (Best-Estimate)

Subbasin	High Pulse Count (HPC) (Average No High Pulses/Year)	High Pulse Range (HPR) Average High Pulse Range/Year (days)	B-IBI Regression Results (Best Estimate)		
			Regression with HPC	Regression with HPR	Average B-IBI
SUBBASIN M01	23.4	309	10.0	11.6	10.8
SUBBASIN M02	23.7	312	10.0	11.4	10.7
SUBBASIN M02A	18.5	278	13.2	13.6	13.4
SUBBASIN M03	23.9	309	10.0	11.6	10.8
SUBBASIN M03A	25.9	326	10.0	10.7	10.3
SUBBASIN M04	27.2	328	10.0	10.5	10.3
SUBBASIN M04A	23.4	313	10.0	11.4	10.7
SUBBASIN M05	24.8	320	10.0	11.0	10.5
SUBBASIN M08	29.7	331	10.0	10.4	10.2
SUBBASIN M09	31.6	335	10.0	10.2	10.1
SUBBASIN M10	23.9	305	10.0	11.8	10.9
SUBBASIN M11	27.0	322	10.0	10.9	10.4
SUBBASIN M12	16.8	252	14.9	15.4	15.1
SUBBASIN M13	12.9	181	19.3	22.0	20.6
SUBBASIN M14	16.2	264	15.5	14.6	15.0
SUBBASIN M15	20.0	294	12.0	12.5	12.3
SUBBASIN M16	20.1	294	11.9	12.5	12.2
SUBBASIN M17	19.7	289	12.3	12.8	12.6
SUBBASIN M23	1.4	79	41.1	36.6	38.9
SUBBASIN M23A	11.8	267	20.6	14.3	17.5
SUBBASIN M23B	27.9	330	10.0	10.4	10.2
SUBBASIN M24	24.5	304	8.9	11.9	11.0
SUBBASIN MC02	18.5	303	13.3	12.0	12.6
SUBBASIN MC03	22.1	306	10.5	11.8	11.1
SUBBASIN MC04	20.8	297	11.4	12.3	11.9
SUBBASIN MC05	20.5	296	11.7	12.4	12.0
SUBBASIN M18	13.3	216	18.7	18.4	18.6
SUBBASIN M19	14.0	220	17.9	18.1	18.0
SUBBASIN M20	10.7	178	22.1	22.3	22.2
SUBBASIN M21	24.3	318	10.0	11.1	10.6
SUBBASIN M21A	19.2	290	12.7	12.8	12.7
SUBBASIN M22	14.7	232	17.1	17.1	17.1

Table A2b, B-IBI Estimates from Horner (2013) Regression Equation
Existing Conditions with 30 Retrofit Projects (Upper 90% Confidence Bound)

Subbasin	High Pulse Count (HPC) (Average No High Pulses/Year)	High Pulse Range (HPR) Average High Pulse Range/Year (days)	B-IBI Regression Results (Upper 90% Confidence Bound)		
			Regression with HPC	Regression with HPR	Average B-IBI
SUBBASIN M01	23.4	309	18.1	20.5	19.3
SUBBASIN M02	23.7	312	17.8	20.3	19.0
SUBBASIN M02A	18.5	278	22.8	23.2	23.0
SUBBASIN M03	23.9	309	17.6	20.5	19.0
SUBBASIN M03A	25.9	326	16.0	19.2	17.6
SUBBASIN M04	27.2	328	15.0	19.0	17.0
SUBBASIN M04A	23.4	313	18.1	20.2	19.1
SUBBASIN M05	24.8	320	16.9	19.7	18.3
SUBBASIN M08	29.7	331	13.4	18.8	16.1
SUBBASIN M09	31.6	335	12.2	18.5	15.3
SUBBASIN M10	23.9	305	17.6	20.8	19.2
SUBBASIN M11	27.0	322	15.2	19.5	17.3
SUBBASIN M12	16.8	252	24.8	25.7	25.3
SUBBASIN M13	12.9	181	30.0	34.2	32.1
SUBBASIN M14	16.2	264	25.5	24.6	25.1
SUBBASIN M15	20.0	294	21.3	21.8	21.5
SUBBASIN M16	20.1	294	21.1	21.8	21.5
SUBBASIN M17	19.7	289	21.6	22.2	21.9
SUBBASIN M23	1.4	79	50.0	50.0	50.0
SUBBASIN M23A	11.8	267	31.5	24.2	27.9
SUBBASIN M23B	27.9	330	14.6	18.8	16.7
SUBBASIN M24	24.5	304	17.1	21.0	19.0
SUBBASIN MC02	18.5	303	22.8	21.0	21.9
SUBBASIN MC03	22.1	306	19.2	20.7	20.0
SUBBASIN MC04	20.8	297	20.4	21.5	21.0
SUBBASIN MC05	20.5	296	20.8	21.6	21.2
SUBBASIN M18	13.3	216	29.3	29.7	29.5
SUBBASIN M19	14.0	220	28.4	29.2	28.8
SUBBASIN M20	10.7	178	33.2	34.6	33.9
SUBBASIN M21	24.3	318	17.3	19.8	18.6
SUBBASIN M21A	19.2	290	22.1	22.1	22.1
SUBBASIN M22	14.7	232	27.5	27.9	27.7

Table A3, B-IBI Estimates from Horner (2013) Regression Equation
Existing Conditions and Existing Conditions with 30 Retrofit Projects (Upper 90% Confidence Bound)

Subbasin	B-IBI Regression Results (Upper 90% Confidence Bound)		Percent Increase
	Existing Conditions	Existing Conditions with 30 Retrofit Projects	
SUBBASIN M01	19.1	19.3	1%
SUBBASIN M02	18.8	19.0	1%
SUBBASIN M02A	23.0	23.0	0%
SUBBASIN M03	18.7	19.0	2%
SUBBASIN M03A	17.6	17.6	0%
SUBBASIN M04	16.7	17.0	2%
SUBBASIN M04A	18.9	19.1	1%
SUBBASIN M05	18.0	18.3	2%
SUBBASIN M08	16.1	16.1	0%
SUBBASIN M09	15.3	15.3	0%
SUBBASIN M10	17.3	19.2	11%
SUBBASIN M11	16.6	17.3	4%
SUBBASIN M12	24.6	25.3	3%
SUBBASIN M13	32.1	32.1	0%
SUBBASIN M14	24.4	25.1	3%
SUBBASIN M15	20.7	21.5	4%
SUBBASIN M16	20.8	21.5	3%
SUBBASIN M17	20.9	21.9	5%
SUBBASIN M23	50.0	50.0	0%
SUBBASIN M23A	27.9	27.9	0%
SUBBASIN M23B	16.7	16.7	0%
SUBBASIN M24	18.6	19.0	2%
SUBBASIN MC02	21.8	21.9	0%
SUBBASIN MC03	19.6	20.0	2%
SUBBASIN MC04	20.4	21.0	3%
SUBBASIN MC05	20.9	21.2	1%
SUBBASIN M18	28.9	29.5	2%
SUBBASIN M19	28.1	28.8	2%
SUBBASIN M20	33.0	33.9	3%
SUBBASIN M21	18.3	18.6	2%
SUBBASIN M21A	21.6	22.1	2%
SUBBASIN M22	27.1	27.7	2%

Table A4, Comparison of Peak 2-Year Discharge Rates
Existing Conditions and Existing Conditions with 30 Retrofit Projects

Subbasin	2-Year Peak Discharge Rate at Subbasin Outlet		Percent Decrease
	Existing Conditions	Existing Conditions with 30 Retrofit Projects	
SUBBASIN M01	18.1	16.7	8%
SUBBASIN M02	29.5	27.0	8%
SUBBASIN M02A	1.7	1.7	0%
SUBBASIN M03	68.6	64.4	6%
SUBBASIN M03A	3.3	3.3	1%
SUBBASIN M04	15.0	14.2	5%
SUBBASIN M04A	10.6	10.4	2%
SUBBASIN M05	17.0	16.6	3%
SUBBASIN M08	9.9	9.6	3%
SUBBASIN M09	7.4	7.4	0%
SUBBASIN M10	21.1	15.5	27%
SUBBASIN M11	42.8	38.4	10%
SUBBASIN M12	25.5	24.6	4%
SUBBASIN M13	7.2	7.1	2%
SUBBASIN M14	9.9	9.5	4%
SUBBASIN M15	155.3	143.3	8%
SUBBASIN M16	86.9	81.0	7%
SUBBASIN M17	166.3	154.0	7%
SUBBASIN M23	1.3	1.3	3%
SUBBASIN M23A	2.9	2.9	2%
SUBBASIN M23B	6.5	6.5	1%
SUBBASIN M24	25.7	24.2	6%
SUBBASIN MC02	11.3	11.3	0%
SUBBASIN MC03	61.9	60.9	2%
SUBBASIN MC04	65.2	63.7	2%
SUBBASIN MC05	68.4	66.8	2%
SUBBASIN M18	45.3	43.8	3%
SUBBASIN M19	34.6	33.5	3%
SUBBASIN M20	16.6	15.3	8%
SUBBASIN M21	6.9	6.5	6%
SUBBASIN M21A	19.5	19.0	3%
SUBBASIN M22	63.8	61.8	3%

Attachment F

Preliminary Soil Exploration Results

This page intentionally left blank.

Richard Martin Groundwater LLC

TECHNICAL MEMORANDUM

DATE: November 3, 2014

TO: Robin Kirschbaum, PE
HDR Engineering

FROM: Richard Martin, LHG
Richard Martin Groundwater LLC

RE: CITY OF BURIEN PRELIMINARY INFILTRATION FEASIBILITY

Richard Martin Groundwater LLC (RMGW) is pleased to present this technical memorandum summarizing the results of five subsurface explorations and grain size analysis of selected soil samples for proposed Site 24 – 12th Avenue SW between SW 148th Street and SW 152nd Street, Site 29 – Moshier Park, and Site 31 – Moshier Community Arts Center, all located in the City of Burien. These explorations and tests provide information regarding stratigraphy and hydrogeology, and provide a basis for evaluation of shallow infiltration feasibility at the sites. This information will be used to support conceptual design of the proposed stormwater retrofit as part of King County's Miller Walker Stormwater Retrofit project (Project).

The three sites that were evaluated are part of a larger group of five sites that were selected for pre-design evaluation. The five sites were determined as part of a study of the Miller Walker drainage basin and includes the findings of an infiltration feasibility assessment prepared by Aspect Consulting (2014). The Aspect report should be referenced for additional information on basin soil and groundwater conditions, and the feasibility criteria used to select the five sites.

Scope of Services

To further evaluate site specific soil conditions that may affect the potential for shallow infiltration, five vactor explorations were performed for the three sites, including two explorations at Sites 24 and 29, and one exploration at Site 31. During the vactor explorations, hand augering was completed ahead of the vactoring to collect soil samples for soil characterization. Three of the soil samples were selected for grain size analyses by a geotechnical laboratory. The observed soil conditions and results of the grain size analyses are summarized in this technical memorandum.

Subsurface Explorations

The subsurface explorations were conducted on October 24, 2014, by City of Burien (City) personnel using a city-owned vactor (vacuum excavation) truck and a high-pressure water jet to loosen the soil. RMGW recorded soil and groundwater conditions during excavation and collected soil samples using a hand auger at approximate 2-foot intervals. The locations of the explorations are shown on Figures 1 through 3 and the results are summarized in Table 1. Explorations V-1, V-2, V-3, and V-5 were excavated

to approximately10 feet below ground surface. Exploration V-4 was terminated at approximately 6.5 feet where groundwater was observed flowing into the vactor hole. Exploration ground surface elevations were estimated from Google Earth. As shown on Table 1, borings locations range in elevation from 299 to 368 feet. Logs of the vactor holes are shown on Figures 4 through 9.

Table 1 – Conditions Encountered in Subsurface Vactor Explorations

Location	Vactored Depth (feet)	Ground Elevation (feet)	Summary of Soil Conditions Observed During Vactoring	Soil Type	Relative Infiltration Potential
V-1	10	299	Slightly silty to silty fine sand to 10 feet	Alluvium	Moderate
V-2	10	300	Slightly silty to silty fine sand to 3.5 feet, peat to 10 feet	Peat	Low
V-3	10	306	Slightly silty to silty fine sand to 10 feet	Alluvium	Moderate
V-4	6	368	Fill to 2 feet, sandy silt to 5 feet, silty gravelly sand to 6 feet. Groundwater observed at approximately 6 feet.	Fill/Alluvium/ Outwash	NA*
V-5	9.8	349	Fill to 2 feet, silty sand to sandy silt to 9.8 feet	Fill/Outwash	Low to Medium

* NA = Not Applicable. Shallow groundwater was observed during vactoring and the location is not suitable for shallow infiltration

Grain Size Analyses

Selected soil samples were submitted to Phoenix Soil Research for grain size analyses in accordance with ASTM D422. The purpose of this testing was to document the range of textural compositions for the soil types observed in the borings. The soil laboratory reports are provided in Appendix A and the results are summarized in Table 2. Unified Soils Classification System designations in Table 2 were determined in general accordance with ASTM D-2487, *Standard Practice for Classification of Soils for Engineering Purposes (Unified Soil Classification System*).

Table 2: Grain Size Analyses Results

Exploration and Sample Number	Depth (ft)	% Gravel	% Sand	% Fines	USCS Class and Description
V-1, S-4	8.3-8.8	19.7	67.0	13.3	SM – Silty sand with gravel
V-1, S-5	10–10.5	22.8	55.3	21.9	SM – Silty sand with gravel
V-3, S-3	6.3–6.8	1.3	96.2	2.5	SP – Poorly graded sand

Notes: % - percentage determined by dry weight
USCS – Unified Soil Classification System designations as determined by ASTM D-422 and in general accordance with ASTM D-2487

Soil Conditions

Soil observed at Sites 29 and 31 consisted of Recent Alluvium and Peat. The Recent Alluvium consisted generally of fine sand with variable amounts of silt. Thin silt seams less than 0.5 inches thick were periodically observed. The Recent Alluvium is anticipated to have a medium to high infiltration rate. The Peat contained small percentages of silt and sand, and scattered woody debris. The Peat is anticipated to have a low infiltration rate.

At Site 24, the upper 2 feet (approximate) soil was observed as Artificial Fill consisting of varying percentages of silt, sand, and gravel, was possibly placed during grading of the road bed. Underlying the Fill was possible Alluvium at vactor boring V-4 consisting of a sandy silt with a high percentage of organic matter. Below the fill and alluvium was slightly silty, gravelly sand to sandy silt, which is likely Recessional Outwash. Because of the high silt content of the Outwash, the infiltration rate would likely be low to medium.

Groundwater

Groundwater seepage was not observed in the vactor borings with the exception of Boring V-4. Groundwater observed seeping into Boring V-4 at a depth of approximately 6 feet. The boring was left open for approximately 15 minutes and the groundwater level rose in the hole to about 4.5 feet below ground surface. Although groundwater was not observed in Boring V-5, the neighboring resident commented water often seeps into crawl space of the house during the winter, which may be indicative of the presence of shallow groundwater in the area.

Conclusions

Soil and groundwater conditions observed at Site 24 (Figure 3) indicate that shallow infiltration is not likely feasible along the proposed alignment. Shallow groundwater was observed in vactor boring V-4 and the generally silty nature of the soil in the upper 10 feet of the soil profile will likely result in low design infiltration rates and the potential for groundwater mounding below infiltration facilities.

At Site 29 (Figure 1), the vactor borings (V-1 and V-2) indicate very different soil conditions, with the sandy soil observed in V-1 conducive to shallow infiltration whereas the peat observed in V-2 will likely

result in low infiltration rates. Shallow infiltration will likely be effective in areas where the sandy alluvium is present.

At Site 31 (Figure 2), sandy soil observed in vactor boring V-3 was similar in nature to the soil observed in V-1 and will be amenable to shallow infiltration.

Recommendations

The recommendations provided in this memorandum are suitable for preliminary design. Once proposed facility locations are known, we recommend conducting site-specific infiltration assessments at proposed locations for stormwater facilities that include infiltration. Depending on their location, these assessments may include additional field explorations and/or infiltration testing.

At Site 29 (Moshier Park) explorations will be needed to delineate the areas of peat soils which are not conducive to shallow infiltration from the sandy alluvium that should be suitable for infiltration. We recommend completing Pilot Infiltration Tests (PITs) at both of the proposed infiltration galleries and performing borehole infiltration tests in the explorations used to delineate the extent of the peat and sand where sand is observed.

At Site 31 (Moshier Community Arts Center) additional explorations will be necessary to verify the extent of the sandy alluvium, and testing should be performed to estimate design infiltration rates. Borehole infiltration and PITs are both likely to be suitable testing methods.

As indicated in the conclusions section above, Site 24 (12th Avenue SW) soil and groundwater conditions are not suitable for shallow infiltration. We understand from Aspect Report (2014) that deeper outwash soil may be present below the alignment and deep infiltration may be feasible. Additional deep explorations and testing will necessary to evaluate if the soil and groundwater conditions are sufficient to meet the project requirements.

References

Aspect Consulting, 2014, Infiltration Feasibility Assessment, Miller-Walker Basin Stormwater Retrofit Planning, King County, Washington. Prepared for HDR Engineering.

Limitations

The opinions, conclusions, and recommendations provided in this report are based on observed soil conditions at the site, results of laboratory testing of the soil, previous reports for the project site, and the proposed infiltration facilities and structures provided by HDR Engineering. If there are changes to the proposed infiltration facilities and structures, additional testing and evaluation may be necessary.

The analyses and conclusions presented in this report were prepared in accordance with generally accepted professional hydrogeologic principles and practice in this area at this time. No other warranty, either express or implied, is made. The scope of services did not include any environmental assessment or evaluation regarding the presence or absence of wetlands or hazardous or toxic material in the soil, surface water, groundwater, or air, on or below or around the site.

This report was prepared solely for the use of HDR Engineering, King County, and the City of Burien preliminary evaluation of shallow infiltration feasibility at the proposed sites.

Attachments:

Table 1 – Conditions Encountered in Subsurface Vactor Explorations – page 2
Table 2 – Grain Size Analyses Results – page 3

Figure 1 – Site #29 – Moshier Park Proposed Plan and Vactor Explorations Locations
Figure 2 – Site #31 – Moshier Community Art Center Proposed Plan and Vactor Explorations Locations
Figure 3 – Site #24 – 12th Avenue SW Proposed Plan and Vactor Explorations Locations
Figure 4 – Vactor Log for V-1
Figure 5 – Vactor Log for V-2
Figure 6 – Vactor Log for V-3
Figure 7 – Vactor Log for V-4
Figure 8 – Vactor Log for V-5

Appendix A – Results of Grain Size Analyses

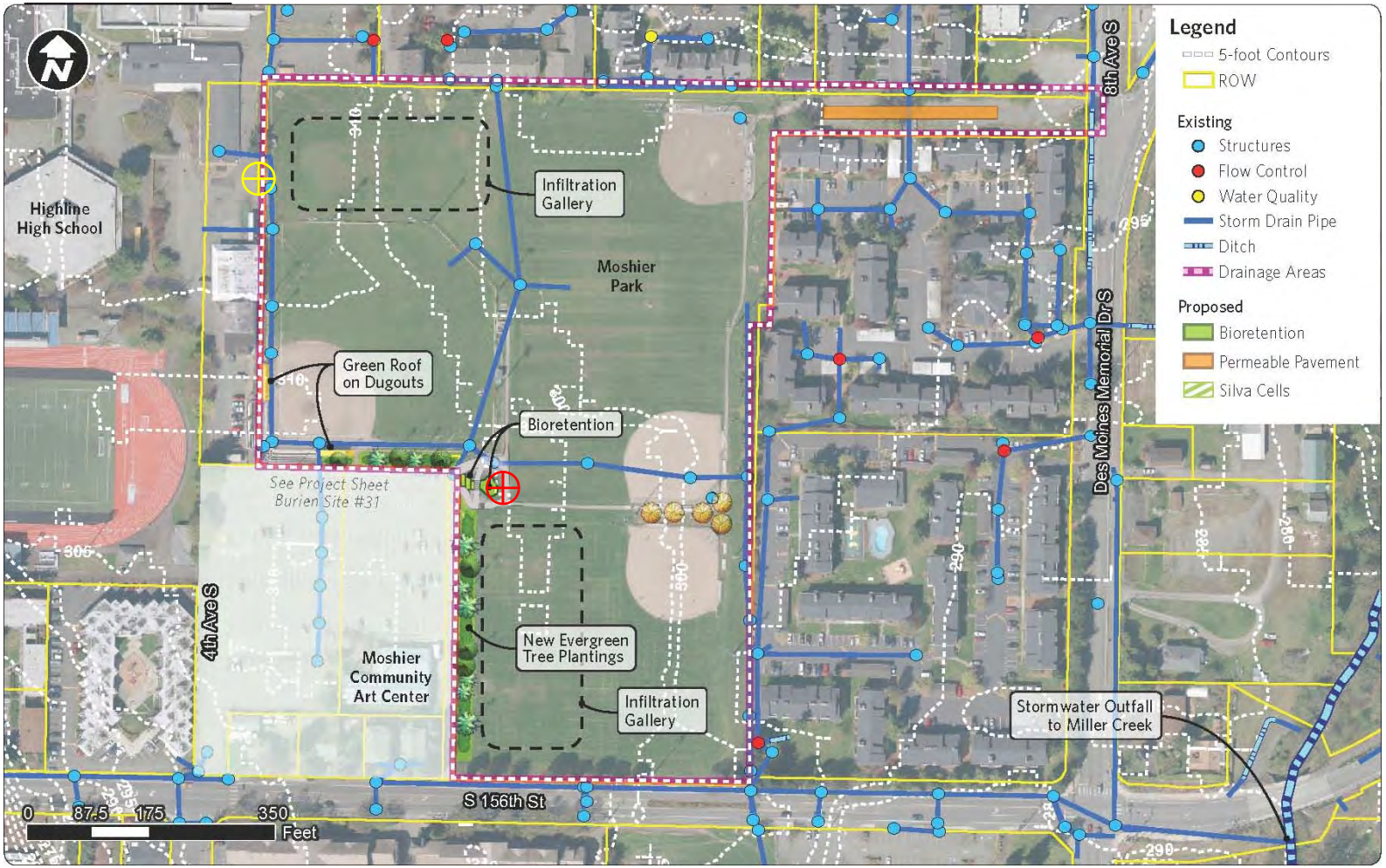

Figure adapted from HDR Engineering (B-29 Project Sheet.pdf)

Vactor Boring V-1

Vactor Boring V-2

FIGURE 1

SITE #29 - MOSHIER PARK PROPOSED PLAN AND VACTOR EXPLORATION LOCATIONS

Richard Martin Groundwater LLC

Miller Walker Retrofit - HDR
Burien, Washington

November 3, 2014

FIGURE 1

Figure adapted from HDR Engineering (B-31 Project Sheet.pdf)

⊕ Vactor boring V-3

FIGURE 2

SITE #31 - MOSHIER COMMUNITY ART CENTER PROPOSED PLAN AND VACTOR EXPLORATION LOCATIONS

Richard Martin Groundwater LLC	Miller Walker Retrofit - HDR Burien, Washington	November 3, 2014 **FIGURE 2**

Figure adapted from HDR Engineering (B-24 Project Sheet.pdf)

Vactor boring V-4

Vactor boring V-5

FIGURE 3

SITE #24 - 12TH AVENUE SW PROPOSED PLAN AND VACTOR EXPLORATION LOCATIONS

Richard Martin Groundwater LLC

Miller Walker Retrofit - HDR
Burien, Washington

June 24, 2013

FIGURE 3

Location: North side of Proposed South Infiltration Facility

Boring V-1

Ground Elevation: 299 feet (from Google Earth) **Logged by:** RJM

Driller: City of Burien **Drilling Method:** Vactor

Date Started/Ended: 10-24-2014 **Borehole Diameter:** NA **Vactored Depth:** 10 feet

Depth (feet)	Run/Percent Recovery	Sample Number	Graphic Log *	USCS	Soil Description	Well Completion	Depth to GW	Comments/ Remarks
0					Grass and top soil.		Not observed	
		HA-1		SP-SM	Tan, slightly silty to silty fine SAND; moist; trace clay. (**Recent Alluvium**)			
		HA-2						
5								
		HA-3			- Interbed of fine sandy SILT (1-2 mm)			
		HA-4		SP-SM	Tan to gray, slightly gravelly, slightly silty to silty fine SAND; moist; scattered interbeds of fine sandy SILT (1-2 mm) below 10 feet. (**Recent Alluvium**)			
10		HA-5						
15								
20								
25								
30								

* See key for graphic log explanation

HA-1 Hand auger interval and sample designation

Measured depth to groundwater (date and time)

Estimated groundwater level at time of drilling (ATD)

Well monument

Well riser pipe and concrete surface seal

Well riser pipe and bentonite chip seal

Well screen and filter pack

Well riser pipe and sand filter pack

Bentonite chips

SITE #29 - VACTOR LOG FOR V-1

Richard Martin Groundwater LLC

HDR Engineering
King County Miller Walker Retrofit
Burien, Washington

November 3, 2014

FIG. 4 (Sheet 1 of 1)

Location: West side of Proposed North Infiltration Facility

Boring V-2

Ground Elevation: 300 feet (from Google Earth) **Logged by:** RJM

Driller: City of Burien **Drilling Method:** Vactor

Date Started/Ended: 10-24-2014 **Borehole Diameter:** NA **Vactored Depth:** 10 feet

Depth (feet)	Run/Percent Recovery	Sample Number	Graphic Log *	USCS	Soil Description	Well Completion	Depth to GW	Comments/ Remarks
0					Grass and top soil.		Not observed	
		HA-1		SM	Dark brown, organic, silty fine SAND; moist; trace clay. (**Recent Alluvium**)			
5		HA-2		PT	Dark brown, slightly sandy PEAT; moist; scattered woody debris. (**Recent Peat**)			
		HA-3						
		HA-4						
10		HA-5						
15								
20								
25								
30								

* See key for graphic log explanation

HA-1 Hand auger interval and sample designation

Measured depth to groundwater (date and time)

Estimated groundwater level at time of drilling (ATD)

Well monument

Well riser pipe and concrete surface seal

Well riser pipe and bentonite chip seal

Well screen and filter pack

Well riser pipe and sand filter pack

Bentonite chips

SITE #29 - VACTOR LOG FOR V-2

Richard Martin Groundwater LLC

HDR Engineering
King County Miller Walker Retrofit
Burien, Washington

November 3, 2014

FIG. 5 (Sheet 1 of 1)

Location: Landscaped area on west side of Arts Center building

Boring V-3

Ground Elevation: 306 feet (from Google Earth) **Logged by:** RJM

Driller: City of Burien **Drilling Method:** Vactor

Date Started/Ended: 10-24-2014 **Borehole Diameter:** NA **Vactored Depth:** 10 feet

Depth (feet)	Run/Percent Recovery	Sample Number	Graphic Log *	USCS	Soil Description	Well Completion	Depth to GW	Comments/ Remarks
0					Grass and top soil.		Not observed	
		HA-1		SP-SM	Brown, slightly silty to silty fine SAND; moist; trace clay. (**Recent Alluvium**)			
5		HA-2						
		HA-3		SP	Tan, slightly silty fine SAND; moist. (**Recent Alluvium**)			
		HA-4						
10		HA-5		ML	Tan to gray, slightly sandy, clayey SILT; moist. (**Recent Alluvium**)			
15								
20								
25								
30								

* See key for graphic log explanation

HA-1 Hand auger interval and sample designation

Measured depth to groundwater (date and time)

Estimated groundwater level at time of drilling (ATD)

Well monument

Well riser pipe and concrete surface seal

Well riser pipe and bentonite chip seal

Well screen and filter pack

Well riser pipe and sand filter pack

Bentonite chips

SITE #31 - VACTOR LOG FOR V-3

Richard Martin Groundwater LLC

HDR Engineering
King County Miller Walker Retrofit
Burien, Washington

November 3, 2014

FIG. 6 (Sheet 1 of 1)

Location: 15 feet west of centerline of 12th and 90 feet south of center line of 148th

Ground Elevation: 368 feet (from Google Earth) **Logged by:** RJM

Boring V-4

Driller: City of Burien **Drilling Method:** Vactor

Date Started/Ended: 10-24-2014 **Borehole Diameter:** NA **Vactored Depth:** 6.5 feet

Depth (feet)	Run/Percent Recovery	Sample Number	Graphic Log *	USCS	Soil Description	Well Completion	Depth to GW	Comments/ Remarks
0					Silty, gravelly SAND with cobbles. (**Fill**)			
		HA-1		SM	Brown, slightly clayey, silty fine SAND; moist; abundant organics. (**Recent Alluvium**)			
		HA-2		ML	Brown, slightly sandy to sandy, organic SILT; wet. (**Recent Alluvium**)		▼	
5		HA-3		SM	Brown, gravelly, silty SAND; wet. (**Recessional Outwash**)			
					Bottom of Boring @ 6.5 Feet			
10								
15								
20								
25								
30								

* See key for graphic log explanation

☒ HA-1 Hand auger interval and sample designation

▼ Measured depth to groundwater (date and time)

▽ Estimated groundwater level at time of drilling (ATD)

Well monument

Well riser pipe and concrete surface seal

Well riser pipe and bentonite chip seal

Well screen and filter pack

Well riser pipe and sand filter pack

Bentonite chips

SITE #24 - VACTOR LOG FOR V-4

Richard Martin Groundwater LLC

HDR Engineering
King County Miller Walker Retrofit
Burien, Washington

November 3, 2014

FIG. 7 (Sheet 1 of 1)

Location: 13 feet east of centerline of 12th and 59 feet south of center line of 151st

Ground Elevation: 349 feet (from Google Earth) **Logged by:** RJM

Boring V-5

Driller: City of Burien **Drilling Method:** Vactor

Date Started/Ended: 10-24-2014 **Borehole Diameter:** NA **Vactored Depth:** 9.8 feet

Depth (feet)	Run/Percent Recovery	Sample Number	Graphic Log *	USCS	Soil Description	Well Completion	Depth to GW	Comments/ Remarks
0					Silty, gravelly SAND with cobbles. (**Fill**)		Not observed	
		HA-1, HA-2, HA-3		SM	Brown, slightly clayey, silty fine SAND; moist; scattered organics; increased silt content with depth. (**Recessional Outwash**)			
5								
		HA-4		SP-SM	Gray, slightly silty to silty fine SAND; moist;scattered gravel. (**Recessional Outwash**)			
10		HA-5		ML	Tan to gray, slightly gravelly, sandy SILT; moist. (**Recessional Outwash**)			
15								
20								
25								
30								

* See key for graphic log explanation

HA-1 Hand auger interval and sample designation

Measured depth to groundwater (date and time)

Estimated groundwater level at time of drilling (ATD)

Well monument

Well riser pipe and concrete surface seal

Well riser pipe and bentonite chip seal

Well screen and filter pack

Well riser pipe and sand filter pack

Bentonite chips

SITE #24 - VACTOR LOG FOR V-5

Richard Martin Groundwater LLC

HDR Engineering
King County Miller Walker Retrofit
Burien, Washington

November 3, 2014

FIG. 8 (Sheet 1 of 1)

APPENDIX A

Results of Grain Size Analyses

Particle Size Distribution Report

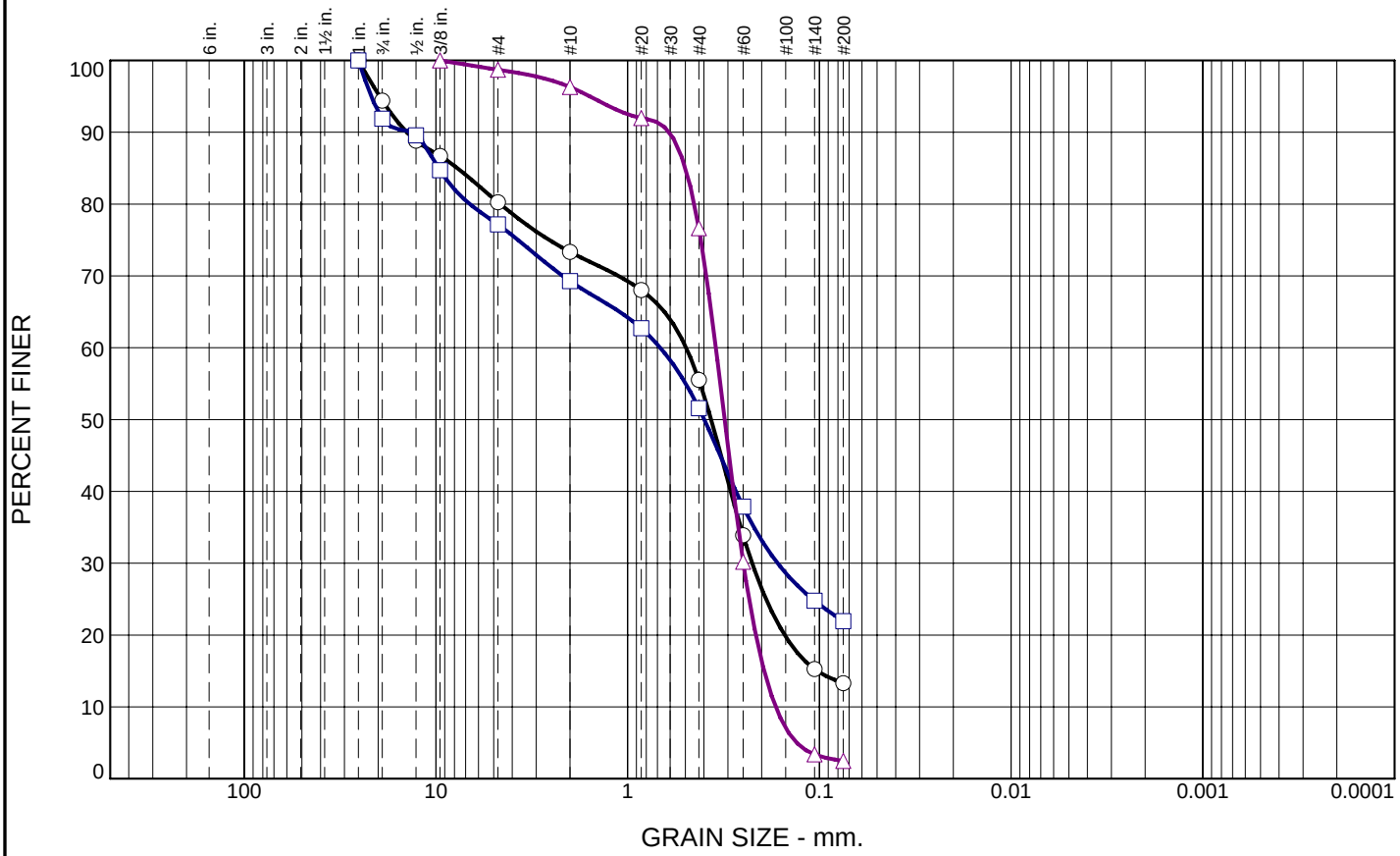

	+3"	% GRAVEL	% SAND	% SILT	% CLAY	USCS	AASHTO	PL	LL
○	0.0	19.7	67.0	13.3		SM	A-2-4(0)	NP	NV
□	0.0	22.8	55.3	21.9		SM	A-2-4(0)	NP	NV
△	0.0	1.3	96.2	2.5		SP			

SIEVE inches size	PERCENT FINER ○	□	△
1	100.0	100.0	
.75	94.4	91.9	
.5	88.8	89.6	
.375	86.7	84.7	100.0
	GRAIN SIZE		
D_{60}	0.4953	0.6755	0.3467
D_{30}	0.2242	0.1652	0.2494
D_{10}			0.1691
	COEFFICIENTS		
C_c			1.06
C_u			2.05

SIEVE number size	PERCENT FINER ○	□	△
#4	80.3	77.2	98.7
#10	73.3	69.3	96.3
#20	68.0	62.7	92.0
#40	55.5	51.6	76.6
#60	33.9	37.9	30.2
#140	15.3	24.8	3.4
#200	13.3	21.9	2.5

Material Description

○ silty sand with gravel

□ silty sand with gravel

△ poorly graded sand

REMARKS:

○

□

△

○ Depth: 8.3-8.8 Sample Number: V1 S4

□ Depth: 10-10.5 Sample Number: V1 S5

△ Depth: 6.3-6.8 Sample Number: V3 S3

Phoenix Soil Research

Kingston, WA

Client: Richard Martin Groundwater LLC

Project: Miller Walker Stormwater RMC032

Project No.: PSR14-30-1016

Figure 1